ELECTRIC CIRCUITS I
DIRECT CURRENT

Tony R. Kuphaldt
Bellingham Technical College

LibreTexts™

Book: I Direct Current (DC)

This text is disseminated via the Open Education Resource (OER) LibreTexts Project (https://LibreTexts.org) and like the thousands of other texts available within this powerful platform, it is freely available for reading, printing, and "consuming."

The LibreTexts mission is to bring together students, faculty, and scholars in a collaborative effort to provide an accessible, and comprehensive platform that empowers our community to develop, curate, adapt, and adopt openly licensed resources and technologies; through these efforts we can reduce the financial burden born from traditional educational resource costs, ensuring education is more accessible for students and communities worldwide.

Most, but not all, pages in the library have licenses that may allow individuals to make changes, save, and print this book. Carefully consult the applicable license(s) before pursuing such effects. Instructors can adopt existing LibreTexts texts or Remix them to quickly build course-specific resources to meet the needs of their students. Unlike traditional textbooks, LibreTexts' web based origins allow powerful integration of advanced features and new technologies to support learning.

LibreTexts is the adaptable, user-friendly non-profit open education resource platform that educators trust for creating, customizing, and sharing accessible, interactive textbooks, adaptive homework, and ancillary materials. We collaborate with individuals and organizations to champion open education initiatives, support institutional publishing programs, drive curriculum development projects, and more.

The LibreTexts libraries are Powered by NICE CXone Expert and was supported by the Department of Education Open Textbook Pilot Project, the California Education Learning Lab, the UC Davis Office of the Provost, the UC Davis Library, the California State University Affordable Learning Solutions Program, and Merlot. This material is based upon work supported by the National Science Foundation under Grant No. 1246120, 1525057, and 1413739.

Any opinions, findings, and conclusions or recommendations expressed in this material are those of the author(s) and do not necessarily reflect the views of the National Science Foundation nor the US Department of Education.

Have questions or comments? For information about adoptions or adaptions contact info@LibreTexts.org or visit our main website at https://LibreTexts.org.

This text was compiled on 04/21/2026

TABLE OF CONTENTS

Licensing

1: Basic Concepts of Electricity

- 1.1: Static Electricity
- 1.2: Conductors, Insulators, and Electron Flow
- 1.3: What Are Electric Circuits?
- 1.4: Voltage and Current
- 1.5: Resistance
- 1.6: Voltage and Current in a Practical Circuit
- 1.7: Conventional Versus Electron Flow

2: Ohm's Law

- 2.1: Ohm’s Law - How Voltage, Current, and Resistance Relate
- 2.2: An Analogy for Ohm’s Law
- 2.3: Power in Electric Circuits
- 2.4: Calculating Electric Power
- 2.5: Resistors
- 2.6: Nonlinear Conduction
- 2.7: Circuit Wiring
- 2.8: Polarity of voltage drops
- 2.9: Computer Simulation of Electric Circuits

3: Electrical Safety

- 3.1: The Importance of Electrical Safety
- 3.2: Physiological Effects of Electricity
- 3.3: Shock Current Path
- 3.4: Ohm’s Law (again)
- 3.5: Safe Practices
- 3.6: Emergency Response
- 3.7: Common Sources of Hazard
- 3.8: Safe Circuit Design
- 3.9: Safe Meter Usage
- 3.10: Electric Shock Data

4: Scientific Notation And Metric Prefixes

- 4.1: Scientific Notation
- 4.2: Arithmetic with Scientific Notation
- 4.3: Metric Notation
- 4.4: Metric Prefix Conversions
- 4.5: Hand Calculator Use
- 4.6: Scientific Notation in SPICE

5: Series And Parallel Circuits

- 5.1: What are “Series” and “Parallel” Circuits?
- 5.2: Simple Series Circuits
- 5.3: Simple Parallel Circuits
- 5.4: Conductance
- 5.5: Power Calculations
- 5.6: Correct use of Ohm’s Law
- 5.7: Component Failure Analysis
- 5.8: Building Simple Resistor Circuits

6: Divider Circuits and Kirchhoff's Laws

- 6.1: Voltage Divider Circuits
- 6.2: Kirchhoff’s Voltage Law (KVL)
- 6.3: Current Divider Circuits and the Current Divider Formula
- 6.4: Kirchhoff’s Current Law (KCL)

7: Series-parallel Combination Circuits

- 7.1: What is a Series-Parallel Circuit?
- 7.2: Analysis Techniques for Series Parallel Resistor Circuits
- 7.3: Re-drawing Complex Schematics
- 7.4: Component Failure Analysis (Continued)
- 7.5: Building Series-Parallel Resistor Circuits

8: DC Metering Circuits

- 8.1: What is a Meter?
- 8.2: Voltmeter Design
- 8.3: Voltmeter Impact on Measured Circuit
- 8.4: Ammeter Design
- 8.5: Ammeter Impact on Measured Circuit
- 8.6: Ohmmeter Design
- 8.7: High Voltage Ohmmeters
- 8.8: Multimeters
- 8.9: Kelvin (4-wire) Resistance Measurement
- 8.10: Bridge Circuits
- 8.11: Wattmeter Design
- 8.12: Creating Custom Calibration Resistances

9: Electrical Instrumentation Signals

- 9.1: Analog and Digital Signals
- 9.2: Voltage Signal Systems
- 9.3: Current Signal Systems
- 9.4: Tachogenerators
- 9.5: Thermocouples
- 9.6: pH Measurement
- 9.7: Strain Gauges

10: DC Network Analysis

- 10.1: What is Network Analysis?
- 10.2: Branch Current Method
- 10.3: Mesh Current Method and Analysis
- 10.4: Node Voltage Method
- 10.5: Introduction to Network Theorems
- 10.6: Millman's Theorem
- 10.7: Superposition Theorem
- 10.8: Thevenin's Theorem
- 10.9: Norton's Theorem
- 10.10: Thevenin-Norton Equivalencies
- 10.11: Millman's Theorem Revisited
- 10.12: Maximum Power Transfer Theorem
- 10.13: Δ-Y and Y-Δ Conversions

11: Batteries And Power Systems

- 11.1: Electron Activity in Chemical Reactions
- 11.2: Battery Construction
- 11.3: Battery Ratings
- 11.4: Special-purpose Batteries
- 11.5: Practical Considerations - Batteries

12: Physics of Conductors and Insulators

- 12.1: 12.1 Introduction to Conductance and Conductors
- 12.2: Conductor Size
- 12.3: Conductor Ampacity
- 12.4: Fuses
- 12.5: Specific Resistance
- 12.6: Temperature Coefficient of Resistance
- 12.7: Superconductivity
- 12.8: Insulator Breakdown Voltage

13: Capacitors

- 13.1: Electric Fields and Capacitance
- 13.2: Capacitors and Calculus
- 13.3: Factors Affecting Capacitance
- 13.4: Series and Parallel Capacitors
- 13.5: Practical Considerations - Capacitors

14: Magnetism and Electromagnetism

- 14.1: Permanent Magnets
- 14.2: Electromagnetism
- 14.3: Magnetic Units of Measurement
- 14.4: Permeability and Saturation
- 14.5: Electromagnetic Induction
- 14.6: Mutual Inductance

15: Inductors

- 15.1: Magnetic Fields and Inductance
- 15.2: Inductors and Calculus
- 15.3: Factors Affecting Inductance
- 15.4: Series and Parallel Inductors
- 15.5: Practical Considerations - Inductors

16: RC and L

- 16: RC and L/R Time Constants
  - 16.1: Electrical Transients
  - 16.2: Capacitor Transient Response
  - 16.3: Inductor Transient Response
  - 16.4: Voltage and Current Calculations
  - 16.05: Why L
    - 16.5: Why L/R and not LR?
  - 16.6: Complex Voltage and Current Calculations
  - 16.7: Complex Circuits
  - 16.8: Solving for Unknown Time

Index

Credits

Index

Glossary

Detailed Licensing

Licensing

A detailed breakdown of this resource's licensing can be found in ***Back Matter/Detailed Licensing****.*

CHAPTER OVERVIEW

1: Basic Concepts of Electricity

1.1: Static Electricity
1.2: Conductors, Insulators, and Electron Flow
1.3: What Are Electric Circuits?
1.4: Voltage and Current
1.5: Resistance
1.6: Voltage and Current in a Practical Circuit
1.7: Conventional Versus Electron Flow

This page titled 1: Basic Concepts of Electricity is shared under a GNU Free Documentation License 1.3 license and was authored, remixed, and/or curated by Tony R. Kuphaldt (All About Circuits) via source content that was edited to the style and standards of the LibreTexts platform.

1.1: Static Electricity

It was discovered centuries ago that certain types of materials would mysteriously attract one another after being rubbed together. For example: after rubbing a piece of silk against a piece of glass, the silk and glass would tend to stick together. Indeed, there was an attractive force that could be demonstrated even when the two materials were separated:

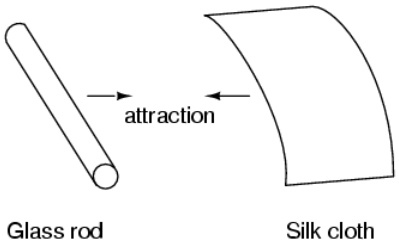

Glass and silk aren't the only materials known to behave like this. Anyone who has ever brushed up against a latex balloon only to find that it tries to stick to them has experienced this same phenomenon. Paraffin wax and wool cloth are another pair of materials early experimenters recognized as manifesting attractive forces after being rubbed together:

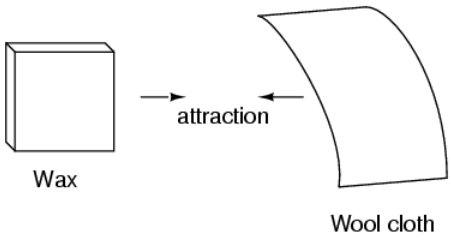

This phenomenon became even more interesting when it was discovered that identical materials, after having been rubbed with their respective cloths, always repelled each other:

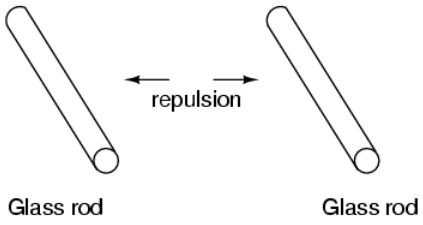

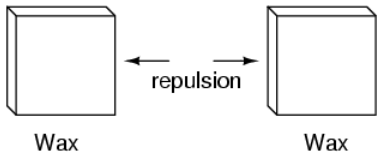

It was also noted that when a piece of glass rubbed with silk was exposed to a piece of wax rubbed with wool, the two materials would attract one another:

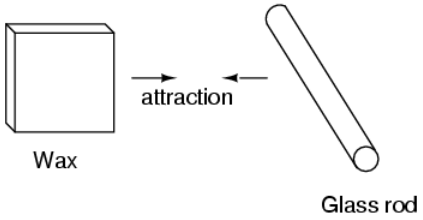

Furthermore, it was found that any material demonstrating properties of attraction or repulsion after being rubbed could be classed into one of two distinct categories: attracted to glass and repelled by wax, or repelled by glass and attracted to wax. It was either one or the other: there were no materials found that would be attracted to or repelled by both glass and wax, or that reacted to one without reacting to the other.

More attention was directed toward the pieces of cloth used to do the rubbing. It was discovered that after rubbing two pieces of glass with two pieces of silk cloth, not only did the glass pieces repel each other, but so did the cloths. The same phenomenon held for the pieces of wool used to rub the wax:

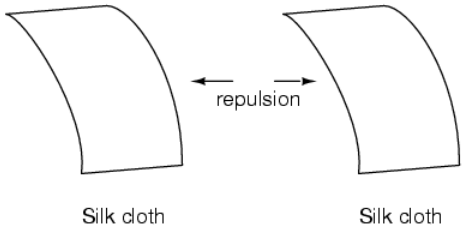

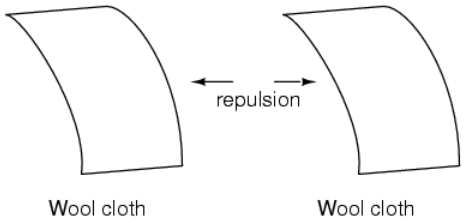

Now, this was really strange to witness. After all, none of these objects were visibly altered by the rubbing, yet they definitely behaved differently than before they were rubbed. Whatever change took place to make these materials attract or repel one another was invisible.

Some experimenters speculated that invisible "fluids" were being transferred from one object to another during the process of rubbing, and that these "fluids" were able to effect a physical force over a distance. Charles Dufay was one of the early experimenters who demonstrated that there were definitely two different types of changes wrought by rubbing certain pairs of objects together. The fact that there was more than one type of change manifested in these materials was evident by the fact that there were two types of forces produced: *attraction* and *repulsion*. The hypothetical fluid transfer became known as a *charge*.

One pioneering researcher, Benjamin Franklin, came to the conclusion that there was only one fluid exchanged between rubbed objects, and that the two different "charges" were nothing more than either an excess or a deficiency of that one fluid. After experimenting with wax and wool, Franklin suggested that the coarse wool removed some of this invisible fluid from the smooth wax, causing an excess of fluid on the wool and a deficiency of fluid on the wax. The resulting disparity in fluid content between the wool and wax would then cause an attractive force, as the fluid tried to regain its former balance between the two materials.

Postulating the existence of a single "fluid" that was either gained or lost through rubbing accounted best for the observed behavior: that all these materials fell neatly into one of two categories when rubbed, and most importantly, that the two active materials rubbed against each other *always fell into opposing categories* as evidenced by their invariable attraction to one another. In other words, there was never a time where two materials rubbed against each other *both* became either positive or negative.

Following Franklin's speculation of the wool rubbing something off of the wax, the type of charge that was associated with rubbed wax became known as "negative" (because it was supposed to have a deficiency of fluid) while the type of charge associated with the rubbing wool became known as "positive" (because it was supposed to have an excess of fluid). Little did he know that his innocent conjecture would cause much confusion for students of electricity in the future!

Precise measurements of electrical charge were carried out by the French physicist Charles Coulomb in the 1780's using a device called a *torsional balance* measuring the force generated between two electrically charged objects. The results of Coulomb's work led to the development of a unit of electrical charge named in his honor, the *coulomb*. If two "point" objects (hypothetical objects

having no appreciable surface area) were equally charged to a measure of 1 coulomb, and placed 1 meter (approximately 1 yard) apart, they would generate a force of about 9 billion newtons (approximately 2 billion pounds), either attracting or repelling depending on the types of charges involved. The operational definition of a coulomb as the unit of electrical charge (in terms of force generated between point charges) was found to be equal to an excess or deficiency of about 6,250,000,000,000,000,000 electrons. Or, stated in reverse terms, one electron has a charge of about 0.00000000000000000016 coulombs. Being that one electron is the smallest known carrier of electric charge, this last figure of charge for the electron is defined as the *elementary charge*.

It was discovered much later that this "fluid" was actually composed of extremely small bits of matter called *electrons*, so named in honor of the ancient Greek word for amber: another material exhibiting charged properties when rubbed with cloth. Experimentation has since revealed that all objects are composed of extremely small "building-blocks" known as *atoms*, and that these atoms are in turn composed of smaller components known as *particles*. The three fundamental particles comprising most atoms are called *protons*, *neutrons* and *electrons*. Whilst the majority of atoms have a combination of protons, neutrons, and electrons, not all atoms have neutrons; an example is the protium isotope ($_1H^1$) of hydrogen (Hydrogen-1) which is the lightest and most common form of hydrogen which only has one proton and one electron. Atoms are far too small to be seen, but if we could look at one, it might appear something like this:

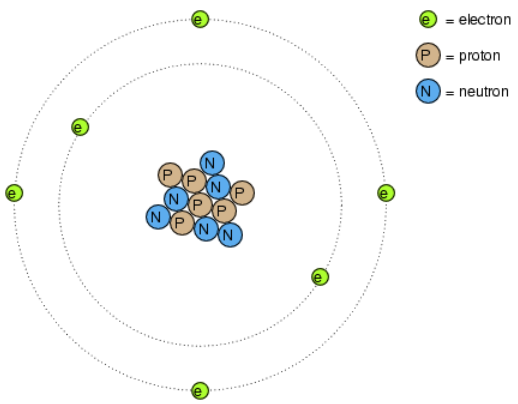

Even though each atom in a piece of material tends to hold together as a unit, there's actually a lot of empty space between the electrons and the cluster of protons and neutrons residing in the middle.

This crude model is that of the element carbon, with six protons, six neutrons, and six electrons. In any atom, the protons and neutrons are very tightly bound together, which is an important quality. The tightly-bound clump of protons and neutrons in the center of the atom is called the *nucleus*, and the number of protons in an atom's nucleus determines its elemental identity: change the number of protons in an atom's nucleus, and you change the type of atom that it is. In fact, if you could remove three protons from the nucleus of an atom of lead, you will have achieved the old alchemists' dream of producing an atom of gold! The tight binding of protons in the nucleus is responsible for the stable identity of chemical elements, and the failure of alchemists to achieve their dream.

Neutrons are much less influential on the chemical character and identity of an atom than protons, although they are just as hard to add to or remove from the nucleus, being so tightly bound. If neutrons are added or gained, the atom will still retain the same chemical identity, but its mass will change slightly and it may acquire strange *nuclear* properties such as radioactivity.

However, electrons have significantly more freedom to move around in an atom than either protons or neutrons. In fact, they can be knocked out of their respective positions (even leaving the atom entirely!) by far less energy than what it takes to dislodge particles in the nucleus. If this happens, the atom still retains its chemical identity, but an important imbalance occurs. Electrons and protons are unique in the fact that they are attracted to one another over a distance. It is this attraction over distance which causes the attraction between rubbed objects, where electrons are moved away from their original atoms to reside around atoms of another object.

Electrons tend to repel other electrons over a distance, as do protons with other protons. The only reason protons bind together in the nucleus of an atom is because of a much stronger force called the *strong nuclear force* which has effect only under very short

distances. Because of this attraction/repulsion behavior between individual particles, electrons and protons are said to have opposite electric charges. That is, each electron has a negative charge, and each proton a positive charge. In equal numbers within an atom, they counteract each other's presence so that the net charge within the atom is zero. This is why the picture of a carbon atom had six electrons: to balance out the electric charge of the six protons in the nucleus. If electrons leave or extra electrons arrive, the atom's net electric charge will be imbalanced, leaving the atom "charged" as a whole, causing it to interact with charged particles and other charged atoms nearby. Neutrons are neither attracted to or repelled by electrons, protons, or even other neutrons, and are consequently categorized as having no charge at all.

The process of electrons arriving or leaving is exactly what happens when certain combinations of materials are rubbed together: electrons from the atoms of one material are forced by the rubbing to leave their respective atoms and transfer over to the atoms of the other material. In other words, electrons comprise the "fluid" hypothesized by Benjamin Franklin.

The result of an imbalance of this "fluid" (electrons) between objects is called *static electricity*. It is called "static" because the displaced electrons tend to remain stationary after being moved from one insulating material to another. In the case of wax and wool, it was determined through further experimentation that electrons in the wool actually transferred to the atoms in the wax, which is exactly opposite of Franklin's conjecture! In honor of Franklin's designation of the wax's charge being "negative" and the wool's charge being "positive," electrons are said to have a "negative" charging influence. Thus, an object whose atoms have received a surplus of electrons is said to be *negatively* charged, while an object whose atoms are lacking electrons is said to be *positively* charged, as confusing as these designations may seem. By the time the true nature of electric "fluid" was discovered, Franklin's nomenclature of electric charge was too well established to be easily changed, and so it remains to this day.

Michael Faraday proved (1832) that static electricity was the same as that produced by a battery or a generator. Static electricity is, for the most part, a nuisance. Black powder and smokeless powder have graphite added to prevent ignition due to static electricity. It causes damage to sensitive semiconductor circuitry. While it is possible to produce motors powered by high voltage and low current characteristic of static electricity, this is not economic. The few practical applications of static electricity include xerographic printing, the electrostatic air filter, and the high voltage Van de Graaff generator.

Review

- All materials are made up of tiny "building blocks" known as *atoms*.
- All naturally occurring atoms contain particles called *electrons*, *protons*, and *neutrons*, with the exception of the protium isotope ($_1H^1$) of hydrogen.
- Electrons have a negative (-) electric charge.
- Protons have a positive (+) electric charge.
- Neutrons have no electric charge.
- Electrons can be dislodged from atoms much easier than protons or neutrons.
- The number of protons in an atom's nucleus determines its identity as a unique element.

This page titled 1.1: Static Electricity is shared under a GNU Free Documentation License 1.3 license and was authored, remixed, and/or curated by Tony R. Kuphaldt (All About Circuits) via source content that was edited to the style and standards of the LibreTexts platform.

1.2: Conductors, Insulators, and Electron Flow

Conductors vs Insulators

In other types of materials such as glass, the atoms' electrons have very little freedom to move around. While external forces such as physical rubbing can force some of these electrons to leave their respective atoms and transfer to the atoms of another material, they do not move between atoms within that material very easily.

This relative mobility of electrons within a material is known as electric *conductivity*. Conductivity is determined by the types of atoms in a material (the number of protons in each atom's nucleus, determining its chemical identity) and how the atoms are linked together with one another. Materials with high electron mobility (many free electrons) are called *conductors*, while materials with low electron mobility (few or no free electrons) are called *insulators*.

Here are a few common examples of conductors and insulators:

Conductors	Insulators
silver	glass
copper	rubber
gold	oil
aluminum	asphalt
iron	fiberglass
steel	porcelain
brass	ceramic
bronze	quartz
mercury	(dry) cotton
graphite	(dry) paper
dirty water	(dry) wood
concrete	plastic
	air
	diamond
	pure water

It must be understood that not all conductive materials have the same level of conductivity, and not all insulators are equally resistant to electron motion. Electrical conductivity is analogous to the transparency of certain materials to light: materials that easily "conduct" light are called "transparent," while those that don't are called "opaque." However, not all transparent materials are equally conductive to light. Window glass is better than most plastics, and certainly better than "clear" fiberglass. So it is with electrical conductors, some being better than others.

For instance, silver is the best conductor in the "conductors" list, offering easier passage for electrons than any other material cited. Dirty water and concrete are also listed as conductors, but these materials are substantially less conductive than any metal.

It should also be understood that some materials experience changes in their electrical properties under different conditions. Glass, for instance, is a very good insulator at room temperature but becomes a conductor when heated to a very high temperature. Gases such as air, normally insulating materials, also become conductive if heated to very high temperatures. Most metals become poorer conductors when heated, and better conductors when cooled. Many conductive materials become perfectly conductive (this is called *superconductivity*) at extremely low temperatures.

Electron Flow / Electric Current

While the normal motion of "free" electrons in a conductor is random, with no particular direction or speed, electrons can be influenced to move in a coordinated fashion through a conductive material. This uniform motion of electrons is what we call *electricity* or *electric current*. To be more precise, it could be called *dynamic* electricity in contrast to *static* electricity, which is an unmoving accumulation of electric charge. Just like water flowing through the emptiness of a pipe, electrons are able to move within the empty space within and between the atoms of a conductor. The conductor may appear to be solid to our eyes, but any material composed of atoms is mostly empty space! The liquid-flow analogy is so fitting that the motion of electrons through a conductor is often referred to as a "flow."

A noteworthy observation may be made here. As each electron moves uniformly through a conductor, it pushes on the one ahead of it, such that all the electrons move together as a group. The starting and stopping of electron flow through the length of a conductive path is virtually instantaneous from one end of a conductor to the other, even though the motion of each electron may be very slow. An approximate analogy is that of a tube filled end-to-end with marbles:

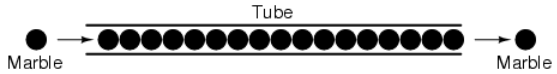

The tube is full of marbles, just as a conductor is full of free electrons ready to be moved by an outside influence. If a single marble is suddenly inserted into this full tube on the left-hand side, another marble will immediately try to exit the tube on the right. Even though each marble only traveled a short distance, the transfer of motion through the tube is virtually instantaneous from the left end to the right end, no matter how long the tube is. With electricity, the overall effect from one end of a conductor to the other happens at the speed of light: a swift 186,000 miles per second!!! Each individual electron, though, travels through the conductor at a *much* slower pace

Electron Flow Through Wire

If we want electrons to flow in a certain direction to a certain place, we must provide the proper path for them to move, just as a plumber must install piping to get water to flow where he or she wants it to flow. To facilitate this, *wires* are made of highly conductive metals such as copper or aluminum in a wide variety of sizes.

Remember that electrons can flow only when they have the opportunity to move in the space between the atoms of a material. This means that there can be electric current *only* where there exists a continuous path of conductive material providing a conduit for electrons to travel through. In the marble analogy, marbles can flow into the left-hand side of the tube (and, consequently, through the tube) if and only if the tube is open on the right-hand side for marbles to flow out. If the tube is blocked on the right-hand side, the marbles will just “pile up” inside the tube, and marble “flow” will not occur. The same holds true for electric current: the continuous flow of electrons requires there be an unbroken path to permit that flow. Let’s look at a diagram to illustrate how this works:

A thin, solid line (as shown above) is the conventional symbol for a continuous piece of wire. Since the wire is made of a conductive material, such as copper, its constituent atoms have many free electrons which can easily move through the wire. However, there will never be a continuous or uniform flow of electrons within this wire unless they have a place to come from and a place to go. Let’s add a hypothetical electron “Source” and “Destination:”

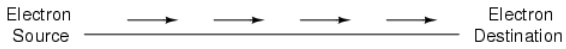

Now, with the Electron Source pushing new electrons into the wire on the left-hand side, electron flow through the wire can occur (as indicated by the arrows pointing from left to right). However, the flow will be interrupted if the conductive path formed by the wire is broken:

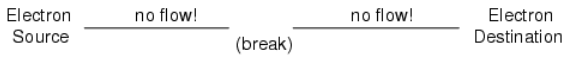

Electrical Continuity

Since air is an insulating material, and an air gap separates the two pieces of wire, the once-continuous path has now been broken, and electrons cannot flow from Source to Destination. This is like cutting a water pipe in two and capping off the broken ends of the pipe: water can’t flow if there’s no exit out of the pipe. In electrical terms, we had a condition of electrical *continuity* when the wire was in one piece, and now that continuity is broken with the wire cut and separated.

If we were to take another piece of wire leading to the Destination and simply make physical contact with the wire leading to the Source, we would once again have a continuous path for electrons to flow. The two dots in the diagram indicate physical (metal-to-metal) contact between the wire pieces:

Now, we have continuity from the Source, to the newly-made connection, down, to the right, and up to the Destination. This is analogous to putting a “tee” fitting in one of the capped-off pipes and directing water through a new segment of pipe to its destination. Please take note that the broken segment of wire on the right-hand side has no electrons flowing through it, because it is no longer part of a complete path from Source to Destination.

It is interesting to note that no “wear” occurs within wires due to this electric current, unlike water-carrying pipes which are eventually corroded and worn by prolonged flows. Electrons do encounter some degree of friction as they move, however, and this friction can generate heat in a conductor. This is a topic we’ll explore in much greater detail later.

Review

- In *conductive* materials, the outer electrons in each atom can easily come or go, and are called *free electrons*.
- In *insulating* materials, the outer electrons are not so free to move.
- All metals are electrically conductive.
- *Dynamic electricity*, or *electric current*, is the uniform motion of electrons through a conductor.
- *Static electricity* is unmoving (if on an insulator), accumulated charge formed by either an excess or deficiency of electrons in an object. It is typically formed by charge separation by contact and separation of dissimilar materials.
- For electrons to flow continuously (indefinitely) through a conductor, there must be a complete, unbroken path for them to move both into and out of that conductor.

This page titled 1.2: Conductors, Insulators, and Electron Flow is shared under a GNU Free Documentation License 1.3 license and was authored, remixed, and/or curated by Tony R. Kuphaldt (All About Circuits) via source content that was edited to the style and standards of the LibreTexts platform.

1.3: What Are Electric Circuits?

What Is a Circuit?

The answer to this paradox is found in the concept of a *circuit*: a never-ending looped pathway for electrons. If we take a wire, or many wires, joined end-to-end, and loop it around so that it forms a continuous pathway, we have the means to support a uniform flow of electrons without having to resort to infinite Sources and Destinations:

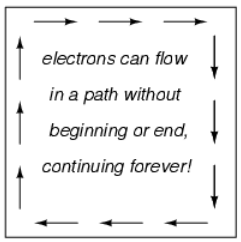

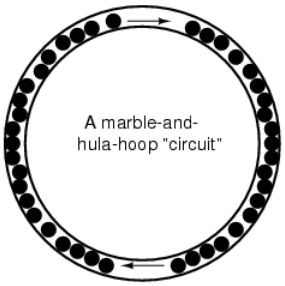

Each electron advancing clockwise in this circuit pushes on the one in front of it, which pushes on the one in front of it, and so on, and so on, just like a hula-hoop filled with marbles.

Now, we have the capability of supporting a continuous flow of electrons indefinitely without the need for infinite electron supplies and dumps. All we need to maintain this flow is a continuous means of motivation for those electrons, which we'll address in the next section of this chapter on voltage and current.

What Does It Mean When a Circuit Is Broken?

Continuity is just as important in a circuit as it is in a straight piece of wire. Just as in the example with the straight piece of wire between the electron Source and Destination, any break in this circuit will prevent electrons from flowing through it:

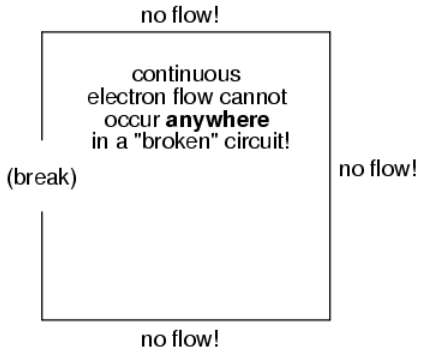

An important principle to realize here is that *it doesn't matter where the break occurs*. Any discontinuity in the circuit will prevent electron flow throughout the entire circuit. Unless there is a continuous, unbroken loop of conductive material for electrons to flow through, a sustained flow simply cannot be maintained.

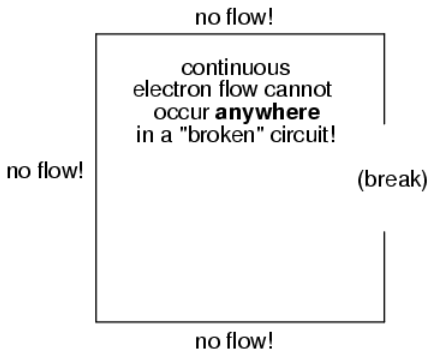

Review

- A *circuit* is an unbroken loop of conductive material that allows electrons to flow through continuously without beginning or end.
- If a circuit is “broken,” that means its conductive elements no longer form a complete path, and continuous electron flow cannot occur in it.
- The location of a break in a circuit is irrelevant to its inability to sustain continuous electron flow. *Any*break, *anywhere* in a circuit prevents electron flow throughout the circuit.

This page titled 1.3: What Are Electric Circuits? is shared under a GNU Free Documentation License 1.3 license and was authored, remixed, and/or curated by Tony R. Kuphaldt (All About Circuits) via source content that was edited to the style and standards of the LibreTexts platform.

1.4: Voltage and Current

If we take the examples of wax and wool which have been rubbed together, we find that the surplus of electrons in the wax (negative charge) and the deficit of electrons in the wool (positive charge) creates an imbalance of charge between them. This imbalance manifests itself as an attractive force between the two objects:

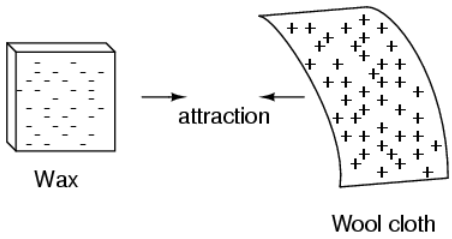

If a conductive wire is placed between the charged wax and wool, electrons will flow through it, as some of the excess electrons in the wax rush through the wire to get back to the wool, filling the deficiency of electrons there:

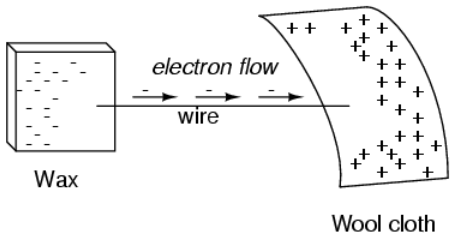

The imbalance of electrons between the atoms in the wax and the atoms in the wool creates a force between the two materials. With no path for electrons to flow from the wax to the wool, all this force can do is attract the two objects together. Now that a conductor bridges the insulating gap, however, the force will provoke electrons to flow in a uniform direction through the wire, if only momentarily, until the charge in that area neutralizes and the force between the wax and wool diminishes.

The electric charge formed between these two materials by rubbing them together serves to store a certain amount of energy. This energy is not unlike the energy stored in a high reservoir of water that has been pumped from a lower-level pond:

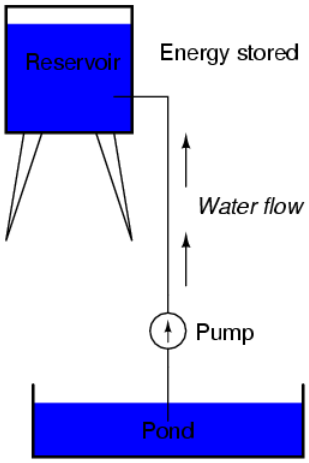

The influence of gravity on the water in the reservoir creates a force that attempts to move the water down to the lower level again. If a suitable pipe is run from the reservoir back to the pond, water will flow under the influence of gravity down from the reservoir, through the pipe:

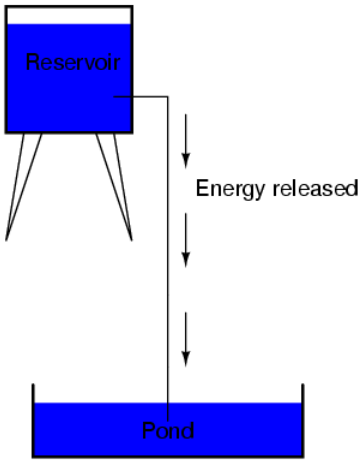

It takes energy to pump that water from the low-level pond to the high-level reservoir, and the movement of water through the piping back down to its original level constitutes a releasing of energy stored from previous pumping.

If the water is pumped to an even higher level, it will take even more energy to do so, thus more energy will be stored, and more energy released if the water is allowed to flow through a pipe back down again:

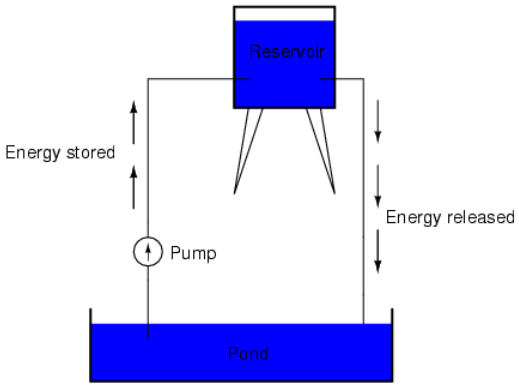

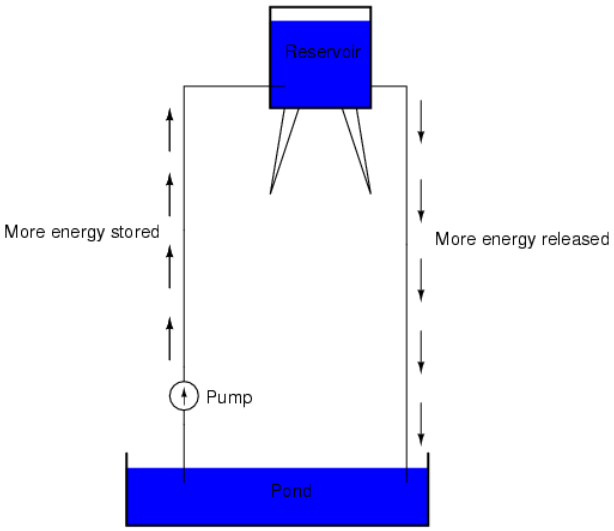

Electrons are not much different. If we rub wax and wool together, we “pump” electrons away from their normal “levels,” creating a condition where a force exists between the wax and wool, as the electrons seek to re-establish their former positions (and balance

within their respective atoms). The force attracting electrons back to their original positions around the positive nuclei of their atoms is analogous to the force gravity exerts on water in the reservoir, trying to draw it down to its former level.

Just as the pumping of water to a higher level results in energy being stored, “pumping” electrons to create an electric charge imbalance results in a certain amount of energy being stored in that imbalance. And, just as providing a way for water to flow back down from the heights of the reservoir results in a release of that stored energy, providing a way for electrons to flow back to their original “levels” results in a release of stored energy.

When the electrons are poised in that static condition (just like water sitting still, high in a reservoir), the energy stored there is called *potential energy*, because it has the possibility (potential) of release that has not been fully realized yet. When you scuff your rubber-soled shoes against a fabric carpet on a dry day, you create an imbalance of electric charge between yourself and the carpet. The action of scuffing your feet stores energy in the form of an imbalance of electrons forced from their original locations. This charge (static electricity) is stationary, and you won’t realize that energy is being stored at all. However, once you place your hand against a metal doorknob (with lots of electron mobility to neutralize your electric charge), that stored energy will be released in the form of a sudden flow of electrons through your hand, and you will perceive it as an electric shock!

This potential energy, stored in the form of an electric charge imbalance and capable of provoking electrons to flow through a conductor, can be expressed as a term called *voltage*, which technically is a measure of potential energy per unit charge of electrons, or something a physicist would call *specific potential energy*. Defined in the context of static electricity, voltage is the measure of work required to move a unit charge from one location to another, against the force which tries to keep electric charges balanced. In the context of electrical power sources, voltage is the amount of potential energy available (work to be done) per unit charge, to move electrons through a conductor.

Because voltage is an expression of potential energy, representing the possibility or potential for energy release as the electrons move from one “level” to another, it is always referenced between two points. Consider the water reservoir analogy:

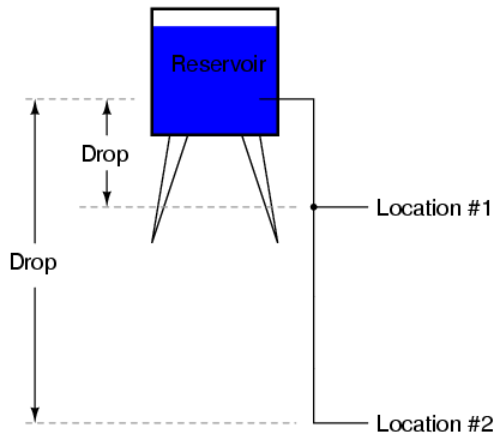

Because of the difference in the height of the drop, there’s potential for much more energy to be released from the reservoir through the piping to location 2 than to location 1. The principle can be intuitively understood in dropping a rock: which results in a more violent impact, a rock dropped from a height of one foot, or the same rock dropped from a height of one mile? Obviously, the drop of greater height results in greater energy released (a more violent impact). We cannot assess the amount of stored energy in a water reservoir simply by measuring the volume of water any more than we can predict the severity of a falling rock’s impact simply from knowing the weight of the rock: in both cases we must also consider how *far*these masses will drop from their initial height. The amount of energy released by allowing a mass to drop is relative to the distance *between* its starting and ending points. Likewise, the potential energy available for moving electrons from one point to another is relative to those two points. Therefore, voltage is always expressed as a quantity *between* two points. Interestingly enough, the analogy of a mass potentially “dropping” from one height to another is such an apt model that voltage between two points is sometimes called a *voltage drop*.

Voltage can be generated by means other than rubbing certain types of materials against each other. Chemical reactions, radiant energy, and the influence of magnetism on conductors are a few ways in which voltage may be produced. Respective examples of these three sources of voltage are batteries, solar cells, and generators (such as the “alternator” unit under the hood of your

automobile). For now, we won't go into detail as to how each of these voltage sources works—more important is that we understand how voltage sources can be applied to create electron flow in a circuit.

Let's take the symbol for a chemical battery and build a circuit step by step:

Any source of voltage, including batteries, have two points for electrical contact. In this case, we have point 1 and point 2 in the above diagram. The horizontal lines of varying length indicate that this is a battery, and they further indicate the direction which this battery's voltage will try to push electrons through a circuit. The fact that the horizontal lines in the battery symbol appear separated (and thus unable to serve as a path for electrons to move) is no cause for concern: in real life, those horizontal lines represent metallic plates immersed in a liquid or semi-solid material that not only conducts electrons, but also generates the voltage to push them along by interacting with the plates.

Notice the little "+" and "-" signs to the immediate left of the battery symbol. The negative (-) end of the battery is always the end with the shortest dash, and the positive (+) end of the battery is always the end with the longest dash. Since we have decided to call electrons "negatively" charged (thanks, Ben!), the negative end of a battery is that end which tries to push electrons out of it. Likewise, the positive end is that end which tries to attract electrons.

With the "+" and "-" ends of the battery not connected to anything, there will be voltage between those two points, but there will be no flow of electrons through the battery, because there is no continuous path for the electrons to move.

The same principle holds true for the water reservoir and pump analogy: without a return pipe back to the pond, stored energy in the reservoir cannot be released in the form of water flow. Once the reservoir is completely filled up, no flow can occur, no matter how much pressure the pump may generate. There needs to be a complete path (circuit) for water to flow from the pond, to the reservoir, and back to the pond in order for continuous flow to occur.

We can provide such a path for the battery by connecting a piece of wire from one end of the battery to the other. Forming a circuit with a loop of wire, we will initiate a continuous flow of electrons in a clockwise direction:

So long as the battery continues to produce voltage and the continuity of the electrical path isn't broken, electrons will continue to flow in the circuit. Following the metaphor of water moving through a pipe, this continuous, uniform flow of electrons through the circuit is called a *current*. So long as the voltage source keeps "pushing" in the same direction, the electron flow will continue to move in the same direction in the circuit. This single-direction flow of electrons is called a *Direct Current*, or DC. In the second volume of this book series, electric circuits are explored where the direction of current switches back and forth: *Alternating Current*, or AC. But for now, we'll just concern ourselves with DC circuits.

Because electric current is composed of individual electrons flowing in unison through a conductor by moving along and pushing on the electrons ahead, just like marbles through a tube or water through a pipe, the amount of flow throughout a single circuit will be the same at any point. If we were to monitor a cross-section of the wire in a single circuit, counting the electrons flowing by, we would notice the exact same quantity per unit of time as in any other part of the circuit, regardless of conductor length or conductor diameter.

If we break the circuit's continuity *at any point*, the electric current will cease in the entire loop, and the full voltage produced by the battery will be manifested across the break, between the wire ends that used to be connected:

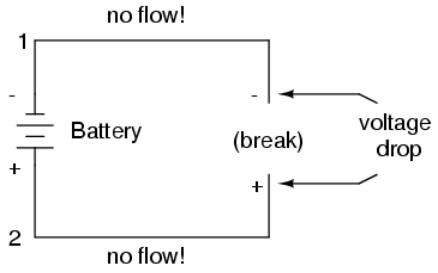

Notice the “+” and “-” signs drawn at the ends of the break in the circuit, and how they correspond to the “+” and “-” signs next to the battery’s terminals. These markers indicate the direction that the voltage attempts to push electron flow, that potential direction commonly referred to as *polarity*. Remember that voltage is always relative between two points. Because of this fact, the polarity of a voltage drop is also relative between two points: whether a point in a circuit gets labeled with a “+” or a “-” depends on the other point to which it is referenced. Take a look at the following circuit, where each corner of the loop is marked with a number for reference:

With the circuit’s continuity broken between points 2 and 3, the polarity of the voltage dropped between points 2 and 3 is “-” for point 2 and “+” for point 3. The battery’s polarity (1 “-” and 4 “+”) is trying to push electrons through the loop clockwise from 1 to 2 to 3 to 4 and back to 1 again.

Now let’s see what happens if we connect points 2 and 3 back together again, but place a break in the circuit between points 3 and 4:

With the break between 3 and 4, the polarity of the voltage drop between those two points is “+” for 4 and “-” for 3. Take special note of the fact that point 3’s “sign” is opposite of that in the first example, where the break was between points 2 and 3 (where point 3 was labeled “+”). It is impossible for us to say that point 3 in this circuit will always be either “+” or “-”, because polarity, like voltage itself, is not specific to a single point, but is always relative between two points!

Review

- Electrons can be motivated to flow through a conductor by the same force manifested in static electricity.
- *Voltage* is the measure of specific potential energy (potential energy per unit charge) between two locations. In layman’s terms, it is the measure of “push” available to motivate electrons.
- Voltage, as an expression of potential energy, is always relative between two locations, or points. Sometimes it is called a voltage “drop.”
- When a voltage source is connected to a circuit, the voltage will cause a uniform flow of electrons through that circuit called a *current*.
- In a single (one loop) circuit, the amount of current at any point is the same as the amount of current at any other point.
- If a circuit containing a voltage source is broken, the full voltage of that source will appear across the points of the break.
- The +/- orientation of a voltage drop is called the *polarity*. It is also relative between two points.

This page titled 1.4: Voltage and Current is shared under a GNU Free Documentation License 1.3 license and was authored, remixed, and/or curated by Tony R. Kuphaldt (All About Circuits) via source content that was edited to the style and standards of the LibreTexts platform.

1.5: Resistance

The Electron Flow through Filament of the Lamp

One practical and popular use of electric current is for the operation of electric lighting. The simplest form of electric lamp is a tiny metal "filament" inside of a clear glass bulb, which glows white-hot ("incandesces") with heat energy when sufficient electric current passes through it. Like the battery, it has two conductive connection points, one for electrons to enter and the other for electrons to exit.

Connected to a source of voltage, an electric lamp circuit looks something like this:

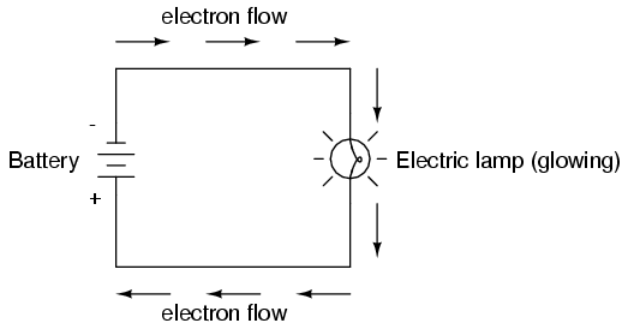

As the electrons work their way through the thin metal filament of the lamp, they encounter more opposition to motion than they typically would in a thick piece of wire. This opposition to electric current depends on the type of material, its cross-sectional area, and its temperature. It is technically known as *resistance*. (It can be said that conductors have low resistance and insulators have very high resistance.) This resistance serves to limit the amount of current through the circuit with a given amount of voltage supplied by the battery, as compared with the "short circuit" where we had nothing but a wire joining one end of the voltage source (battery) to the other.

When electrons move against the opposition of resistance, "friction" is generated. Just like mechanical friction, the friction produced by electrons flowing against a resistance manifests itself in the form of heat. The concentrated resistance of a lamp's filament results in a relatively large amount of heat energy dissipated at that filament. This heat energy is enough to cause the filament to glow white-hot, producing light, whereas the wires connecting the lamp to the battery (which have much lower resistance) hardly even get warm while conducting the same amount of current.

As in the case of the short circuit, if the continuity of the circuit is broken at any point, electron flow stops throughout the entire circuit. With a lamp in place, this means that it will stop glowing:

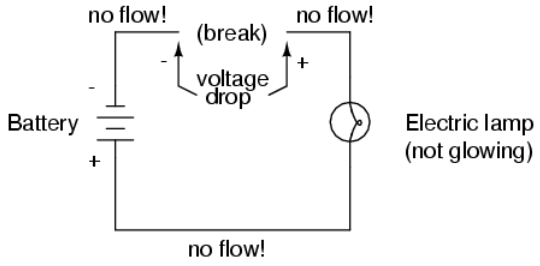

As before, with no flow of electrons, the entire potential (voltage) of the battery is available across the break, waiting for the opportunity of a connection to bridge across that break and permit electron flow again. This condition is known as an *open circuit*, where a break in the continuity of the circuit prevents current throughout. All it takes is a single break in continuity to "open" a circuit. Once any breaks have been connected once again and the continuity of the circuit re-established, it is known as a *closed circuit*.

The Basis for Switching Lamps

What we see here is the basis for switching lamps on and off by remote switches. Because any break in a circuit's continuity results in current stopping throughout the entire circuit, we can use a device designed to intentionally break that continuity (called a *switch*), mounted at any convenient location that we can run wires to, to control the flow of electrons in the circuit:

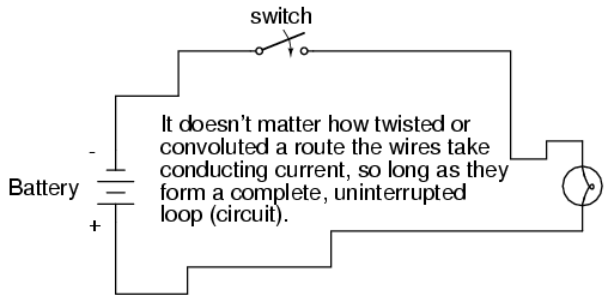

This is how a switch mounted on the wall of a house can control a lamp that is mounted down a long hallway, or even in another room, far away from the switch. The switch itself is constructed of a pair of conductive contacts (usually made of some kind of metal) forced together by a mechanical lever actuator or pushbutton. When the contacts touch each other, electrons are able to flow from one to the other and the circuit's continuity is established; when the contacts are separated, electron flow from one to the other is prevented by the insulation of the air between, and the circuit's continuity is broken.

The Knife Switch

Perhaps the best kind of switch to show for illustration of the basic principle is the "knife" switch:

A knife switch is nothing more than a conductive lever, free to pivot on a hinge, coming into physical contact with one or more stationary contact points which are also conductive. The switch shown in the above illustration is constructed on a porcelain base (an excellent insulating material), using copper (an excellent conductor) for the "blade" and contact points. The handle is plastic to insulate the operator's hand from the conductive blade of the switch when opening or closing it.

Here is another type of knife switch, with two stationary contacts instead of one:

The particular knife switch shown here has one “blade” but two stationary contacts, meaning that it can make or break more than one circuit. For now this is not terribly important to be aware of, just the basic concept of what a switch is and how it works.

Knife switches are great for illustrating the basic principle of how a switch works, but they present distinct safety problems when used in high-power electric circuits. The exposed conductors in a knife switch make accidental contact with the circuit a distinct possibility, and any sparking that may occur between the moving blade and the stationary contact is free to ignite any nearby flammable materials. Most modern switch designs have their moving conductors and contact points sealed inside an insulating case in order to mitigate these hazards. A photograph of a few modern switch types show how the switching mechanisms are much more concealed than with the knife design:

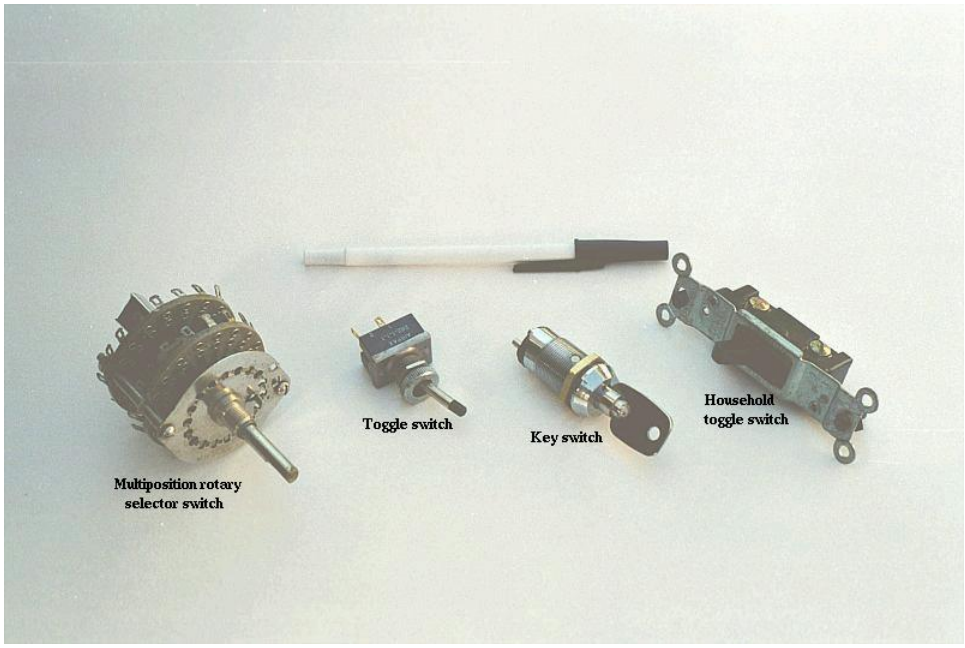

Opened and Closed Circuits

In keeping with the “open” and “closed” terminology of circuits, a switch that is making contact from one connection terminal to the other (example: a knife switch with the blade fully touching the stationary contact point) provides continuity for electrons to flow through, and is called a *closed* switch. Conversely, a switch that is breaking continuity (example: a knife switch with the blade *not* touching the stationary contact point) won’t allow electrons to pass through and is called an *open* switch. This terminology is often confusing to the new student of electronics, because the words “open” and “closed” are commonly understood in the context of a door, where “open” is equated with free passage and “closed” with blockage. With electrical switches, these terms have opposite meaning: “open” means no flow while “closed” means free passage of electrons.

Review

- *Resistance* is the measure of opposition to electric current.
- A *short circuit* is an electric circuit offering little or no resistance to the flow of electrons. Short circuits are dangerous with high voltage power sources because the high currents encountered can cause large amounts of heat energy to be released.
- An *open circuit* is one where the continuity has been broken by an interruption in the path for electrons to flow.
- A *closed circuit* is one that is complete, with good continuity throughout.
- A device designed to open or close a circuit under controlled conditions is called a *switch*.
- The terms *"open"* and *"closed"* refer to switches as well as entire circuits. An open switch is one without continuity: electrons cannot flow through it. A closed switch is one that provides a direct (low resistance) path for electrons to flow through.

This page titled 1.5: Resistance is shared under a GNU Free Documentation License 1.3 license and was authored, remixed, and/or curated by Tony R. Kuphaldt (All About Circuits) via source content that was edited to the style and standards of the LibreTexts platform.

1.6: Voltage and Current in a Practical Circuit

Because it takes energy to force electrons to flow against the opposition of a resistance, there will be voltage manifested (or "dropped") between any points in a circuit with resistance between them. It is important to note that although the amount of current (the quantity of electrons moving past a given point every second) is uniform in a simple circuit, the amount of voltage (potential energy per unit charge) between different sets of points in a single circuit may vary considerably:

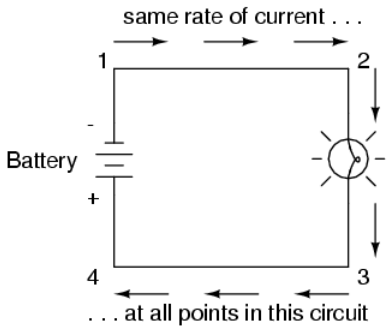

Take this circuit as an example. If we label four points in this circuit with the numbers 1, 2, 3, and 4, we will find that the amount of current conducted through the wire between points 1 and 2 is exactly the same as the amount of current conducted through the lamp (between points 2 and 3). This same quantity of current passes through the wire between points 3 and 4, and through the battery (between points 1 and 4).

However, we will find the voltage appearing between any two of these points to be directly proportional to the resistance within the conductive path between those two points, given that the amount of current along any part of the circuit's path is the same (which, for this simple circuit, it is). In a normal lamp circuit, the resistance of a lamp will be much greater than the resistance of the connecting wires, so we should expect to see a substantial amount of voltage between points 2 and 3, with very little between points 1 and 2, or between 3 and 4. The voltage between points 1 and 4, of course, will be the full amount of "force" offered by the battery, which will be only slightly greater than the voltage across the lamp (between points 2 and 3).

This, again, is analogous to the water reservoir system:

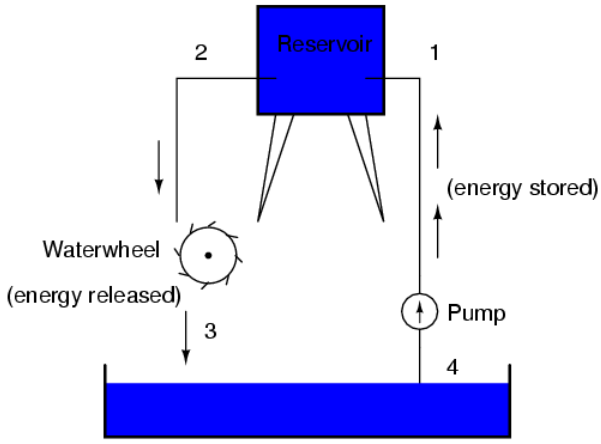

Between points 2 and 3, where the falling water is releasing energy at the water-wheel, there is a difference of pressure between the two points, reflecting the opposition to the flow of water through the water-wheel. From point 1 to point 2, or from point 3 to point 4, where water is flowing freely through reservoirs with little opposition, there is little or no difference of pressure (no potential energy). However, the rate of water flow in this continuous system is the same everywhere (assuming the water levels in both pond and reservoir are unchanging): through the pump, through the water-wheel, and through all the pipes. So it is with simple electric circuits: the rate of electron flow is the same at every point in the circuit, although voltages may differ between different sets of points.

This page titled 1.6: Voltage and Current in a Practical Circuit is shared under a GNU Free Documentation License 1.3 license and was authored, remixed, and/or curated by Tony R. Kuphaldt (All About Circuits) via source content that was edited to the style and standards of the LibreTexts platform.

1.7: Conventional Versus Electron Flow

Positive and Negative Electron Charge

When Benjamin Franklin made his conjecture regarding the direction of charge flow (from the smooth wax to the rough wool), he set a precedent for electrical notation that exists to this day, despite the fact that we know electrons are the constituent units of charge, and that they are displaced from the wool to the wax—not from the wax to the wool—when those two substances are rubbed together. This is why electrons are said to have a *negative* charge: because Franklin assumed electric charge moved in the opposite direction that it actually does, and so objects he called "negative" (representing a deficiency of charge) actually have a surplus of electrons.

By the time the true direction of electron flow was discovered, the nomenclature of "positive" and "negative" had already been so well established in the scientific community that no effort was made to change it, although calling electrons "positive" would make more sense in referring to "excess" charge. You see, the terms "positive" and "negative" are human inventions, and as such have no absolute meaning beyond our own conventions of language and scientific description. Franklin could have just as easily referred to a surplus of charge as "black" and a deficiency as "white," in which case scientists would speak of electrons having a "white" charge (assuming the same incorrect conjecture of charge position between wax and wool).

Conventional Flow Notation

However, because we tend to associate the word "positive" with "surplus" and "negative" with "deficiency," the standard label for electron charge does seem backward. Because of this, many engineers decided to retain the old concept of electricity with "positive" referring to a surplus of charge, and label charge flow (current) accordingly. This became known as *conventional flow* notation:

Conventional flow notation

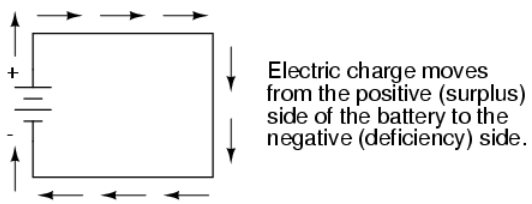

Electron Flow Notation

Others chose to designate charge flow according to the actual motion of electrons in a circuit. This form of symbology became known as *electron flow* notation:

Electron flow notation

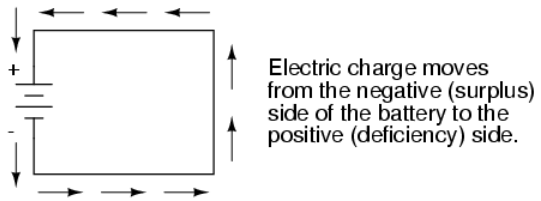

In conventional flow notation, we show the motion of charge according to the (technically incorrect) labels of + and -. This way the labels make sense, but the direction of charge flow is incorrect. In electron flow notation, we follow the actual motion of electrons in the circuit, but the + and - labels seem backward. Does it matter, really, how we designate charge flow in a circuit? Not really, so long as we're consistent in the use of our symbols. You may follow an imagined direction of current (conventional flow) or the actual (electron flow) with equal success insofar as circuit analysis is concerned. Concepts of voltage, current, resistance, continuity, and even mathematical treatments such as Ohm's Law (chapter 2) and Kirchhoff's Laws (chapter 6) remain just as valid with either style of notation.

Conventional Flow Notation vs Electron Flow Notation

You will find conventional flow notation followed by most electrical engineers, and illustrated in most engineering textbooks. Electron flow is most often seen in introductory textbooks (this one included) and in the writings of professional scientists, especially solid-state physicists who are concerned with the actual motion of electrons in substances. These preferences are cultural, in the sense that certain groups of people have found it advantageous to envision electric current motion in certain ways. Being that most analyses of electric circuits do not depend on a technically accurate depiction of charge flow, the choice between conventional flow notation and electron flow notation is arbitrary . . . almost.

Polarization and Nonpolarization

Many electrical devices tolerate real currents of either direction with no difference in operation. Incandescent lamps (the type utilizing a thin metal filament that glows white-hot with sufficient current), for example, produce light with equal efficiency regardless of current direction. They even function well on alternating current (AC), where the direction changes rapidly over time. Conductors and switches operate irrespective of current direction, as well. The technical term for this irrelevance of charge flow is *nonpolarization*. We could say then, that incandescent lamps, switches, and wires are *nonpolarized* components. Conversely, any device that functions differently on currents of different direction would be called a *polarized* device.

There are many such polarized devices used in electric circuits. Most of them are made of so-called *semiconductor* substances, and as such aren't examined in detail until the third volume of this book series. Like switches, lamps, and batteries, each of these devices is represented in a schematic diagram by a unique symbol. As one might guess, polarized device symbols typically contain an arrow within them, somewhere, to designate a preferred or exclusive direction of current. This is where the competing notations of conventional and electron flow really matter. Because engineers from long ago have settled on conventional flow as their "culture's" standard notation, and because engineers are the same people who invent electrical devices and the symbols representing them, the arrows used in these devices' symbols *all point in the direction of conventional flow, not electron flow*. That is to say, all of these devices' symbols have arrow marks that point *against* the actual flow of electrons through them.

Perhaps the best example of a polarized device is the *diode*. A diode is a one-way "valve" for electric current, analogous to a *check valve* for those familiar with plumbing and hydraulic systems. Ideally, a diode provides unimpeded flow for current in one direction (little or no resistance), but prevents flow in the other direction (infinite resistance). Its schematic symbol looks like this:

Diode

Placed within a battery/lamp circuit, its operation is as such:

Diode operation

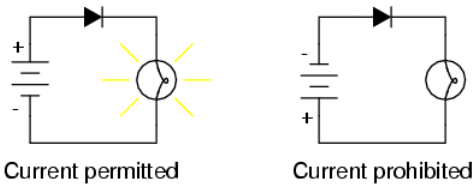

When the diode is facing in the proper direction to permit current, the lamp glows. Otherwise, the diode blocks all electron flow just like a break in the circuit, and the lamp will not glow.

If we label the circuit current using conventional flow notation, the arrow symbol of the diode makes perfect sense: the triangular arrowhead points in the direction of charge flow, from positive to negative:

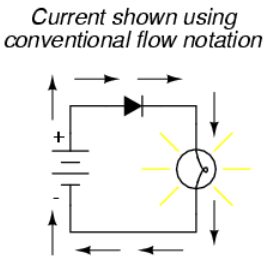

On the other hand, if we use electron flow notation to show the *true* direction of electron travel around the circuit, the diode's arrow symbology seems backward:

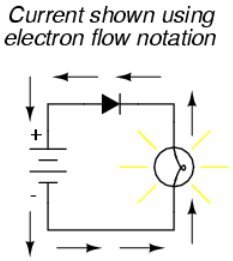

For this reason alone, many people choose to make conventional flow their notation of choice when drawing the direction of charge motion in a circuit. If for no other reason, the symbols associated with semiconductor components like diodes make more sense this way. However, others choose to show the true direction of electron travel so as to avoid having to tell themselves, "just remember the electrons are *actually* moving the other way" whenever the true direction of electron motion becomes an issue.

Which One Should You Use?

In this series of textbooks, I have committed to using electron flow notation. Ironically, this was not my first choice. I found it much easier when I was first learning electronics to use conventional flow notation, primarily because of the directions of semiconductor device symbol arrows. Later, when I began my first formal training in electronics, my instructor insisted on using electron flow notation in his lectures. In fact, he asked that we take our textbooks (which were illustrated using conventional flow notation) and use our pens to change the directions of all the current arrows so as to point the "correct" way! His preference was not arbitrary, though. In his 20-year career as a U.S. Navy electronics technician, he worked on a lot of vacuum-tube equipment. Before the advent of semiconductor components like transistors, devices known as *vacuum tubes* or *electron tubes* were used to amplify small electrical signals. These devices work on the phenomenon of electrons hurtling through a vacuum, their rate of flow controlled by voltages applied between metal plates and grids placed within their path, and are best understood when visualized using electron flow notation.

When I graduated from that training program, I went back to my old habit of conventional flow notation, primarily for the sake of minimizing confusion with component symbols, since vacuum tubes are all but obsolete except in special applications. Collecting notes for the writing of this book, I had full intention of illustrating it using conventional flow.

Years later, when I became a teacher of electronics, the curriculum for the program I was going to teach had already been established around the notation of electron flow. Oddly enough, this was due in part to the legacy of my first electronics instructor (the 20-year Navy veteran), but that's another story entirely! Not wanting to confuse students by teaching "differently" from the other instructors, I had to overcome my habit and get used to visualizing electron flow instead of conventional. Because I wanted my book to be a useful resource for my students, I begrudgingly changed plans and illustrated it with all the arrows pointing the "correct" way. Oh well, sometimes you just can't win!

On a positive note (no pun intended), I have subsequently discovered that some students prefer electron flow notation when first learning about the behavior of semiconductive substances. Also, the habit of visualizing electrons flowing *against* the arrows of polarized device symbols isn't that difficult to learn, and in the end I've found that I can follow the operation of a circuit equally well using either mode of notation. Still, I sometimes wonder if it would all be much easier if we went back to the source of the confusion—Ben Franklin's errant conjecture—and fixed the problem there, calling electrons "positive" and protons "negative."

This page titled 1.7: Conventional Versus Electron Flow is shared under a GNU Free Documentation License 1.3 license and was authored, remixed, and/or curated by Tony R. Kuphaldt (All About Circuits) via source content that was edited to the style and standards of the LibreTexts platform.

CHAPTER OVERVIEW

2: Ohm's Law

2.1: Ohm’s Law - How Voltage, Current, and Resistance Relate
2.2: An Analogy for Ohm’s Law
2.3: Power in Electric Circuits
2.4: Calculating Electric Power
2.5: Resistors
2.6: Nonlinear Conduction
2.7: Circuit Wiring
2.8: Polarity of voltage drops
2.9: Computer Simulation of Electric Circuits

This page titled 2: Ohm's Law is shared under a GNU Free Documentation License 1.3 license and was authored, remixed, and/or curated by Tony R. Kuphaldt (All About Circuits) via source content that was edited to the style and standards of the LibreTexts platform.

2.1: Ohm's Law - How Voltage, Current, and Resistance Relate

Voltage, Current, and Resistance

An electric circuit is formed when a conductive path is created to allow free electrons to continuously move. This continuous movement of free electrons through the conductors of a circuit is called a *current*, and it is often referred to in terms of "flow," just like the flow of a liquid through a hollow pipe.

The force motivating electrons to "flow" in a circuit is called *voltage*. Voltage is a specific measure of potential energy that is always relative between two points. When we speak of a certain amount of voltage being present in a circuit, we are referring to the measurement of how much *potential* energy exists to move electrons from one particular point in that circuit to another particular point. Without reference to *two particular* points, the term "voltage" has no meaning.

Free electrons tend to move through conductors with some degree of friction, or opposition to motion. This opposition to motion is more properly called *resistance*. The amount of current in a circuit depends on the amount of voltage available to motivate the electrons, and also the amount of resistance in the circuit to oppose electron flow. Just like voltage, resistance is a quantity relative between two points. For this reason, the quantities of voltage and resistance are often stated as being "between" or "across" two points in a circuit.

Units of Measurement: Volt, Amp, and Ohm

To be able to make meaningful statements about these quantities in circuits, we need to be able to describe their quantities in the same way that we might quantify mass, temperature, volume, length, or any other kind of physical quantity. For mass, we might use the units of "kilogram" or "gram." For temperature, we might use degrees Fahrenheit or degrees Celsius. Here are the standard units of measurement for electrical current, voltage, and resistance:

Quantity	Symbol	Unit of Measurement	Unit Abbreviation
Current	I	Ampere ("Amp")	A
Voltage	E *or* V	Volt	V
Resistance	R	Ohm	Ω

The "symbol" given for each quantity is the standard alphabetical letter used to represent that quantity in an algebraic equation. Standardized letters like these are common in the disciplines of physics and engineering, and are internationally recognized. The "unit abbreviation" for each quantity represents the alphabetical symbol used as a shorthand notation for its particular unit of measurement. And, yes, that strange-looking "horseshoe" symbol is the capital Greek letter Ω, just a character in a *foreign* alphabet (apologies to any Greek readers here).

Each unit of measurement is named after a famous experimenter in electricity: The *amp* after the Frenchman Andre M. Ampere, the *volt* after the Italian Alessandro Volta, and the *ohm* after the German Georg Simon Ohm.

The mathematical symbol for each quantity is meaningful as well. The "R" for resistance and the "V" for voltage are both self-explanatory, whereas "I" for current seems a bit weird. The "I" is thought to have been meant to represent "Intensity" (of electron flow), and the other symbol for voltage, "E," stands for "Electromotive force." From what research I've been able to do, there seems to be some dispute over the meaning of "I." The symbols "E" and "V" are interchangeable for the most part, although some texts reserve "E" to represent voltage across a source (such as a battery or generator) and "V" to represent voltage across anything else.

All of these symbols are expressed using capital letters, except in cases where a quantity (especially voltage or current) is described in terms of a brief period of time (called an "instantaneous" value). For example, the voltage of a battery, which is stable over a long period of time, will be symbolized with a capital letter "E," while the voltage peak of a lightning strike at the very instant it hits a power line would most likely be symbolized with a lower-case letter "e" (or lower-case "v") to designate that value as being at a single moment in time. This same lower-case convention holds true for current as well, the lower-case letter "i" representing current at some instant in time. Most direct-current (DC) measurements, however, being stable over time, will be symbolized with capital letters.

Coulomb and Electric Charge

One foundational unit of electrical measurement, often taught at the beginning of electronics courses but used infrequently afterwards, is the unit of the *coulomb*, which is a measure of electric charge proportional to the number of electrons in an imbalanced state. One coulomb of charge is equal to 6,250,000,000,000,000,000 electrons. The symbol for electric charge quantity is the capital letter "Q," with the unit of coulombs abbreviated by the capital letter "C." It so happens that the unit for electron flow, the amp, is equal to 1 coulomb of electrons passing by a given point in a circuit in 1 second of time. Cast in these terms, current is the *rate of electric charge motion* through a conductor.

As stated before, voltage is the measure of *potential energy per unit charge* available to motivate electrons from one point to another. Before we can precisely define what a "volt" is, we must understand how to measure this quantity we call "potential energy." The general metric unit for energy of any kind is the *joule*, equal to the amount of work performed by a force of 1 newton exerted through a motion of 1 meter (in the same direction). In British units, this is slightly less than 3/4 pound of force exerted over a distance of 1 foot. Put in common terms, it takes about 1 joule of energy to lift a 3/4 pound weight 1 foot off the ground, or to drag something a distance of 1 foot using a parallel pulling force of 3/4 pound. Defined in these scientific terms, 1 volt is equal to 1 joule of electric potential energy per (divided by) 1 coulomb of charge. Thus, a 9 volt battery releases 9 joules of energy for every coulomb of electrons moved through a circuit.

These units and symbols for electrical quantities will become very important to know as we begin to explore the relationships between them in circuits.

The Ohm's Law Equation

Ohm's principal discovery was that the amount of electric current through a metal conductor in a circuit is directly proportional to the voltage impressed across it, for any given temperature. Ohm expressed his discovery in the form of a simple equation, describing how voltage, current, and resistance interrelate:

$$E = I R$$

In this algebraic expression, voltage (E) is equal to current (I) multiplied by resistance (R). Using algebra techniques, we can manipulate this equation into two variations, solving for I and for R, respectively:

$$I = \frac{E}{R} \qquad R = \frac{E}{I}$$

Analyzing Simple Circuits with Ohm's Law

Let's see how these equations might work to help us analyze simple circuits:

In the above circuit, there is only one source of voltage (the battery, on the left) and only one source of resistance to current (the lamp, on the right). This makes it very easy to apply Ohm's Law. If we know the values of any two of the three quantities (voltage, current, and resistance) in this circuit, we can use Ohm's Law to determine the third.

In this first example, we will calculate the amount of current (I) in a circuit, given values of voltage (E) and resistance (R):

What is the amount of current (I) in this circuit?

n this second example, we will calculate the amount of resistance (R) in a circuit, given values of voltage (E) and current (I):

What is the amount of resistance (R) offered by the lamp?

In the last example, we will calculate the amount of voltage supplied by a battery, given values of current (I) and resistance (R):

What is the amount of voltage provided by the battery?

Ohm's Law is a very simple and useful tool for analyzing electric circuits. It is used so often in the study of electricity and electronics that it needs to be committed to memory by the serious student. For those who are not yet comfortable with algebra, there's a trick to remembering how to solve for any one quantity, given the other two. First, arrange the letters E, I, and R in a triangle like this:

If you know E and I, and wish to determine R, just eliminate R from the picture and see what's left:

If you know E and R, and wish to determine I, eliminate I and see what's left:

Lastly, if you know I and R, and wish to determine E, eliminate E and see what's left:

Eventually, you'll have to be familiar with algebra to seriously study electricity and electronics, but this tip can make your first calculations a little easier to remember. If you are comfortable with algebra, all you need to do is commit E=IR to memory and derive the other two formulae from that when you need them!

Review

- Voltage is measured in *volts*, symbolized by the letters "E" or "V".
- Current is measured in *amps*, symbolized by the letter "I" or "Ω".
- Resistance is measured in *ohms*, symbolized by the letter "R" or "A".
- Ohm's Law: E = IR ; I = E/R ; R = E/I

This page titled 2.1: Ohm's Law - How Voltage, Current, and Resistance Relate is shared under a GNU Free Documentation License 1.3 license and was authored, remixed, and/or curated by Tony R. Kuphaldt (All About Circuits) via source content that was edited to the style and standards of the LibreTexts platform.

2.2: An Analogy for Ohm's Law

Ohm's Law also makes intuitive sense if you apply it to the water-and-pipe analogy. If we have a water pump that exerts pressure (voltage) to push water around a "circuit" (current) through a restriction (resistance), we can model how the three variables interrelate. If the resistance to water flow stays the same and the pump pressure increases, the flow rate must also increase.

Pressure	= increase	**Voltage**	= increase
Flow rate	= increase	**Current**	= increase
Resistance	= same	**Resistance**	= same

$$\overset{\uparrow}{E} = \overset{\uparrow}{I}\ R$$

If the pressure stays the same and the resistance increases (making it more difficult for the water to flow), then the flow rate must decrease:

Pressure	= same	**Voltage**	= same
Flow rate	= decrease	**Current**	= decrease
Resistance	= increase	**Resistance**	= increase

$$E = I\ \overset{\uparrow}{R}$$

If the flow rate were to stay the same while the resistance to flow decreased, the required pressure from the pump would necessarily decrease:

Pressure	= decrease	**Voltage**	= decrease
Flow rate	= same	**Current**	= same
Resistance	= decrease	**Resistance**	= decrease

$$\underset{\downarrow}{E} = I\ \underset{\downarrow}{R}$$

As odd as it may seem, the actual mathematical relationship between pressure, flow, and resistance is actually more complex for fluids like water than it is for electrons. If you pursue further studies in physics, you will discover this for yourself. Thankfully for the electronics student, the mathematics of Ohm's Law is very straightforward and simple.

Review

- With resistance steady, current follows voltage (an increase in voltage means an increase in current, and vice versa).
- With voltage steady, changes in current and resistance are opposite (an increase in current means a decrease in resistance, and vice versa).
- With current steady, voltage follows resistance (an increase in resistance means an increase in voltage).

This page titled 2.2: An Analogy for Ohm's Law is shared under a GNU Free Documentation License 1.3 license and was authored, remixed, and/or curated by Tony R. Kuphaldt (All About Circuits) via source content that was edited to the style and standards of the LibreTexts platform.

2.3: Power in Electric Circuits

In addition to voltage and current, there is another measure of free electron activity in a circuit: *power*. First, we need to understand just what power is before we analyze it in any circuits.

Power is a measure of how much work can be performed in a given amount of time. *Work* is generally defined in terms of the lifting of a weight against the pull of gravity. The heavier the weight and/or the higher it is lifted, the more work has been done. *Power* is a measure of how rapidly a standard amount of work is done.

For American automobiles, engine power is rated in a unit called “horsepower,” invented initially as a way for steam engine manufacturers to quantify the working ability of their machines in terms of the most common power source of their day: horses. One horsepower is defined in British units as 550 ft-lbs of work per second of time. The power of a car’s engine won’t indicate how tall of a hill it can climb or how much weight it can tow, but it will indicate how *fast* it can climb a specific hill or tow a specific weight.

The power of a mechanical engine is a function of both the engine’s speed and its torque provided at the output shaft. Speed of an engine’s output shaft is measured in revolutions per minute, or RPM. Torque is the amount of twisting force produced by the engine, and it is usually measured in pound-feet, or lb-ft (not to be confused with foot-pounds or ft-lbs, which is the unit for work). Neither speed nor torque alone is a measure of an engine’s power.

A 100 horsepower diesel tractor engine will turn relatively slowly, but provide great amounts of torque. A 100 horsepower motorcycle engine will turn very fast, but provide relatively little torque. Both will produce 100 horsepower, but at different speeds and different torques. The equation for shaft horsepower is simple:

$$\text{Horsepower} = \frac{2\pi ST}{33,000} \tag{2.3.1}$$

where S is the shaft speed in rpm and T is the shaft torque in lb-ft.

Notice how there are only two variable terms on the right-hand side of the equation, S and T. All the other terms on that side are constant: 2, pi, and 33,000 are all constants (they do not change in value). The horsepower varies only with changes in speed and torque, nothing else. We can re-write the equation to show this relationship:

$$\text{Horsepower} \propto ST \tag{2.3.2}$$

where $\propto$ means "proportional to".

Because the unit of the “horsepower” doesn’t coincide exactly with speed in revolutions per minute multiplied by torque in pound-feet, we can’t say that horsepower *equals* ST. However, they are *proportional*to one another. As the mathematical product of ST changes, the value for horsepower will change by the same proportion.

In electric circuits, power is a function of both voltage and current. Not surprisingly, this relationship bears striking resemblance to the “proportional” horsepower formula above:

$$P = IE \tag{2.3.3}$$

In this case, however, power (P) is exactly equal to current (I) multiplied by voltage (E), rather than merely being proportional to IE. When using this formula, the unit of measurement for power is the *watt*, abbreviated with the letter “W.”

It must be understood that neither voltage nor current by themselves constitute power. Rather, power is the combination of both voltage *and* current in a circuit. Remember that voltage is the specific work (or potential energy) per unit charge, while current is the rate at which electric charges move through a conductor. Voltage (specific work) is analogous to the work done in lifting a weight against the pull of gravity. Current (rate) is analogous to the speed at which that weight is lifted. Together as a product (multiplication), voltage (work) and current (rate) constitute power.

Just as in the case of the diesel tractor engine and the motorcycle engine, a circuit with high voltage and low current may be dissipating the same amount of power as a circuit with low voltage and high current. Neither the amount of voltage alone nor the amount of current alone indicates the amount of power in an electric circuit.

In an open circuit, where voltage is present between the terminals of the source and there is zero current, there is *zero* power dissipated, no matter how great that voltage may be. Since P=IE and I=0 and anything multiplied by zero is zero, the power

dissipated in any open circuit must be zero. Likewise, if we were to have a short circuit constructed of a loop of superconducting wire (absolutely zero resistance), we could have a condition of current in the loop with zero voltage, and likewise no power would be dissipated. Since P=IE and E=0 and anything multiplied by zero is zero, the power dissipated in a superconducting loop must be zero. (We'll be exploring the topic of superconductivity in a later chapter).

Whether we measure power in the unit of "horsepower" or the unit of "watt," we're still talking about the same thing: how much work can be done in a given amount of time. The two units are not numerically equal, but they express the same kind of thing. In fact, European automobile manufacturers typically advertise their engine power in terms of kilowatts (kW), or thousands of watts, instead of horsepower! These two units of power are related to each other by a simple conversion formula:

$$1 \text{ Horsepower} = 745.7 \text{ Watts}$$

So, our 100 horsepower diesel and motorcycle engines could also be rated as "74570 watt" engines, or more properly, as "74.57 kilowatt" engines. In European engineering specifications, this rating would be the norm rather than the exception.

Review

- Power is the measure of how much work can be done in a given amount of time.
- Mechanical power is commonly measured (in America) in "horsepower."
- Electrical power is almost always measured in "watts," and it can be calculated by the formula P = IE.
- Electrical power is a product of both voltage *and* current, not either one separately.
- Horsepower and watts are merely two different units for describing the same kind of physical measurement, with 1 horsepower equaling 745.7 watts.

This page titled 2.3: Power in Electric Circuits is shared under a GNU Free Documentation License 1.3 license and was authored, remixed, and/or curated by Tony R. Kuphaldt (All About Circuits) via source content that was edited to the style and standards of the LibreTexts platform.

2.4: Calculating Electric Power

Learn the Power Formula

We've seen the formula for determining the power in an electric circuit — by multiplying the voltage in "volts" by the current in "amps" we arrive at an answer in "watts." Let's apply this to a circuit example:

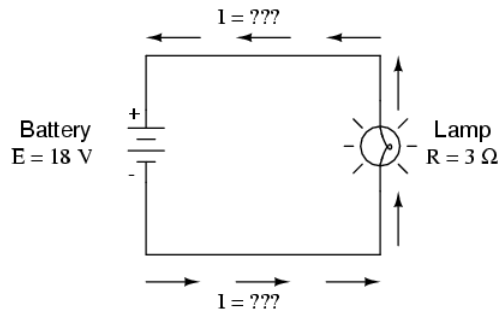

How to Use Ohm's Law to Determine Current

In the above circuit, we know we have a battery voltage of 18 volts and a lamp resistance of 3 Ω. Using Ohm's Law to determine current, we get:

$$I = \frac{E}{R} = \frac{18\text{V}}{3\Omega} = 6\text{A} \tag{2.4.1}$$

Now that we know the current, we can take that value and multiply it by the voltage to determine power:

$$P = IE = (6\text{A})(18\text{V}) = 108\text{W} \tag{2.4.2}$$

This tells us that the lamp is dissipating (releasing) 108 watts of power, most likely in the form of both light and heat.

Increasing the Battery Voltage

Let's try taking that same circuit and increasing the battery voltage to see what happens. Intuition should tell us that the circuit current will increase as the voltage increases and the lamp resistance stays the same. Likewise, the power will increase as well:

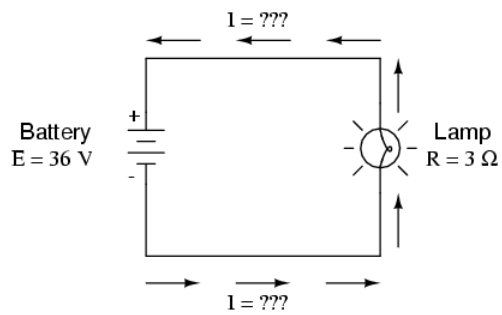

Now, the battery voltage is 36 volts instead of 18 volts. The lamp is still providing 3 Ω of electrical resistance to the flow of electrons. The current is now:

$$I = \frac{E}{R} = \frac{36\text{V}}{3\Omega} = 12\text{A} \tag{2.4.3}$$

This stands to reason: if I = E/R, and we double E while R stays the same, the current should double. Indeed, it has: we now have 12 amps of current instead of 6. Now, what about power?

$$P = IE = (12\text{A})(36\text{V}) = 432W \tag{2.4.4}$$

What does Increasing Battery do to Power?

Notice that the power has increased just as we might have suspected, but it increased quite a bit more than the current. Why is this? Because power is a function of voltage multiplied by current, and *both* voltage and current doubled from their previous values, the power will increase by a factor of 2 x 2, or 4. You can check this by dividing 432 watts by 108 watts and seeing that the ratio between them is indeed 4.

Using algebra again to manipulate the formulae, we can take our original power formula and modify it for applications where we don't know both voltage and current:

If we only know voltage (***E***) and resistance (***R***):

$$\textit{If,} \quad I = \frac{E}{R} \quad \textit{and} \quad P = I\,E$$

$$\textit{Then,} \quad P = \frac{E}{R}\,E \quad \textit{or} \quad \mathbf{P = \frac{E^2}{R}}$$

If we only know current (***I***) and resistance (***R***):

$$\textit{If,} \quad E = I\,R \quad \textit{and} \quad P = I\,E$$

$$\textit{Then,} \quad P = I(I\,R) \quad \textit{or} \quad \mathbf{P = I^2 R}$$

A historical note: it was James Prescott Joule, not Georg Simon Ohm, who first discovered the mathematical relationship between power dissipation and current through a resistance. This discovery, published in 1841, followed the form of the last equation ($P = I^2R$), and is properly known as **Joule's Law**. However, these power equations are so commonly associated with the Ohm's Law equations relating voltage, current, and resistance (E=IR ; I=E/R ; and R=E/I) that they are frequently credited to Ohm.

Power equations

$$P = IE \qquad P = \frac{E^2}{R} \qquad P = I^2R$$

Review

- Power measured in *watts*, symbolized by the letter "W".
- Joule's Law: $P = I^2R$; $P = IE$; $P = E^2/R$

This page titled 2.4: Calculating Electric Power is shared under a GNU Free Documentation License 1.3 license and was authored, remixed, and/or curated by Tony R. Kuphaldt (All About Circuits) via source content that was edited to the style and standards of the LibreTexts platform.

2.5: Resistors

What is a Resistor?

Special components called *resistors* are made for the express purpose of creating a precise quantity of resistance for insertion into a circuit. They are typically constructed of metal wire or carbon, and engineered to maintain a stable resistance value over a wide range of environmental conditions. Unlike lamps, they do not produce light, but they do produce heat as electric power is dissipated by them in a working circuit. Typically, though, the purpose of a resistor is not to produce usable heat, but simply to provide a precise quantity of electrical resistance.

Resistor Schematic Symbols

The most common schematic symbol for a resistor is a zig-zag line:

Resistor values in ohms are usually shown as an adjacent number, and if several resistors are present in a circuit, they will be labeled with a unique identifier number such as R_1, R_2, R_3, etc. As you can see, resistor symbols can be shown either horizontally or vertically:

This is resistor "R_1" with a resistance value of 150 ohms.

This is resistor "R_2" with a resistance value of 25 ohms.

Real resistors look nothing like the zig-zag symbol. Instead, they look like small tubes or cylinders with two wires protruding for connection to a circuit. Here is a sampling of different kinds and sizes of resistors:

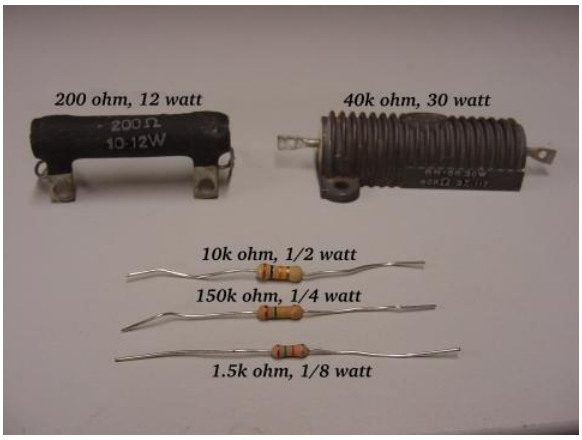

In keeping more with their physical appearance, an alternative schematic symbol for a resistor looks like a small, rectangular box:

Resistors can also be shown to have varying rather than fixed resistances. This might be for the purpose of describing an actual physical device designed for the purpose of providing an adjustable resistance, or it could be to show some component that just happens to have an unstable resistance:

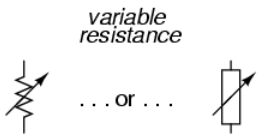

In fact, any time you see a component symbol drawn with a diagonal arrow through it, that component has a variable rather than a fixed value. This symbol “modifier” (the diagonal arrow) is standard electronic symbol convention.

Variable Resistors

Variable resistors must have some physical means of adjustment, either a rotating shaft or lever that can be moved to vary the amount of electrical resistance. Here is a photograph showing some devices called *potentiometers*, which can be used as variable resistors:

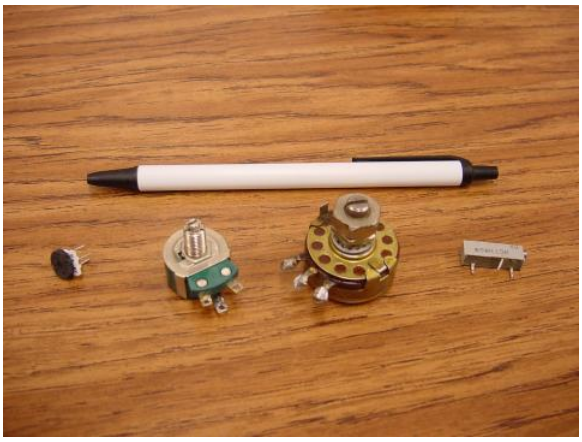

Power Rating of Resistors

Because resistors dissipate heat energy as the electric currents through them overcome the “friction” of their resistance, resistors are also rated in terms of how much heat energy they can dissipate without overheating and sustaining damage. Naturally, this power rating is specified in the physical unit of “watts.” Most resistors found in small electronic devices such as portable radios are rated at 1/4 (0.25) watt or less. The power rating of any resistor is roughly proportional to its physical size. Note in the first resistor photograph how the power ratings relate with size: the bigger the resistor, the higher its power dissipation rating. Also, note how resistances (in ohms) have nothing to do with size!

Although it may seem pointless now to have a device doing nothing but resisting electric current, resistors are extremely useful devices in circuits. Because they are simple and so commonly used throughout the world of electricity and electronics, we’ll spend a considerable amount of time analyzing circuits composed of nothing but resistors and batteries.

How are Resistors Useful?

For a practical illustration of resistors’ usefulness, examine the photograph below. It is a picture of a *printed circuit board*, or *PCB*: an assembly made of sandwiched layers of insulating phenolic fiber-board and conductive copper strips, into which components may be inserted and secured by a low-temperature welding process called “soldering.” The various components on this circuit board are identified by printed labels. Resistors are denoted by any label beginning with the letter “R”.

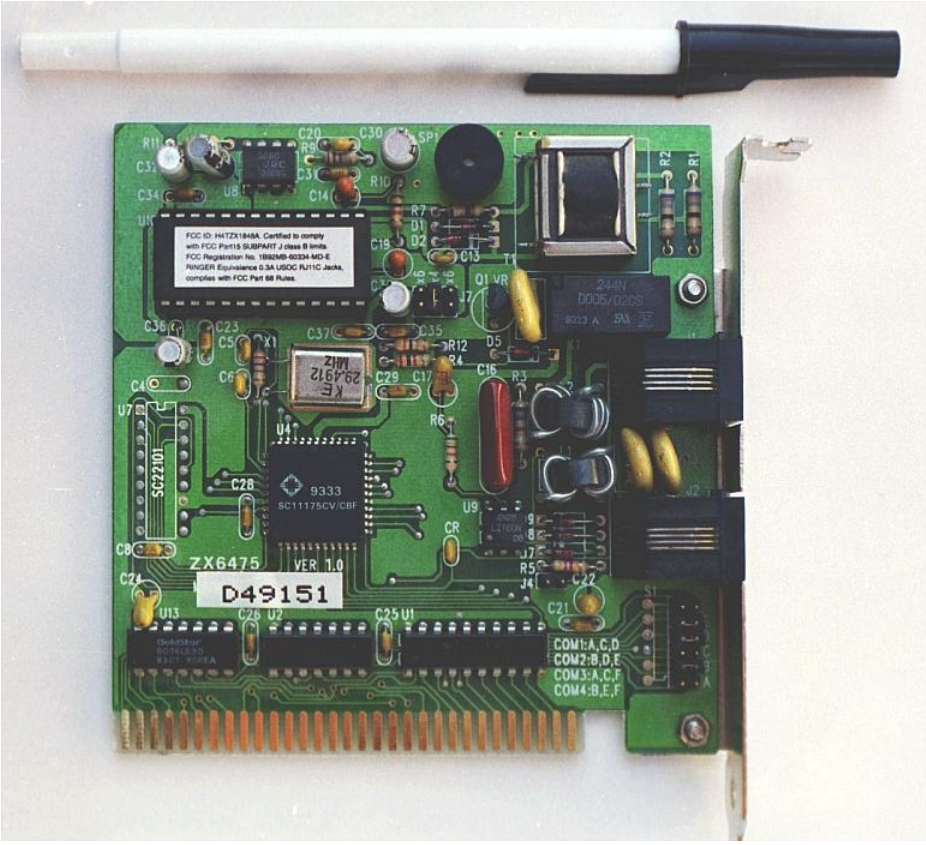

This particular circuit board is a computer accessory called a “modem,” which allows digital information transfer over telephone lines. There are at least a dozen resistors (all rated at 1/4 watt power dissipation) that can be seen on this modem’s board. Every one of the black rectangles (called “integrated circuits” or “chips”) contain their own array of resistors for their internal functions, as well.

Another circuit board example shows resistors packaged in even smaller units, called “surface mount devices.” This particular circuit board is the underside of a personal computer hard disk drive, and once again the resistors soldered onto it are designated with labels beginning with the letter “R”:

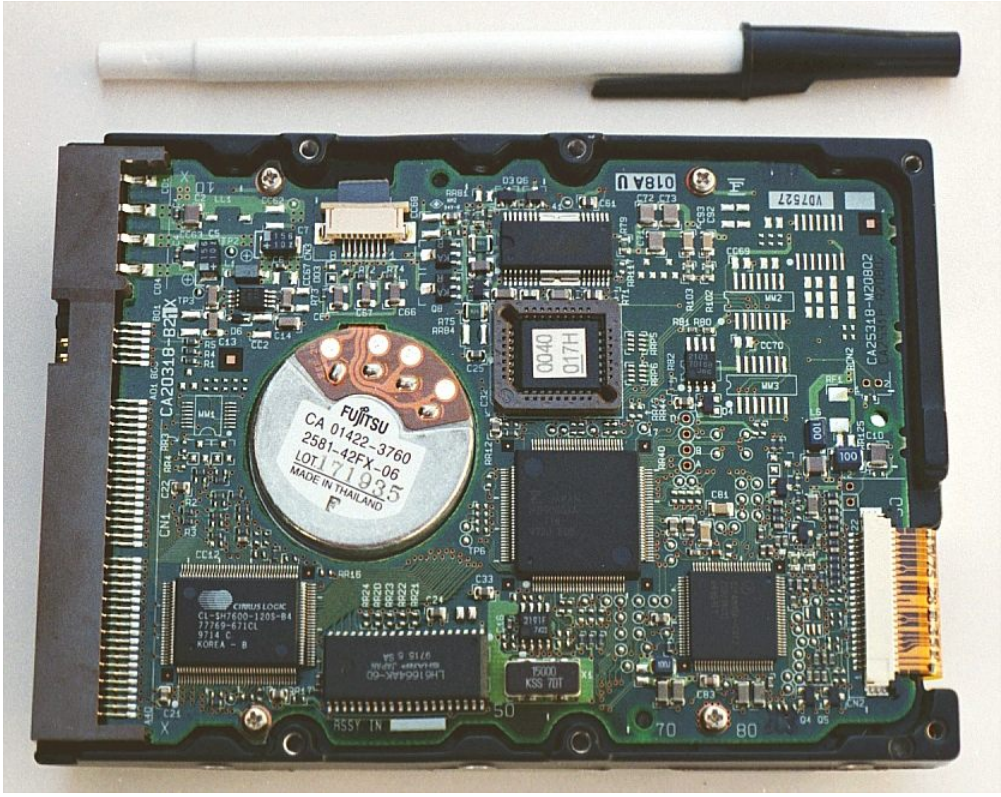

There are over one hundred surface-mount resistors on this circuit board, and this count, of course, does not include the number of resistors internal to the black "chips." These two photographs should convince anyone that resistors—devices that "merely" oppose the flow of electrons—are very important components in the realm of electronics!

"Load" on Schematic Diagrams

In schematic diagrams, resistor symbols are sometimes used to illustrate any general type of device in a circuit doing something useful with electrical energy. Any non-specific electrical device is generally called a *load*, so if you see a schematic diagram showing a resistor symbol labeled "load," especially in a tutorial circuit diagram explaining some concept unrelated to the actual use of electrical power, that symbol may just be a kind of shorthand representation of something else more practical than a resistor.

Analyzing Resistor Circuits

To summarize what we've learned in this lesson, let's analyze the following circuit, determining all that we can from the information given:

All we've been given here to start with is the battery voltage (10 volts) and the circuit current (2 amps). We don't know the resistor's resistance in ohms or the power dissipated by it in watts. Surveying our array of Ohm's Law equations, we find two equations that give us answers from known quantities of voltage and current:

Inserting the known quantities of voltage (E) and current (I) into these two equations, we can determine circuit resistance (R) and power dissipation (P):

For the circuit conditions of 10 volts and 2 amps, the resistor's resistance must be 5 Ω. If we were designing a circuit to operate at these values, we would have to specify a resistor with a minimum power rating of 20 watts, or else it would overheat and fail.

Resistor Materials

Resistors can be found in a variety of different materials, each one with its own properties and specific areas of use. Most electrical engineers use the types found below:

Wirewound (WW)

Wire Wound Resistors are manufactured by winding resistance wire around a non-conductive core in a spiral. They are typically produced for high precision and power applications. The core is usually made of ceramic or fiberglass and the resistance wire is made of nickel-chromium alloy and are not suitable for applications with frequencies higher than 50kHz. Low noise and stability with respect to temperature variations are standard characteristics of Wire Wound Resistors. Resistance values are available from 0.1 up to 100 kW, with accuracies between 0.1% and 20%.

Metal Film

Nichrome or tantalum nitride are typically used for metal film resistors. A combination of a ceramic material and a metal typically make up the resistive material. The resistance value is changed by cutting a spiral pattern in them film, much like carbon film with a laser or abrasive. Metal film resistors are usually less stable over temperature than wire wound resistors, but handle higher frequencies better.

Metal Oxide Film

Metal oxide resistors use metal oxides such as tin oxide, making them slightly different from metal film resistors. These resistors are reliable and stable and operate at higher temperatures than metal film resistors. Because of this, metal oxide film resistors are used in applications that require high endurance.

Foil

Developed in the 1960's, the foil resistor is still one of the most accurate and stable types of resistor that you'll find and are used for applications with high precision requirements. A ceramic substrate that has a thin bulk metal foil cemented to it makes up the resistive element. Foil Resistors feature a very low temperature coefficient of resistance.

Carbon Composition (CCR)

Until the 1960s Carbon Composition Resistors were the standard for most applications. They are reliable, but not very accurate (their tolerance cannot be better than about 5%). A mixture of fine carbon particles and non-conductive ceramic material are used for the resistive element of CCR Resistors. The substance is molded into the shape of a cylinder and baked. The dimensions of the body and the ratio of carbon to ceramic material determine the resistance value. More carbon used in the process means there will be a lower resistance. CCR resistors are still useful for certain applications because of their ability to withstand high energy pulses, a good example application would be in a power supply.

Carbon Film

Carbon film resistors have a thin carbon film (with a spiral cut in the film to increase the resistive path) on an insulating cylindrical core. This allows for the resistance value to be more accurate and also increases the resistance value. Carbon film resistors are much more accurate than carbon composition resistors. Special carbon film resistors are used in applications that require high pulse stability.

Key Performance Indicators (KPIs)

The KPIs for each resistor material can be found below:

Review

Devices called *resistors* are built to provide precise amounts of resistance in electric circuits. Resistors are rated both in terms of their resistance (ohms) and their ability to dissipate heat energy (watts).

- Resistor resistance ratings cannot be determined from the physical size of the resistor(s) in question, although approximate power ratings can. The larger the resistor is, the more power it can safely dissipate without suffering damage.

- Any device that performs some useful task with electric power is generally known as a *load*. Sometimes resistor symbols are used in schematic diagrams to designate a non-specific load, rather than an actual resistor.

This page titled 2.5: Resistors is shared under a GNU Free Documentation License 1.3 license and was authored, remixed, and/or curated by Tony R. Kuphaldt (All About Circuits) via source content that was edited to the style and standards of the LibreTexts platform.

2.6: Nonlinear Conduction

For instance, our previous circuit example with the 3 Ω lamp, we calculated current through the circuit by dividing voltage by resistance (I=E/R). With an 18 volt battery, our circuit current was 6 amps. Doubling the battery voltage to 36 volts resulted in a doubled current of 12 amps. All of this makes sense, of course, so long as the lamp continues to provide exactly the same amount of friction (resistance) to the flow of electrons through it: 3 Ω.

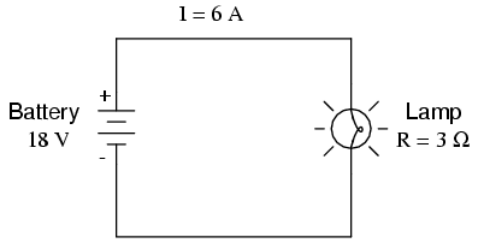

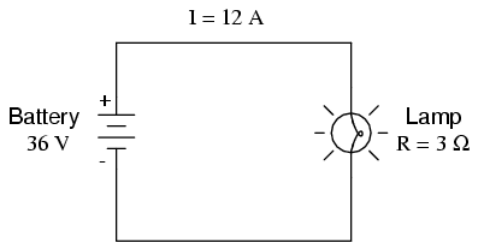

However, reality is not always this simple. One of the phenomena explored in a later chapter is that of conductor resistance *changing* with temperature. In an incandescent lamp (the kind employing the principle of electric current heating a thin filament of wire to the point that it glows white-hot), the resistance of the filament wire will increase dramatically as it warms from room temperature to operating temperature. If we were to increase the supply voltage in a real lamp circuit, the resulting increase in current would cause the filament to increase temperature, which would in turn increase its resistance, thus preventing further increases in current without further increases in battery voltage. Consequently, voltage and current do not follow the simple equation "I=E/R" (with R assumed to be equal to 3 Ω) because an incandescent lamp's filament resistance does not remain stable for different currents.

The phenomenon of resistance changing with variations in temperature is one shared by almost all metals, of which most wires are made. For most applications, these changes in resistance are small enough to be ignored. In the application of metal lamp filaments, the change happens to be quite large.

This is just one example of "nonlinearity" in electric circuits. It is by no means the only example. A "linear" function in mathematics is one that tracks a straight line when plotted on a graph. The simplified version of the lamp circuit with a constant filament resistance of 3 Ω generates a plot like this:

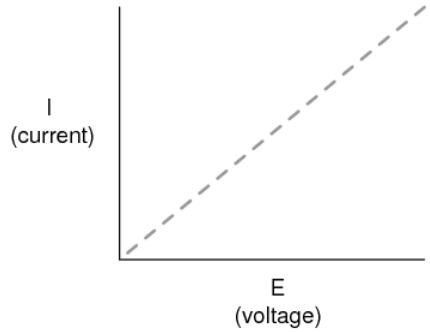

The straight-line plot of current over voltage indicates that resistance is a stable, unchanging value for a wide range of circuit voltages and currents. In an "ideal" situation, this is the case. Resistors, which are manufactured to provide a definite, stable value

of resistance, behave very much like the plot of values seen above. A mathematician would call their behavior “linear.”

A more realistic analysis of a lamp circuit, however, over several different values of battery voltage would generate a plot of this shape:

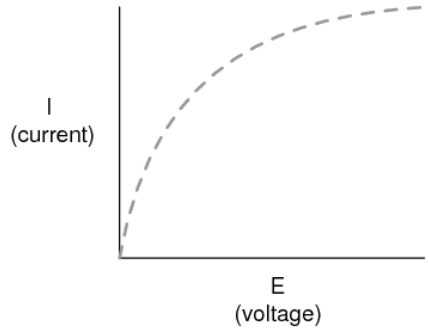

The plot is no longer a straight line. It rises sharply on the left, as voltage increases from zero to a low level. As it progresses to the right we see the line flattening out, the circuit requiring greater and greater increases in voltage to achieve equal increases in current.

If we try to apply Ohm’s Law to find the resistance of this lamp circuit with the voltage and current values plotted above, we arrive at several different values. We could say that the resistance here is *nonlinear*, increasing with increasing current and voltage. The nonlinearity is caused by the effects of high temperature on the metal wire of the lamp filament.

Another example of nonlinear current conduction is through gases such as air. At standard temperatures and pressures, air is an effective insulator. However, if the voltage between two conductors separated by an air gap is increased greatly enough, the air molecules between the gap will become “ionized,” having their electrons stripped off by the force of the high voltage between the wires. Once ionized, air (and other gases) become good conductors of electricity, allowing electron flow where none could exist prior to ionization. If we were to plot current over voltage on a graph as we did with the lamp circuit, the effect of ionization would be clearly seen as nonlinear:

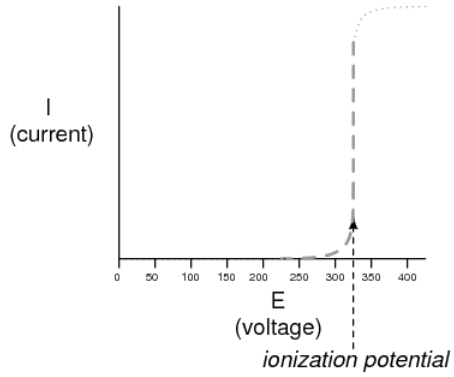

The graph shown is approximate for a small air gap (less than one inch). A larger air gap would yield a higher ionization potential, but the shape of the I/E curve would be very similar: practically no current until the ionization potential was reached, then substantial conduction after that.

Incidentally, this is the reason lightning bolts exist as momentary surges rather than continuous flows of electrons. The voltage built up between the earth and clouds (or between different sets of clouds) must increase to the point where it overcomes the ionization potential of the air gap before the air ionizes enough to support a substantial flow of electrons. Once it does, the current will continue to conduct through the ionized air until the static charge between the two points depletes. Once the charge depletes enough so that the voltage falls below another threshold point, the air de-ionizes and returns to its normal state of extremely high resistance.

Many solid insulating materials exhibit similar resistance properties: extremely high resistance to electron flow below some critical threshold voltage, then a much lower resistance at voltages beyond that threshold. Once a solid insulating material has been

compromised by high-voltage *breakdown*, as it is called, it often does not return to its former insulating state, unlike most gases. It may insulate once again at low voltages, but its breakdown threshold voltage will have been decreased to some lower level, which may allow breakdown to occur more easily in the future. This is a common mode of failure in high-voltage wiring: insulation damage due to breakdown. Such failures may be detected through the use of special resistance meters employing high voltage (1000 volts or more).

There are circuit components specifically engineered to provide nonlinear resistance curves, one of them being the *varistor*. Commonly manufactured from compounds such as zinc oxide or silicon carbide, these devices maintain high resistance across their terminals until a certain "firing" or "breakdown" voltage (equivalent to the "ionization potential" of an air gap) is reached, at which point their resistance decreases dramatically. Unlike the breakdown of an insulator, varistor breakdown is repeatable: that is, it is designed to withstand repeated breakdowns without failure. A picture of a varistor is shown here:

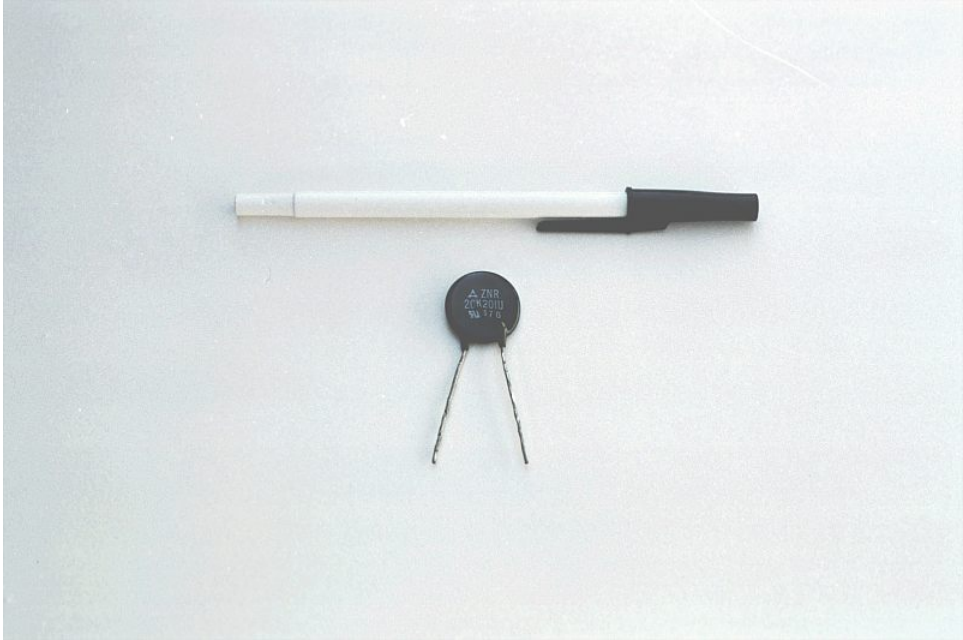

There are also special gas-filled tubes designed to do much the same thing, exploiting the very same principle at work in the ionization of air by a lightning bolt.

Other electrical components exhibit even stranger current/voltage curves than this. Some devices actually experience a *decrease* in current as the applied voltage *increases*. Because the slope of the current/voltage for this phenomenon is negative (angling down instead of up as it progresses from left to right), it is known as *negative resistance*.

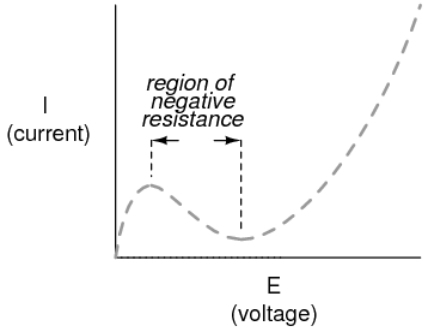

Most notably, high-vacuum electron tubes known as *tetrodes* and semiconductor diodes known as *Esaki* or *tunnel* diodes exhibit negative resistance for certain ranges of applied voltage.

Ohm's Law is not very useful for analyzing the behavior of components like these where resistance varies with voltage and current. Some have even suggested that "Ohm's Law" should be demoted from the status of a "Law" because it is not universal. It might be

more accurate to call the equation (R=E/I) a *definition of resistance*, befitting of a certain class of materials under a narrow range of conditions.

For the benefit of the student, however, we will assume that resistances specified in example circuits *are stable* over a wide range of conditions unless otherwise specified. I just wanted to expose you to a little bit of the complexity of the real world, lest I give you the false impression that the whole of electrical phenomena could be summarized in a few simple equations.

Review

- The resistance of most conductive materials is stable over a wide range of conditions, but this is not true of all materials.
- Any function that can be plotted on a graph as a straight line is called a *linear* function. For circuits with stable resistances, the plot of current over voltage is linear (I=E/R).
- In circuits where resistance varies with changes in either voltage or current, the plot of current over voltage will be *nonlinear* (not a straight line).
- A *varistor* is a component that changes resistance with the amount of voltage impressed across it. With little voltage across it, its resistance is high. Then, at a certain “breakdown” or “firing” voltage, its resistance decreases dramatically.
- *Negative resistance* is where the current through a component actually decreases as the applied voltage across it is increased. Some electron tubes and semiconductor diodes (most notably, the *tetrode* tube and the *Esaki*, or *tunnel* diode, respectively) exhibit negative resistance over a certain range of voltages.

This page titled 2.6: Nonlinear Conduction is shared under a GNU Free Documentation License 1.3 license and was authored, remixed, and/or curated by Tony R. Kuphaldt (All About Circuits) via source content that was edited to the style and standards of the LibreTexts platform.

2.7: Circuit Wiring

So far, we've been analyzing single-battery, single-resistor circuits with no regard for the connecting wires between the components, so long as a complete circuit is formed. Does the wire length or circuit "shape" matter to our calculations? Let's look at a couple of circuit configurations and find out:

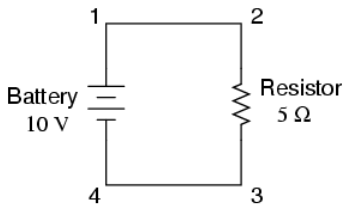

When we draw wires connecting points in a circuit, we usually assume those wires have negligible resistance. As such, they contribute no appreciable effect to the overall resistance of the circuit, and so the only resistance we have to contend with is the resistance in the components. In the above circuits, the only resistance comes from the 5 Ω resistors, so that is all we will consider in our calculations. In real life, metal wires actually *do* have resistance (and so do power sources!), but those resistances are generally so much smaller than the resistance present in the other circuit components that they can be safely ignored. Exceptions to this rule exist in power system wiring, where even very small amounts of conductor resistance can create significant voltage drops given normal (high) levels of current.

If connecting wire resistance is very little or none, we can regard the connected points in a circuit as being *electrically common*. That is, points 1 and 2 in the above circuits may be physically joined close together or far apart, and it doesn't matter for any voltage or resistance measurements relative to those points. The same goes for points 3 and 4. It is as if the ends of the resistor were attached directly across the terminals of the battery, so far as our Ohm's Law calculations and voltage measurements are concerned. This is useful to know, because it means you can re-draw a circuit diagram or re-wire a circuit, shortening or lengthening the wires as desired without appreciably impacting the circuit's function. All that matters is that the components attach to each other in the same sequence.

It also means that voltage measurements between sets of "electrically common" points will be the same. That is, the voltage between points 1 and 4 (directly across the battery) will be the same as the voltage between points 2 and 3 (directly across the resistor). Take a close look at the following circuit, and try to determine which points are common to each other:

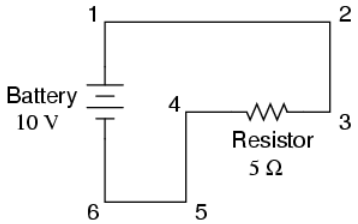

Here, we only have 2 components excluding the wires: the battery and the resistor. Though the connecting wires take a convoluted path in forming a complete circuit, there are several electrically common points in the electrons' path. Points 1, 2, and 3 are all common to each other, because they're directly connected together by wire. The same goes for points 4, 5, and 6.

The voltage between points 1 and 6 is 10 volts, coming straight from the battery. However, since points 5 and 4 are common to 6, and points 2 and 3 common to 1, that same 10 volts also exists between these other pairs of points:

```
Between points 1 and 4 = 10 volts
Between points 2 and 4 = 10 volts
Between points 3 and 4 = 10 volts (directly across the resistor)
Between points 1 and 5 = 10 volts Between points 2 and 5 = 10 volts
Between points 3 and 5 = 10 volts Between points 1 and 6 = 10 volts (directly across the battery)
Between points 2 and 6 = 10 volts Between points 3 and 6 = 10 volts
```

Since electrically common points are connected together by (zero resistance) wire, there is no significant voltage drop between them regardless of the amount of current conducted from one to the next through that connecting wire. Thus, if we were to read voltages between common points, we should show (practically) zero:

```
Between points 1 and 2 = 0 volts
Points 1, 2, and 3 are Between points 2 and 3 = 0 volts electrically common
Between points 1 and 3 = 0 volts
Between points 4 and 5 = 0 volts
Points 4, 5, and 6 are Between points 5 and 6 = 0 volts electrically common
Between points 4 and 6 = 0 volts
```

This makes sense mathematically, too. With a 10 volt battery and a 5 Ω resistor, the circuit current will be 2 amps. With wire resistance being zero, the voltage drop across any continuous stretch of wire can be determined through Ohm's Law as such:

$$E = I\,R$$
$$E = (2\text{ A})(0\ \Omega)$$
$$E = 0\text{ V}$$

It should be obvious that the calculated voltage drop across any uninterrupted length of wire in a circuit where wire is assumed to have zero resistance will always be zero, no matter what the magnitude of current, since zero multiplied by anything equals zero.

Because common points in a circuit will exhibit the same relative voltage and resistance measurements, wires connecting common points are often labeled with the same designation. This is not to say that the *terminal* connection points are labeled the same, just the connecting wires. Take this circuit as an example:

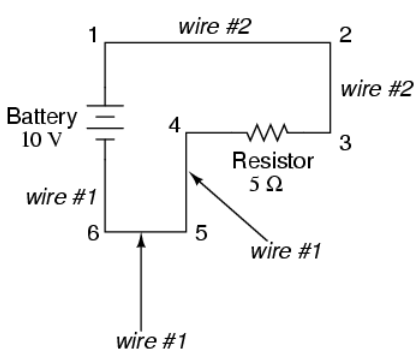

Points 1, 2, and 3 are all common to each other, so the wire connecting point 1 to 2 is labeled the same (wire 2) as the wire connecting point 2 to 3 (wire 2). In a real circuit, the wire stretching from point 1 to 2 may not even be the same color or size as the wire connecting point 2 to 3, but they should bear the exact same label. The same goes for the wires connecting points 6, 5, and 4.

Knowing that electrically common points have zero voltage drop between them is a valuable troubleshooting principles. If I measure for voltage between points in a circuit that are supposed to be common to each other, I should read zero. If, however, I read substantial voltage between those two points, then I know with certainty that they cannot be directly connected together. If those points are *supposed* to be electrically common but they register otherwise, then I know that there is an "open failure" between those points.

One final note: for most practical purposes, wire conductors can be assumed to possess zero resistance from end to end. In reality, however, there will always be some small amount of resistance encountered along the length of a wire, unless its a superconducting wire. Knowing this, we need to bear in mind that the principles learned here about electrically common points are all valid to a large degree, but not to an *absolute* degree. That is, the rule that electrically common points are guaranteed to have zero voltage between them is more accurately stated as such: electrically common points will have *very little* voltage dropped between them. That small,

virtually unavoidable trace of resistance found in any piece of connecting wire is bound to create a small voltage across the length of it as current is conducted through. So long as you understand that these rules are based upon *ideal* conditions, you won't be perplexed when you come across some condition appearing to be an exception to the rule.

Review

- Connecting wires in a circuit are assumed to have zero resistance unless otherwise stated.
- Wires in a circuit can be shortened or lengthened without impacting the circuit's function—all that matters is that the components are attached to one another in the same sequence.
- Points directly connected together in a circuit by zero resistance (wire) are considered to be *electrically common*.
- Electrically common points, with zero resistance between them, will have zero voltage dropped between them, regardless of the magnitude of current (ideally).
- The voltage or resistance readings referenced between sets of electrically common points will be the same.
- These rules apply to *ideal* conditions, where connecting wires are assumed to possess absolutely zero resistance. In real life this will probably not be the case, but wire resistances should be low enough so that the general principles stated here still hold.

This page titled 2.7: Circuit Wiring is shared under a GNU Free Documentation License 1.3 license and was authored, remixed, and/or curated by Tony R. Kuphaldt (All About Circuits) via source content that was edited to the style and standards of the LibreTexts platform.

2.8: Polarity of voltage drops

We can trace the direction that electrons will flow in the same circuit by starting at the negative (-) terminal and following through to the positive (+) terminal of the battery, the only source of voltage in the circuit. From this we can see that the electrons are moving counter-clockwise, from point 6 to 5 to 4 to 3 to 2 to 1 and back to 6 again.

As the current encounters the 5 Ω resistance, voltage is dropped across the resistor's ends. The polarity of this voltage drop is negative (-) at point 4 with respect to positive (+) at point 3. We can mark the polarity of the resistor's voltage drop with these negative and positive symbols, in accordance with the direction of current (whichever end of the resistor the current is *entering* is negative with respect to the end of the resistor it is *exiting*:

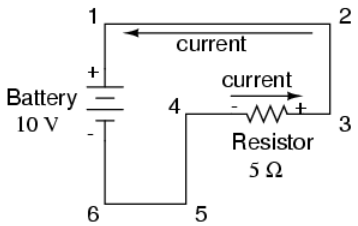

We could make our table of voltages a little more complete by marking the polarity of the voltage for each pair of points in this circuit:

```
Between points 1 (+) and 4 (-) = 10 volts
Between points 2 (+) and 4 (-) = 10 volts
Between points 3 (+) and 4 (-) = 10 volts
Between points 1 (+) and 5 (-) = 10 volts
Between points 2 (+) and 5 (-) = 10 volts
Between points 3 (+) and 5 (-) = 10 volts
Between points 1 (+) and 6 (-) = 10 volts
Between points 2 (+) and 6 (-) = 10 volts
Between points 3 (+) and 6 (-) = 10 volts
```

While it might seem a little silly to document polarity of voltage drop in this circuit, it is an important concept to master. It will be critically important in the analysis of more complex circuits involving multiple resistors and/or batteries.

It should be understood that polarity has nothing to do with Ohm's Law: there will never be negative voltages, currents, or resistance entered into any Ohm's Law equations! There are other mathematical principles of electricity that do take polarity into account through the use of signs (+ or -), but not Ohm's Law.

Review

- The polarity of the voltage drop across any resistive component is determined by the direction of electron flow through it: *negative* entering, and *positive* exiting.

This page titled 2.8: Polarity of voltage drops is shared under a GNU Free Documentation License 1.3 license and was authored, remixed, and/or curated by Tony R. Kuphaldt (All About Circuits) via source content that was edited to the style and standards of the LibreTexts platform.

2.9: Computer Simulation of Electric Circuits

These same programs can be fantastic aids to the beginning student of electronics, allowing the exploration of ideas quickly and easily with no assembly of real circuits required. Of course, there is no substitute for actually building and testing real circuits, but computer simulations certainly assist in the learning process by allowing the student to experiment with changes and see the effects they have on circuits. Throughout this book, I'll be incorporating computer printouts from circuit simulation frequently in order to illustrate important concepts. By observing the results of a computer simulation, a student can gain an intuitive grasp of circuit behavior without the intimidation of abstract mathematical analysis.

To simulate circuits on computer, I make use of a particular program called SPICE, which works by describing a circuit to the computer by means of a listing of text. In essence, this listing is a kind of computer program in itself, and must adhere to the syntactical rules of the SPICE language. The computer is then used to process, or "run," the SPICE program, which interprets the text listing describing the circuit and outputs the results of its detailed mathematical analysis, also in text form. Many details of using SPICE are described in volume 5 ("Reference") of this book series for those wanting more information. Here, I'll just introduce the basic concepts and then apply SPICE to the analysis of these simple circuits we've been reading about.

First, we need to have SPICE installed on our computer. As a free program, it is commonly available on the internet for download, and in formats appropriate for many different operating systems. In this book, I use one of the earlier versions of SPICE: version 2G6, for its simplicity of use.

Next, we need a circuit for SPICE to analyze. Let's try one of the circuits illustrated earlier in the chapter. Here is its schematic diagram:

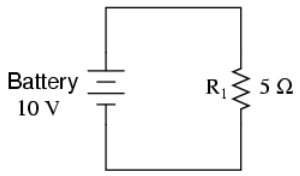

This simple circuit consists of a battery and a resistor connected directly together. We know the voltage of the battery (10 volts) and the resistance of the resistor (5 Ω), but nothing else about the circuit. If we describe this circuit to SPICE, it should be able to tell us (at the very least), how much current we have in the circuit by using Ohm's Law (I=E/R).

SPICE cannot directly understand a schematic diagram or any other form of graphical description. SPICE is a text-based computer program, and demands that a circuit be described in terms of its constituent components and connection points. Each unique connection point in a circuit is described for SPICE by a "node" number. Points that are electrically common to each other in the circuit to be simulated are designated as such by sharing the same number. It might be helpful to think of these numbers as "wire" numbers rather than "node" numbers, following the definition given in the previous section. This is how the computer knows what's connected to what: by the sharing of common wire, or node, numbers. In our example circuit, we only have two "nodes," the top wire and the bottom wire. SPICE demands there be a node 0 somewhere in the circuit, so we'll label our wires 0 and 1:

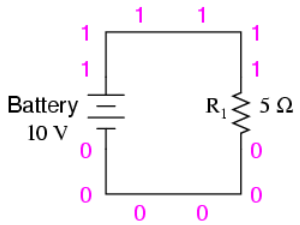

In the above illustration, I've shown multiple "1" and "0" labels around each respective wire to emphasize the concept of common points sharing common node numbers, but still this is a graphic image, not a text description. SPICE needs to have the component values and node numbers given to it in text form before any analysis may proceed.

Creating a text file in a computer involves the use of a program called a *text editor*. Similar to a word processor, a text editor allows you to type text and record what you've typed in the form of a file stored on the computer's hard disk. Text editors lack the

formatting ability of word processors (no *italic*, **bold**, or underlined characters), and this is a good thing, since programs such as SPICE wouldn't know what to do with this extra information. If we want to create a plain-text file, with absolutely nothing recorded except the keyboard characters we select, a text editor is the tool to use.

If using a Microsoft operating system such as DOS or Windows, a couple of text editors are readily available with the system. In DOS, there is the old *Edit* text editing program, which may be invoked by typing `edit` at the command prompt. In Windows (3.x/95/98/NT/Me/2k/XP), the *Notepad* text editor is your stock choice. Many other text editing programs are available, and some are even free. I happen to use a free text editor called *Vim*, and run it under both Windows 95 and Linux operating systems. It matters little which editor you use, so don't worry if the screenshots in this section don't look like yours; the important information here is *what you type*, not *which editor* you happen to use.

To describe this simple, two-component circuit to SPICE, I will begin by invoking my text editor program and typing in a "title" line for the circuit:

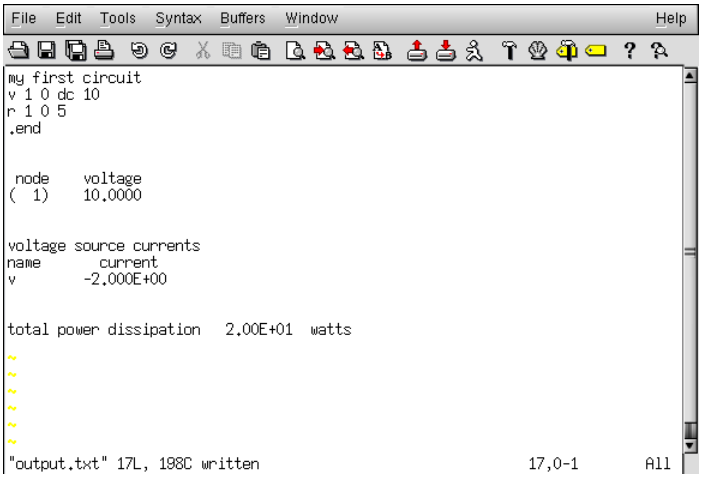

We can describe the battery to the computer by typing in a line of text starting with the letter "v" (for "Voltage source"), identifying which wire each terminal of the battery connects to (the node numbers), and the battery's voltage, like this:

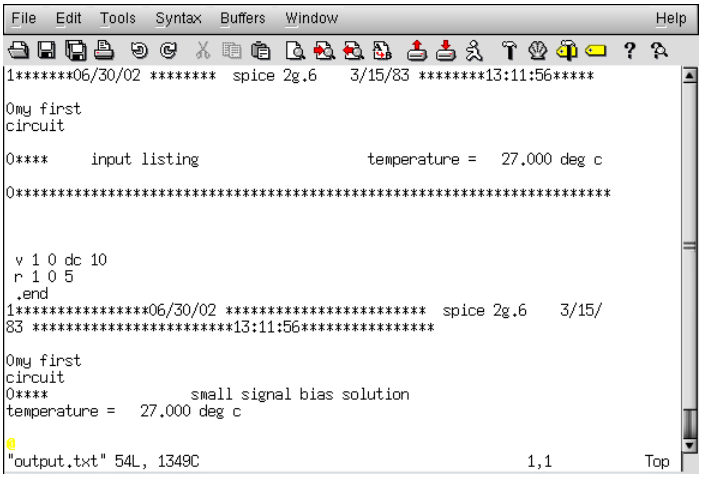

This line of text tells SPICE that we have a voltage source connected between nodes 1 and 0, direct current (DC), 10 volts. That's all the computer needs to know regarding the battery. Now we turn to the resistor: SPICE requires that resistors be described with a letter "r," the numbers of the two nodes (connection points), and the resistance in ohms. Since this is a computer simulation, there is no need to specify a power rating for the resistor. That's one nice thing about "virtual" components: they can't be harmed by excessive voltages or currents!

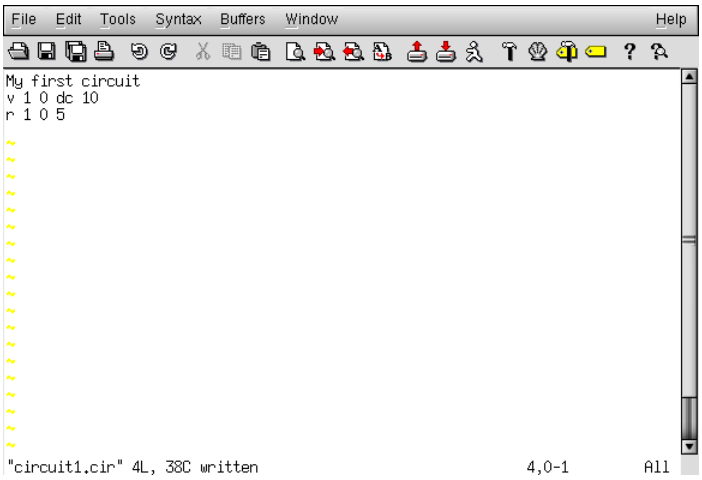

Now, SPICE will know there is a resistor connected between nodes 1 and 0 with a value of 5 Ω. This very brief line of text tells the computer we have a resistor (”r”) connected between the same two nodes as the battery (1 and 0), with a resistance value of 5 Ω.

If we add an `.end` statement to this collection of SPICE commands to indicate the end of the circuit description, we will have all the information SPICE needs, collected in one file and ready for processing. This circuit description, comprised of lines of text in a computer file, is technically known as a *netlist*, or *deck*:

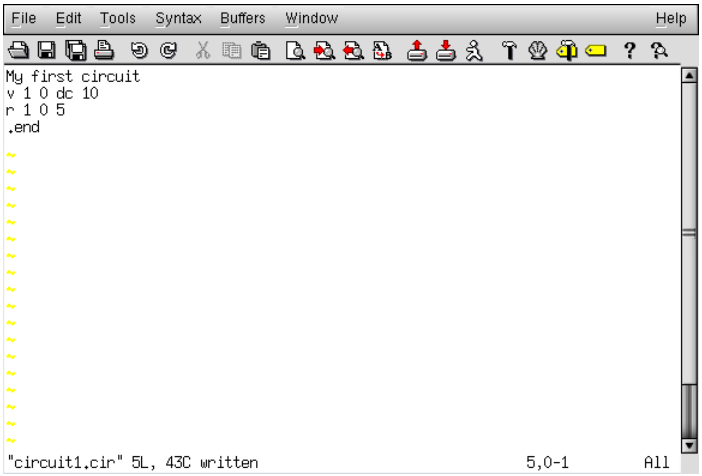

Once we have finished typing all the necessary SPICE commands, we need to “save” them to a file on the computer’s hard disk so that SPICE has something to reference to when invoked. Since this is my first SPICE netlist, I’ll save it under the filename “`circuit1.cir`” (the actual name being arbitrary). You may elect to name your first SPICE netlist something completely different, just as long as you don’t violate any filename rules for your operating system, such as using no more than 8+3 characters (eight characters in the name, and three characters in the extension: `12345678.123`) in DOS.

To invoke SPICE (tell it to process the contents of the `circuit1.cir` netlist file), we have to exit from the text editor and access a command prompt (the “DOS prompt” for Microsoft users) where we can enter text commands for the computer’s operating system to obey. This “primitive” way of invoking a program may seem archaic to computer users accustomed to a “point-and-click” graphical environment, but it is a very powerful and flexible way of doing things. Remember, what you’re doing here by using SPICE is a simple form of computer programming, and the more comfortable you become in giving the computer text-form commands to follow—as opposed to simply clicking on icon images using a mouse—the more mastery you will have over your computer.

Once at a command prompt, type in this command, followed by an [Enter] keystroke (this example uses the filename `circuit1.cir`; if you have chosen a different filename for your netlist file, substitute it):

```
spice < circuit1.cir
```

Here is how this looks on my computer (running the Linux operating system), just before I press the [Enter] key:

As soon as you press the [Enter] key to issue this command, text from SPICE's output should scroll by on the computer screen. Here is a screenshot showing what SPICE outputs on my computer (I've lengthened the "terminal" window to show you the full text. With a normal-size terminal, the text easily exceeds one page length):

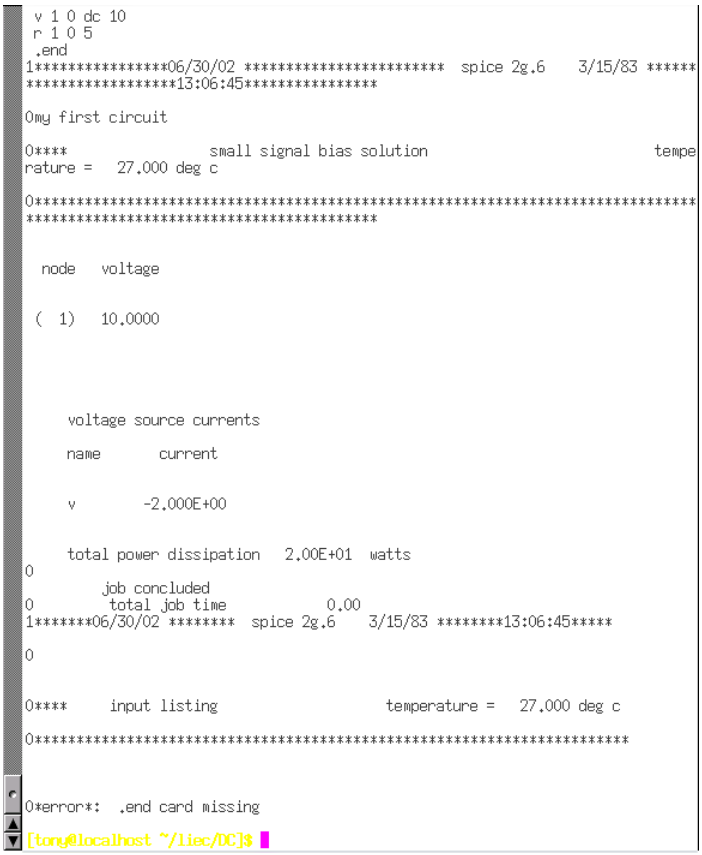

SPICE begins with a reiteration of the netlist, complete with title line and `.end` statement. About halfway through the simulation it displays the voltage at all nodes with reference to node 0. In this example, we only have one node other than node 0, so it displays the voltage there: 10.0000 volts. Then it displays the current through each voltage source. Since we only have one voltage source in the entire circuit, it only displays the current through that one. In this case, the source current is 2 amps. Due to a quirk in the way SPICE analyzes current, the value of 2 amps is output as a negative (-) 2 amps.

The last line of text in the computer's analysis report is "total power dissipation," which in this case is given as "2.00E+01" watts: 2.00 x 10^1, or 20 watts. SPICE outputs most figures in scientific notation rather than normal (fixed-point) notation. While this may seem to be more confusing at first, it is actually less confusing when very large or very small numbers are involved. The details of scientific notation will be covered in the next chapter of this book.

One of the benefits of using a "primitive" text-based program such as SPICE is that the text files dealt with are extremely small compared to other file formats, especially graphical formats used in other circuit simulation software. Also, the fact that SPICE's output is plain text means you can direct SPICE's output to another text file where it may be further manipulated. To do this, we re-issue a command to the computer's operating system to invoke SPICE, this time redirecting the output to a file I'll call "`output.txt`":

SPICE will run "silently" this time, without the stream of text output to the computer screen as before. A new file, `output1.txt`, will be created, which you may open and change using a text editor or word processor. For this illustration, I'll use the same text editor (*Vim*) to open this file:

Now, I may freely edit this file, deleting any extraneous text (such as the "banners" showing date and time), leaving only the text that I feel to be pertinent to my circuit's analysis:

Once suitably edited and re-saved under the same filename (`output.txt` in this example), the text may be pasted into any kind of document, "plain text" being a universal file format for almost all computer systems. I can even include it directly in the text of this book—rather than as a "screenshot" graphic image—like this:

Incidentally, this is the preferred format for text output from SPICE simulations in this book series: as real text, not as graphic screenshot images.

To alter a component value in the simulation, we need to open up the netlist file (`circuit1.cir`) and make the required modifications in the text description of the circuit, then save those changes to the same filename, and re-invoke SPICE at the command prompt. This process of editing and processing a text file is one familiar to every computer programmer. One of the reasons I like to teach SPICE is that it prepares the learner to think and work like a computer programmer, which is good because computer programming is a significant area of advanced electronics work.

Earlier we explored the consequences of changing one of the three variables in an electric circuit (voltage, current, or resistance) using Ohm's Law to mathematically predict what would happen. Now let's try the same thing using SPICE to do the math for us.

If we were to triple the voltage in our last example circuit from 10 to 30 volts and keep the circuit resistance unchanged, we would expect the current to triple as well. Let's try this, re-naming our netlist file so as to not over-write the first file. This way, we will have *both* versions of the circuit simulation stored on the hard drive of our computer for future use. The following text listing is the output of SPICE for this modified netlist, formatted as plain text rather than as a graphic image of my computer screen:

Just as we expected, the current tripled with the voltage increase. Current used to be 2 amps, but now it has increased to 6 amps (-6.000×10^0). Note also how the total power dissipation in the circuit has increased. It was 20 watts before, but now is 180 watts (1.8×10^2). Recalling that power is related to the square of the voltage (Joule's Law: $P=E^2/R$), this makes sense. If we triple the circuit voltage, the power should increase by a factor of nine ($3^2 = 9$). Nine times 20 is indeed 180, so SPICE's output does indeed correlate with what we know about power in electric circuits.

If we want to see how this simple circuit would respond over a wide range of battery voltages, we can invoke some of the more advanced options within SPICE. Here, I'll use the "`.dc`" analysis option to vary the battery voltage from 0 to 100 volts in 5 volt increments, printing out the circuit voltage and current at every step. The lines in the SPICE netlist beginning with a star symbol ("`*`") are *comments*. That is, they don't tell the computer to do anything relating to circuit analysis, but merely serve as notes for any human being reading the netlist text.

The `.print` command in this SPICE netlist instructs SPICE to print columns of numbers corresponding to each step in the analysis:

If I re-edit the netlist file, changing the `.print` command into a `.plot` command, SPICE will output a crude graph made up of text characters:

In both output formats, the left-hand column of numbers represents the battery voltage at each interval, as it increases from 0 volts to 100 volts, 5 volts at a time. The numbers in the right-hand column indicate the circuit current for each of those voltages. Look closely at those numbers and you'll see the proportional relationship between each pair: Ohm's Law (I=E/R) holds true in each and every case, each current value being 1/5 the respective voltage value, because the circuit resistance is exactly 5 Ω. Again, the negative numbers for current in this SPICE analysis is more of a quirk than anything else. Just pay attention to the absolute value of each number unless otherwise specified.

There are even some computer programs able to interpret and convert the non-graphical data output by SPICE into a graphical plot. One of these programs is called *Nutmeg*, and its output looks something like this:

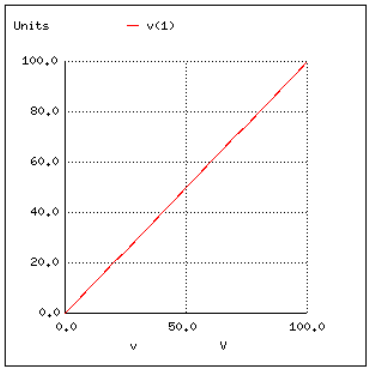

Note how Nutmeg plots the resistor voltage `v(1)` (voltage between node 1 and the implied reference point of node 0) as a line with a positive slope (from lower-left to upper-right).

Whether or not you ever become proficient at using SPICE is not relevant to its application in this book. All that matters is that you develop an understanding for what the numbers mean in a SPICE-generated report. In the examples to come, I'll do my best to annotate the numerical results of SPICE to eliminate any confusion, and unlock the power of this amazing tool to help you understand the behavior of electric circuits.

This page titled 2.9: Computer Simulation of Electric Circuits is shared under a GNU Free Documentation License 1.3 license and was authored, remixed, and/or curated by Tony R. Kuphaldt (All About Circuits) via source content that was edited to the style and standards of the LibreTexts platform.

CHAPTER OVERVIEW

3: Electrical Safety

3.1: The Importance of Electrical Safety
3.2: Physiological Effects of Electricity
3.3: Shock Current Path
3.4: Ohm's Law (again)
3.5: Safe Practices
3.6: Emergency Response
3.7: Common Sources of Hazard
3.8: Safe Circuit Design
3.9: Safe Meter Usage
3.10: Electric Shock Data

This page titled 3: Electrical Safety is shared under a GNU Free Documentation License 1.3 license and was authored, remixed, and/or curated by Tony R. Kuphaldt (All About Circuits) via source content that was edited to the style and standards of the LibreTexts platform.

3.1: The Importance of Electrical Safety

With this lesson, I hope to avoid a common mistake found in electronics textbooks of either ignoring or not covering with sufficient detail the subject of electrical safety. I assume that whoever reads this book has at least a passing interest in actually working with electricity, and as such the topic of safety is of paramount importance. Those authors, editors, and publishers who fail to incorporate this subject into their introductory texts are depriving the reader of life-saving information.

As an instructor of industrial electronics, I spend a full week with my students reviewing the theoretical and practical aspects of electrical safety. The same textbooks I found lacking in technical clarity I also found lacking in coverage of electrical safety, hence the creation of this chapter. Its placement after the first two chapters is intentional: in order for the concepts of electrical safety to make the most sense, some foundational knowledge of electricity is necessary.

Another benefit of including a detailed lesson on electrical safety is the practical context it sets for basic concepts of voltage, current, resistance, and circuit design. The more relevant a technical topic can be made, the more likely a student will be to pay attention and comprehend. And what could be more relevant than application to your own personal safety? Also, with electrical power being such an everyday presence in modern life, almost anyone can relate to the illustrations given in such a lesson. Have you ever wondered why birds don't get shocked while resting on power lines? Read on and find out!

This page titled 3.1: The Importance of Electrical Safety is shared under a GNU Free Documentation License 1.3 license and was authored, remixed, and/or curated by Tony R. Kuphaldt (All About Circuits) via source content that was edited to the style and standards of the LibreTexts platform.

3.2: Physiological Effects of Electricity

As electric current is conducted through a material, any opposition to that flow of electrons (resistance) results in a dissipation of energy, usually in the form of heat. This is the most basic and easy-to-understand effect of electricity on living tissue: current makes it heat up. If the amount of heat generated is sufficient, the tissue may be burnt. The effect is physiologically the same as damage caused by an open flame or other high-temperature source of heat, except that electricity has the ability to burn tissue well beneath the skin of a victim, even burning internal organs.

Another effect of electric current on the body, perhaps the most significant in terms of hazard, regards the nervous system. By "nervous system" I mean the network of special cells in the body called "nerve cells" or "neurons" which process and conduct the multitude of signals responsible for regulation of many body functions. The brain, spinal cord, and sensory/motor organs in the body function together to allow it to sense, move, respond, think, and remember.

Nerve cells communicate to each other by acting as "transducers:" creating electrical signals (very small voltages and currents) in response to the input of certain chemical compounds called *neurotransmitters*, and releasing neurotransmitters when stimulated by electrical signals. If electric current of sufficient magnitude is conducted through a living creature (human or otherwise), its effect will be to override the tiny electrical impulses normally generated by the neurons, overloading the nervous system and preventing both reflex and volitional signals from being able to actuate muscles. Muscles triggered by an external (shock) current will involuntarily contract, and there's nothing the victim can do about it.

This problem is especially dangerous if the victim contacts an energized conductor with his or her hands. The forearm muscles responsible for bending fingers tend to be better developed than those muscles responsible for extending fingers, and so if both sets of muscles try to contract because of an electric current conducted through the person's arm, the "bending" muscles will win, clenching the fingers into a fist. If the conductor delivering current to the victim faces the palm of his or her hand, this clenching action will force the hand to grasp the wire firmly, thus worsening the situation by securing excellent contact with the wire. The victim will be completely unable to let go of the wire.

Medically, this condition of involuntary muscle contraction is called *tetanus*. Electricians familiar with this effect of electric shock often refer to an immobilized victim of electric shock as being "froze on the circuit." Shock-induced tetanus can only be interrupted by stopping the current through the victim.

Even when the current is stopped, the victim may not regain voluntary control over their muscles for a while, as the neurotransmitter chemistry has been thrown into disarray. This principle has been applied in "stun gun" devices such as Tasers, which on the principle of momentarily shocking a victim with a high-voltage pulse delivered between two electrodes. A well-placed shock has the effect of temporarily (a few minutes) immobilizing the victim.

Electric current is able to affect more than just skeletal muscles in a shock victim, however. The diaphragm muscle controlling the lungs, and the heart—which is a muscle in itself—can also be "frozen" in a state of tetanus by electric current. Even currents too low to induce tetanus are often able to scramble nerve cell signals enough that the heart cannot beat properly, sending the heart into a condition known as *fibrillation*. A fibrillating heart flutters rather than beats, and is ineffective at pumping blood to vital organs in the body. In any case, death from asphyxiation and/or cardiac arrest will surely result from a strong enough electric current through the body. Ironically, medical personnel use a strong jolt of electric current applied across the chest of a victim to "jump start" a fibrillating heart into a normal beating pattern.

That last detail leads us into another hazard of electric shock, this one peculiar to public power systems. Though our initial study of electric circuits will focus almost exclusively on DC (Direct Current, or electricity that moves in a continuous direction in a circuit), modern power systems utilize alternating current, or AC. The technical reasons for this preference of AC over DC in power systems are irrelevant to this discussion, but the special hazards of each kind of electrical power are very important to the topic of safety.

> ***How AC affects the body depends largely on frequency. Low-frequency (50- to 60-Hz) AC is used in US (60 Hz) and European (50 Hz) households; it can be more dangerous than high-frequency AC and is 3 to 5 times more dangerous than DC of the same voltage and amperage. Low-frequency AC produces extended muscle contraction***

> ***(tetany), which may freeze the hand to the current's source, prolonging exposure. DC is most likely to cause a single convulsive contraction, which often forces the victim away from the current's source. [MMOM]***

AC's alternating nature has a greater tendency to throw the heart's pacemaker neurons into a condition of fibrillation, whereas DC tends to just make the heart stand still. Once the shock current is halted, a "frozen" heart has a better chance of regaining a normal beat pattern than a fibrillating heart. This is why "defibrillating" equipment used by emergency medics works: the jolt of current supplied by the defibrillator unit is DC, which halts fibrillation and gives the heart a chance to recover.

In either case, electric currents high enough to cause involuntary muscle action are dangerous and are to be avoided at all costs. In the next section, we'll take a look at how such currents typically enter and exit the body, and examine precautions against such occurrences.

Review

- Electric current is capable of producing deep and severe burns in the body due to power dissipation across the body's electrical resistance.
- *Tetanus* is the condition where muscles involuntarily contract due to the passage of external electric current through the body. When involuntary contraction of muscles controlling the fingers causes a victim to be unable to let go of an energized conductor, the victim is said to be "froze on the circuit."
- Diaphragm (lung) and heart muscles are similarly affected by electric current. Even currents too small to induce tetanus can be strong enough to interfere with the heart's pacemaker neurons, causing the heart to flutter instead of strongly beat.
- Direct current (DC) is more likely to cause muscle tetanus than alternating current (AC), making DC more likely to "freeze" a victim in a shock scenario. However, AC is more likely to cause a victim's heart to fibrillate, which is a more dangerous condition for the victim after the shocking current has been halted.

This page titled 3.2: Physiological Effects of Electricity is shared under a GNU Free Documentation License 1.3 license and was authored, remixed, and/or curated by Tony R. Kuphaldt (All About Circuits) via source content that was edited to the style and standards of the LibreTexts platform.

3.3: Shock Current Path

Without two contact points on the body for current to enter and exit, respectively, there is no hazard of shock. This is why birds can safely rest on high-voltage power lines without getting shocked: they make contact with the circuit at only one point.

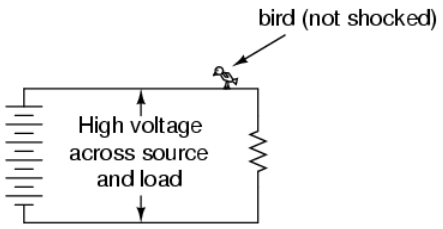

In order for electrons to flow through a conductor, there must be a voltage present to motivate them. Voltage, as you should recall, is *always relative between two points*. There is no such thing as voltage "on" or "at" a single point in the circuit, and so the bird contacting a single point in the above circuit has no voltage applied across its body to establish a current through it. Yes, even though they rest on *two* feet, both feet are touching the same wire, making them *electrically common*. Electrically speaking, both of the bird's feet touch the same point, hence there is no voltage between them to motivate current through the bird's body.

This might lend one to believe that its impossible to be shocked by electricity by only touching a single wire. Like the birds, if we're sure to touch only one wire at a time, we'll be safe, right? Unfortunately, this is not correct. Unlike birds, people are usually standing on the ground when they contact a "live" wire. Many times, one side of a power system will be intentionally connected to earth ground, and so the person touching a single wire is actually making contact between two points in the circuit (the wire and earth ground):

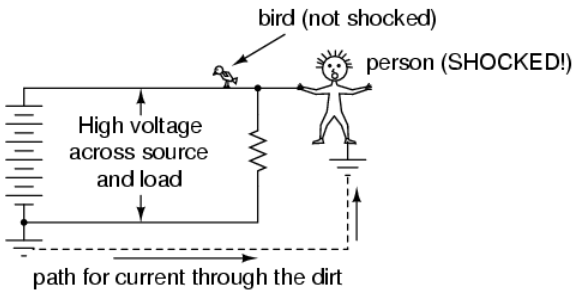

The ground symbol is that set of three horizontal bars of decreasing width located at the lower-left of the circuit shown, and also at the foot of the person being shocked. In real life the power system ground consists of some kind of metallic conductor buried deep in the ground for making maximum contact with the earth. That conductor is electrically connected to an appropriate connection point on the circuit with thick wire. The victim's ground connection is through their feet, which are touching the earth.

A few questions usually arise at this point in the mind of the student:

- If the presence of a ground point in the circuit provides an easy point of contact for someone to get shocked, why have it in the circuit at all? Wouldn't a ground-less circuit be safer?
- The person getting shocked probably isn't bare-footed. If rubber and fabric are insulating materials, then why aren't their shoes protecting them by preventing a circuit from forming?
- How good of a conductor can *dirt* be? If you can get shocked by current through the earth, why not use the earth as a conductor in our power circuits?

In answer to the first question, the presence of an intentional "grounding" point in an electric circuit is intended to ensure that one side of it *is* safe to come in contact with. Note that if our victim in the above diagram were to touch the bottom side of the resistor, nothing would happen even though their feet would still be contacting ground:

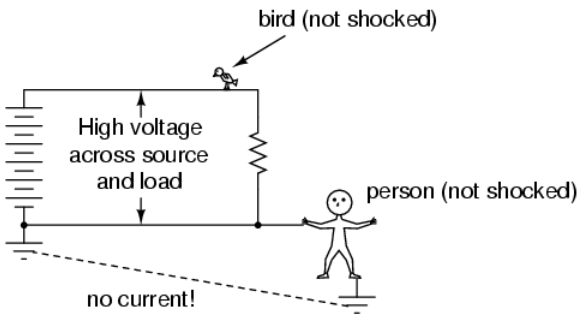

Because the bottom side of the circuit is firmly connected to ground through the grounding point on the lower-left of the circuit, the lower conductor of the circuit is made *electrically common* with earth ground. Since there can be no voltage between electrically common points, there will be no voltage applied across the person contacting the lower wire, and they will not receive a shock. For the same reason, the wire connecting the circuit to the grounding rod/plates is usually left bare (no insulation), so that any metal object it brushes up against will similarly be electrically common with the earth.

Circuit grounding ensures that at least one point in the circuit will be safe to touch. But what about leaving a circuit completely ungrounded? Wouldn't that make any person touching just a single wire as safe as the bird sitting on just one? Ideally, yes. Practically, no. Observe what happens with no ground at all:

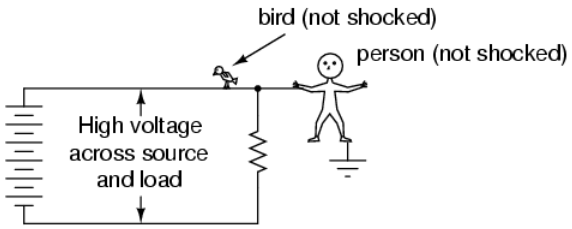

Despite the fact that the person's feet are still contacting ground, any single point in the circuit should be safe to touch. Since there is no complete path (circuit) formed through the person's body from the bottom side of the voltage source to the top, there is no way for a current to be established through the person. However, this could all change with an accidental ground, such as a tree branch touching a power line and providing connection to earth ground:

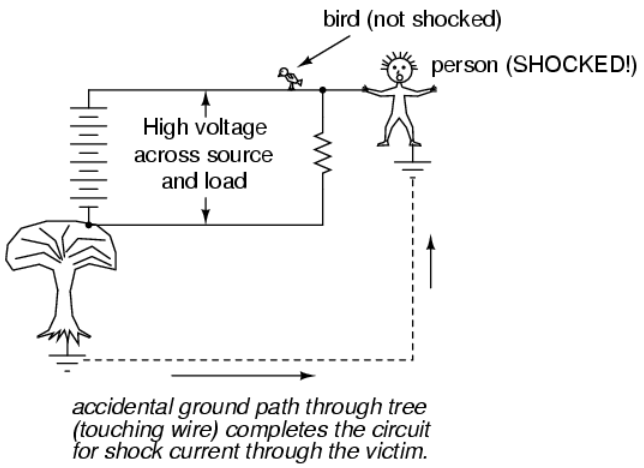

Such an accidental connection between a power system conductor and the earth (ground) is called a *ground fault*. Ground faults may be caused by many things, including dirt buildup on power line insulators (creating a dirty-water path for current from the conductor to the pole, and to the ground, when it rains), ground water infiltration in buried power line conductors, and birds landing on power lines, bridging the line to the pole with their wings. Given the many causes of ground faults, they tend to be unpredicatable. In the case of trees, no one can guarantee *which wire* their branches might touch. If a tree were to brush up against the top wire in the

circuit, it would make the top wire safe to touch and the bottom one dangerous—just the opposite of the previous scenario where the tree contacts the bottom wire:

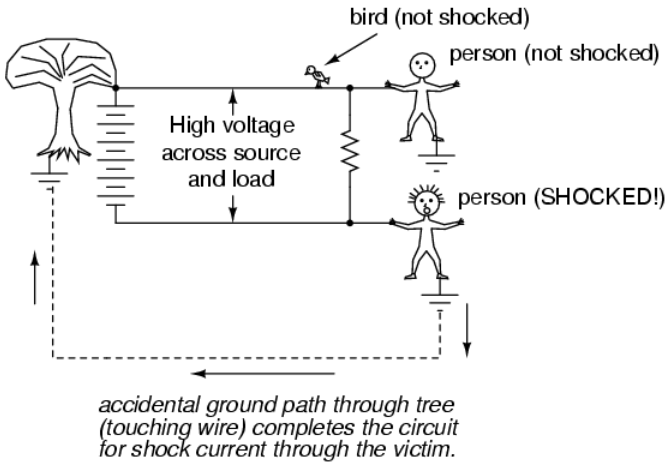

With a tree branch contacting the top wire, that wire becomes the grounded conductor in the circuit, electrically common with earth ground. Therefore, there is no voltage between that wire and ground, but full (high) voltage between the bottom wire and ground. As mentioned previously, tree branches are only one potential source of ground faults in a power system. Consider an ungrounded power system with no trees in contact, but this time with *two* people touching single wires:

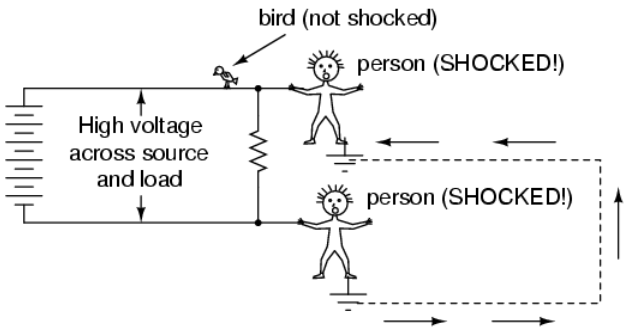

With each person standing on the ground, contacting different points in the circuit, a path for shock current is made through one person, through the earth, and through the other person. Even though each person thinks they're safe in only touching a single point in the circuit, their combined actions create a deadly scenario. In effect, one person acts as the ground fault which makes it unsafe for the other person. This is exactly why ungrounded power systems are dangerous: the voltage between any point in the circuit and ground (earth) is unpredictable, because a ground fault could appear at any point in the circuit at any time. The only character guaranteed to be safe in these scenarios is the bird, who has no connection to earth ground at all! By firmly connecting a designated point in the circuit to earth ground ("grounding" the circuit), at least safety can be assured at that one point. This is more assurance of safety than having no ground connection at all.

In answer to the second question, rubber-soled shoes *do* indeed provide some electrical insulation to help protect someone from conducting shock current through their feet. However, most common shoe designs are not intended to be electrically "safe," their soles being too thin and not of the right substance. Also, any moisture, dirt, or conductive salts from body sweat on the surface of or permeated through the soles of shoes will compromise what little insulating value the shoe had to begin with. There are shoes specifically made for dangerous electrical work, as well as thick rubber mats made to stand on while working on live circuits, but these special pieces of gear must be in absolutely clean, dry condition in order to be effective. Suffice it to say, normal footwear is not enough to guarantee protection against electric shock from a power system.

Research conducted on contact resistance between parts of the human body and points of contact (such as the ground) shows a wide range of figures (see end of chapter for information on the source of this data):

- Hand or foot contact, insulated with rubber: 20 MΩ typical.

- Foot contact through leather shoe sole (dry): 100 kΩ to 500 kΩ
- Foot contact through leather shoe sole (wet): 5 kΩ to 20 kΩ

As you can see, not only is rubber a far better insulating material than leather, but the presence of water in a porous substance such as leather *greatly* reduces electrical resistance.

In answer to the third question, dirt is not a very good conductor (at least not when its dry!). It is too poor of a conductor to support continuous current for powering a load. However, as we will see in the next section, it takes very little current to injure or kill a human being, so even the poor conductivity of dirt is enough to provide a path for deadly current when there is sufficient voltage available, as there usually is in power systems.

Some ground surfaces are better insulators than others. Asphalt, for instance, being oil-based, has a much greater resistance than most forms of dirt or rock. Concrete, on the other hand, tends to have fairly low resistance due to its intrinsic water and electrolyte (conductive chemical) content.

Review

- Electric shock can only occur when contact is made between two points of a circuit; when voltage is applied across a victim's body.
- Power circuits usually have a designated point that is "grounded:" firmly connected to metal rods or plates buried in the dirt to ensure that one side of the circuit is always at ground potential (zero voltage between that point and earth ground).
- A *ground fault* is an accidental connection between a circuit conductor and the earth (ground).
- Special, insulated shoes and mats are made to protect persons from shock via ground conduction, but even these pieces of gear must be in clean, dry condition to be effective. Normal footwear is not good enough to provide protection from shock by insulating its wearer from the earth.
- Though dirt is a poor conductor, it can conduct enough current to injure or kill a human being.

This page titled 3.3: Shock Current Path is shared under a GNU Free Documentation License 1.3 license and was authored, remixed, and/or curated by Tony R. Kuphaldt (All About Circuits) via source content that was edited to the style and standards of the LibreTexts platform.

3.4: Ohm's Law (again)

The principle that "current kills" is essentially correct. It is electric current that burns tissue, freezes muscles, and fibrillates hearts. However, electric current doesn't just occur on its own: there must be voltage available to motivate electrons to flow through a victim. A person's body also presents resistance to current, which must be taken into account.

Taking Ohm's Law for voltage, current, and resistance, and expressing it in terms of current for a given voltage and resistance, we have this equation:

Ohm's Law

$$I = \frac{E}{R} \qquad \text{Current} = \frac{\text{Voltage}}{\text{Resistance}}$$

The amount of current through a body is equal to the amount of voltage applied between two points on that body, divided by the electrical resistance offered by the body between those two points. Obviously, the more voltage available to cause electrons to flow, the easier they will flow through any given amount of resistance. Hence, the danger of high voltage: high voltage means potential for large amounts of current through your body, which will injure or kill you. Conversely, the more resistance a body offers to current, the slower electrons will flow for any given amount of voltage. Just how much voltage is dangerous depends on how much total resistance is in the circuit to oppose the flow of electrons.

Body resistance is not a fixed quantity. It varies from person to person and from time to time. There's even a body fat measurement technique based on a measurement of electrical resistance between a person's toes and fingers. Differing percentages of body fat give provide different resistances: just one variable affecting electrical resistance in the human body. In order for the technique to work accurately, the person must regulate their fluid intake for several hours prior to the test, indicating that body hydration is another factor impacting the body's electrical resistance.

Body resistance also varies depending on how contact is made with the skin: is it from hand-to-hand, hand-to-foot, foot-to-foot, hand-to-elbow, etc.? Sweat, being rich in salts and minerals, is an excellent conductor of electricity for being a liquid. So is blood, with its similarly high content of conductive chemicals. Thus, contact with a wire made by a sweaty hand or open wound will offer much less resistance to current than contact made by clean, dry skin.

Measuring electrical resistance with a sensitive meter, I measure approximately 1 million ohms of resistance (1 MΩ) between my two hands, holding on to the meter's metal probes between my fingers. The meter indicates less resistance when I squeeze the probes tightly and more resistance when I hold them loosely. Sitting here at my computer, typing these words, my hands are clean and dry. If I were working in some hot, dirty, industrial environment, the resistance between my hands would likely be much less, presenting less opposition to deadly current, and a greater threat of electrical shock.

But how much current is harmful? The answer to that question also depends on several factors. Individual body chemistry has a significant impact on how electric current affects an individual. Some people are highly sensitive to current, experiencing involuntary muscle contraction with shocks from static electricity. Others can draw large sparks from discharging static electricity and hardly feel it, much less experience a muscle spasm. Despite these differences, approximate guidelines have been developed through tests which indicate very little current being necessary to manifest harmful effects (again, see the end of the chapter for information on the source of this data). All current figures given in milliamps (a milliamp is equal to 1/1000 of an amp):

Bodily Effect	Men/Women	Direct Current (DC)	60 Hz AC	10 kHz AC
Slight sensation felt at hand(s)				
	Men	1.0 mA	0.4 mA	7 mA
	Women	0.6 mA	0.3 mA	5 mA
Threshold of pain				
	Men	5.2 mA	1.1 mA	12 mA
	Women	3.5 mA	0.7 mA	8 mA
Painful, but voluntary muscle control maintained				
	Men	62 mA	9 mA	55 mA
	Women	41 mA	6 mA	37 mA
Painful, unable to let go of wires				
	Men	76 mA	16 mA	75 mA
	Women	60 mA	15 mA	63 mA
Severe pain, difficulty breathing				
	Men	90 mA	23 mA	94 mA
	Women	60 mA	15 mA	63 mA
Possible heart fibrillation after 3 seconds				
	Men and women		500 mA	100 mA

A table of the effects of electricity on the body

"Hz" stands for the unit of *Hertz*, the measure of how rapidly alternating current alternates, a measure otherwise known as *frequency*. So, the column of figures labeled "60 Hz AC" refers to current that alternates at a frequency of 60 cycles (1 cycle = period of time where electrons flow one direction, then the other direction) per second. The last column, labeled "10 kHz AC," refers to alternating current that completes ten thousand (10,000) back-and-forth cycles each and every second.

Keep in mind that these figures are only approximate, as individuals with different body chemistry may react differently. It has been suggested that an across-the-chest current of only 17 milliamps AC is enough to induce fibrillation in a human subject under certain conditions. Most of our data regarding induced fibrillation comes from animal testing. Obviously, it is not practical to perform tests of induced ventricular fibrillation on human subjects, so the available data is sketchy. Oh, and in case you're wondering, I have no idea why women tend to be more susceptible to electric currents than men!

Suppose I were to place my two hands across the terminals of an AC voltage source at 60 Hz (60 cycles, or alternations back-and-forth, per second). How much voltage would be necessary in this clean, dry state of skin condition to produce a current of 20 milliamps (enough to cause me to become unable to let go of the voltage source)? We can use Ohm's Law (E=IR) to determine this:necessary in this clean, dry state of skin condition to produce a current of 20 milliamps (enough to cause me to become unable to let go of the voltage source)? We can use Ohm's Law (E=IR) to determine this:

E = IR

E = (20 mA)(1 MΩ)

E = 20,000 volts, or 20 kV

Bear in mind that this is a "best case" scenario (clean, dry skin) from the standpoint of electrical safety, and that this figure for voltage represents the amount necessary to induce tetanus. Far less would be required to cause a painful shock! Also keep in mind that the physiological effects of any particular amount of current can vary significantly from person to person, and that these calculations are *rough estimates only*.

With water sprinkled on my fingers to simulate sweat, I was able to measure a hand-to-hand resistance of only 17,000 ohms (17 kΩ). Bear in mind this is only with one finger of each hand contacting a thin metal wire. Recalculating the voltage required to cause a current of 20 milliamps, we obtain this figure:

E = IR

E = (20 mA)(17 kΩ)

E = 340 volts

In this realistic condition, it would only take 340 volts of potential from one of my hands to the other to cause 20 milliamps of current. However, it is still possible to receive a deadly shock from less voltage than this. Provided a much lower body resistance figure augmented by contact with a ring (a band of gold wrapped around the circumference of one's finger makes an *excellent* contact point for electrical shock) or full contact with a large metal object such as a pipe or metal handle of a tool, the body resistance figure could drop as low as 1,000 ohms (1 kΩ), allowing an even lower voltage to present a potential hazard:

E = IR

E = (20 mA)(1 kΩ)

E = 20 volts

Notice that in this condition, 20 volts is enough to produce a current of 20 milliamps through a person: enough to induce tetanus. Remember, it has been suggested a current of only 17 milliamps may induce ventricular (heart) fibrillation. With a hand-to-hand resistance of 1000 Ω, it would only take 17 volts to create this dangerous condition:

E = IR

E = (17 mA)(1 kΩ)

E = 17 volts

Seventeen volts is not very much as far as electrical systems are concerned. Granted, this is a "worst-case" scenario with 60 Hz AC voltage and excellent bodily conductivity, but it does stand to show how little voltage may present a serious threat under certain conditions.

The conditions necessary to produce 1,000 Ω of body resistance don't have to be as extreme as what was presented, either (sweaty skin with contact made on a gold ring). Body resistance may decrease with the application of voltage (especially if tetanus causes the victim to maintain a tighter grip on a conductor) so that with constant voltage a shock may increase in severity after initial contact. What begins as a mild shock—just enough to "freeze" a victim so they can't let go—may escalate into something severe enough to kill them as their body resistance decreases and current correspondingly increases.

Research has provided an approximate set of figures for electrical resistance of human contact points under different conditions (see the end of the chapter for information on the source of this data):

- Wire touched by finger: 40,000 Ω to 1,000,000 Ω dry, 4,000 Ω to 15,000 Ω wet.
- Wire held by hand: 15,000 Ω to 50,000 Ω dry, 3,000 Ω to 5,000 Ω wet.
- Metal pliers held by hand: 5,000 Ω to 10,000 Ω dry, 1,000 Ω to 3,000 Ω wet.
- Contact with palm of hand: 3,000 Ω to 8,000 Ω dry, 1,000 Ω to 2,000 Ω wet.
- 1.5 inch metal pipe grasped by one hand: 1,000 Ω to 3,000 Ω dry, 500 Ω to 1,500 Ω wet.
- 1.5 inch metal pipe grasped by two hands: 500 Ω to 1,500 kΩ dry, 250 Ω to 750 Ω wet.
- Hand immersed in conductive liquid: 200 Ω to 500 Ω.
- Foot immersed in conductive liquid: 100 Ω to 300 Ω.

Note the resistance values of the two conditions involving a 1.5 inch metal pipe. The resistance measured with two hands grasping the pipe is exactly one-half the resistance of one hand grasping the pipe.

With two hands, the bodily contact area is twice as great as with one hand. This is an important lesson to learn: electrical resistance between any contacting objects diminishes with increased contact area, all other factors being equal. With two hands holding the pipe, electrons have two, *parallel* routes through which to flow from the pipe to the body (or vice-versa).

As we will see in a later chapter, *parallel* circuit pathways always result in less overall resistance than any single pathway considered alone.

In industry, 30 volts is generally considered to be a conservative threshold value for dangerous voltage. The cautious person should regard any voltage above 30 volts as threatening, not relying on normal body resistance for protection against shock. That being said, it is still an excellent idea to keep one's hands clean and dry, and remove all metal jewelry when working around electricity.

Even around lower voltages, metal jewelry can present a hazard by conducting enough current to burn the skin if brought into contact between two points in a circuit. Metal rings, especially, have been the cause of more than a few burnt fingers by bridging between points in a low-voltage, high-current circuit.

Also, voltages lower than 30 can be dangerous if they are enough to induce an unpleasant sensation, which may cause you to jerk and accidentally come into contact with a higher voltage or some other hazard. I recall once working on an automobile on a hot summer day. I was wearing shorts, my bare leg contacting the chrome bumper of the vehicle as I tightened battery connections. When I touched my metal wrench to the positive (ungrounded) side of the 12-volt battery, I could feel a tingling sensation at the point where my leg was touching the bumper. The combination of firm contact with metal and my sweaty skin made it possible to feel a shock with only 12 volts of electrical potential.

Thankfully, nothing bad happened, but had the engine been running and the shock felt at my hand instead of my leg, I might have reflexively jerked my arm into the path of the rotating fan, or dropped the metal wrench across the battery terminals (producing *large* amounts of current through the wrench with lots of accompanying sparks). This illustrates another important lesson regarding electrical safety; that electric current itself may be an indirect cause of injury by causing you to jump or spasm parts of your body into harm's way.

The path current takes through the human body makes a difference as to how harmful it is. Current will affect whatever muscles are in its path, and since the heart and lung (diaphragm) muscles are probably the most critical to one's survival, shock paths traversing the chest are the most dangerous. This makes the hand-to-hand shock current path a very likely mode of injury and fatality.

To guard against such an occurrence, it is advisable to only use one hand to work on live circuits of hazardous voltage, keeping the other hand tucked into a pocket so as to not accidentally touch anything. Of course, it is *always* safer to work on a circuit when it is unpowered, but this is not always practical or possible. For one-handed work, the right hand is generally preferred over the left for two reasons: most people are right-handed (thus granting additional coordination when working), and the heart is usually situated to the left of center in the chest cavity.

For those who are left-handed, this advice may not be the best. If such a person is sufficiently uncoordinated with their right hand, they may be placing themselves in greater danger by using the hand they're least comfortable with, even if shock current through that hand might present more of a hazard to their heart. The relative hazard between shock through one hand or the other is probably less than the hazard of working with less than optimal coordination, so the choice of which hand to work with is best left to the individual.

The best protection against shock from a live circuit is resistance, and resistance can be added to the body through the use of insulated tools, gloves, boots, and other gear. Current in a circuit is a function of available voltage divided by the *total* resistance in the path of the flow. As we will investigate in greater detail later in this book, resistances have an additive effect when they're stacked up so that there's only one path for electrons to flow:

Now we'll see an equivalent circuit for a person wearing insulated gloves and boots:

Because electric current must pass through the boot *and* the body *and* the glove to complete its circuit back to the battery, the combined total (*sum*) of these resistances opposes the flow of electrons to a greater degree than any of the resistances considered individually.

Safety is one of the reasons electrical wires are usually covered with plastic or rubber insulation: to vastly increase the amount of resistance between the conductor and whoever or whatever might contact it. Unfortunately, it would be prohibitively expensive to enclose power line conductors in sufficient insulation to provide safety in case of accidental contact, so safety is maintained by keeping those lines far enough out of reach so that no one can accidentally touch them.

Review

- Harm to the body is a function of the amount of shock current. Higher voltage allows for the production of higher, more dangerous currents. Resistance opposes current, making high resistance a good protective measure against shock.
- Any voltage above 30 is generally considered to be capable of delivering dangerous shock currents.
- Metal jewelry is definitely bad to wear when working around electric circuits. Rings, watchbands, necklaces, bracelets, and other such adornments provide excellent electrical contact with your body, and can conduct current themselves enough to produce skin burns, even with low voltages.
- Low voltages can still be dangerous even if they're too low to directly cause shock injury. They may be enough to startle the victim, causing them to jerk back and contact something more dangerous in the near vicinity.
- When necessary to work on a "live" circuit, it is best to perform the work with one hand so as to prevent a deadly hand-to-hand (through the chest) shock current path.

This page titled 3.4: Ohm's Law (again) is shared under a GNU Free Documentation License 1.3 license and was authored, remixed, and/or curated by Tony R. Kuphaldt (All About Circuits) via source content that was edited to the style and standards of the LibreTexts platform.

3.5: Safe Practices

Securing something in a Zero Energy State means ridding it of any sort of potential or stored energy, including but not limited to:

- Dangerous voltage
- Spring pressure
- Hydraulic (liquid) pressure
- Pneumatic (air) pressure
- Suspended weight
- Chemical energy (flammable or otherwise reactive substances)
- Nuclear energy (radioactive or fissile substances)

Voltage by its very nature is a manifestation of potential energy. In the first chapter I even used elevated liquid as an analogy for the potential energy of voltage, having the capacity (potential) to produce current (flow), but not necessarily realizing that potential until a suitable path for flow has been established, and resistance to flow is overcome. A pair of wires with high voltage between them do not look or sound dangerous even though they harbor enough potential energy between them to push deadly amounts of current through your body. Even though that voltage isn't presently doing anything, it has the potential to, and that potential must be neutralized before it is safe to physically contact those wires.

All properly designed circuits have "disconnect" switch mechanisms for securing voltage from a circuit. Sometimes these "disconnects" serve a dual purpose of automatically opening under excessive current conditions, in which case we call them "circuit breakers." Other times, the disconnecting switches are strictly manually-operated devices with no automatic function. In either case, they are there for your protection and must be used properly. Please note that the disconnect device should be separate from the regular switch used to turn the device on and off. It is a safety switch, to be used only for securing the system in a Zero Energy State:

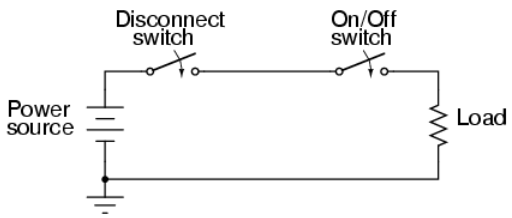

With the disconnect switch in the "open" position as shown (no continuity), the circuit is broken and no current will exist. There will be zero voltage across the load, and the full voltage of the source will be dropped across the open contacts of the disconnect switch. Note how there is no need for a disconnect switch in the lower conductor of the circuit. Because that side of the circuit is firmly connected to the earth (ground), it is electrically common with the earth and is best left that way. For maximum safety of personnel working on the load of this circuit, a temporary ground connection could be established on the top side of the load, to ensure that no voltage could ever be dropped across the load:

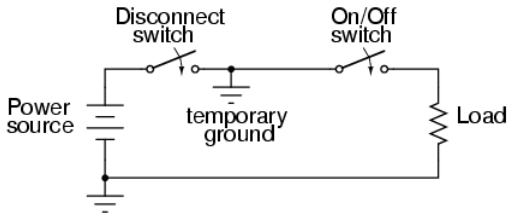

With the temporary ground connection in place, both sides of the load wiring are connected to ground, securing a Zero Energy State at the load.

Since a ground connection made on both sides of the load is electrically equivalent to short-circuiting across the load with a wire, that is another way of accomplishing the same goal of maximum safety:

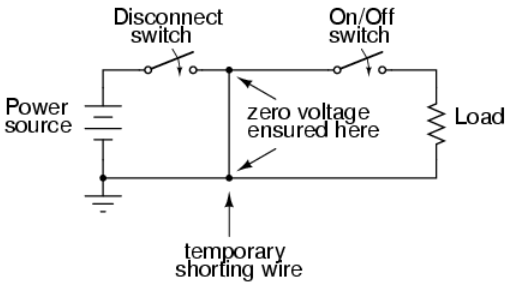

Either way, both sides of the load will be electrically common to the earth, allowing for no voltage (potential energy) between either side of the load and the ground people stand on. This technique of temporarily grounding conductors in a de-energized power system is very common in maintenance work performed on high voltage power distribution systems.

A further benefit of this precaution is protection against the possibility of the disconnect switch being closed (turned “on” so that circuit continuity is established) while people are still contacting the load. The temporary wire connected across the load would create a short-circuit when the disconnect switch was closed, immediately tripping any overcurrent protection devices (circuit breakers or fuses) in the circuit, which would shut the power off again. Damage may very well be sustained by the disconnect switch if this were to happen, but the workers at the load are kept safe.

It would be good to mention at this point that overcurrent devices are not intended to provide protection against electric shock. Rather, they exist solely to protect conductors from overheating due to excessive currents. The temporary shorting wires just described would indeed cause any overcurrent devices in the circuit to “trip” if the disconnect switch were to be closed, but realize that electric shock protection is not the intended function of those devices. Their primary function would merely be leveraged for the purpose of worker protection with the shorting wire in place.

Since it is obviously important to be able to secure any disconnecting devices in the open (off) position and make sure they stay that way while work is being done on the circuit, there is a need for a structured safety system to be put into place. Such a system is commonly used in industry and it is called *Lock-out/Tag-out*.

A lock-out/tag-out procedure works like this: all individuals working on a secured circuit have their own personal padlock which they set on the control lever of a disconnect device prior to working on the system. Additionally, they must fill out and sign a tag which they hang from their lock describing the nature and duration of the work they intend to perform on the system. If there are multiple sources of energy to be “locked out” (multiple disconnects, both electrical and mechanical energy sources to be secured, etc.), the worker must use as many of his or her locks as necessary to secure power from the system before work begins. This way, the system is maintained in a Zero Energy State until every last lock is removed from all the disconnect and shutoff devices, and that means every last worker gives consent by removing their own personal locks. If the decision is made to re-energize the system and one person’s lock(s) still remain in place after everyone present removes theirs, the tag(s) will show who that person is and what it is they’re doing.

Even with a good lock-out/tag-out safety program in place, there is still a need for diligence and common-sense precaution. This is especially true in industrial settings where a multitude of people may be working on a device or system at once. Some of those people might not know about proper lock-out/tag-out procedure, or might know about it but are too complacent to follow it. Don’t assume that everyone has followed the safety rules!

After an electrical system has been locked out and tagged with your own personal lock, you must then double-check to see if the voltage really has been secured in a zero state. One way to check is to see if the machine (or whatever it is that’s being worked on) will start up if the *Start* switch or button is actuated. If it starts, then you know you haven’t successfully secured the electrical power from it.

Additionally, you should *always* check for the presence of dangerous voltage with a measuring device before actually touching any conductors in the circuit. To be safest, you should follow this procedure of checking, using, and then checking your meter:

- Check to see that your meter indicates properly on a known source of voltage.
- Use your meter to test the locked-out circuit for any dangerous voltage.
- Check your meter once more on a known source of voltage to see that it still indicates as it should.

While this may seem excessive or even paranoid, it is a proven technique for preventing electrical shock. I once had a meter fail to indicate voltage when it should have while checking a circuit to see if it was “dead.” Had I not used other means to check for the presence of voltage, I might not be alive today to write this. There’s always the chance that your voltage meter will be defective just when you need it to check for a dangerous condition. Following these steps will help ensure that you’re never misled into a deadly situation by a broken meter.

Finally, the electrical worker will arrive at a point in the safety check procedure where it is deemed safe to actually touch the conductor(s). Bear in mind that after all of the precautionary steps have been taken, it is still possible (although very unlikely) that a dangerous voltage may be present. One final precautionary measure to take at this point is to make momentary contact with the conductor(s) *with the back of the hand* before grasping it or a metal tool in contact with it. Why? If, for some reason, there is still voltage present between that conductor and earth ground, finger motion from the shock reaction (clenching into a fist) will *break contact* with the conductor. Please note that this is absolutely the *last* step that any electrical worker should ever take before beginning work on a power system, and should *never* be used as an alternative method of checking for dangerous voltage. If you ever have reason to doubt the trustworthiness of your meter, use another meter to obtain a “second opinion.”

Review

- *Zero Energy State*: When a circuit, device, or system has been secured so that no potential energy exists to harm someone working on it.
- Disconnect switch devices must be present in a properly designed electrical system to allow for convenient readiness of a Zero Energy State.
- Temporary grounding or shorting wires may be connected to a load being serviced for extra protection to personnel working on that load.
- *Lock-out/Tag-out* works like this: when working on a system in a Zero Energy State, the worker places a personal padlock on every energy disconnect device relevant to his or her task on that system. Also, a tag is hung on every one of those locks describing the nature and duration of the work to be done, and who is doing it.
- Always verify that a circuit has been secured in a Zero Energy State with test equipment after “locking it out.” Be sure to test your meter before and after checking the circuit to verify that it is working properly.
- When the time comes to actually make contact with the conductor(s) of a supposedly dead power system, do so first with the back of one hand, so that if a shock should occur, the muscle reaction will pull the fingers away from the conductor.

This page titled 3.5: Safe Practices is shared under a GNU Free Documentation License 1.3 license and was authored, remixed, and/or curated by Tony R. Kuphaldt (All About Circuits) via source content that was edited to the style and standards of the LibreTexts platform.

3.6: Emergency Response

If you see someone lying unconscious or “froze on the circuit,” the very first thing to do is shut off the power by opening the appropriate disconnect switch or circuit breaker. If someone touches another person being shocked, there may be enough voltage dropped across the body of the victim to shock the would-be rescuer, thereby “freezing” two people instead of one. Don’t be a hero. Electrons don’t respect heroism. Make sure the situation is safe for you to step into, or else you *will* be the next victim, and nobody will benefit from your efforts.

One problem with this rule is that the source of power may not be known, or easily found in time to save the victim of shock. If a shock victim’s breathing and heartbeat are paralyzed by electric current, their survival time is very limited. If the shock current is of sufficient magnitude, their flesh and internal organs may be quickly roasted by the power the current dissipates as it runs through their body.

If the power disconnect switch cannot be located quickly enough, it may be possible to dislodge the victim from the circuit they’re frozen on to by prying them or hitting them away with a dry wooden board or piece of nonmetallic conduit, common items to be found in industrial construction scenes. Another item that could be used to safely drag a “frozen” victim away from contact with power is an extension cord. By looping a cord around their torso and using it as a rope to pull them away from the circuit, their grip on the conductor(s)may be broken. Bear in mind that the victim will be holding on to the conductor with all their strength, so pulling them away probably won’t be easy!

Once the victim has been safely disconnected from the source of electric power, the immediate medical concerns for the victim should be respiration and circulation (breathing and pulse). If the rescuer is trained in CPR, they should follow the appropriate steps of checking for breathing and pulse, then applying CPR as necessary to keep the victim’s body from deoxygenating. The cardinal rule of CPR is to *keep going* until you have been relieved by qualified personnel.

If the victim is conscious, it is best to have them lie still until qualified emergency response personnel arrive on the scene. There is the possibility of the victim going into a state of physiological shock—a condition of insufficient blood circulation different from electrical shock—and so they should be kept as warm and comfortable as possible. An electrical shock insufficient to cause immediate interruption of the heartbeat may be strong enough to cause heart irregularities or a heart attack up to several hours later, so the victim should pay close attention to their own condition after the incident, ideally under supervision.

Review

- A person being shocked needs to be disconnected from the source of electrical power. Locate the disconnecting switch/breaker and turn it off. Alternatively, if the disconnecting device cannot be located, the victim can be pried or pulled from the circuit by an insulated object such as a dry wood board, piece of nonmetallic conduit, or rubber electrical cord.
- Victims need immediate medical response: check for breathing and pulse, then apply CPR as necessary to maintain oxygenation.
- If a victim is still conscious after having been shocked, they need to be closely monitored and cared for until trained emergency response personnel arrive. There is danger of physiological shock, so keep the victim warm and comfortable.
- Shock victims may suffer heart trouble up to several hours after being shocked. The danger of electric shock does not end after the immediate medical attention.

This page titled 3.6: Emergency Response is shared under a GNU Free Documentation License 1.3 license and was authored, remixed, and/or curated by Tony R. Kuphaldt (All About Circuits) via source content that was edited to the style and standards of the LibreTexts platform.

3.7: Common Sources of Hazard

The easiest way to decrease skin resistance is to get it wet. Therefore, touching electrical devices with wet hands, wet feet, or especially in a sweaty condition (salt water is a much better conductor of electricity than fresh water) is dangerous. In the household, the bathroom is one of the more likely places where wet people may contact electrical appliances, and so shock hazard is a definite threat there. Good bathroom design will locate power receptacles away from bathtubs, showers, and sinks to discourage the use of appliances nearby. Telephones that plug into a wall socket are also sources of hazardous voltage (the open circuit voltage is 48 volts DC, and the ringing signal is 150 volts AC—remember that any voltage over 30 is considered potentially dangerous!). Appliances such as telephones and radios should never, ever be used while sitting in a bathtub. Even battery-powered devices should be avoided. Some battery-operated devices employ voltage-increasing circuitry capable of generating lethal potentials.

Swimming pools are another source of trouble, since people often operate radios and other powered appliances nearby. The National Electrical Code requires that special shock-detecting receptacles called Ground-Fault Current Interrupting (GFI or GFCI) be installed in wet and outdoor areas to help prevent shock incidents. More on these devices in a later section of this chapter. These special devices have no doubt saved many lives, but they can be no substitute for common sense and diligent precaution. As with firearms, the best “safety” is an informed and conscientious operator.

Extension cords, so commonly used at home and in industry, are also sources of potential hazard. All cords should be regularly inspected for abrasion or cracking of insulation, and repaired immediately. One sure method of removing a damaged cord from service is to unplug it from the receptacle, then cut off that plug (the “male” plug) with a pair of side-cutting pliers to ensure that no one can use it until it is fixed. This is important on jobsites, where many people share the same equipment, and not all people there may be aware of the hazards.

Any power tool showing evidence of electrical problems should be immediately serviced as well. I’ve heard several horror stories of people who continue to work with hand tools that periodically shock them. Remember, *electricity can kill*, and the death it brings can be gruesome. Like extension cords, a bad power tool can be removed from service by unplugging it and cutting off the plug at the end of the cord.

Downed power lines are an obvious source of electric shock hazard and should be avoided at all costs. The voltages present between power lines or between a power line and earth ground are typically very high (2400 volts being one of the lowest voltages used in residential distribution systems). If a power line is broken and the metal conductor falls to the ground, the immediate result will usually be a tremendous amount of arcing (sparks produced), often enough to dislodge chunks of concrete or asphalt from the road surface, and reports rivaling that of a rifle or shotgun. To come into direct contact with a downed power line is almost sure to cause death, but other hazards exist which are not so obvious.

When a line touches the ground, current travels between that downed conductor and the nearest grounding point in the system, thus establishing a circuit:

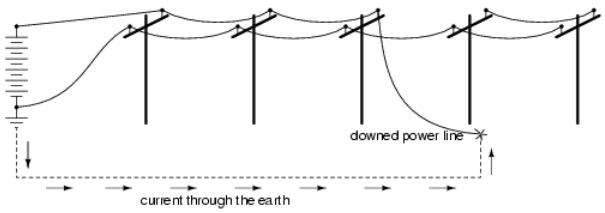

The earth, being a conductor (if only a poor one), will conduct current between the downed line and the nearest system ground point, which will be some kind of conductor buried in the ground for good contact. Being that the earth is a much poorer conductor of electricity than the metal cables strung along the power poles, there will be substantial voltage dropped between the point of cable contact with the ground and the grounding conductor, and little voltage dropped along the length of the cabling (the following figures are *very* approximate):

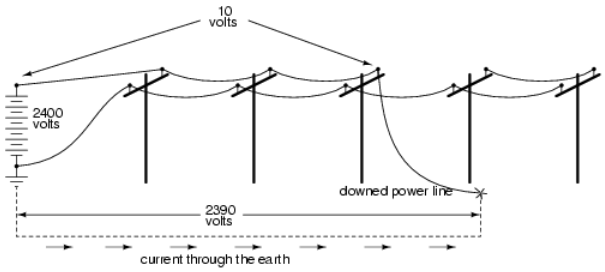

If the distance between the two ground contact points (the downed cable and the system ground) is small, there will be substantial voltage dropped along short distances between the two points. Therefore, a person standing on the ground between those two points will be in danger of receiving an electric shock by intercepting a voltage between their two feet!

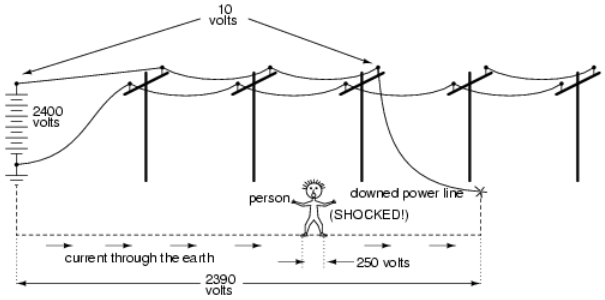

Again, these voltage figures are very approximate, but they serve to illustrate a potential hazard: that a person can become a victim of electric shock from a downed power line without even coming into contact with that line!

One practical precaution a person could take if they see a power line falling towards the ground is to only contact the ground at one point, either by running away (when you run, only one foot contacts the ground at any given time), or if there's nowhere to run, by standing on one foot. Obviously, if there's somewhere safer to run, running is the best option. By eliminating two points of contact with the ground, there will be no chance of applying deadly voltage across the body through both legs.

Review

- Wet conditions increase risk of electric shock by lowering skin resistance.
- Immediately replace worn or damaged extension cords and power tools. You can prevent innocent use of a bad cord or tool by cutting the male plug off the cord (while its unplugged from the receptacle, of course).
- Power lines are very dangerous and should be avoided at all costs. If you see a line about to hit the ground, stand on one foot or run (only one foot contacting the ground) to prevent shock from voltage dropped across the ground between the line and the system ground point.

This page titled 3.7: Common Sources of Hazard is shared under a GNU Free Documentation License 1.3 license and was authored, remixed, and/or curated by Tony R. Kuphaldt (All About Circuits) via source content that was edited to the style and standards of the LibreTexts platform.

3.8: Safe Circuit Design

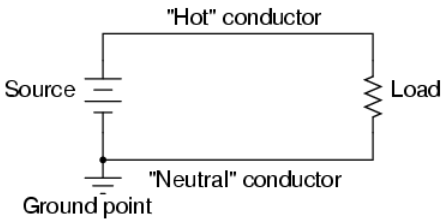

As far as the voltage source and load are concerned, grounding makes no difference at all. It exists purely for the sake of personnel safety, by guaranteeing that at least one point in the circuit will be safe to touch (zero voltage to ground). The “Hot” side of the circuit, named for its potential for shock hazard, will be dangerous to touch unless voltage is secured by proper disconnection from the source (ideally, using a systematic lock-out/tag-out procedure).

This imbalance of hazard between the two conductors in a simple power circuit is important to understand. The following series of illustrations are based on common household wiring systems (using DC voltage sources rather than AC for simplicity).

If we take a look at a simple, household electrical appliance such as a toaster with a conductive metal case, we can see that there should be no shock hazard when it is operating properly. The wires conducting power to the toaster’s heating element are insulated from touching the metal case (and each other) by rubber or plastic.

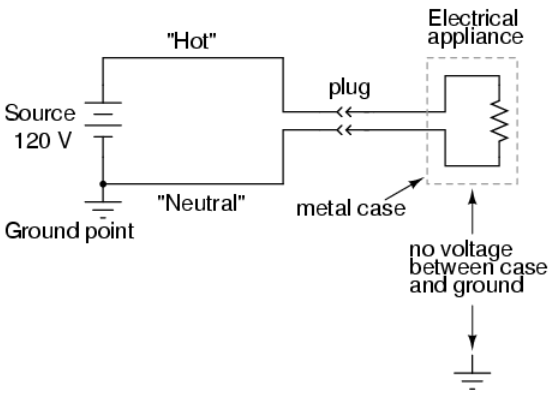

However, if one of the wires inside the toaster were to accidentally come in contact with the metal case, the case will be made electrically common to the wire, and touching the case will be just as hazardous as touching the wire bare. Whether or not this presents a shock hazard depends on *which* wire accidentally touches:

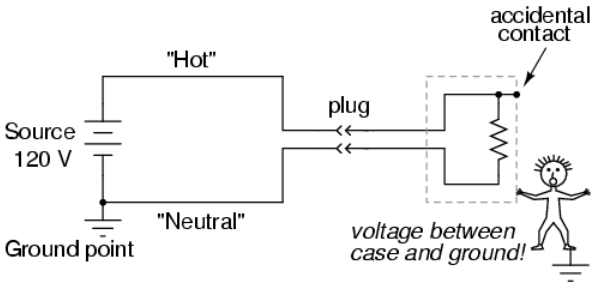

If the “hot” wire contacts the case, it places the user of the toaster in danger. On the other hand, if the neutral wire contacts the case, there is no danger of shock:

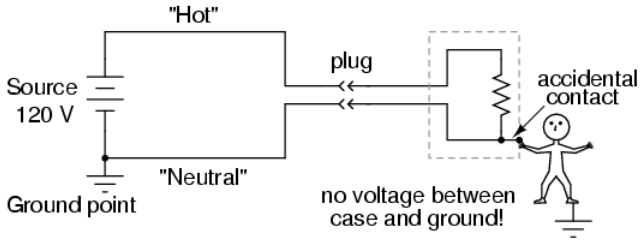

To help ensure that the former failure is less likely than the latter, engineers try to design appliances in such a way as to minimize hot conductor contact with the case. Ideally, of course, you don't want either wire accidentally coming in contact with the conductive case of the appliance, but there are usually ways to design the layout of the parts to make accidental contact less likely for one wire than for the other. However, this preventative measure is effective only if power plug polarity can be guaranteed. If the plug can be reversed, then the conductor more likely to contact the case might very well be the "hot" one:

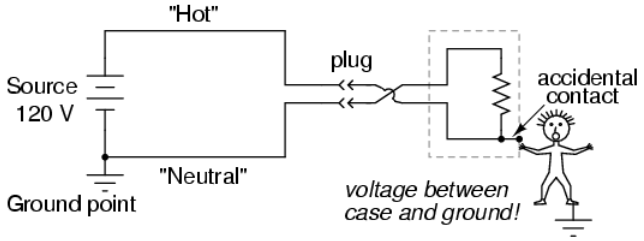

Appliances designed this way usually come with "polarized" plugs, one prong of the plug being slightly narrower than the other. Power receptacles are also designed like this, one slot being narrower than the other. Consequently, the plug cannot be inserted "backwards," and conductor identity inside the appliance can be guaranteed. Remember that this has no effect whatsoever on the basic function of the appliance: its strictly for the sake of user safety.

Some engineers address the safety issue simply by making the outside case of the appliance nonconductive. Such appliances are called *double-insulated*, since the insulating case serves as a second layer of insulation above and beyond that of the conductors themselves. If a wire inside the appliance accidently comes in contact with the case, there is no danger presented to the user of the appliance.

Other engineers tackle the problem of safety by maintaining a conductive case, but using a third conductor to firmly connect that case to ground:

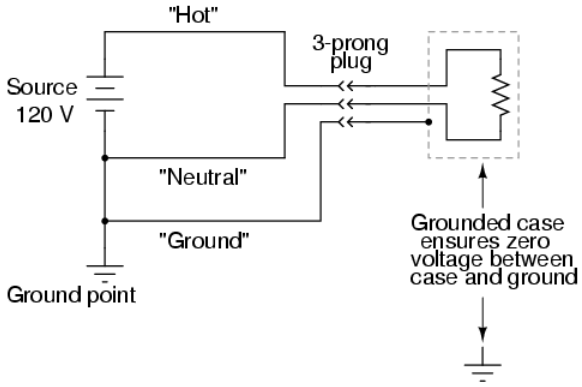

The third prong on the power cord provides a direct electrical connection from the appliance case to earth ground, making the two points electrically common with each other. If they're electrically common, then there cannot be any voltage dropped between them. At least, that's how it is supposed to work. If the hot conductor accidently touches the metal appliance case, it will create a direct short-circuit back to the voltage source through the ground wire, tripping any overcurrent protection devices. The user of the appliance will remain safe.

This is why its so important never to cut the third prong off a power plug when trying to fit it into a two-prong receptacle. If this is done, there will be no grounding of the appliance case to keep the user(s) safe. The appliance will still function properly, but if there is an internal fault bringing the hot wire in contact with the case, the results can be deadly. If a two-prong receptacle *must* be used, a two- to three-prong receptacle adapter can be installed with a grounding wire attached to the receptacle's grounded cover screw. This will maintain the safety of the grounded appliance while plugged in to this type of receptacle.

Electrically safe engineering doesn't necessarily end at the load, however. A final safeguard against electrical shock can be arranged on the power supply side of the circuit rather than the appliance itself. This safeguard is called *ground-fault detection*, and it works like this:

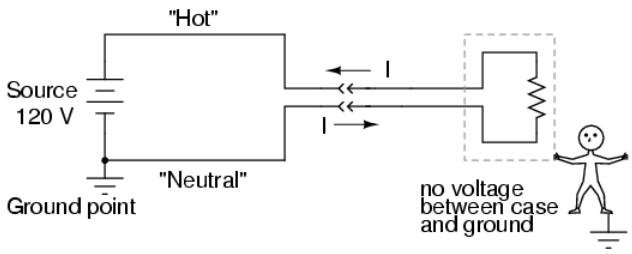

In a properly functioning appliance (shown above), the current measured through the hot conductor should be exactly equal to the current through the neutral conductor, because there's only one path for electrons to flow in the circuit. With no fault inside the appliance, there is no connection between circuit conductors and the person touching the case, and therefore no shock.

If, however, the hot wire accidentally contacts the metal case, there will be current through the person touching the case. The presence of a shock current will be manifested as a *difference* of current between the two power conductors at the receptacle:

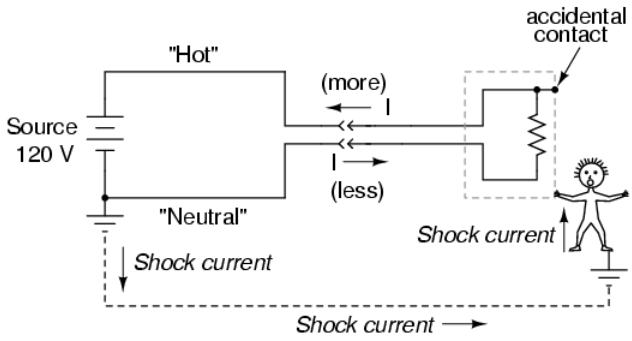

This difference in current between the "hot" and "neutral" conductors will only exist if there is current through the ground connection, meaning that there is a fault in the system. Therefore, such a current difference can be used as a way to *detect* a fault condition. If a device is set up to measure this difference of current between the two power conductors, a detection of current imbalance can be used to trigger the opening of a disconnect switch, thus cutting power off and preventing serious shock:

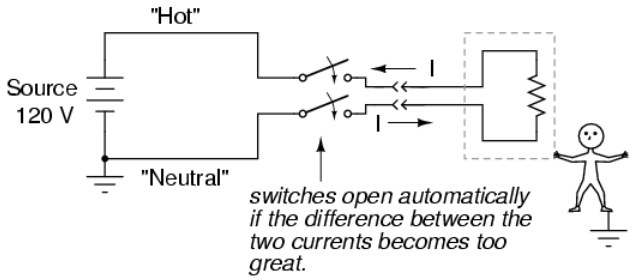

Such devices are called *Ground Fault Current Interruptors*, or GFCIs for short. Outside North America, the GFCI is variously known as a safety switch, a residual current device (RCD), an RCBO or RCD/MCB if combined with a miniature circuit breaker, or earth leakage circuit breaker (ELCB). They are compact enough to be built into a power receptacle. These receptacles are easily identified by their distinctive "Test" and "Reset" buttons. The big advantage with using this approach to ensure safety is that it

works regardless of the appliance's design. Of course, using a double-insulated or grounded appliance in addition to a GFCI receptacle would be better yet, but its comforting to know that something can be done to improve safety above and beyond the design and condition of the appliance.

The *arc fault circuit interrupter (AFCI)*, a circuit breaker designed to prevent fires, is designed to open on intermittent resistive short circuits. For example, a normal 15 A breaker is designed to open circuit quickly if loaded well beyond the 15 A rating, more slowly a little beyond the rating. While this protects against direct shorts and several seconds of overload, respectively, it does not protect against arcs– similar to arc-welding. An arc is a highly variable load, repetitively peaking at over 70 A, open circuiting with alternating current zero-crossings. Though, the average current is not enough to trip a standard breaker, it is enough to start a fire. This arc could be created by a metalic short circuit which burns the metal open, leaving a resistive sputtering plasma of ionized gases.

The AFCI contains electronic circuitry to sense this intermittent resistive short circuit. It protects against both hot to neutral and hot to ground arcs. The AFCI does not protect against personal shock hazards like a GFCI does. Thus, GFCIs still need to be installed in kitchen, bath, and outdoors circuits. Since the AFCI often trips upon starting large motors, and more generally on brushed motors, its installation is limited to bedroom circuits by the U.S. National Electrical code. Use of the AFCI should reduce the number of electrical fires. However, nuisance-trips when running appliances with motors on AFCI circuits is a problem.

Review

- Power systems often have one side of the voltage supply connected to earth ground to ensure safety at that point.
- The "grounded" conductor in a power system is called the *neutral* conductor, while the ungrounded conductor is called the *hot*.
- Grounding in power systems exists for the sake of personnel safety, not the operation of the load(s).
- Electrical safety of an appliance or other load can be improved by good engineering: polarized plugs, double insulation, and three-prong "grounding" plugs are all ways that safety can be maximized on the load side.
- *Ground Fault Current Interruptors* (GFCIs) work by sensing a difference in current between the two conductors supplying power to the load. There should be no difference in current at all. Any difference means that current must be entering or exiting the load by some means other than the two main conductors, which is not good. A significant current difference will automatically open a disconnecting switch mechanism, cutting power off completely.

This page titled 3.8: Safe Circuit Design is shared under a GNU Free Documentation License 1.3 license and was authored, remixed, and/or curated by Tony R. Kuphaldt (All About Circuits) via source content that was edited to the style and standards of the LibreTexts platform.

3.9: Safe Meter Usage

The most common piece of electrical test equipment is a meter called the *multimeter*. Multimeters are so named because they have the ability to measure a multiple of variables: voltage, current, resistance, and often many others, some of which cannot be explained here due to their complexity. In the hands of a trained technician, the multimeter is both an efficient work tool and a safety device. In the hands of someone ignorant and/or careless, however, the multimeter may become a source of danger when connected to a "live" circuit.

There are many different brands of multimeters, with multiple models made by each manufacturer sporting different sets of features. The multimeter shown here in the following illustrations is a "generic" design, not specific to any manufacturer, but general enough to teach the basic principles of use:

Multimeter

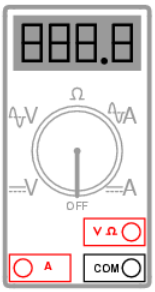

You will notice that the display of this meter is of the "digital" type: showing numerical values using four digits in a manner similar to a digital clock. The rotary selector switch (now set in the *Off* position) has five different measurement positions it can be set in: two "V" settings, two "A" settings, and one setting in the middle with a funny-looking "horseshoe" symbol on it representing "resistance." The "horseshoe" symbol is the Greek letter "Omega" (Ω), which is the common symbol for the electrical unit of ohms.

Of the two "V" settings and two "A" settings, you will notice that each pair is divided into unique markers with either a pair of horizontal lines (one solid, one dashed), or a dashed line with a squiggly curve over it. The parallel lines represent "DC" while the squiggly curve represents "AC." The "V" of course stands for "voltage" while the "A" stands for "amperage" (current). The meter uses different techniques, internally, to measure DC than it uses to measure AC, and so it requires the user to select which type of voltage (V) or current (A) is to be measured. Although we haven't discussed alternating current (AC) in any technical detail, this distinction in meter settings is an important one to bear in mind.

There are three different sockets on the multimeter face into which we can plug our *test leads*. Test leads are nothing more than specially-prepared wires used to connect the meter to the circuit under test. The wires are coated in a color-coded (either black or red) flexible insulation to prevent the user's hands from contacting the bare conductors, and the tips of the probes are sharp, stiff pieces of wire:

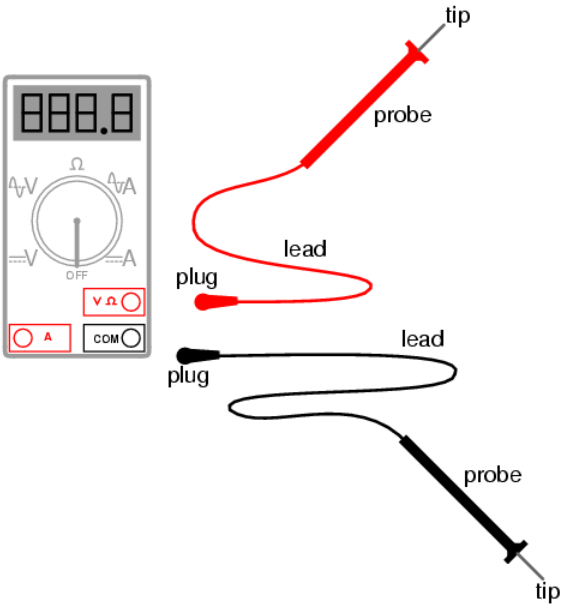

The black test lead *always* plugs into the black socket on the multimeter: the one marked "COM" for "common." The red test lead plugs into either the red socket marked for voltage and resistance, or the red socket marked for current, depending on which quantity you intend to measure with the multimeter.

To see how this works, let's look at a couple of examples showing the meter in use. First, we'll set up the meter to measure DC voltage from a battery:

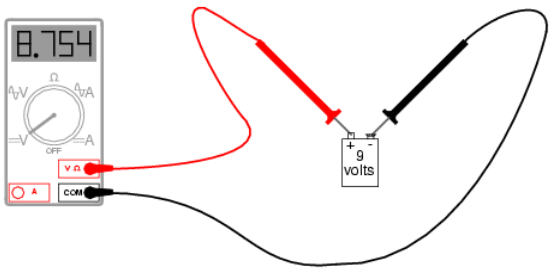

Note that the two test leads are plugged into the appropriate sockets on the meter for voltage, and the selector switch has been set for DC "V". Now, we'll take a look at an example of using the multimeter to measure AC voltage from a household electrical power receptacle (wall socket):

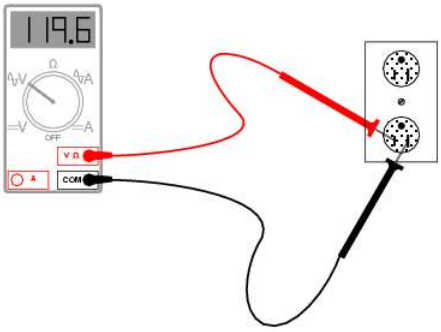

The only difference in the setup of the meter is the placement of the selector switch: it is now turned to AC "V". Since we're still measuring voltage, the test leads will remain plugged in the same sockets. In both of these examples, it is *imperative* that you not let the probe tips come in contact with one another while they are both in contact with their respective points on the circuit. If this happens, a short-circuit will be formed, creating a spark and perhaps even a ball of flame if the voltage source is capable of supplying enough current! The following image illustrates the potential for hazard:

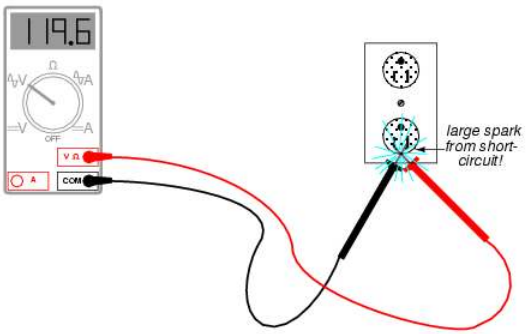

This is just one of the ways that a meter can become a source of hazard if used improperly.

Voltage measurement is perhaps the most common function a multimeter is used for. It is certainly the primary measurement taken for safety purposes (part of the lock-out/tag-out procedure), and it should be well understood by the operator of the meter. Being that voltage is always relative between two points, the meter *must* be firmly connected to two points in a circuit before it will provide a reliable measurement. That usually means both probes must be grasped by the user's hands and held against the proper contact points of a voltage source or circuit while measuring.

Because a hand-to-hand shock current path is the most dangerous, holding the meter probes on two points in a high-voltage circuit in this manner is always a *potential* hazard. If the protective insulation on the probes is worn or cracked, it is possible for the user's fingers to come into contact with the probe conductors during the time of test, causing a bad shock to occur. If it is possible to use only one hand to grasp the probes, that is a safer option. Sometimes it is possible to "latch" one probe tip onto the circuit test point so that it can be let go of and the other probe set in place, using only one hand. Special probe tip accessories such as spring clips can be attached to help facilitate this.

Remember that meter test leads are part of the whole equipment package, and that they should be treated with the same care and respect that the meter itself is. If you need a special accessory for your test leads, such as a spring clip or other special probe tip, consult the product catalog of the meter manufacturer or other test equipment manufacturer. *Do not* try to be creative and make your own test probes, as you may end up placing yourself in danger the next time you use them on a live circuit.

Also, it must be remembered that digital multimeters usually do a good job of discriminating between AC and DC measurements, as they are set for one or the other when checking for voltage or current. As we have seen earlier, both AC and DC voltages and currents can be deadly, so when using a multimeter as a safety check device you should always check for the presence of both AC and DC, even if you're not expecting to find both! Also, when checking for the presence of hazardous voltage, you should be sure to check *all* pairs of points in question.

For example, suppose that you opened up an electrical wiring cabinet to find three large conductors supplying AC power to a load. The circuit breaker feeding these wires (supposedly) has been shut off, locked, and tagged. You double-checked the absence of power by pressing the *Start* button for the load. Nothing happened, so now you move on to the third phase of your safety check: the meter test for voltage.

First, you check your meter on a known source of voltage to see that its working properly. Any nearby power receptacle should provide a convenient source of AC voltage for a test. You do so and find that the meter indicates as it should. Next, you need to check for voltage among these three wires in the cabinet. But voltage is measured between *two* points, so where do you check?

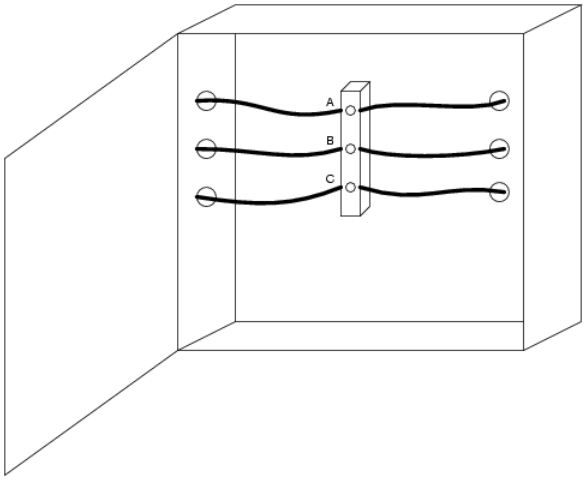

The answer is to check between all combinations of those three points. As you can see, the points are labeled “A”, “B”, and “C” in the illustration, so you would need to take your multimeter (set in the voltmeter mode) and check between points A & B, B & C, and A & C. If you find voltage between any of those pairs, the circuit is not in a Zero Energy State. But wait! Remember that a multimeter will not register DC voltage when its in the AC voltage mode and vice versa, so you need to check those three pairs of points in *each mode* for a total of six voltage checks in order to be complete!

However, even with all that checking, we still haven’t covered all possibilities yet. Remember that hazardous voltage can appear between a single wire and ground (in this case, the metal frame of the cabinet would be a good ground reference point) in a power system. So, to be perfectly safe, we not only have to check between A & B, B & C, and A & C (in both AC and DC modes), but we also have to check between A & ground, B & ground, and C & ground (in both AC and DC modes)! This makes for a grand total of twelve voltage checks for this seemingly simple scenario of only three wires. Then, of course, after we’ve completed all these checks, we need to take our multimeter and re-test it against a known source of voltage such as a power receptacle to ensure that its still in good working order.

Using a multimeter to check for resistance is a much simpler task. The test leads will be kept plugged in the same sockets as for the voltage checks, but the selector switch will need to be turned until it points to the “horseshoe” resistance symbol. Touching the probes across the device whose resistance is to be measured, the meter should properly display the resistance in ohms:

One very important thing to remember about measuring resistance is that it must only be done on *de-energized* components! When the meter is in “resistance” mode, it uses a small internal battery to generate a tiny current through the component to be measured. By sensing how difficult it is to move this current through the component, the resistance of that component can be determined and displayed. If there is any additional source of voltage in the meter-lead-component-lead-meter loop to either aid or oppose the resistance-measuring current produced by the meter, faulty readings will result. In a worse-case situation, the meter may even be damaged by the external voltage.

The “resistance” mode of a multimeter is very useful in determining wire continuity as well as making precise measurements of resistance. When there is a good, solid connection between the probe tips (simulated by touching them together), the meter shows almost zero Ω. If the test leads had no resistance in them, it would read exactly zero:

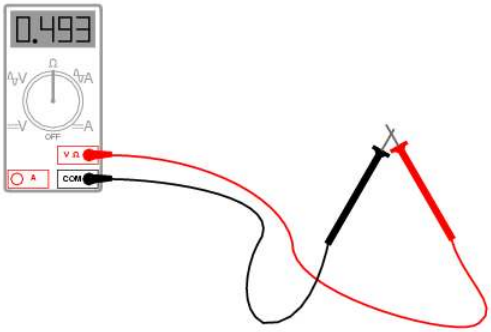

If the leads are not in contact with each other, or touching opposite ends of a broken wire, the meter will indicate infinite resistance (usually by displaying dashed lines or the abbreviation “O.L.” which stands for “open loop”):

By far the most hazardous and complex application of the multimeter is in the measurement of current. The reason for this is quite simple: in order for the meter to measure current, the current to be measured must be forced to go *through* the meter. This means that the meter must be made part of the current path of the circuit rather than just be connected off to the side somewhere as is the case when measuring voltage. In order to make the meter part of the current path of the circuit, the original circuit must be “broken” and the meter connected across the two points of the open break. To set the meter up for this, the selector switch must point to either AC or DC “A” and the red test lead must be plugged in the red socket marked “A”. The following illustration shows a meter all ready to measure current and a circuit to be tested:

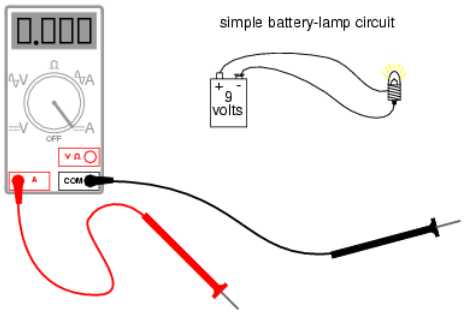

Now, the circuit is broken in preparation for the meter to be connected:

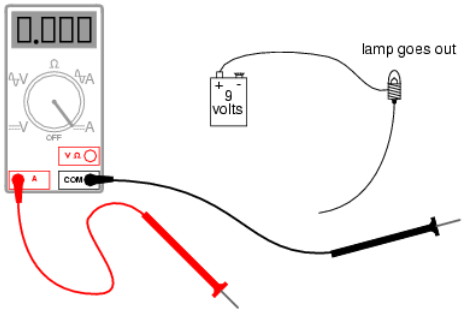

The next step is to insert the meter in-line with the circuit by connecting the two probe tips to the broken ends of the circuit, the black probe to the negative (-) terminal of the 9-volt battery and the red probe to the loose wire end leading to the lamp:

This example shows a very safe circuit to work with. 9 volts hardly constitutes a shock hazard, and so there is little to fear in breaking this circuit open (bare handed, no less!) and connecting the meter in-line with the flow of electrons. However, with higher power circuits, this could be a hazardous endeavor indeed. Even if the circuit voltage was low, the normal current could be high enough that an injurious spark would result the moment the last meter probe connection was established.

Another potential hazard of using a multimeter in its current-measuring ("ammeter") mode is failure to properly put it back into a voltage-measuring configuration before measuring voltage with it. The reasons for this are specific to ammeter design and operation. When measuring circuit current by placing the meter directly in the path of current, it is best to have the meter offer little or no resistance against the flow of electrons. Otherwise, any additional resistance offered by the meter would impede the electron flow and alter the circuits operation. Thus, the multimeter is designed to have practically zero ohms of resistance between the test probe tips when the red probe has been plugged into the red "A" (current-measuring) socket. In the voltage-measuring mode (red lead plugged into the red "V" socket), there are many mega-ohms of resistance between the test probe tips, because voltmeters are designed to have close to infinite resistance (so that they *don't* draw any appreciable current from the circuit under test).

When switching a multimeter from current- to voltage-measuring mode, its easy to spin the selector switch from the "A" to the "V" position and forget to correspondingly switch the position of the red test lead plug from "A" to "V". The result—if the meter is then connected across a source of substantial voltage—will be a short-circuit through the meter!

To help prevent this, most multimeters have a warning feature by which they beep if ever there's a lead plugged in the "A" socket and the selector switch is set to "V". As convenient as features like these are, though, they are still no substitute for clear thinking and caution when using a multimeter.

All good-quality multimeters contain fuses inside that are engineered to "blow" in the event of excessive current through them, such as in the case illustrated in the last image. Like all overcurrent protection devices, these fuses are primarily designed to *protect the equipment* (in this case, the meter itself) from excessive damage, and only secondarily to protect the user from harm. A multimeter can be used to check its own current fuse by setting the selector switch to the resistance position and creating a connection between the two red sockets like this:

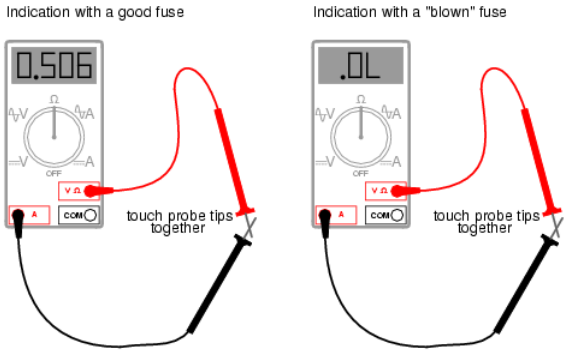

A good fuse will indicate very little resistance while a blown fuse will always show "O.L." (or whatever indication that model of multimeter uses to indicate no continuity). The actual number of ohms displayed for a good fuse is of little consequence, so long as its an arbitrarily low figure.

So now that we've seen how to use a multimeter to measure voltage, resistance, and current, what more is there to know? Plenty! The value and capabilities of this versatile test instrument will become more evident as you gain skill and familiarity using it. There is no substitute for regular practice with complex instruments such as these, so feel free to experiment on safe, battery-powered circuits.

Review

- A meter capable of checking for voltage, current, and resistance is called a *multimeter*.
- As voltage is always relative between two points, a voltage-measuring meter ("voltmeter") must be connected to two points in a circuit in order to obtain a good reading. Be careful not to touch the bare probe tips together while measuring voltage, as this will create a short-circuit!
- Remember to always check for both AC and DC voltage when using a multimeter to check for the presence of hazardous voltage on a circuit. Make sure you check for voltage between all pair-combinations of conductors, including between the individual conductors and ground!
- When in the voltage-measuring ("voltmeter") mode, multimeters have very high resistance between their leads.

- Never try to read resistance or continuity with a multimeter on a circuit that is energized. At best, the resistance readings you obtain from the meter will be inaccurate, and at worst the meter may be damaged and you may be injured.
- Current measuring meters ("ammeters") are always connected in a circuit so the electrons have to flow *through* the meter.
- When in the current-measuring ("ammeter") mode, multimeters have practically no resistance between their leads. This is intended to allow electrons to flow through the meter with the least possible difficulty. If this were not the case, the meter would add extra resistance in the circuit, thereby affecting the current.

This page titled 3.9: Safe Meter Usage is shared under a GNU Free Documentation License 1.3 license and was authored, remixed, and/or curated by Tony R. Kuphaldt (All About Circuits) via source content that was edited to the style and standards of the LibreTexts platform.

3.10: Electric Shock Data

The table found in the Bussmann handbook differs slightly from the one available from MIT: for the DC threshold of perception (men), the MIT table gives 5.2 mA while the Bussmann table gives a slightly greater figure of 6.2 mA. Also, for the “unable to let go” 60 Hz AC threshold (men), the MIT table gives 20 mA while the Bussmann table gives a lesser figure of 16 mA. As I have yet to obtain a primary copy of Dalziel’s research, the figures cited here are conservative: I have listed the lowest values in my table where any data sources differ.

These differences, of course, are academic. The point here is that relatively small magnitudes of electric current through the body can be harmful if not lethal.

Data regarding the electrical resistance of body contact points was taken from a safety page (document 16.1) from the Lawrence Livermore National Laboratory (website [*]), citing Ralph H. Lee as the data source. Lee’s work was listed here in a document entitled “Human Electrical Sheet,” composed while he was an IEEE Fellow at E.I. duPont de Nemours & Co., and also in an article entitled “Electrical Safety in Industrial Plants” found in the June 1971 issue of *IEEE Spectrum* magazine.

For the morbidly curious, Charles Dalziel’s experimentation conducted at the University of California (Berkeley) began with a state grant to investigate the bodily effects of sub-lethal electric current. His testing method was as follows: healthy male and female volunteer subjects were asked to hold a copper wire in one hand and place their other hand on a round, brass plate. A voltage was then applied between the wire and the plate, causing electrons to flow through the subject’s arms and chest. The current was stopped, then resumed at a higher level. The goal here was to see how much current the subject could tolerate and still keep their hand pressed against the brass plate. When this threshold was reached, laboratory assistants forcefully held the subject’s hand in contact with the plate and the current was again increased. The subject was asked to release the wire they were holding, to see at what current level involuntary muscle contraction (tetanus) prevented them from doing so. For each subject the experiment was conducted using DC and also AC at various frequencies. Over two dozen human volunteers were tested, and later studies on heart fibrillation were conducted using animal subjects.

This page titled 3.10: Electric Shock Data is shared under a GNU Free Documentation License 1.3 license and was authored, remixed, and/or curated by Tony R. Kuphaldt (All About Circuits) via source content that was edited to the style and standards of the LibreTexts platform.

CHAPTER OVERVIEW

4: Scientific Notation And Metric Prefixes

- Topic hierarchy

4.1: Scientific Notation
4.2: Arithmetic with Scientific Notation
4.3: Metric Notation
4.4: Metric Prefix Conversions
4.5: Hand Calculator Use
4.6: Scientific Notation in SPICE

This page titled 4: Scientific Notation And Metric Prefixes is shared under a GNU Free Documentation License 1.3 license and was authored, remixed, and/or curated by Tony R. Kuphaldt (All About Circuits) via source content that was edited to the style and standards of the LibreTexts platform.

4.1: Scientific Notation

In many disciplines of science and engineering, very large and very small numerical quantities must be managed. Some of these quantities are mind-boggling in their size, either extremely small or extremely large. Take for example the mass of a proton, one of the constituent particles of an atom's nucleus:

Proton mass = 0.000000000000000000000000167 grams

Or, consider the number of electrons passing by a point in a circuit every second with a steady electric current of 1 amp:

1 amp = 6,250,000,000,000,000,000 electrons per second

A lot of zeros, isn't it? Obviously, it can get quite confusing to have to handle so many zero digits in numbers such as this, even with the help of calculators and computers.

Take note of those two numbers and of the relative sparsity of non-zero digits in them. For the mass of the proton, all we have is a "167" preceded by 23 zeros before the decimal point. For the number of electrons per second in 1 amp, we have "625" followed by 16 zeros. We call the span of non-zero digits (from first to last), plus any zero digits *not* merely used for placeholding, the "significant digits" of any number.

The significant digits in a real-world measurement are typically reflective of the accuracy of that measurement. For example, if we were to say that a car weighs 3,000 pounds, we probably don't mean that the car in question weighs *exactly* 3,000 pounds, but that we've rounded its weight to a value more convenient to say and remember. That rounded figure of 3,000 has only one significant digit: the "3" in front—the zeros merely serve as placeholders. However, if we were to say that the car weighed 3,005 pounds, the fact that the weight is not rounded to the nearest thousand pounds tells us that the two zeros in the middle aren't just placeholders, but that all four digits of the number "3,005" are significant to its representative accuracy. Thus, the number "3,005" is said to have *four* significant figures.

In like manner, numbers with many zero digits are not necessarily representative of a real-world quantity all the way to the decimal point. When this is known to be the case, such a number can be written in a kind of mathematical "shorthand" to make it easier to deal with. This "shorthand" is called *scientific notation*.

With scientific notation, a number is written by representing its significant digits as a quantity between 1 and 10 (or -1 and -10, for negative numbers), and the "placeholder" zeros are accounted for by a power-of-ten multiplier. For example:

1 amp = 6,250,000,000,000,000,000 electrons per second

. . . *can be expressed as* . . .

1 amp = 6.25×10^{18} electrons per second

10 to the 18th power (10^{18}) means 10 multiplied by itself 18 times, or a "1" followed by 18 zeros. Multiplied by 6.25, it looks like "625" followed by 16 zeros (take 6.25 and skip the decimal point 18 places to the right). The advantages of scientific notation are obvious: the number isn't as unwieldy when written on paper, and the significant digits are plain to identify.

But what about very small numbers, like the mass of the proton in grams? We can still use scientific notation, except with a negative power-of-ten instead of a positive one, to shift the decimal point to the left instead of to the right:

Proton mass = 0.000000000000000000000000167 grams

. . . can be expressed as . . .

Proton mass = 1.67×10^{-24} grams

10 to the -24th power (10^{-24}) means the inverse (1/x) of 10 multiplied by itself 24 times, or a “1” preceded by a decimal point and 23 zeros. Multiplied by 1.67, it looks like “167” preceded by a decimal point and 23 zeros. Just as in the case with the very large number, it is a lot easier for a human being to deal with this “shorthand” notation. As with the prior case, the significant digits in this quantity are clearly expressed.

Because the significant digits are represented “on their own,” away from the power-of-ten multiplier, it is easy to show a level of precision even when the number looks round. Taking our 3,000 pound car example, we could express the rounded number of 3,000 in scientific notation as such:

car weight = 3×10^3 pounds

If the car actually weighed 3,005 pounds (accurate to the nearest pound) and we wanted to be able to express that full accuracy of measurement, the scientific notation figure could be written like this:

car weight = 3.005×10^3 pounds

However, what if the car actually did weigh 3,000 pounds, exactly (to the nearest pound)? If we were to write its weight in “normal” form (3,000 lbs), it wouldn’t necessarily be clear that this number was indeed accurate to the nearest pound and not just rounded to the nearest thousand pounds, or to the nearest hundred pounds, or to the nearest ten pounds. Scientific notation, on the other hand, allows us to show that all four digits are significant with no misunderstanding:

car weight = 3.000×10^3 pounds

Since there would be no point in adding extra zeros to the right of the decimal point (placeholding zeros being unnecessary with scientific notation), we know those zeros *must* be significant to the precision of the figure.

This page titled 4.1: Scientific Notation is shared under a GNU Free Documentation License 1.3 license and was authored, remixed, and/or curated by Tony R. Kuphaldt (All About Circuits) via source content that was edited to the style and standards of the LibreTexts platform.

4.2: Arithmetic with Scientific Notation

The benefits of scientific notation do not end with ease of writing and expression of accuracy. Such notation also lends itself well to mathematical problems of multiplication and division. Let's say we wanted to know how many electrons would flow past a point in a circuit carrying 1 amp of electric current in 25 seconds. If we know the number of electrons per second in the circuit (which we do), then all we need to do is multiply that quantity by the number of seconds (25) to arrive at an answer of total electrons:

(6,250,000,000,000,000,000 electrons per second) x (25 seconds) =

156,250,000,000,000,000,000 electrons passing by in 25 seconds

Using scientific notation, we can write the problem like this:

(6.25 x 10^{18} electrons per second) x (25 seconds)

If we take the "6.25" and multiply it by 25, we get 156.25. So, the answer could be written as:

156.25 x 10^{18} electrons

However, if we want to hold to standard convention for scientific notation, we must represent the significant digits as a number between 1 and 10. In this case, we'd say "1.5625" multiplied by some power-of-ten. To obtain 1.5625 from 156.25, we have to skip the decimal point two places to the left. To compensate for this without changing the value of the number, we have to raise our power by two notches (10 to the 20th power instead of 10 to the 18th):

1.5625 x 10^{20} electrons

What if we wanted to see how many electrons would pass by in 3,600 seconds (1 hour)? To make our job easier, we could put the time in scientific notation as well:

(6.25 x 10^{18} electrons per second) x (3.6 x 10^{3} seconds)

To multiply, we must take the two significant sets of digits (6.25 and 3.6) and multiply them together; and we need to take the two powers-of-ten and multiply them together. Taking 6.25 times 3.6, we get 22.5. Taking 10^{18} times 10^{3}, we get 10^{21} (exponents with common base numbers add). So, the answer is:

22.5 x 10^{21} electrons

. . . or more properly . . .

2.25 x 10^{22} electrons

To illustrate how division works with scientific notation, we could figure that last problem "backwards" to find out how long it would take for that many electrons to pass by at a current of 1 amp:

(2.25 x 10^{22} electrons) / (6.25 x 10^{18} electrons per second)

Just as in multiplication, we can handle the significant digits and powers-of-ten in separate steps (remember that you subtract the exponents of divided powers-of-ten):

(2.25 / 6.25) x (10^{22} / 10^{18})

And the answer is: 0.36 x 10^{4}, or 3.6 x 10^{3}, seconds. You can see that we arrived at the same quantity of time (3600 seconds). Now, you may be wondering what the point of all this is when we have electronic calculators that can handle the math automatically. Well, back in the days of scientists and engineers using "slide rule" analog computers, these techniques were indispensable. The "hard" arithmetic (dealing with the significant digit figures) would be performed with the slide rule while the powers-of-ten could be figured without any help at all, being nothing more than simple addition and subtraction.

Review

- Significant digits are representative of the real-world accuracy of a number.
- Scientific notation is a "shorthand" method to represent very large and very small numbers in easily-handled form.

- When multiplying two numbers in scientific notation, you can multiply the two significant digit figures and arrive at a power-of-ten by adding exponents.
- When dividing two numbers in scientific notation, you can divide the two significant digit figures and arrive at a power-of-ten by subtracting exponents.

This page titled 4.2: Arithmetic with Scientific Notation is shared under a GNU Free Documentation License 1.3 license and was authored, remixed, and/or curated by Tony R. Kuphaldt (All About Circuits) via source content that was edited to the style and standards of the LibreTexts platform.

4.3: Metric Notation

The metric system, besides being a collection of measurement units for all sorts of physical quantities, is structured around the concept of scientific notation. The primary difference is that the powers-of-ten are represented with alphabetical prefixes instead of by literal powers-of-ten. The following number line shows some of the more common prefixes and their respective powers-of-ten:

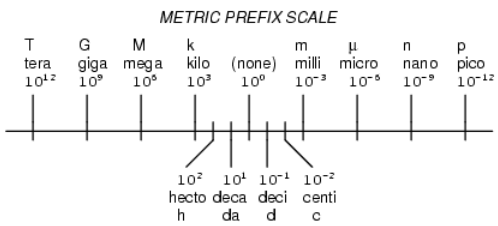

Looking at this scale, we can see that 2.5 Gigabytes would mean 2.5 x 10^9 bytes, or 2.5 billion bytes. Likewise, 3.21 picoamps would mean 3.21 x 10^{-12} amps, or 3.21 1/trillionths of an amp.

Other metric prefixes exist to symbolize powers of ten for extremely small and extremely large multipliers. On the extremely small end of the spectrum, *femto* (f) = 10^{-15}, *atto* (a) = 10^{-18}, *zepto* (z) = 10^{-21}, and *yocto*(y) = 10^{-24}. On the extremely large end of the spectrum, *Peta* (P) = 10^{15}, *Exa* (E) = 10^{18}, *Zetta* (Z) = 10^{21}, and *Yotta* (Y) = 10^{24}.

Because the major prefixes in the metric system refer to powers of 10 that are multiples of 3 (from “kilo” on up, and from “milli” on down), metric notation differs from regular scientific notation in that the mantissa can be anywhere between 1 and 999, depending on which prefix is chosen. For example, if a laboratory sample weighs 0.000267 grams, scientific notation and metric notation would express it differently:

2.67 x 10^{-4} grams (scientific notation)

267 µgrams (metric notation)

The same figure may also be expressed as 0.267 milligrams (0.267 mg), although it is usually more common to see the significant digits represented as a figure greater than 1.
In recent years a new style of metric notation for electric quantities has emerged which seeks to avoid the use of the decimal point. Since decimal points (”.”) are easily misread and/or “lost” due to poor print quality, quantities such as 4.7 k may be mistaken for 47 k. The new notation replaces the decimal point with the metric prefix character, so that “4.7 k” is printed instead as “4k7”. Our last figure from the prior example, “0.267 m”, would be expressed in the new notation as “0m267”.

Review

- The metric system of notation uses alphabetical prefixes to represent certain powers-of-ten instead of the lengthier scientific notation.

This page titled 4.3: Metric Notation is shared under a GNU Free Documentation License 1.3 license and was authored, remixed, and/or curated by Tony R. Kuphaldt (All About Circuits) via source content that was edited to the style and standards of the LibreTexts platform.

4.4: Metric Prefix Conversions

To express a quantity in a different metric prefix that what it was originally given, all we need to do is skip the decimal point to the right or to the left as needed. Notice that the metric prefix "number line" in the previous section was laid out from larger to smaller, left to right. This layout was purposely chosen to make it easier to remember which direction you need to skip the decimal point for any given conversion.

Example problem: express 0.000023 amps in terms of microamps.

0.000023 amps (has no prefix, just plain unit of amps)

From UNITS to micro on the number line is 6 places (powers of ten) to the right, so we need to skip the decimal point 6 places to the right:

0.000023 amps = 23. , or 23 microamps (µA)

Example problem: express 304,212 volts in terms of kilovolts.

304,212 volts (has no prefix, just plain unit of volts)

From the *(none)* place to *kilo* place on the number line is 3 places (powers of ten) to the left, so we need to skip the decimal point 3 places to the left:

304,212. = 304.212 kilovolts (kV)

Example problem: express 50.3 Mega-ohms in terms of milli-ohms.

50.3 M ohms (mega = 10^6)

From mega to milli is 9 places (powers of ten) to the right (from 10 to the 6th power to 10 to the -3rd power), so we need to skip the decimal point 9 places to the right:

50.3 M ohms = 50,300,000,000 milli-ohms (mΩ)

Review

- Follow the metric prefix number line to know which direction you skip the decimal point for conversion purposes.
- A number with no decimal point shown has an implicit decimal point to the immediate right of the furthest right digit (i.e. for the number 436 the decimal point is to the right of the 6, as such: 436.)

This page titled 4.4: Metric Prefix Conversions is shared under a GNU Free Documentation License 1.3 license and was authored, remixed, and/or curated by Tony R. Kuphaldt (All About Circuits) via source content that was edited to the style and standards of the LibreTexts platform.

4.5: Hand Calculator Use

Scientific Notation with a Hand Calculator

To enter numbers in scientific notation into a hand calculator, there is usually a button marked “E” or “EE” used to enter the correct power of ten. For example, to enter the mass of a proton in grams (1.67 x 10^{-24}grams) into a hand calculator, I would enter the following keystrokes:

```
[1] [.] [6] [7] [EE] [2] [4] [+/-]
```

The [+/-] keystroke changes the sign of the power (24) into a -24. Some calculators allow the use of the subtraction key [-] to do this, but I prefer the “change sign” [+/-] key because its more consistent with the use of that key in other contexts.

If I wanted to enter a negative number in scientific notation into a hand calculator, I would have to be careful how I used the [+/-] key, lest I change the sign of the power and not the significant digit value. Pay attention to this example:

Number to be entered: -3.221 x 10^{-15}:

```
[3] [.] [2] [2] [1] [+/-] [EE] [1] [5] [+/-]
```

The first [+/-] keystroke changes the entry from 3.221 to -3.221; the second [+/-] keystroke changes the power from 15 to -15.

Metric and Scientific Notation Display Modes

Displaying metric and scientific notation on a hand calculator is a different matter. It involves changing the display option from the normal “fixed” decimal point mode to the “scientific” or “engineering” mode. Your calculator manual will tell you how to set each display mode.

These display modes tell the calculator how to represent any number on the numerical readout. The actual value of the number is not affected in any way by the choice of display modes—only how the number appears to the calculator user. Likewise, the procedure for entering numbers into the calculator does not change with different display modes either. Powers of ten are usually represented by a pair of digits in the upper-right hand corner of the display, and are visible only in the “scientific” and “engineering” modes.

The difference between “scientific” and “engineering” display modes is the difference between scientific and metric notation. In “scientific” mode, the power-of-ten display is set so that the main number on the display is always a value between 1 and 10 (or -1 and -10 for negative numbers). In “engineering” mode, the powers-of-ten are set to display in multiples of 3, to represent the major metric prefixes. All the user has to do is memorize a few prefix/power combinations, and his or her calculator will be “speaking” metric!

```
POWER METRIC PREFIX ----- ------------ 12 ......... Tera (T) 9 .......... Giga (G) 6 .......... Mega (M)
3 .......... Kilo (k) 0 .......... UNITS (plain) -3 ......... milli (m) -6 ......... micro (u) -9
......... nano (n) -12 ........ pico (p)
```

Review

- Use the [EE] key to enter powers of ten.
- Use “scientific” or “engineering” to display powers of ten, in scientific or metric notation, respectively.

This page titled 4.5: Hand Calculator Use is shared under a GNU Free Documentation License 1.3 license and was authored, remixed, and/or curated by Tony R. Kuphaldt (All About Circuits) via source content that was edited to the style and standards of the LibreTexts platform.

4.6: Scientific Notation in SPICE

The SPICE circuit simulation computer program uses scientific notation to display its output information, and can interpret both scientific notation and metric prefixes in the circuit description files. If you are going to be able to successfully interpret the SPICE analyses throughout this book, you must be able to understand the notation used to express variables of voltage, current, etc. in the program.

Let's start with a very simple circuit composed of one voltage source (a battery) and one resistor:

To simulate this circuit using SPICE, we first have to designate node numbers for all the distinct points in the circuit, then list the components along with their respective node numbers so the computer knows which component is connected to which, and how. For a circuit of this simplicity, the use of SPICE seems like overkill, but it serves the purpose of demonstrating practical use of scientific notation:

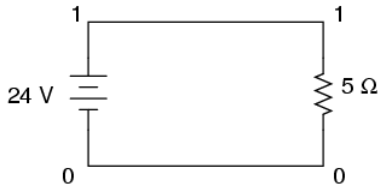

Typing out a circuit description file, or *netlist*, for this circuit, we get this:

```
simple circuit
v1 1 0 dc 24
r1 1 0 5
.end
```

The line "`v1 1 0 dc 24`" describes the battery, positioned between nodes 1 and 0, with a DC voltage of 24 volts. The line "`r1 1 0 5`" describes the 5 Ω resistor placed between nodes 1 and 0.

Using a computer to run a SPICE analysis on this circuit description file, we get the following results:

```
node   voltage
(  1)   24.0000
voltage source currents

name       current
v1       -4.800E+00

total power dissipation   1.15E+02  watts
```

SPICE tells us that the voltage "at" node number 1 (actually, this means the voltage between nodes 1 and 0, node 0 being the default reference point for all voltage measurements) is equal to 24 volts. The current through battery "v1" is displayed as -4.800E+00 amps. This is SPICE's method of denoting scientific notation. What its really saying is "-4.800 x 10^0 amps," or simply -4.800 amps. The negative value for current here is due to a quirk in SPICE and does not indicate anything significant about the circuit itself. The "total power dissipation" is given to us as 1.15E+02 watts, which means "1.15 x 10^2 watts," or 115 watts.

Let's modify our example circuit so that it has a 5 kΩ (5 kilo-ohm, or 5,000 ohm) resistor instead of a 5 Ω resistor and see what happens.

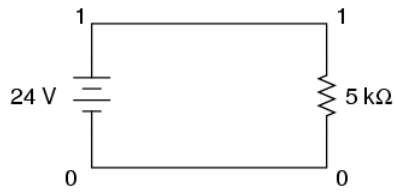

Once again is our circuit description file, or “netlist:”

```
simple circuit
v1 1 0 dc 24
r1 1 0 5k
.end
```

The letter “k” following the number 5 on the resistor’s line tells SPICE that it is a figure of 5 kΩ, not 5 Ω. Let’s see what result we get when we run this through the computer:

```
node   voltage
(  1)   24.0000
voltage source currents

name       current
v1        -4.800E-03

total power dissipation   1.15E-01  watts
```

The battery voltage, of course, hasn’t changed since the first simulation: its still at 24 volts. The circuit current, on the other hand, is much less this time because we’ve made the resistor a larger value, making it more difficult for electrons to flow. SPICE tells us that the current this time is equal to -4.800E-03 amps, or -4.800 x 10^{-3} amps. This is equivalent to taking the number -4.8 and skipping the decimal point three places to the left.

Of course, if we recognize that 10^{-3} is the same as the metric prefix “milli,” we could write the figure as -4.8 milliamps, or -4.8 mA.

Looking at the “total power dissipation” given to us by SPICE on this second simulation, we see that it is 1.15E-01 watts, or 1.15 x 10^{-1} watts. The power of -1 corresponds to the metric prefix “deci,” but generally we limit our use of metric prefixes in electronics to those associated with powers of ten that are multiples of three (ten to the power of . . . -12, -9, -6, -3, 3, 6, 9, 12, etc.). So, if we want to follow this convention, we must express this power dissipation figure as 0.115 watts or 115 milliwatts (115 mW) rather than 1.15 deciwatts (1.15 dW).

Perhaps the easiest way to convert a figure from scientific notation to common metric prefixes is with a scientific calculator set to the “engineering” or “metric” display mode. Just set the calculator for that display mode, type any scientific notation figure into it using the proper keystrokes (see your owner’s manual), press the “equals” or “enter” key, and it should display the same figure in engineering/metric notation.

Again, I’ll be using SPICE as a method of demonstrating circuit concepts throughout this book. Consequently, it is in your best interest to understand scientific notation so you can easily comprehend its output data format.

This page titled 4.6: Scientific Notation in SPICE is shared under a GNU Free Documentation License 1.3 license and was authored, remixed, and/or curated by Tony R. Kuphaldt (All About Circuits) via source content that was edited to the style and standards of the LibreTexts platform.

CHAPTER OVERVIEW

5: Series And Parallel Circuits

5.1: What are “Series” and “Parallel” Circuits?
5.2: Simple Series Circuits
5.3: Simple Parallel Circuits
5.4: Conductance
5.5: Power Calculations
5.6: Correct use of Ohm’s Law
5.7: Component Failure Analysis
5.8: Building Simple Resistor Circuits

This page titled 5: Series And Parallel Circuits is shared under a GNU Free Documentation License 1.3 license and was authored, remixed, and/or curated by Tony R. Kuphaldt (All About Circuits) via source content that was edited to the style and standards of the LibreTexts platform.

5.1: What are “Series” and “Parallel” Circuits?

Series and Parallel Circuits

There are two basic ways in which to connect more than two circuit components: *series* and *parallel*. First, an example of a series circuit:

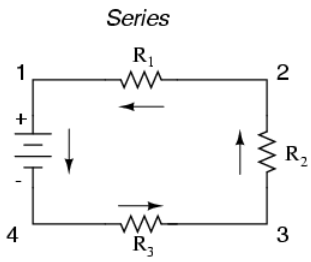

Here, we have three resistors (labeled R_1, R_2, and R_3), connected in a long chain from one terminal of the battery to the other. (It should be noted that the subscript labeling—those little numbers to the lower-right of the letter “R”—are unrelated to the resistor values in ohms. They serve only to identify one resistor from another.) The defining characteristic of a series circuit is that there is only one path for electrons to flow. In this circuit the electrons flow in a counter-clockwise direction, from point 4 to point 3 to point 2 to point 1 and back around to 4.

Now, let’s look at the other type of circuit, a parallel configuration:

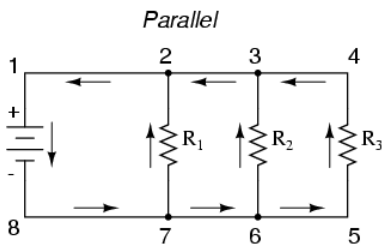

Again, we have three resistors, but this time they form more than one continuous path for electrons to flow. There’s one path from 8 to 7 to 2 to 1 and back to 8 again. There’s another from 8 to 7 to 6 to 3 to 2 to 1 and back to 8 again. And then there’s a third path from 8 to 7 to 6 to 5 to 4 to 3 to 2 to 1 and back to 8 again. Each individual path (through R_1, R_2, and R_3) is called a *branch*.

The defining characteristic of a parallel circuit is that all components are connected between the same set of electrically common points. Looking at the schematic diagram, we see that points 1, 2, 3, and 4 are all electrically common. So are points 8, 7, 6, and 5. Note that all resistors as well as the battery are connected between these two sets of points.

And, of course, the complexity doesn’t stop at simple series and parallel either! We can have circuits that are a combination of series and parallel, too:

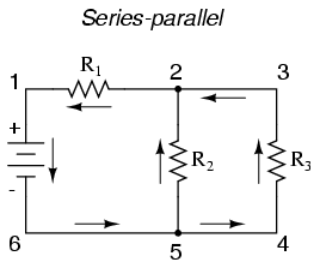

In this circuit, we have two loops for electrons to flow through: one from 6 to 5 to 2 to 1 and back to 6 again, and another from 6 to 5 to 4 to 3 to 2 to 1 and back to 6 again. Notice how both current paths go through R_1(from point 2 to point 1). In this configuration, we’d say that R_2 and R_3 are in parallel with each other, while R_1 is in series with the parallel combination of R_2 and R_3.

This is just a preview of things to come. Don't worry! We'll explore all these circuit configurations in detail, one at a time!

Learn the Basic Ideas of Series and Parallel Connection

The basic idea of a "series" connection is that components are connected end-to-end in a line to form a single path for electrons to flow:

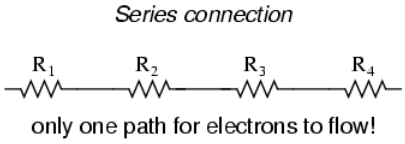

The basic idea of a "parallel" connection, on the other hand, is that all components are connected across each other's leads. In a purely parallel circuit, there are never more than two sets of electrically common points, no matter how many components are connected. There are many paths for electrons to flow, but only one voltage across all components:

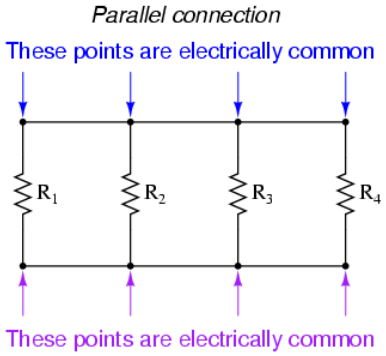

Series and parallel resistor configurations have very different electrical properties. We'll explore the properties of each configuration in the sections to come.

Review

- In a series circuit, all components are connected end-to-end, forming a single path for electrons to flow.
- In a parallel circuit, all components are connected across each other, forming exactly two sets of electrically common points.
- A "branch" in a parallel circuit is a path for electric current formed by one of the load components (such as a resistor).

This page titled 5.1: What are "Series" and "Parallel" Circuits? is shared under a GNU Free Documentation License 1.3 license and was authored, remixed, and/or curated by Tony R. Kuphaldt (All About Circuits) via source content that was edited to the style and standards of the LibreTexts platform.

5.2: Simple Series Circuits

Let's start with a series circuit consisting of three resistors and a single battery:

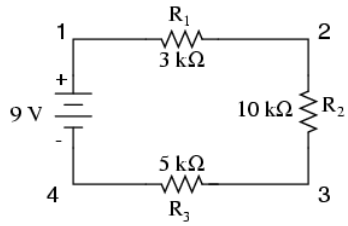

The first principle to understand about series circuits is that the amount of current is the same through any component in the circuit. This is because there is only one path for electrons to flow in a series circuit, and because free electrons flow through conductors like marbles in a tube, the rate of flow (marble speed) at any point in the circuit (tube) at any specific point in time must be equal.

Using Ohm's Law in Series Circuits

From the way that the 9-volt battery is arranged, we can tell that the electrons in this circuit will flow in a counter-clockwise direction, from point 4 to 3 to 2 to 1 and back to 4. However, we have one source of voltage and three resistances. How do we use Ohm's Law here?

An important caveat to Ohm's Law is that all quantities (voltage, current, resistance, and power) must relate to each other in terms of the same two points in a circuit. For instance, with a single-battery, single-resistor circuit, we could easily calculate any quantity because they all applied to the same two points in the circuit:

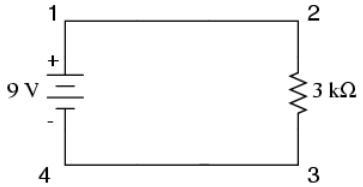

$$I = \frac{E}{R}$$

$$I = \frac{9 \text{ volts}}{3 \text{ k}\Omega} = 3 \text{ mA}$$

Since points 1 and 2 are connected together with wire of negligible resistance, as are points 3 and 4, we can say that point 1 is electrically common to point 2, and that point 3 is electrically common to point 4. Since we know we have 9 volts of electromotive force between points 1 and 4 (directly across the battery), and since point 2 is common to point 1 and point 3 common to point 4, we must also have 9 volts between points 2 and 3 (directly across the resistor). Therefore, we can apply Ohm's Law (I = E/R) to the current through the resistor, because we know the voltage (E) across the resistor and the resistance (R) of that resistor. All terms (E, I, R) apply to the same two points in the circuit, to that same resistor, so we can use the Ohm's Law formula with no reservation.

Using Ohm's Law in Circuits with Multiple Resistors

However, in circuits containing more than one resistor, we must be careful in how we apply Ohm's Law. In the three-resistor example circuit below, we know that we have 9 volts between points 1 and 4, which is the amount of electromotive force trying to push electrons through the series combination of R_1, R_2, and R_3. However, we cannot take the value of 9 volts and divide it by 3k, 10k or 5k Ω to try to find a current value, because we don't know how much voltage is across any one of those resistors, individually.

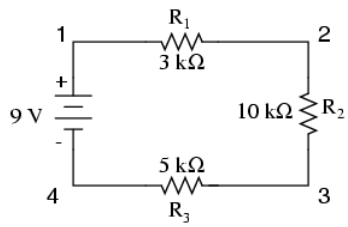

The figure of 9 volts is a *total* quantity for the whole circuit, whereas the figures of 3k, 10k, and 5k Ω are *individual* quantities for individual resistors. If we were to plug a figure for total voltage into an Ohm's Law equation with a figure for individual resistance, the result would not relate accurately to any quantity in the real circuit.

For R_1, Ohm's Law will relate the amount of voltage across R_1 with the current through R_1, given R_1's resistance, 3kΩ:

$$I_{R1} = \frac{E_{R1}}{3\ k\Omega} \qquad E_{R1} = I_{R1}(3\ k\Omega)$$

But, since we don't know the voltage across R_1 (only the total voltage supplied by the battery across the three-resistor series combination) and we don't know the current through R_1, we can't do any calculations with either formula. The same goes for R_2 and R_3: we can apply the Ohm's Law equations if and only if all terms are representative of their respective quantities between the same two points in the circuit.

So what can we do? We know the voltage of the source (9 volts) applied across the series combination of R_1, R_2, and R_3, and we know the resistance of each resistor, but since those quantities aren't in the same context, we can't use Ohm's Law to determine the circuit current. If only we knew what the *total* resistance was for the circuit: then we could calculate *total* current with our figure for *total* voltage (I=E/R).

This brings us to the second principle of series circuits: the total resistance of any series circuit is equal to the sum of the individual resistances. This should make intuitive sense: the more resistors in series that the electrons must flow through, the more difficult it will be for those electrons to flow. In the example problem, we had a 3 kΩ, 10 kΩ, and 5 kΩ resistor in series, giving us a total resistance of 18 kΩ:

$$R_{total} = R_1 + R_2 + R_3$$

$$R_{total} = 3\ k\Omega + 10\ k\Omega + 5\ k\Omega$$

$$R_{total} = 18\ k\Omega$$

In essence, we've calculated the equivalent resistance of R_1, R_2, and R_3 combined. Knowing this, we could re-draw the circuit with a single equivalent resistor representing the series combination of R_1, R_2, and R_3:

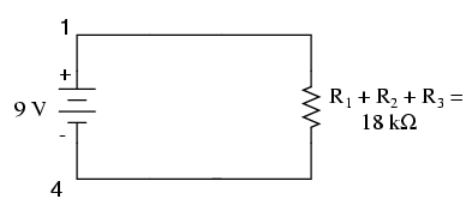

Calculating Circuit Current

Now we have all the necessary information to calculate circuit current because we have the voltage between points 1 and 4 (9 volts) and the resistance between points 1 and 4 (18 kΩ):

$$I_{total} = \frac{E_{total}}{R_{total}}$$

$$I_{total} = \frac{9\ volts}{18\ k\Omega} = 500\ \mu A$$

Knowing that current is equal through all components of a series circuit (and we just determined the current through the battery), we can go back to our original circuit schematic and note the current through each component:

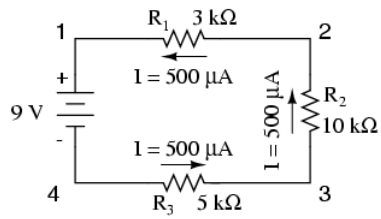

Now that we know the amount of current through each resistor, we can use Ohm's Law to determine the voltage drop across each one (applying Ohm's Law in its proper context):

$$E_{R1} = I_{R1} R_1 \qquad E_{R2} = I_{R2} R_2 \qquad E_{R3} = I_{R3} R_3$$

$$E_{R1} = (500\ \mu A)(3\ k\Omega) = 1.5\ V$$

$$E_{R2} = (500\ \mu A)(10\ k\Omega) = 5\ V$$

$$E_{R3} = (500\ \mu A)(5\ k\Omega) = 2.5\ V$$

Notice the voltage drops across each resistor, and how the sum of the voltage drops (1.5 + 5 + 2.5) is equal to the battery (supply) voltage: 9 volts. This is the third principle of series circuits: that the supply voltage is equal to the sum of the individual voltage drops.

However, the method we just used to analyze this simple series circuit can be streamlined for better understanding. By using a table to list all voltages, currents, and resistance in the circuit, it becomes very easy to see which of those quantities can be properly related in any Ohm's Law equation:

	R_1	R_2	R_3	Total	
E					Volts
I					Amps
R					Ohms
	Ohm's Law	*Ohm's Law*	*Ohm's Law*	*Ohm's Law*	

The rule with such a table is to apply Ohm's Law only to the values within each vertical column. For instance, E_{R1} only with I_{R1} and R_1; E_{R2} only with I_{R2} and R_2; etc. You begin your analysis by filling in those elements of the table that are given to you from the beginning:

	R_1	R_2	R_3	Total	
E				**9**	Volts
I					Amps
R	**3k**	**10k**	**5k**		Ohms

As you can see from the arrangement of the data, we can't apply the 9 volts of E_T (total voltage) to any of the resistances (R_1, R_2, or R_3) in any Ohm's Law formula because they're in different columns. The 9 volts of battery voltage is *not* applied directly across R_1, R_2, or R_3. However, we can use our "rules" of series circuits to fill in blank spots on a horizontal row. In this case, we can use the series rule of resistances to determine a total resistance from the *sum* of individual resistances:

	R_1	R_2	R_3	Total	
E				9	Volts
I					Amps
R	3k	10k	5k	**18k**	Ohms

Rule of series circuits
$R_T = R_1 + R_2 + R_3$

Now, with a value for total resistance inserted into the rightmost ("Total") column, we can apply Ohm's Law of I=E/R to total voltage and total resistance to arrive at a total current of 500 µA:

	R_1	R_2	R_3	Total	
E				9	Volts
I				**500µ**	Amps
R	3k	10k	5k	18k	Ohms

Ohm's Law

Then, knowing that the current is shared equally by all components of a series circuit (another "rule" of series circuits), we can fill in the currents for each resistor from the current figure just calculated:

	R_1	R_2	R_3	Total	
E				9	Volts
I	**500µ**	**500µ**	**500µ**	**500µ**	Amps
R	3k	10k	5k	18k	Ohms

Rule of series circuits
$I_T = I_1 = I_2 = I_3$

Finally, we can use Ohm's Law to determine the voltage drop across each resistor, one column at a time:

	R_1	R_2	R_3	Total	
E	**1.5**	**5**	**2.5**	9	Volts
I	500µ	500µ	500µ	500µ	Amps
R	3k	10k	5k	18k	Ohms

Ohm's Law *Ohm's Law* *Ohm's Law*

Verifying Calculations with Computer Analysis

Just for fun, we can use a computer to analyze this very same circuit automatically. It will be a good way to verify our calculations and also become more familiar with computer analysis. First, we have to describe the circuit to the computer in a format recognizable by the software. The SPICE program we'll be using requires that all electrically unique points in a circuit be numbered, and component placement is understood by which of those numbered points, or "nodes," they share. For clarity, I numbered the four corners of our example circuit 1 through 4. SPICE, however, demands that there be a node zero somewhere in the circuit, so I'll re-draw the circuit, changing the numbering scheme slightly:

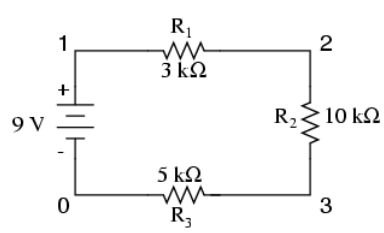

All I've done here is re-numbered the lower-left corner of the circuit 0 instead of 4. Now, I can enter several lines of text into a computer file describing the circuit in terms SPICE will understand, complete with a couple of extra lines of code directing the program to display voltage and current data for our viewing pleasure. This computer file is known as the *netlist* in SPICE terminology:

```
series circuit v1 1 0 r1 1 2 3k r2 2 3 10k r3 3 0 5k .dc v1 9 9 1 .print dc v(1,2) v(2,3) v(3,0) .end
```

Now, all I have to do is run the SPICE program to process the netlist and output the results:

```
v1 v(1,2) v(2,3) v(3) i(v1) 9.000E+00 1.500E+00 5.000E+00 2.500E+00 -5.000E-04
```

This printout is telling us the battery voltage is 9 volts, and the voltage drops across R_1, R_2, and R_3 are 1.5 volts, 5 volts, and 2.5 volts, respectively. Voltage drops across any component in SPICE are referenced by the node numbers the component lies between, so v(1,2) is referencing the voltage between nodes 1 and 2 in the circuit, which are the points between which R_1 is located. The order of node numbers is important: when SPICE outputs a figure for v(1,2), it regards the polarity the same way as if we were holding a voltmeter with the red test lead on node 1 and the black test lead on node 2. We also have a display showing current (albeit with a negative value) at 0.5 milliamps, or 500 microamps. So our mathematical analysis has been vindicated by the computer. This figure appears as a negative number in the SPICE analysis, due to a quirk in the way SPICE handles current calculations.

Review of Basic Series Circuit Characteristics

In summary, a series circuit is defined as having only one path for electrons to flow. From this definition, three rules of series circuits follow: all components share the same current; resistances add to equal a larger, total resistance; and voltage drops add to equal a larger, total voltage. All of these rules find root in the definition of a series circuit. If you understand that definition fully, then the rules are nothing more than footnotes to the definition.

Review

- Components in a series circuit share the same current: $I_{Total} = I_1 = I_2 = . . . I_n$
- Total resistance in a series circuit is equal to the sum of the individual resistances: $R_{Total} = R_1 + R_2 + . . . R_n$
- Total voltage in a series circuit is equal to the sum of the individual voltage drops: $E_{Total} = E_1 + E_2 + . . . E_n$

This page titled 5.2: Simple Series Circuits is shared under a GNU Free Documentation License 1.3 license and was authored, remixed, and/or curated by Tony R. Kuphaldt (All About Circuits) via source content that was edited to the style and standards of the LibreTexts platform.

5.3: Simple Parallel Circuits

Let's start with a parallel circuit consisting of three resistors and a single battery:

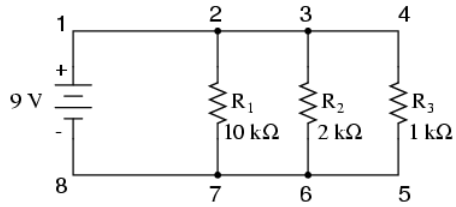

The Principle of Parallel Circuits

The first principle to understand about parallel circuits is that the voltage is equal across all components in the circuit. This is because there are only two sets of electrically common points in a parallel circuit, and voltage measured between sets of common points must always be the same at any given time. Therefore, in the above circuit, the voltage across R_1 is equal to the voltage across R_2 which is equal to the voltage across R_3 which is equal to the voltage across the battery. This equality of voltages can be represented in another table for our starting values:

	R_1	R_2	R_3	Total	
E	9	9	9	9	Volts
I					Amps
R	10k	2k	1k		Ohms

Ohm's Law Applications for Simple Parallel Circuits

Just as in the case of series circuits, the same caveat for Ohm's Law applies: values for voltage, current, and resistance must be in the same context in order for the calculations to work correctly. However, in the above example circuit, we can immediately apply Ohm's Law to each resistor to find its current because we know the voltage across each resistor (9 volts) and the resistance of each resistor:

$$I_{R1} = \frac{E_{R1}}{R_1} \qquad I_{R2} = \frac{E_{R2}}{R_2} \qquad I_{R3} = \frac{E_{R3}}{R_3}$$

$$I_{R1} = \frac{9\text{ V}}{10\text{ k}\Omega} = 0.9\text{ mA}$$

$$I_{R2} = \frac{9\text{ V}}{2\text{ k}\Omega} = 4.5\text{ mA}$$

$$I_{R3} = \frac{9\text{ V}}{1\text{ k}\Omega} = 9\text{ mA}$$

	R_1	R_2	R_3	Total	
E	9	9	9	9	Volts
I	**0.9m**	**4.5m**	**9m**		Amps
R	10k	2k	1k		Ohms
	Ohm's Law	*Ohm's Law*	*Ohm's Law*		

At this point we still don't know what the total current or total resistance for this parallel circuit is, so we can't apply Ohm's Law to the rightmost ("Total") column. However, if we think carefully about what is happening it should become apparent that the total current must equal the sum of all individual resistor ("branch") currents:

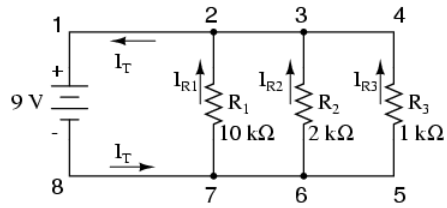

As the total current exits the negative (-) battery terminal at point 8 and travels through the circuit, some of the flow splits off at point 7 to go up through R_1, some more splits off at point 6 to go up through R_2, and the remainder goes up through R_3. Like a river branching into several smaller streams, the combined flow rates of all streams must equal the flow rate of the whole river. The same thing is encountered where the currents through R_1, R_2, and R_3 join to flow back to the positive terminal of the battery (+) toward point 1: the flow of electrons from point 2 to point 1 must equal the sum of the (branch) currents through R_1, R_2, and R_3.

This is the second principle of parallel circuits: the total circuit current is equal to the sum of the individual branch currents. Using this principle, we can fill in the I_T spot on our table with the sum of I_{R1}, I_{R2}, and I_{R3}:

	R_1	R_2	R_3	Total	
E	9	9	9	9	Volts
I	0.9m	4.5m	9m	**14.4m**	Amps
R	10k	2k	1k		Ohms

Rule of parallel circuits

$I_{total} = I_1 + I_2 + I_3$

Finally, applying Ohm's Law to the rightmost ("Total") column, we can calculate the total circuit resistance:

	R_1	R_2	R_3	Total	
E	9	9	9	9	Volts
I	0.9m	4.5m	9m	14.4m	Amps
R	10k	2k	1k	**625**	Ohms

$$R_{total} = \frac{E_{total}}{I_{total}} = \frac{9\text{ V}}{14.4\text{ mA}} = 625\ \Omega$$

Ohm's Law

The Equation for Parallel Circuits

Please note something very important here. The total circuit resistance is only 625 Ω: *less* than any one of the individual resistors. In the series circuit, where the total resistance was the sum of the individual resistances, the total was bound to be *greater* than any one of the resistors individually. Here in the parallel circuit, however, the opposite is true: we say that the individual resistances *diminish* rather than *add* to make the total. This principle completes our triad of "rules" for parallel circuits, just as series circuits were found to have three rules for voltage, current, and resistance. Mathematically, the relationship between total resistance and individual resistances in a parallel circuit looks like this:

$$R_{total} = \frac{1}{\frac{1}{R_1} + \frac{1}{R_2} + \frac{1}{R_3}}$$

The same basic form of equation works for *any* number of resistors connected together in parallel, just add as many 1/R terms on the denominator of the fraction as needed to accommodate all parallel resistors in the circuit.

Just as with the series circuit, we can use computer analysis to double-check our calculations. First, of course, we have to describe our example circuit to the computer in terms it can understand. I'll start by re-drawing the circuit:

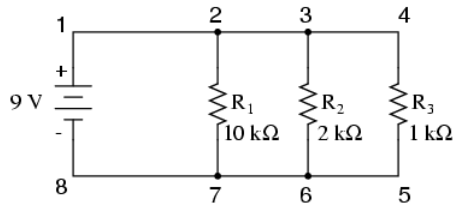

How to Alter Parallel Circuit Numbering Schemes for SPICE

Once again we find that the original numbering scheme used to identify points in the circuit will have to be altered for the benefit of SPICE. In SPICE, all electrically common points must share identical node numbers. This is how SPICE knows what's connected to what, and how. In a simple parallel circuit, all points are electrically common in one of two sets of points. For our example circuit, the wire connecting the tops of all the components will have one node number and the wire connecting the bottoms of the components will have the other. Staying true to the convention of including zero as a node number, I choose the numbers 0 and 1:

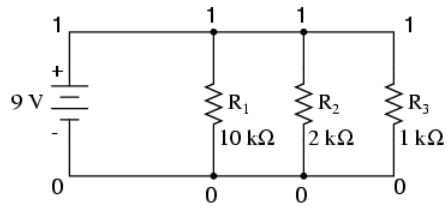

An example like this makes the rationale of node numbers in SPICE fairly clear to understand. By having all components share common sets of numbers, the computer "knows" they're all connected in parallel with each other.

In order to display branch currents in SPICE, we need to insert zero-voltage sources in line (in series) with each resistor, and then reference our current measurements to those sources. For whatever reason, the creators of the SPICE program made it so that current could only be calculated *through* a voltage source. This is a somewhat annoying demand of the SPICE simulation program. With each of these "dummy" voltage sources added, some new node numbers must be created to connect them to their respective branch resistors:

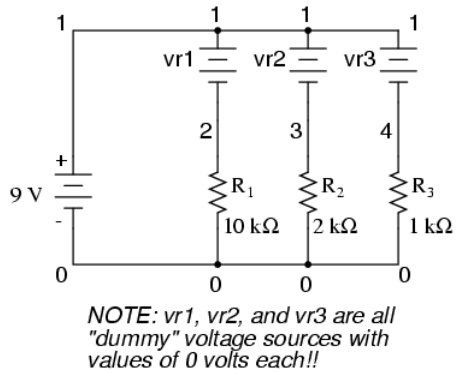

How to Verify Computer Analysis Results

The dummy voltage sources are all set at 0 volts so as to have no impact on the operation of the circuit. The circuit description file, or *netlist*, looks like this:

```
Parallel circuit v1 1 0 r1 2 0 10k r2 3 0 2k r3 4 0 1k vr1 1 2 dc 0 vr2 1 3 dc 0 vr3 1 4 dc 0 .dc v1 9 9 1
.print dc v(2,0) v(3,0) v(4,0) .print dc i(vr1) i(vr2) i(vr3) .end
```

Running the computer analysis, we get these results (I've annotated the printout with descriptive labels):

```
v1 v(2) v(3) v(4) 9.000E+00 9.000E+00 9.000E+00 9.000E+00 battery R1 voltage R2 voltage R3 voltage voltage
v1 i(vr1) i(vr2) i(vr3) 9.000E+00 9.000E-04 4.500E-03 9.000E-03 battery R1 current R2 current R3 current v
oltage
```

These values do indeed match those calculated through Ohm's Law earlier: 0.9 mA for I_{R1}, 4.5 mA for I_{R2}, and 9 mA for I_{R3}. Being connected in parallel, of course, all resistors have the same voltage dropped across them (9 volts, same as the battery).

Three Rules of Parallel Circuits

In summary, a parallel circuit is defined as one where all components are connected between the same set of electrically common points. Another way of saying this is that all components are connected across each other's terminals. From this definition, three rules of parallel circuits follow: all components share the same voltage; resistances diminish to equal a smaller, total resistance; and branch currents add to equal a larger, total current. Just as in the case of series circuits, all of these rules find root in the definition of a parallel circuit. If you understand that definition fully, then the rules are nothing more than footnotes to the definition.

Review

- Components in a parallel circuit share the same voltage: $E_{Total} = E_1 = E_2 = . . . E_n$
- Total resistance in a parallel circuit is *less* than any of the individual resistances: $R_{Total} = 1 / (1/R_1 + 1/R_2 + . . . 1/R_n)$
- Total current in a parallel circuit is equal to the sum of the individual branch currents: $I_{Total} = I_1 + I_2 + . . . I_n$.

This page titled 5.3: Simple Parallel Circuits is shared under a GNU Free Documentation License 1.3 license and was authored, remixed, and/or curated by Tony R. Kuphaldt (All About Circuits) via source content that was edited to the style and standards of the LibreTexts platform.

5.4: Conductance

When students first see the parallel resistance equation, the natural question to ask is, “Where did *that* thing come from?” It is truly an odd piece of arithmetic, and its origin deserves a good explanation.

What is the Difference Between Resistance and Conductance?

Resistance, by definition, is the measure of *friction* a component presents to the flow of electrons through it. Resistance is symbolized by the capital letter “R” and is measured in the unit of “ohm.” However, we can also think of this electrical property in terms of its inverse: how *easy* it is for electrons to flow through a component, rather than how *difficult*. If *resistance* is the word we use to symbolize the measure of how difficult it is for electrons to flow, then a good word to express how easy it is for electrons to flow would be *conductance*.

Mathematically, conductance is the reciprocal, or inverse, of resistance:

$$\text{Conductance} = \frac{1}{\text{Resistance}}$$

The greater the resistance, the less the conductance, and vice versa. This should make intuitive sense, resistance and conductance being opposite ways to denote the same essential electrical property. If two components’ resistances are compared and it is found that component “A” has one-half the resistance of component “B,” then we could alternatively express this relationship by saying that component “A” is *twice*as conductive as component “B.” If component “A” has but one-third the resistance of component “B,” then we could say it is *three times* more conductive than component “B,” and so on.

Carrying this idea further, a symbol and unit were created to represent conductance. The symbol is the capital letter “G” and the unit is the *mho*, which is “ohm” spelled backwards (and you didn’t think electronics engineers had any sense of humor!). Despite its appropriateness, the unit of the mho was replaced in later years by the unit of *siemens* (abbreviated by the capital letter “S”). This decision to change unit names is reminiscent of the change from the temperature unit of degrees *Centigrade* to degrees *Celsius*, or the change from the unit of frequency *c.p.s.* (cycles per second) to *Hertz*. If you’re looking for a pattern here, Siemens, Celsius, and Hertz are all surnames of famous scientists, the names of which, sadly, tell us less about the nature of the units than the units’ original designations.

As a footnote, the unit of siemens is never expressed without the last letter “s.” In other words, there is no such thing as a unit of “siemen” as there is in the case of the “ohm” or the “mho.” The reason for this is the proper spelling of the respective scientists’ surnames. The unit for electrical resistance was named after someone named “Ohm,” whereas the unit for electrical conductance was named after someone named “Siemens,” therefore it would be improper to “singularize” the latter unit as its final “s” does not denote plurality.

Back to our parallel circuit example, we should be able to see that multiple paths (branches) for current reduces total resistance for the whole circuit, as electrons are able to flow easier through the whole network of multiple branches than through any one of those branch resistances alone. In terms of *resistance*, additional branches result in a lesser total (current meets with less opposition). In terms of *conductance*, however, additional branches results in a greater total (electrons flow with greater conductance):

Total Parallel Resistance

Total parallel resistance is *less* than any one of the individual branch resistances because parallel resistors resist less together than they would separately:

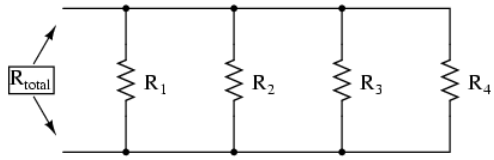

R_{total} is less than R_1, R_2, R_3, or R_4 individually

Total Parallel Conductance

Total parallel conductance is *greater* than any of the individual branch conductances because parallel resistors conduct better together than they would separately:

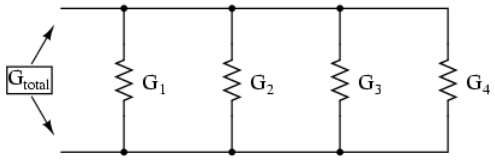

G_{total} is greater than G_1, G_2, G_3, or G_4 individually

To be more precise, the total conductance in a parallel circuit is equal to the sum of the individual conductances:

$$G_{total} = G_1 + G_2 + G_3 + G_4$$

If we know that conductance is nothing more than the mathematical reciprocal (1/x) of resistance, we can translate each term of the above formula into resistance by substituting the reciprocal of each respective conductance:

$$\frac{1}{R_{total}} = \frac{1}{R_1} + \frac{1}{R_2} + \frac{1}{R_3} + \frac{1}{R_4}$$

Solving the above equation for total resistance (instead of the reciprocal of total resistance), we can invert (reciprocate) both sides of the equation:

$$R_{total} = \frac{1}{\frac{1}{R_1} + \frac{1}{R_2} + \frac{1}{R_3} + \frac{1}{R_4}}$$

So, we arrive at our cryptic resistance formula at last! Conductance (G) is seldom used as a practical measurement, and so the above formula is a common one to see in the analysis of parallel circuits.

Review

- Conductance is the opposite of resistance: the measure of how *easy* it is for electrons to flow through something.
- Conductance is symbolized with the letter “G” and is measured in units of *mhos* or *Siemens*.
- Mathematically, conductance equals the reciprocal of resistance: G = 1/R

This page titled 5.4: Conductance is shared under a GNU Free Documentation License 1.3 license and was authored, remixed, and/or curated by Tony R. Kuphaldt (All About Circuits) via source content that was edited to the style and standards of the LibreTexts platform.

5.5: Power Calculations

When calculating the power dissipation of resistive components, use any one of the three power equations to derive the answer from values of voltage, current, and/or resistance pertaining to each component:

Power equations

$$P = IE \qquad P = \frac{E^2}{R} \qquad P = I^2R$$

This is easily managed by adding another row to our familiar table of voltages, currents, and resistances:

	R_1	R_2	R_3	Total	
E					Volts
I					Amps
R					Ohms
P					Watts

Power for any particular table column can be found by the appropriate Ohm's Law equation (*appropriate* based on what figures are present for E, I, and R in that column).

An interesting rule for total power versus individual power is that it is additive for *any* configuration of circuit: series, parallel, series/parallel, or otherwise. Power is a measure of rate of work, and since power dissipated *must* equal the total power applied by the source(s) (as per the Law of Conservation of Energy in physics), circuit configuration has no effect on the mathematics.

Review

- Power is additive in *any* configuration of resistive circuit: $P_{Total} = P_1 + P_2 + \ldots P_n$

This page titled 5.5: Power Calculations is shared under a GNU Free Documentation License 1.3 license and was authored, remixed, and/or curated by Tony R. Kuphaldt (All About Circuits) via source content that was edited to the style and standards of the LibreTexts platform.

5.6: Correct use of Ohm's Law

One of the most common mistakes made by beginning electronics students in their application of Ohm's Laws is mixing the contexts of voltage, current, and resistance. In other words, a student might mistakenly use a value for I through one resistor and the value for E across a set of interconnected resistors, thinking that they'll arrive at the resistance of that one resistor. Not so! Remember this important rule: The variables used in Ohm's Law equations must be *common* to the same two points in the circuit under consideration. I cannot overemphasize this rule. This is especially important in series-parallel combination circuits where nearby components may have different values for both voltage drop *and* current.

When using Ohm's Law to calculate a variable pertaining to a single component, be sure the voltage you're referencing is solely across that single component and the current you're referencing is solely through that single component and the resistance you're referencing is solely for that single component. Likewise, when calculating a variable pertaining to a set of components in a circuit, be sure that the voltage, current, and resistance values are specific to that complete set of components only! A good way to remember this is to pay close attention to the *two points* terminating the component or set of components being analyzed, making sure that the voltage in question is across those two points, that the current in question is the electron flow from one of those points all the way to the other point, that the resistance in question is the equivalent of a single resistor between those two points, and that the power in question is the total power dissipated by all components between those two points.

The "table" method presented for both series and parallel circuits in this chapter is a good way to keep the context of Ohm's Law correct for any kind of circuit configuration. In a table like the one shown below, you are only allowed to apply an Ohm's Law equation for the values of a single *vertical* column at a time:

	R_1	R_2	R_3	Total	
E					Volts
I					Amps
R					Ohms
P					Watts
	Ohm's Law	*Ohm's Law*	*Ohm's Law*	*Ohm's Law*	

Deriving values *horizontally* across columns is allowable as per the principles of series and parallel circuits:

For series circuits:

	R_1	R_2	R_3	Total	
E	→	→	→	Add	Volts
I	→	→	→	Equal	Amps
R	→	→	→	Add	Ohms
P	→	→	→	Add	Watts

$$E_{total} = E_1 + E_2 + E_3$$

$$I_{total} = I_1 = I_2 = I_3$$

$$R_{total} = R_1 + R_2 + R_3$$

$$P_{total} = P_1 + P_2 + P_3$$

For parallel circuits:

	R_1	R_2	R_3	Total	
E	→	→	→	Equal	Volts
I	→	→	→	Add	Amps
R	→	→	→	Diminish	Ohms
P	→	→	→	Add	Watts

$$E_{total} = E_1 = E_2 = E_3$$

$$I_{total} = I_1 + I_2 + I_3$$

$$R_{total} = \frac{1}{\frac{1}{R_1} + \frac{1}{R_2} + \frac{1}{R_3}}$$

$$P_{total} = P_1 + P_2 + P_3$$

Not only does the “table” method simplify the management of all relevant quantities, it also facilitates cross-checking of answers by making it easy to solve for the original unknown variables through other methods, or by working backwards to solve for the initially given values from your solutions. For example, if you have just solved for all unknown voltages, currents, and resistances in a circuit, you can check your work by adding a row at the bottom for power calculations on each resistor, seeing whether or not all the individual power values add up to the total power. If not, then you must have made a mistake somewhere! While this technique of “cross-checking” your work is nothing new, using the table to arrange all the data for the cross-check(s) results in a minimum of confusion.

Review

- Apply Ohm’s Law to vertical columns in the table.
- Apply rules of series/parallel to horizontal rows in the table.
- Check your calculations by working “backwards” to try to arrive at originally given values (from your first calculated answers), or by solving for a quantity using more than one method (from different given values).

This page titled 5.6: Correct use of Ohm’s Law is shared under a GNU Free Documentation License 1.3 license and was authored, remixed, and/or curated by Tony R. Kuphaldt (All About Circuits) via source content that was edited to the style and standards of the LibreTexts platform.

5.7: Component Failure Analysis

The job of a technician frequently entails “troubleshooting” (locating and correcting a problem) in malfunctioning circuits. Good troubleshooting is a demanding and rewarding effort, requiring a thorough understanding of the basic concepts, the ability to formulate hypotheses (proposed explanations of an effect), the ability to judge the value of different hypotheses based on their probability (how likely one particular cause may be over another), and a sense of creativity in applying a solution to rectify the problem. While it is possible to distill these skills into a scientific methodology, most practiced troubleshooters would agree that troubleshooting involves a touch of art, and that it can take years of experience to fully develop this art.

An essential skill to have is a ready and intuitive understanding of how component faults affect circuits in different configurations. We will explore some of the effects of component faults in both series and parallel circuits here, then to a greater degree at the end of the “Series-Parallel Combination Circuits” chapter.

Let’s start with a simple series circuit:

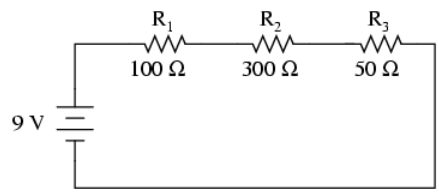

With all components in this circuit functioning at their proper values, we can mathematically determine all currents and voltage drops:

	R_1	R_2	R_3	Total	
E	2	6	1	9	Volts
I	20m	20m	20m	20m	Amps
R	100	300	50	450	Ohms

Now let us suppose that R_2 fails shorted. *Shorted* means that the resistor now acts like a straight piece of wire, with little or no resistance. The circuit will behave as though a “jumper” wire were connected across R_2(in case you were wondering, “jumper wire” is a common term for a temporary wire connection in a circuit). What causes the shorted condition of R_2 is no matter to us in this example; we only care about its effect upon the circuit:

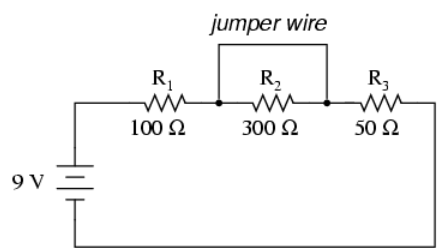

With R_2 shorted, either by a jumper wire or by an internal resistor failure, the total circuit resistance will *decrease*. Since the voltage output by the battery is a constant (at least in our ideal simulation here), a decrease in total circuit resistance means that total circuit current *must increase*:

	R_1	R_2	R_3	Total	
E	6	0	3	9	Volts
I	60m	60m	60m	60m	Amps
R	100	0	50	150	Ohms

Shorted resistor

As the circuit current increases from 20 milliamps to 60 milliamps, the voltage drops across R_1 and R_3(which haven't changed resistances) increase as well, so that the two resistors are dropping the whole 9 volts. R_2, being bypassed by the very low resistance of the jumper wire, is effectively eliminated from the circuit, the resistance from one lead to the other having been reduced to zero. Thus, the voltage drop across R_2, even with the increased total current, is zero volts.

On the other hand, if R_2 were to fail "open"—resistance increasing to nearly infinite levels—it would also create wide-reaching effects in the rest of the circuit:

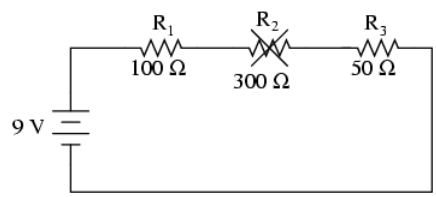

	R_1	R_2	R_3	Total	
E	0	9	0	9	Volts
I	0	0	0	0	Amps
R	100	∞	50	∞	Ohms

Open resistor

With R_2 at infinite resistance and total resistance being the sum of all individual resistances in a series circuit, the total current decreases to zero. With zero circuit current, there is no electron flow to produce voltage drops across R_1 or R_3. R_2, on the other hand, will manifest the full supply voltage across its terminals.

We can apply the same before/after analysis technique to parallel circuits as well. First, we determine what a "healthy" parallel circuit should behave like.

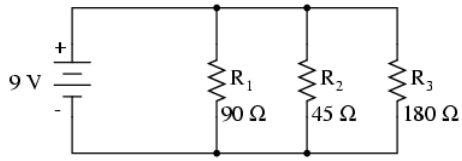

	R_1	R_2	R_3	Total	
E	9	9	9	9	Volts
I	100m	200m	50m	350m	Amps
R	90	45	180	25.714	Ohms

Supposing that R_2 opens in this parallel circuit, here's what the effects will be:

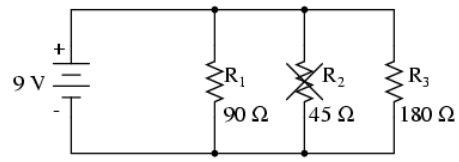

	R_1	R_2	R_3	Total	
E	9	9	9	9	Volts
I	100m	0	50m	150m	Amps
R	90	∞	180	60	Ohms

Open resistor

Notice that in this parallel circuit, an open branch only affects the current through that branch and the circuit's total current. Total voltage—being shared equally across all components in a parallel circuit, will be the same for all resistors. Due to the fact that the voltage source's tendency is to hold voltage *constant*, its voltage will not change, and being in parallel with all the resistors, it will hold all the resistors' voltages the same as they were before: 9 volts. Being that voltage is the only common parameter in a parallel circuit, and the other resistors haven't changed resistance value, their respective branch currents remain unchanged.

This is what happens in a household lamp circuit: all lamps get their operating voltage from power wiring arranged in a parallel fashion. Turning one lamp on and off (one branch in that parallel circuit closing and opening) doesn't affect the operation of other lamps in the room, only the current in that one lamp (branch circuit) and the total current powering all the lamps in the room:

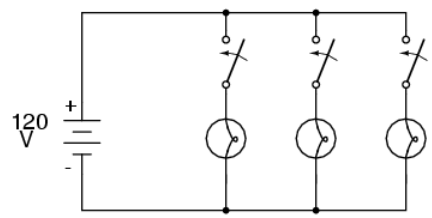

In an ideal case (with perfect voltage sources and zero-resistance connecting wire), shorted resistors in a simple parallel circuit will also have no effect on what's happening in other branches of the circuit. In real life, the effect is not quite the same, and we'll see why in the following example:

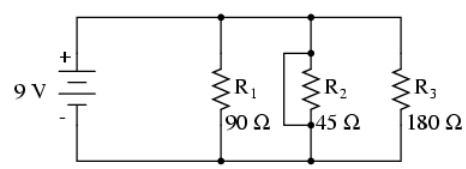

R_2 "shorted" with a jumper wire

	R_1	R_2	R_3	Total	
E	9	9	9	9	Volts
I	100m	∞	50m	∞	Amps
R	90	0	180	0	Ohms

Shorted resistor

A shorted resistor (resistance of 0 Ω) would theoretically draw infinite current from any finite source of voltage (I=E/0). In this case, the zero resistance of R_2 decreases the circuit total resistance to zero Ω as well, increasing total current to a value of infinity. As long as the voltage source holds steady at 9 volts, however, the other branch currents (I_{R1} and I_{R3}) will remain unchanged.

The critical assumption in this "perfect" scheme, however, is that the voltage supply will hold steady at its rated voltage while supplying an infinite amount of current to a short-circuit load. This is simply not realistic. Even if the short has a small amount of resistance (as opposed to absolutely zero resistance), no *real* voltage source could arbitrarily supply a huge overload current and maintain steady voltage at the same time. This is primarily due to the internal resistance intrinsic to all electrical power sources, stemming from the inescapable physical properties of the materials they're constructed of:

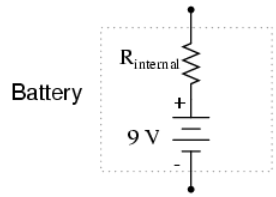

These internal resistances, small as they may be, turn our simple parallel circuit into a series-parallel combination circuit. Usually, the internal resistances of voltage sources are low enough that they can be safely ignored, but when high currents resulting from shorted components are encountered, their effects become very noticeable. In this case, a shorted R_2 would result in almost all the voltage being dropped across the internal resistance of the battery, with almost no voltage left over for resistors R_1, R_2, and R_3:

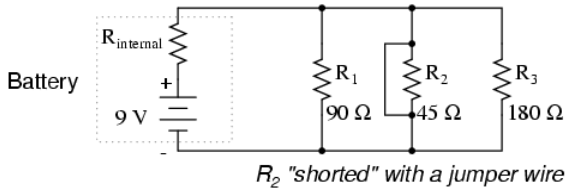

	R_1	R_2	R_3	Total	
E	low	low	low	low	Volts
I	low	high	low	high	Amps
R	90	0	180	0	Ohms

Shorted resistor

Supply voltage decrease due to voltage drop across internal resistance

Suffice it to say, intentional direct short-circuits across the terminals of any voltage source is a bad idea. Even if the resulting high current (heat, flashes, sparks) causes no harm to people nearby, the voltage source will likely sustain damage, unless it has been specifically designed to handle short-circuits, which most voltage sources are not.

Eventually in this book I will lead you through the analysis of circuits *without the use of any numbers*, that is, analyzing the effects of component failure in a circuit without knowing exactly how many volts the battery produces, how many ohms of resistance is in each resistor, etc. This section serves as an introductory step to that kind of analysis.

Whereas the normal application of Ohm's Law and the rules of series and parallel circuits is performed with numerical quantities (*"quantitative"*), this new kind of analysis without precise numerical figures is something I like to call *qualitative* analysis. In other words, we will be analyzing the *qualities* of the effects in a circuit rather than the precise *quantities*. The result, for you, will be a much deeper intuitive understanding of electric circuit operation.

Review

- To determine what would happen in a circuit if a component fails, re-draw that circuit with the equivalent resistance of the failed component in place and re-calculate all values.
- The ability to intuitively determine what will happen to a circuit with any given component fault is a *crucial* skill for any electronics troubleshooter to develop. The best way to learn is to experiment with circuit calculations and real-life circuits, paying close attention to what changes with a fault, what remains the same, and *why*!
- A *shorted* component is one whose resistance has dramatically decreased.
- An *open* component is one whose resistance has dramatically increased. For the record, resistors tend to fail open more often than fail shorted, and they almost never fail unless physically or electrically overstressed (physically abused or overheated).

This page titled 5.7: Component Failure Analysis is shared under a GNU Free Documentation License 1.3 license and was authored, remixed, and/or curated by Tony R. Kuphaldt (All About Circuits) via source content that was edited to the style and standards of the LibreTexts platform.

5.8: Building Simple Resistor Circuits

How to Build a Simple Series Circuit

If all we wish to construct is a simple single-battery, single-resistor circuit, we may easily use *alligator clip* jumper wires like this:

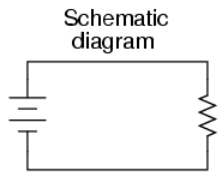

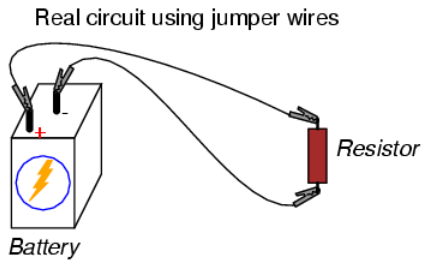

Jumper wires with "alligator" style spring clips at each end provide a safe and convenient method of electrically joining components together.

If we wanted to build a simple series circuit with one battery and three resistors, the same "point-to-point" construction technique using jumper wires could be applied:

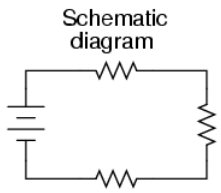

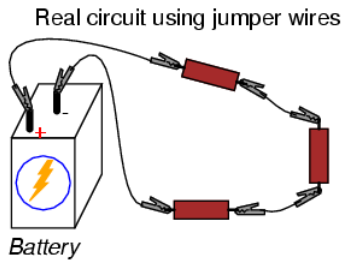

Using a Solderless Breadboard for More Complex Circuits

This technique, however, proves impractical for circuits much more complex than this, due to the awkwardness of the jumper wires and the physical fragility of their connections. A more common method of temporary construction for the hobbyist is the *solderless breadboard*, a device made of plastic with hundreds of spring-loaded connection sockets joining the inserted ends of components and/or 22-gauge solid wire pieces. A photograph of a real breadboard is shown here, followed by an illustration showing a simple series circuit constructed on one:

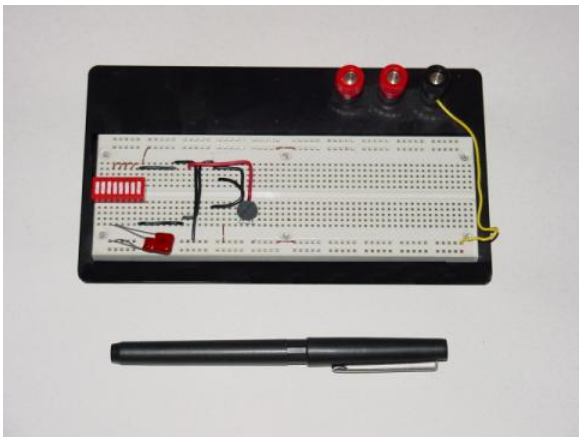

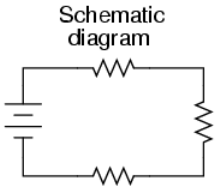

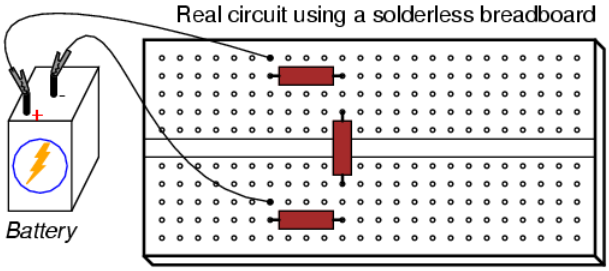

Underneath each hole in the breadboard face is a metal spring clip, designed to grasp any inserted wire or component lead. These metal spring clips are joined underneath the breadboard face, making connections between inserted leads. The connection pattern joins every five holes along a vertical column (as shown with the long axis of the breadboard situated horizontally):

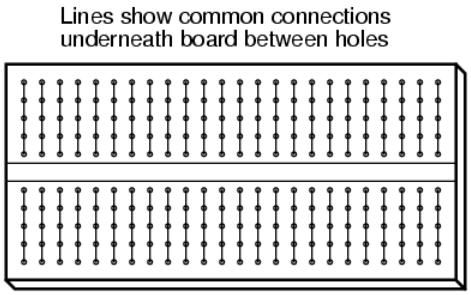

Thus, when a wire or component lead is inserted into a hole on the breadboard, there are four more holes in that column providing potential connection points to other wires and/or component leads. The result is an extremely flexible platform for constructing temporary circuits. For example, the three-resistor circuit just shown could also be built on a breadboard like this:

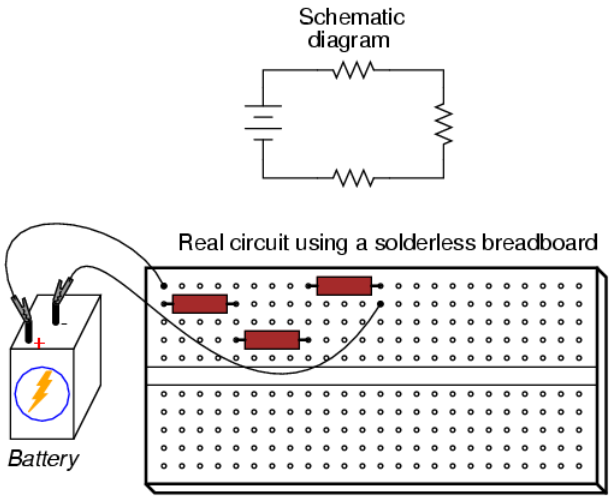

A parallel circuit is also easy to construct on a solderless breadboard:

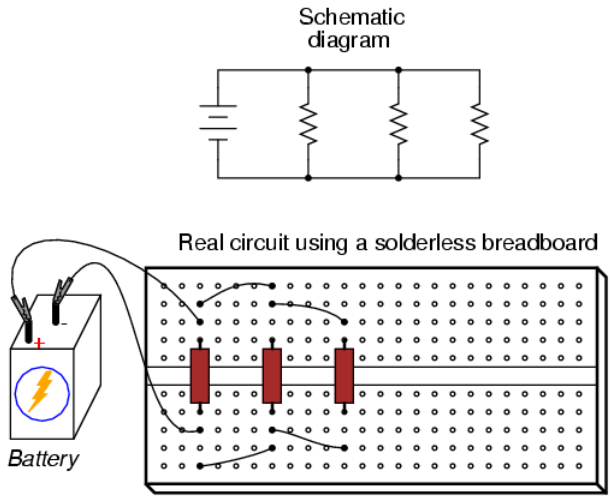

Breadboards have their limitations, though. First and foremost, they are intended for *temporary* construction only. If you pick up a breadboard, turn it upside-down, and shake it, any components plugged into it are sure to loosen, and may fall out of their respective holes. Also, breadboards are limited to fairly low-current (less than 1 amp) circuits. Those spring clips have a small contact area, and thus cannot support high currents without excessive heating.

Soldering or Wire-Wrapping

For greater permanence, one might wish to choose soldering or wire-wrapping. These techniques involve fastening the components and wires to some structure providing a secure mechanical location (such as a phenolic or fiberglass board with holes drilled in it, much like a breadboard without the intrinsic spring-clip connections), and then attaching wires to the secured component leads. Soldering is a form of low-temperature welding, using a tin/lead or tin/silver alloy that melts to and electrically bonds copper objects. Wire ends soldered to component leads or to small, copper ring “pads” bonded on the surface of the circuit board serve to connect the components together. In wire wrapping, a small-gauge wire is tightly wrapped around component leads rather than soldered to leads or copper pads, the tension of the wrapped wire providing a sound mechanical and electrical junction to connect components together.

An example of a *printed circuit board*, or *PCB*, intended for hobbyist use is shown in this photograph:

This board appears copper-side-up: the side where all the soldering is done. Each hole is ringed with a small layer of copper metal for bonding to the solder. All holes are independent of each other on this particular board, unlike the holes on a solderless breadboard which are connected together in groups of five. Printed circuit boards with the same 5-hole connection pattern as breadboards can be purchased and used for hobby circuit construction, though.

Printed Circuit Boards (PCBs)

Production printed circuit boards have *traces* of copper laid down on the phenolic or fiberglass substrate material to form pre-engineered connection pathways which function as wires in a circuit. An example of such a board is shown here, this unit actually a "power supply" circuit designed to take 120 volt alternating current (AC) power from a household wall socket and transform it into low-voltage direct current (DC). A resistor appears on this board, the fifth component counting up from the bottom, located in the middle-right area of the board.

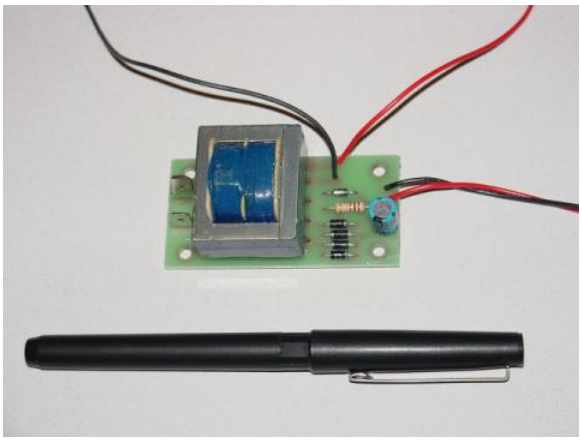

A view of this board's underside reveals the copper "traces" connecting components together, as well as the silver-colored deposits of solder bonding the component leads to those traces:

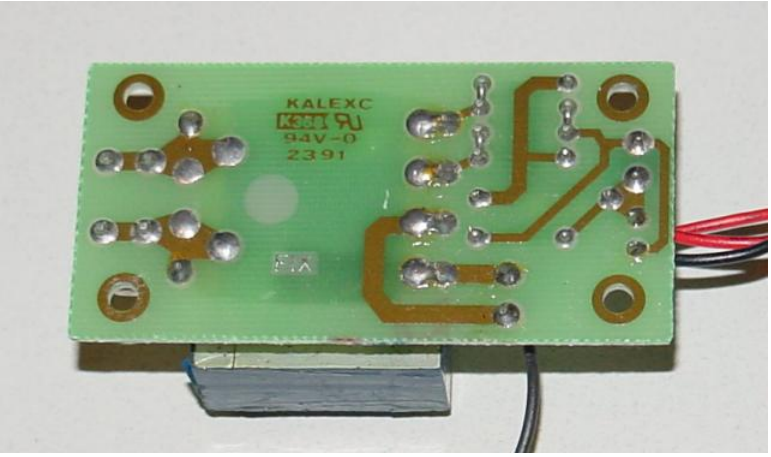

A soldered or wire-wrapped circuit is considered permanent: that is, it is unlikely to fall apart accidently. However, these construction techniques are sometimes considered *too* permanent. If anyone wishes to replace a component or change the circuit in any substantial way, they must invest a fair amount of time undoing the connections. Also, both soldering and wire-wrapping require specialized tools which may not be immediately available.

Terminal Strips

An alternative construction technique used throughout the industrial world is that of the *terminal strip*. Terminal strips, alternatively called *barrier strips* or *terminal blocks*, are comprised of a length of nonconducting material with several small bars of metal embedded within. Each metal bar has at least one machine screw or other fastener under which a wire or component lead may be secured. Multiple wires fastened by one screw are made electrically common to each other, as are wires fastened to multiple screws on the same bar. The following photograph shows one style of terminal strip, with a few wires attached.

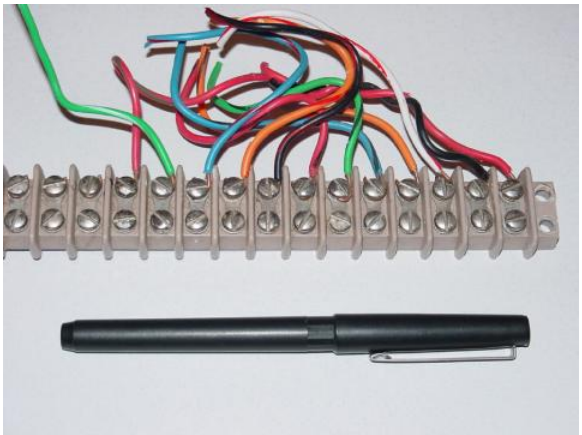

Another, smaller terminal strip is shown in this next photograph. This type, sometimes referred to as a “European” style, has recessed screws to help prevent accidental shorting between terminals by a screwdriver or other metal object:

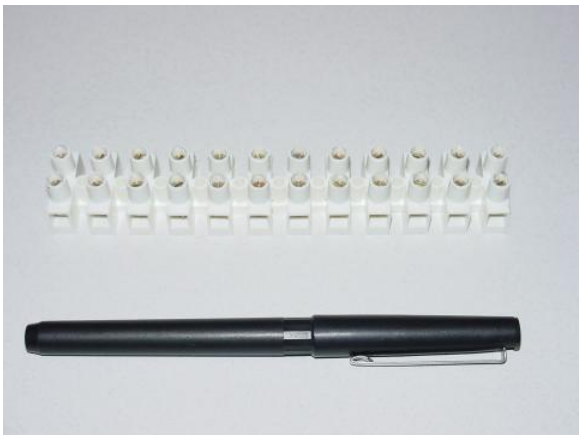

In the following illustration, a single-battery, three-resistor circuit is shown constructed on a terminal strip:

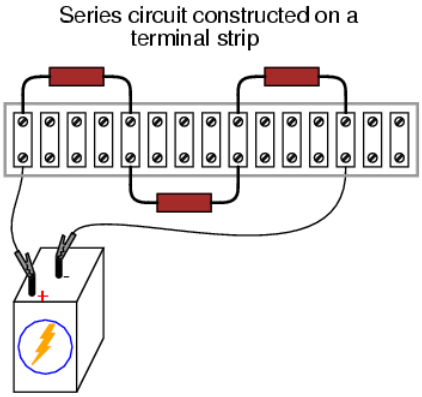

If the terminal strip uses machine screws to hold the component and wire ends, nothing but a screwdriver is needed to secure new connections or break old connections. Some terminal strips use spring-loaded clips—similar to a breadboard's except for increased ruggedness—engaged and disengaged using a screwdriver as a push tool (no twisting involved). The electrical connections established by a terminal strip are quite robust and are considered suitable for both permanent and temporary construction.

Translating a Schematic Diagram to a Circuit Layout

One of the essential skills for anyone interested in electricity and electronics is to be able to "translate" a schematic diagram to a real circuit layout where the components may not be oriented the same way. Schematic diagrams are usually drawn for maximum readability (excepting those few noteworthy examples sketched to create maximum confusion!), but practical circuit construction often demands a different component orientation. Building simple circuits on terminal strips is one way to develop the spatial-reasoning skill of "stretching" wires to make the same connection paths. Consider the case of a single-battery, three-resistor parallel circuit constructed on a terminal strip:

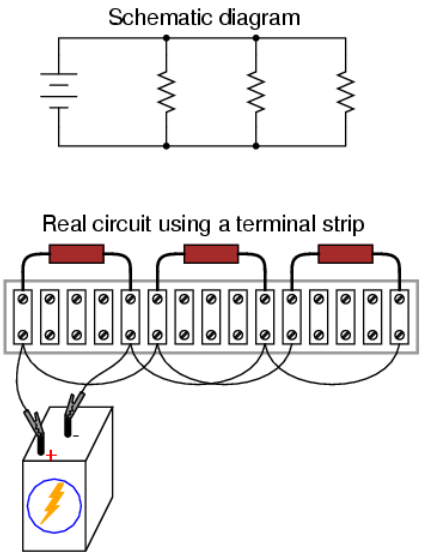

Progressing from a nice, neat, schematic diagram to the real circuit—especially when the resistors to be connected are physically arranged in a *linear* fashion on the terminal strip—is not obvious to many, so I'll outline the process step-by-step. First, start with the clean schematic diagram and all components secured to the terminal strip, with no connecting wires:

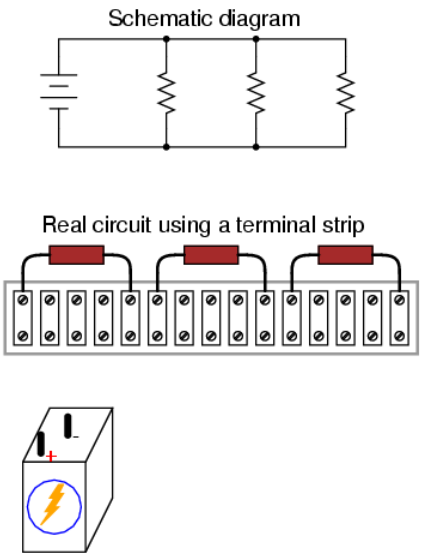

Next, trace the wire connection from one side of the battery to the first component in the schematic, securing a connecting wire between the same two points on the real circuit. I find it helpful to over-draw the schematic's wire with another line to indicate what connections I've made in real life:

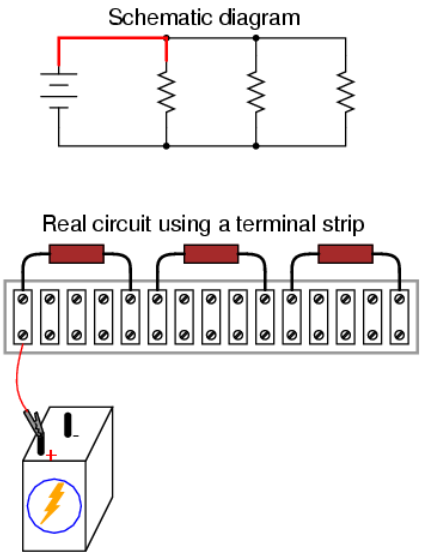

Continue this process, wire by wire, until all connections in the schematic diagram have been accounted for. It might be helpful to regard common wires in a SPICE-like fashion: make all connections to a common wire in the circuit as one step, making sure each and every component with a connection to that wire actually has a connection to that wire before proceeding to the next. For the next step, I'll show how the top sides of the remaining two resistors are connected together, being common with the wire secured in the previous step:

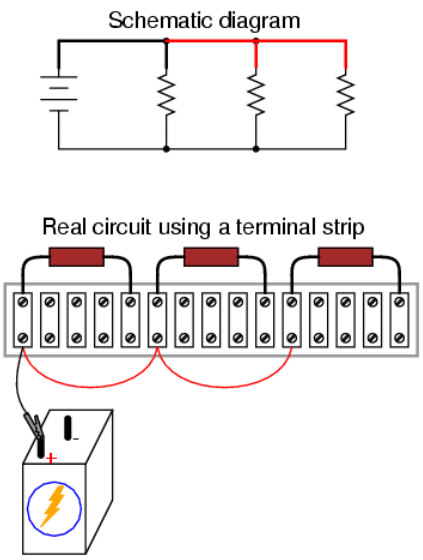

With the top sides of all resistors (as shown in the schematic) connected together, and to the battery's positive (+) terminal, all we have to do now is connect the bottom sides together and to the other side of the battery:

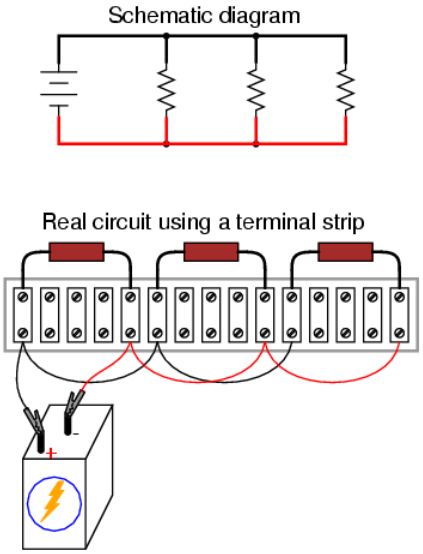

Typically in industry, all wires are labeled with number tags, and electrically common wires bear the same tag number, just as they do in a SPICE simulation. In this case, we could label the wires 1 and 2:

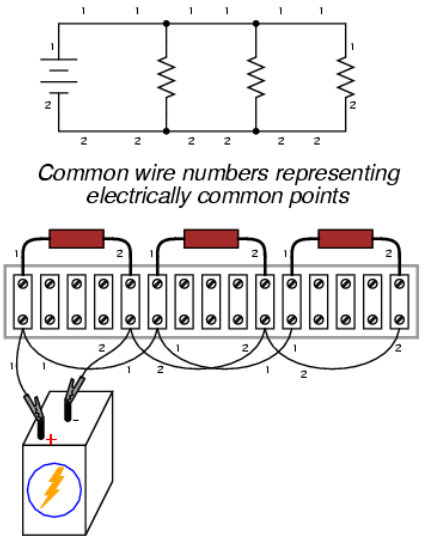

Another industrial convention is to modify the schematic diagram slightly so as to indicate actual wire connection points on the terminal strip. This demands a labeling system for the strip itself: a “TB” number (terminal block number) for the strip, followed by another number representing each metal bar on the strip.

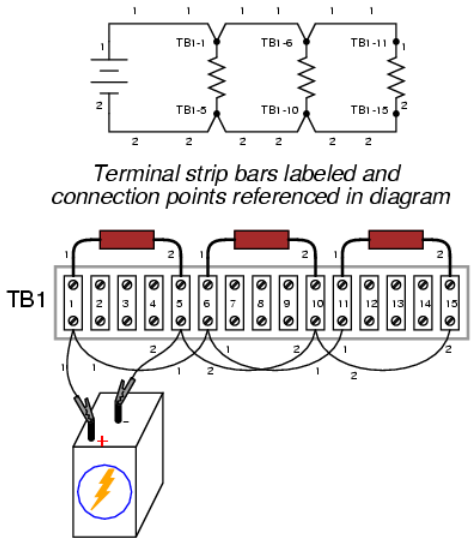

This way, the schematic may be used as a “map” to locate points in a real circuit, regardless of how tangled and complex the connecting wiring may appear to the eyes. This may seem excessive for the simple, three-resistor circuit shown here, but such detail is absolutely necessary for construction and maintenance of large circuits, especially when those circuits may span a great physical distance, using more than one terminal strip located in more than one panel or box.

Review

- A *solderless breadboard* is a device used to quickly assemble temporary circuits by plugging wires and components into electrically common spring-clips arranged underneath rows of holes in a plastic board.
- *Soldering* is a low-temperature welding process utilizing a lead/tin or tin/silver alloy to bond wires and component leads together, usually with the components secured to a fiberglass board.
- *Wire-wrapping* is an alternative to soldering, involving small-gauge wire tightly wrapped around component leads rather than a welded joint to connect components together.
- A *terminal strip*, also known as a *barrier strip* or *terminal block* is another device used to mount components and wires to build circuits. Screw terminals or heavy spring clips attached to metal bars provide connection points for the wire ends and component leads, these metal bars mounted separately to a piece of nonconducting material such as plastic, bakelite, or ceramic.

This page titled 5.8: Building Simple Resistor Circuits is shared under a GNU Free Documentation License 1.3 license and was authored, remixed, and/or curated by Tony R. Kuphaldt (All About Circuits) via source content that was edited to the style and standards of the LibreTexts platform.

CHAPTER OVERVIEW

6: Divider Circuits and Kirchhoff's Laws

6.1: Voltage Divider Circuits
6.2: Kirchhoff’s Voltage Law (KVL)
6.3: Current Divider Circuits and the Current Divider Formula
6.4: Kirchhoff’s Current Law (KCL)

This page titled 6: Divider Circuits and Kirchhoff's Laws is shared under a GNU Free Documentation License 1.3 license and was authored, remixed, and/or curated by Tony R. Kuphaldt (All About Circuits) via source content that was edited to the style and standards of the LibreTexts platform.

6.1: Voltage Divider Circuits

Let's analyze a simple series circuit, determining the voltage drops across individual resistors:

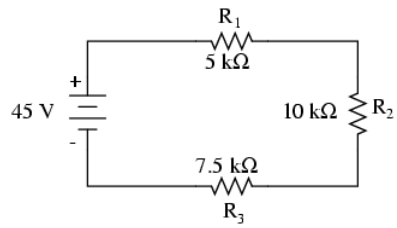

	R_1	R_2	R_3	Total	
E				45	Volts
I					Amps
R	5k	10k	7.5k		Ohms

Determine the Total Circuit Resistance

From the given values of individual resistances, we can determine a total circuit resistance, knowing that resistances add in series:

	R_1	R_2	R_3	Total	
E				45	Volts
I					Amps
R	5k	10k	7.5k	**22.5k**	Ohms

Use Ohm's Law to Calculate Electron Flow

From here, we can use Ohm's Law (I=E/R) to determine the total current, which we know will be the same as each resistor current, currents being equal in all parts of a series circuit:

	R_1	R_2	R_3	Total	
E				45	Volts
I	**2m**	**2m**	**2m**	**2m**	Amps
R	5k	10k	7.5k	22.5k	Ohms

Now, knowing that the circuit current is 2 mA, we can use Ohm's Law (E=IR) to calculate voltage across each resistor:

	R_1	R_2	R_3	Total	
E	**10**	**20**	**15**	45	Volts
I	2m	2m	2m	2m	Amps
R	5k	10k	7.5k	22.5k	Ohms

It should be apparent that the voltage drop across each resistor is proportional to its resistance, given that the current is the same through all resistors. Notice how the voltage across R_2 is double that of the voltage across R_1, just as the resistance of R_2 is double that of R_1.

If we were to change the total voltage, we would find this proportionality of voltage drops remains constant:

	R_1	R_2	R_3	Total	
E	40	80	60	180	Volts
I	8m	8m	8m	8m	Amps
R	5k	10k	7.5k	22.5k	Ohms

The voltage across R_2 is still exactly twice that of R_1's drop, despite the fact that the source voltage has changed. The proportionality of voltage drops (ratio of one to another) is strictly a function of resistance values.

With a little more observation, it becomes apparent that the voltage drop across each resistor is also a fixed proportion of the supply voltage. The voltage across R_1, for example, was 10 volts when the battery supply was 45 volts. When the battery voltage was increased to 180 volts (4 times as much), the voltage drop across R_1 also increased by a factor of 4 (from 10 to 40 volts). The *ratio* between R_1's voltage drop and total voltage, however, did not change:

$$\frac{E_{R1}}{E_{total}} = \frac{10\text{ V}}{45\text{ V}} = \frac{40\text{ V}}{180\text{ V}} = 0.22222$$

Likewise, none of the other voltage drop ratios changed with the increased supply voltage either:

$$\frac{E_{R2}}{E_{total}} = \frac{20\text{ V}}{45\text{ V}} = \frac{80\text{ V}}{180\text{ V}} = 0.44444$$

$$\frac{E_{R3}}{E_{total}} = \frac{15\text{ V}}{45\text{ V}} = \frac{60\text{ V}}{180\text{ V}} = 0.33333$$

Voltage Divider Formula

For this reason a series circuit is often called a *voltage divider* for its ability to proportion—or divide—the total voltage into fractional portions of constant ratio. With a little bit of algebra, we can derive a formula for determining series resistor voltage drop given nothing more than total voltage, individual resistance, and total resistance:

Voltage drop across *any* resistor $\quad E_n = I_n R_n$

Current in a series circuit $\quad I_{total} = \frac{E_{total}}{R_{total}}$

. . . *Substituting* $\frac{E_{total}}{R_{total}}$ *for* I_n *in the first equation* . . .

Voltage drop across any *series* resistor $\quad E_n = \frac{E_{total}}{R_{total}} R_n$

. . . or . . .

$$\boxed{E_n = E_{total} \frac{R_n}{R_{total}}}$$

The ratio of individual resistance to total resistance is the same as the ratio of individual voltage drop to total supply voltage in a voltage divider circuit. This is known as the *voltage divider formula*, and it is a short-cut method for determining voltage drop in a series circuit without going through the current calculation(s) of Ohm's Law.

Using this formula, we can re-analyze the example circuit's voltage drops in fewer steps:

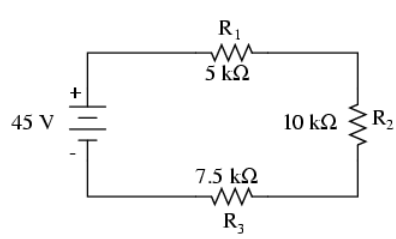

Voltage dividers find wide application in electric meter circuits, where specific combinations of series resistors are used to "divide" a voltage into precise proportions as part of a voltage measurement device.

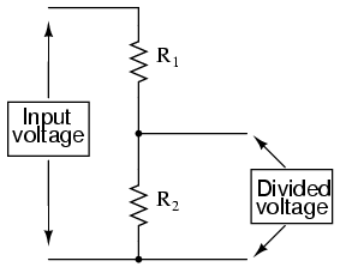

One device frequently used as a voltage-dividing component is the *potentiometer*, which is a resistor with a movable element positioned by a manual knob or lever. The movable element, typically called a *wiper*, makes contact with a resistive strip of material (commonly called the *slidewire* if made of resistive metal wire) at any point selected by the manual control:

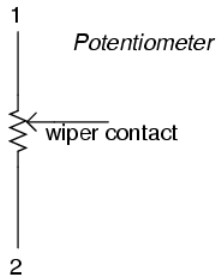

The wiper contact is the left-facing arrow symbol drawn in the middle of the vertical resistor element. As it is moved up, it contacts the resistive strip closer to terminal 1 and further away from terminal 2, lowering resistance to terminal 1 and raising resistance to terminal 2. As it is moved down, the opposite effect results. The resistance as measured between terminals 1 and 2 is constant for any wiper position.

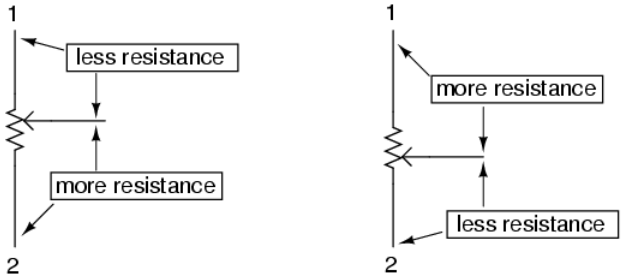

Rotary vs. Linear Potentiometers

Shown here are internal illustrations of two potentiometer types, rotary and linear:

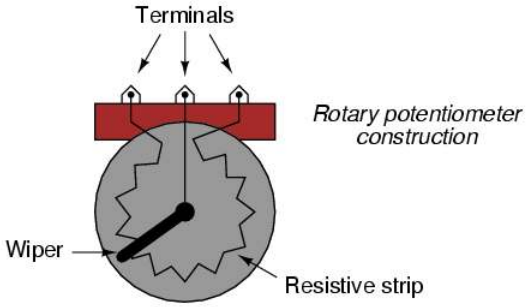

Some linear potentiometers are actuated by straight-line motion of a lever or slide button. Others, like the one depicted in the previous illustration, are actuated by a turn-screw for fine adjustment ability. The latter units are sometimes referred to as *trimpots*, because they work well for applications requiring a variable resistance to be “trimmed” to some precise value. It should be noted

that not all linear potentiometers have the same terminal assignments as shown in this illustration. With some, the wiper terminal is in the middle, between the two end terminals.

The following photograph shows a real, rotary potentiometer with exposed wiper and slidewire for easy viewing. The shaft which moves the wiper has been turned almost fully clockwise so that the wiper is nearly touching the left terminal end of the slidewire:

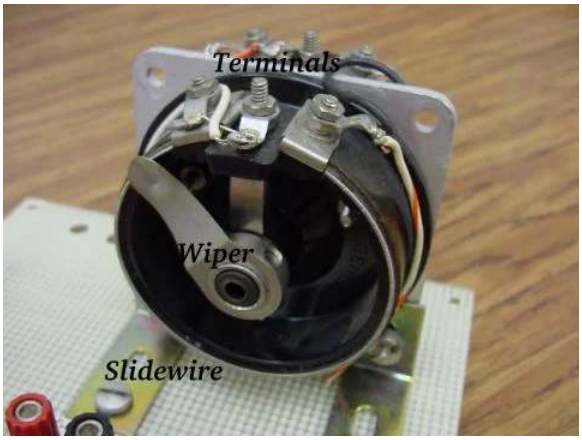

Here is the same potentiometer with the wiper shaft moved almost to the full-counterclockwise position, so that the wiper is near the other extreme end of travel:

If a constant voltage is applied between the outer terminals (across the length of the slidewire), the wiper position will tap off a fraction of the applied voltage, measurable between the wiper contact and either of the other two terminals. The fractional value depends entirely on the physical position of the wiper:

Using a potentiometer as a variable voltage divider

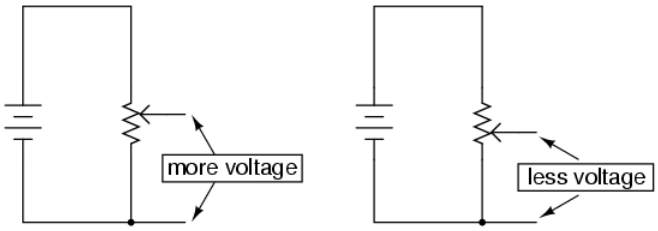

The Importance of Potentiometer Application

Just like the fixed voltage divider, the potentiometer's voltage *division ratio* is strictly a function of resistance and not of the magnitude of applied voltage. In other words, if the potentiometer knob or lever is moved to the 50 percent (exact center) position,

the voltage dropped between wiper and either outside terminal would be exactly 1/2 of the applied voltage, no matter what that voltage happens to be, or what the end-to-end resistance of the potentiometer is. In other words, a potentiometer functions as a variable voltage divider where the voltage division ratio is set by wiper position.

This application of the potentiometer is a very useful means of obtaining a variable voltage from a fixed-voltage source such as a battery. If a circuit you're building requires a certain amount of voltage that is less than the value of an available battery's voltage, you may connect the outer terminals of a potentiometer across that battery and "dial-up" whatever voltage you need between the potentiometer wiper and one of the outer terminals for use in your circuit:

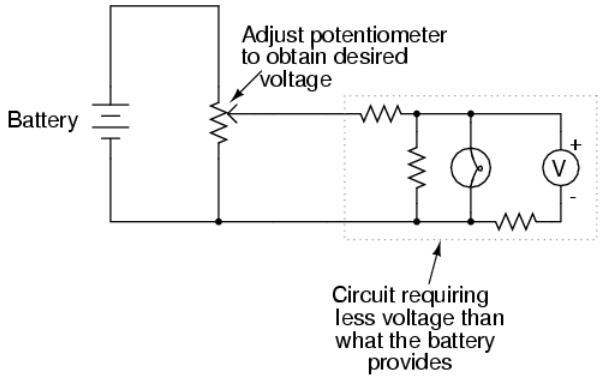

When used in this manner, the name *potentiometer* makes perfect sense: they *meter* (control) the *potential*(voltage) applied across them by creating a variable voltage-divider ratio. This use of the three-terminal potentiometer as a variable voltage divider is very popular in circuit design.

Shown here are several small potentiometers of the kind commonly used in consumer electronic equipment and by hobbyists and students in constructing circuits:

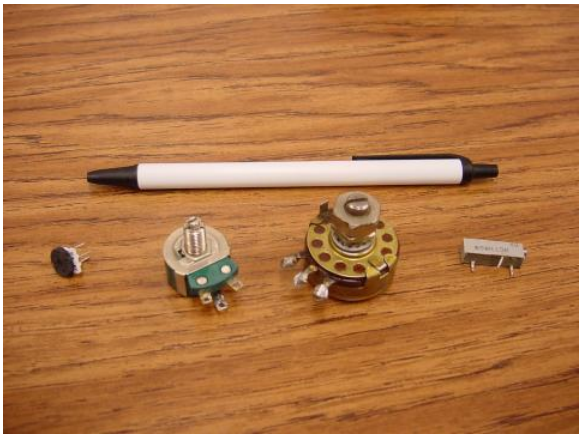

The smaller units on the very left and very right are designed to plug into a solderless breadboard or be soldered into a printed circuit board. The middle units are designed to be mounted on a flat panel with wires soldered to each of the three terminals.

Here are three more potentiometers, more specialized than the set just shown:

The large “Helipot” unit is a laboratory potentiometer designed for quick and easy connection to a circuit. The unit in the lower-left corner of the photograph is the same type of potentiometer, just without a case or 10-turn counting dial. Both of these potentiometers are precision units, using multi-turn helical-track resistance strips and wiper mechanisms for making small adjustments. The unit on the lower-right is a panel-mount potentiometer, designed for rough service in industrial applications.

Review

- Series circuits proportion, or *divide*, the total supply voltage among individual voltage drops, the proportions being strictly dependent upon resistances: $E_{Rn} = E_{Total} (R_n / R_{Total})$
- A potentiometer is a variable-resistance component with three connection points, frequently used as an adjustable voltage divider.

This page titled 6.1: Voltage Divider Circuits is shared under a GNU Free Documentation License 1.3 license and was authored, remixed, and/or curated by Tony R. Kuphaldt (All About Circuits) via source content that was edited to the style and standards of the LibreTexts platform.

6.2: Kirchhoff's Voltage Law (KVL)

What is Kirchhoff's Voltage Law (KVL)?

The principle known as *Kirchhoff's Voltage Law* (discovered in 1847 by Gustav R. Kirchhoff, a German physicist) can be stated as such:

> ***"The algebraic sum of all voltages in a loop must equal zero"***

By *algebraic*, I mean accounting for signs (polarities) as well as magnitudes. By *loop*, I mean any path traced from one point in a circuit around to other points in that circuit, and finally back to the initial point.

Demonstrating Kirchhoff's Voltage Law in a Series Circuit

Let's take another look at our series circuit from the previous page as an example, this time numbering the points in the circuit for voltage reference:

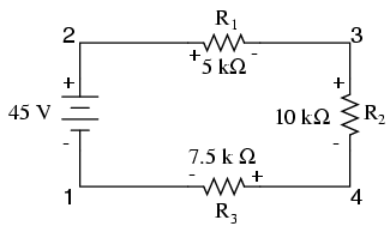

If we were to connect a voltmeter between points 2 and 1, red test lead to point 2 and black test lead to point 1, the meter would register +45 volts. Typically the "+" sign is not shown, but rather implied, for positive readings in digital meter displays. However, for this lesson the polarity of the voltage reading is very important and so I will show positive numbers explicitly:

$$E_{2\text{-}1} = +45 \text{ V}$$

When a voltage is specified with a double subscript (the characters "2-1" in the notation "$E_{2\text{-}1}$"), it means the voltage at the first point (2) as measured in reference to the second point (1). A voltage specified as "E_{cd}" would mean the voltage as indicated by a digital meter with the red test lead on point "c" and the black test lead on point "d": the voltage at "c" in reference to "d".

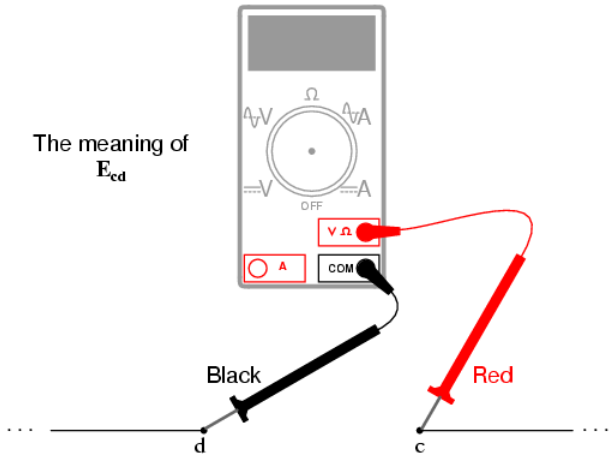

If we were to take that same voltmeter and measure the voltage drop across each resistor, stepping around the circuit in a clockwise direction with the red test lead of our meter on the point ahead and the black test lead on the point behind, we would obtain the following readings:

$E_{3\text{-}2} = -10$ V

$E_{4\text{-}3} = -20$ V

$E_{1\text{-}4} = -15$ V

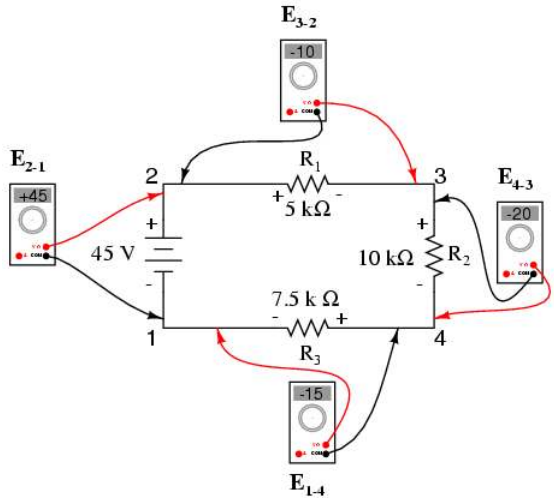

We should already be familiar with the general principle for series circuits stating that individual voltage drops add up to the total applied voltage, but measuring voltage drops in this manner and paying attention to the polarity (mathematical sign) of the readings reveals another facet of this principle: that the voltages measured as such all add up to zero:

$E_{2\text{-}1} =$	+45 V	*voltage from point* **2** *to point* **1**
$E_{3\text{-}2} =$	-10 V	*voltage from point* **3** *to point* **2**
$E_{4\text{-}3} =$	-20 V	*voltage from point* **4** *to point* **3**
+ $E_{1\text{-}4} =$	-15 V	*voltage from point* **1** *to point* **4**
	0 V	

In the above example, the loop was formed by following points in this order: 1-2-3-4-1. It doesn't matter which point we start at or which direction we proceed in tracing the loop; the voltage sum will still equal zero. To demonstrate, we can tally up the voltages in loop 3-2-1-4-3 of the same circuit:

$E_{2\text{-}3} =$	+10 V	*voltage from point* **2** *to point* **3**
$E_{1\text{-}2} =$	-45 V	*voltage from point* **1** *to point* **2**
$E_{4\text{-}1} =$	+15 V	*voltage from point* **4** *to point* **1**
+ $E_{3\text{-}4} =$	+20 V	*voltage from point* **3** *to point* **4**
	0 V	

This may make more sense if we re-draw our example series circuit so that all components are represented in a straight line:

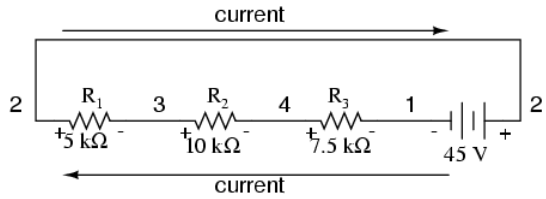

It's still the same series circuit, just with the components arranged in a different form. Notice the polarities of the resistor voltage drops with respect to the battery: the battery's voltage is negative on the left and positive on the right, whereas all the resistor voltage drops are oriented the other way: positive on the left and negative on the right. This is because the resistors are *resisting* the flow of electrons being pushed by the battery. In other words, the "push" exerted by the resistors *against* the flow of electrons *must* be in a direction opposite the source of electromotive force.

Here we see what a digital voltmeter would indicate across each component in this circuit, black lead on the left and red lead on the right, as laid out in horizontal fashion:

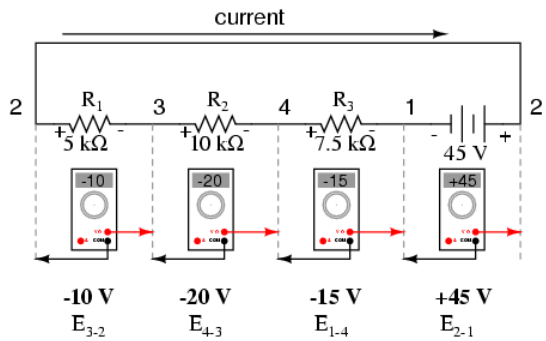

If we were to take that same voltmeter and read voltage across combinations of components, starting with only R_1 on the left and progressing across the whole string of components, we will see how the voltages add algebraically (to zero):

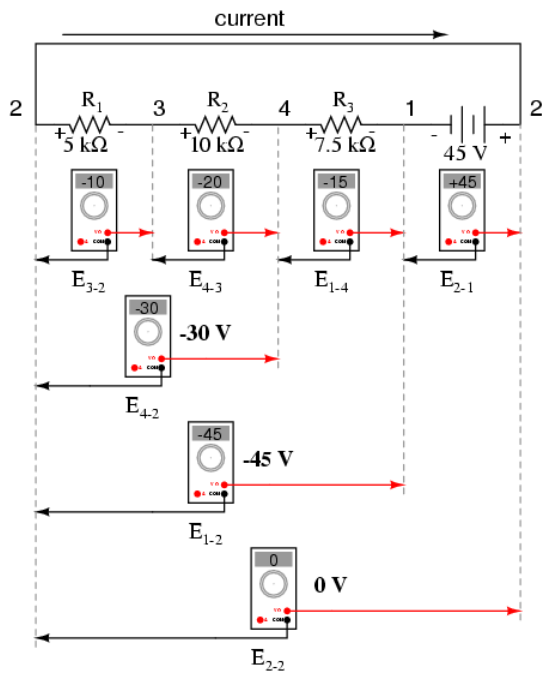

The fact that series voltages add up should be no mystery, but we notice that the *polarity* of these voltages makes a lot of difference in how the figures add. While reading voltage across R_1, R_1—R_2, and R_1—R_2—R_3(I'm using a "double-dash" symbol "—" to represent the *series* connection between resistors R_1, R_2, and R_3), we see how the voltages measure successively larger (albeit negative) magnitudes, because the polarities of the individual voltage drops are in the same orientation (positive left, negative right). The sum of the voltage drops across R_1, R_2, and R_3 equals 45 volts, which is the same as the battery's output, except that the battery's polarity is opposite that of the resistor voltage drops (negative left, positive right), so we end up with 0 volts measured across the whole string of components.

That we should end up with exactly 0 volts across the whole string should be no mystery, either. Looking at the circuit, we can see that the far left of the string (left side of R_1: point number 2) is directly connected to the far right of the string (right side of battery: point number 2), as necessary to complete the circuit. Since these two points are directly connected, they are *electrically common* to each other. And, as such, the voltage between those two electrically common points *must* be zero.

Demonstrating Kirchhoff's Voltage Law in a Parallel Circuit

Kirchhoff's Voltage Law (sometimes denoted as *KVL* for short) will work for *any* circuit configuration at all, not just simple series. Note how it works for this parallel circuit:

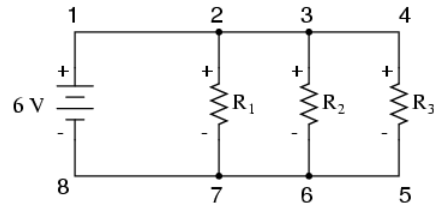

Being a parallel circuit, the voltage across every resistor is the same as the supply voltage: 6 volts. Tallying up voltages around loop 2-3-4-5-6-7-2, we get:

E_{3-2} =	0 V	*voltage from point* **3** *to point* **2**
E_{4-3} =	0 V	*voltage from point* **4** *to point* **3**
E_{5-4} =	-6 V	*voltage from point* **5** *to point* **4**
E_{6-5} =	0 V	*voltage from point* **6** *to point* **5**
E_{7-6} =	0 V	*voltage from point* **7** *to point* **6**
+ E_{2-7} =	+6 V	*voltage from point* **2** *to point* **7**
E_{2-2} =	0 V	

Note how I label the final (sum) voltage as E_{2-2}. Since we began our loop-stepping sequence at point 2 and ended at point 2, the algebraic sum of those voltages will be the same as the voltage measured between the same point (E_{2-2}), which of course must be zero.

The Validity of Kirchhoff's Voltage Law, Regardless of Circuit Topology

The fact that this circuit is parallel instead of series has nothing to do with the validity of Kirchhoff's Voltage Law. For that matter, the circuit could be a "black box"—its component configuration completely hidden from our view, with only a set of exposed terminals for us to measure voltage between—and KVL would still hold true:

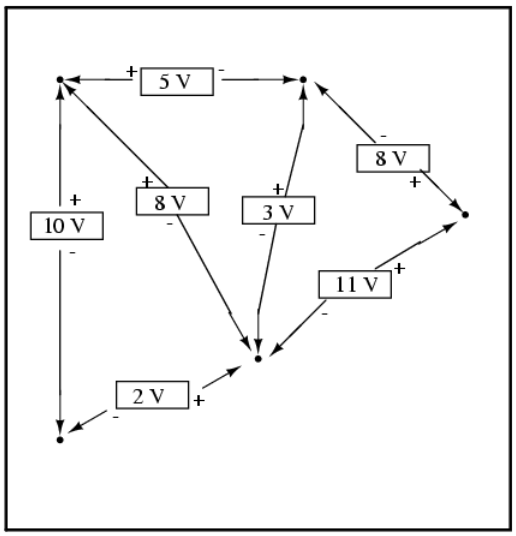

Try any order of steps from any terminal in the above diagram, stepping around back to the original terminal, and you'll find that the algebraic sum of the voltages *always* equals zero.

Furthermore, the "loop" we trace for KVL doesn't even have to be a real current path in the closed-circuit sense of the word. All we have to do to comply with KVL is to begin and end at the same point in the circuit, tallying voltage drops and polarities as we go between the next and the last point. Consider this absurd example, tracing "loop" 2-3-6-3-2 in the same parallel resistor circuit:

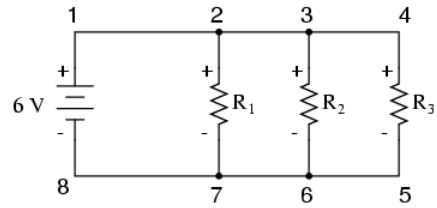

$E_{3\text{-}2} = 0$ V *voltage from point* **3** *to point* **2**
$E_{6\text{-}3} = -6$ V *voltage from point* **6** *to point* **3**
$E_{3\text{-}6} = +6$ V *voltage from point* **3** *to point* **6**
$+\ E_{2\text{-}3} = 0$ V *voltage from point* **2** *to point* **3**
$E_{2\text{-}2} = 0$ V

KVL can be used to determine an unknown voltage in a complex circuit, where all other voltages around a particular "loop" are known. Take the following complex circuit (actually two series circuits joined by a single wire at the bottom) as an example:

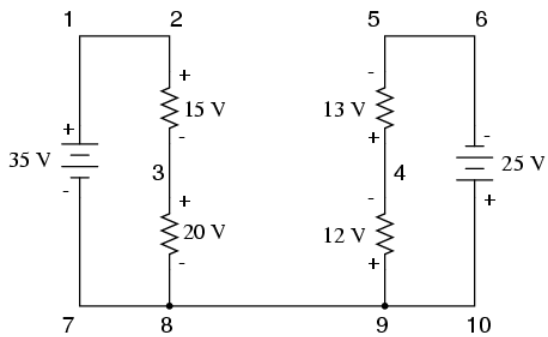

To make the problem simpler, I've omitted resistance values and simply given voltage drops across each resistor. The two series circuits share a common wire between them (wire 7-8-9-10), making voltage measurements *between* the two circuits possible. If we wanted to determine the voltage between points 4 and 3, we could set up a KVL equation with the voltage between those points as the unknown:

$$E_{4\text{-}3} + E_{9\text{-}4} + E_{8\text{-}9} + E_{3\text{-}8} = 0$$

$$E_{4\text{-}3} + 12 + 0 + 20 = 0$$

$$E_{4\text{-}3} + 32 = 0$$

$$E_{4\text{-}3} = -32 \text{ V}$$

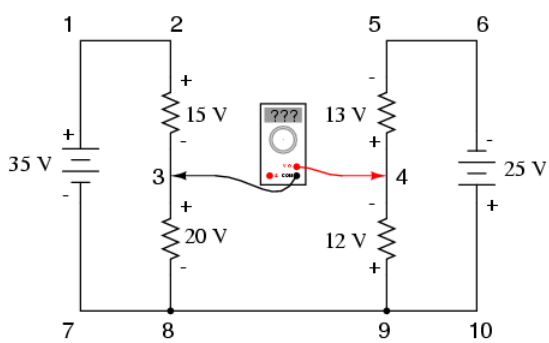

Measuring voltage from point 4 to point 3 (unknown amount)

$E_{4\text{-}3}$

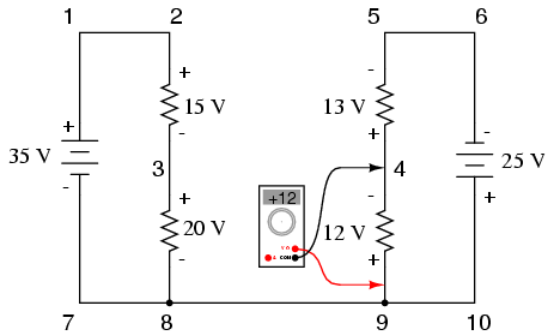

Measuring voltage from point 9 to point 4 (+12 volts)

$$E_{4\text{-}3} + 12$$

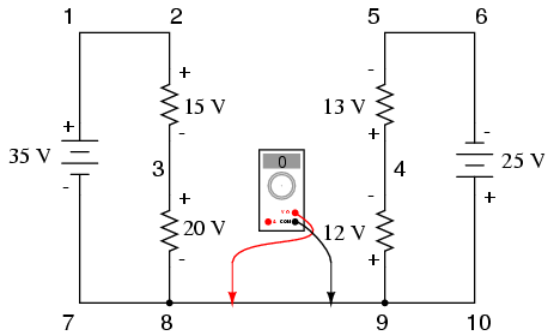

Measuring voltage from point 8 to point 9 (0 volts)

$$E_{4\text{-}3} + 12 + 0$$

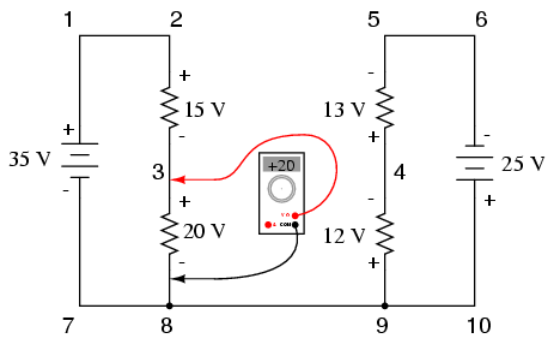

Measuring voltage from point 3 to point 8 (+20 volts)

$$E_{4\text{-}3} + 12 + 0 + 20 = 0$$

Stepping around the loop 3-4-9-8-3, we write the voltage drop figures as a digital voltmeter would register them, measuring with the red test lead on the point ahead and black test lead on the point behind as we progress around the loop. Therefore, the voltage from point 9 to point 4 is a positive (+) 12 volts because the “red lead” is on point 9 and the “black lead” is on point 4. The voltage from point 3 to point 8 is a positive (+) 20 volts because the “red lead” is on point 3 and the “black lead” is on point 8. The voltage from point 8 to point 9 is zero, of course, because those two points are electrically common.

Our final answer for the voltage from point 4 to point 3 is a negative (-) 32 volts, telling us that point 3 is actually positive with respect to point 4, precisely what a digital voltmeter would indicate with the red lead on point 4 and the black lead on point 3:

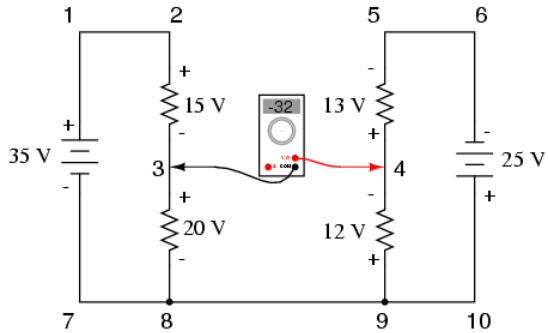

$E_{4\text{-}3} = -32$

In other words, the initial placement of our "meter leads" in this KVL problem was "backwards." Had we generated our KVL equation starting with $E_{3\text{-}4}$ instead of $E_{4\text{-}3}$, stepping around the same loop with the opposite meter lead orientation, the final answer would have been $E_{3\text{-}4} = +32$ volts:

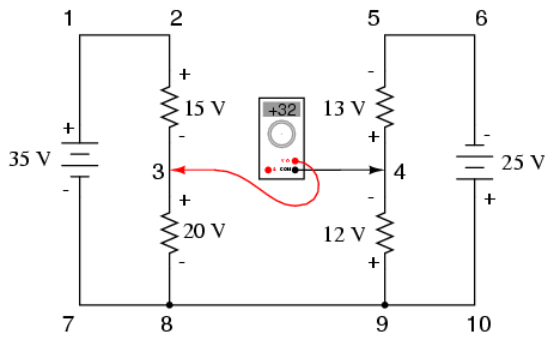

$E_{3\text{-}4} = +32$

It is important to realize that neither approach is "wrong." In both cases, we arrive at the correct assessment of voltage between the two points, 3 and 4: point 3 is positive with respect to point 4, and the voltage between them is 32 volts.

Review

- Kirchhoff's Voltage Law (KVL): *"The algebraic sum of all voltages in a loop must equal zero"*

This page titled 6.2: Kirchhoff's Voltage Law (KVL) is shared under a GNU Free Documentation License 1.3 license and was authored, remixed, and/or curated by Tony R. Kuphaldt (All About Circuits) via source content that was edited to the style and standards of the LibreTexts platform.

6.3: Current Divider Circuits and the Current Divider Formula

A parallel circuit is often called a *current divider* for its ability to proportion—or divide—the total current into fractional parts

To understand what this means, let's first analyze a simple parallel circuit, determining the branch currents through individual resistors:

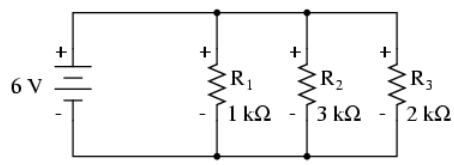

Knowing that voltages across all components in a parallel circuit are the same, we can fill in our voltage/current/resistance table with 6 volts across the top row:

	R_1	R_2	R_3	Total	
E	6	6	6	6	Volts
I					Amps
R	1k	3k	2k		Ohms

Using Ohm's Law (I=E/R) we can calculate each branch current:

	R_1	R_2	R_3	Total	
E	6	6	6	6	Volts
I	**6m**	**2m**	**3m**		Amps
R	1k	3k	2k		Ohms

Knowing that branch currents add up in parallel circuits to equal the total current, we can arrive at total current by summing 6 mA, 2 mA, and 3 mA:

	R_1	R_2	R_3	Total	
E	6	6	6	6	Volts
I	6m	2m	3m	**11m**	Amps
R	1k	3k	2k		Ohms

The final step, of course, is to figure total resistance. This can be done with Ohm's Law (R=E/I) in the "total" column, or with the parallel resistance formula from individual resistances. Either way, we'll get the same answer:

	R_1	R_2	R_3	Total	
E	6	6	6	6	Volts
I	6m	2m	3m	11m	Amps
R	1k	3k	2k	**545.45**	Ohms

Once again, it should be apparent that the current through each resistor is related to its resistance, given that the voltage across all resistors is the same. Rather than being directly proportional, the relationship here is one of inverse proportion. For example, the current through R_1 is twice as much as the current through R_3, which has twice the resistance of R_1.

If we were to change the supply voltage of this circuit, we find that (surprise!) these proportional ratios do not change:

	R_1	R_2	R_3	Total	
E	24	24	24	24	Volts
I	24m	8m	12m	44m	Amps
R	1k	3k	2k	545.45	Ohms

The current through R_1 is still exactly twice that of R_3, despite the fact that the source voltage has changed. The proportionality between different branch currents is strictly a function of resistance.

Also reminiscent of voltage dividers is the fact that branch currents are fixed proportions of the total current. Despite the fourfold increase in supply voltage, the ratio between any branch current and the total current remains unchanged:

$$\frac{I_{R1}}{I_{total}} = \frac{6\text{ mA}}{11\text{ mA}} = \frac{24\text{ mA}}{44\text{ mA}} = 0.54545$$

$$\frac{I_{R2}}{I_{total}} = \frac{2\text{ mA}}{11\text{ mA}} = \frac{8\text{ mA}}{44\text{ mA}} = 0.18182$$

$$\frac{I_{R3}}{I_{total}} = \frac{3\text{ mA}}{11\text{ mA}} = \frac{12\text{ mA}}{44\text{ mA}} = 0.27273$$

Now we can see for ourselves the point we made at the beginning of this page: A parallel circuit is often called a *current divider* for its ability to proportion—or divide—the total current into fractional parts.

The Current Divider Formula

With a little bit of algebra, we can derive a formula for determining parallel resistor current given nothing more than total current, individual resistance, and total resistance:

Current through *any* resistor $\quad I_n = \frac{E_n}{R_n}$

Voltage in a parallel circuit $\quad E_{total} = E_n = I_{total} R_{total}$

. . . Substituting $I_{total} R_{total}$ *for* E_n *in the first equation . . .*

Current through any *parallel* resistor $\quad I_n = \frac{I_{total} R_{total}}{R_n}$

. . . or . . .

$$\boxed{I_n = I_{total} \frac{R_{total}}{R_n}}$$

The ratio of total resistance to individual resistance is the same ratio as individual (branch) current to total current. This is known as the *current divider formula* and it is a short-cut method for determining branch currents in a parallel circuit when the total current is known.

Current Divider Formula Example

Using the original parallel circuit as an example, we can re-calculate the branch currents using this formula, if we start by knowing the total current and total resistance:

$$I_{R1} = 11\text{ mA} \frac{545.45\ \Omega}{1\text{ k}\Omega} = 6\text{ mA}$$

$$I_{R2} = 11\text{ mA} \frac{545.45\ \Omega}{3\text{ k}\Omega} = 2\text{ mA}$$

$$I_{R3} = 11\text{ mA} \frac{545.45\ \Omega}{2\text{ k}\Omega} = 3\text{ mA}$$

If you take the time to compare the two divider formulae, you'll see that they are remarkably similar. Notice, however, that the ratio in the voltage divider formula is R_n (individual resistance) divided by R_{Total}, and how the ratio in the current divider formula is R_{Total} divided by R_n:

Voltage divider formula

$$E_n = E_{total} \frac{R_n}{R_{total}}$$

Current divider formula

$$I_n = I_{total} \frac{R_{total}}{R_n}$$

Current Divider Formula vs. Voltage Divider Formula

It is quite easy to confuse these two equations, getting the resistance ratios backwards. One way to help remember the proper form is to keep in mind that both ratios in the voltage and current divider equations must equal less than one. After all these are *divider* equations, not *multiplier* equations! If the fraction is upside-down, it will provide a ratio greater than one, which is incorrect.

Knowing that total resistance in a series (voltage divider) circuit is always greater than any of the individual resistances, we know that the fraction for that formula must be R_n over R_{Total}. Conversely, knowing that total resistance in a parallel (current divider) circuit is always less then any of the individual resistances, we know that the fraction for that formula must be R_{Total} over R_n.

Current Divider Circuit Example Application: Electric Meter Circuit

Current divider circuits find application in electric meter circuits, where a fraction of a measured current is desired to be routed through a sensitive detection device. Using the current divider formula, the proper shunt resistor can be sized to proportion just the right amount of current for the device in any given instance:

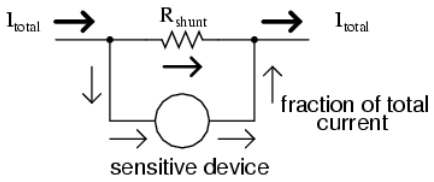

Current Divider Circuit Review:

- Parallel circuits proportion, or "divide," the total circuit current among individual branch currents, the proportions being strictly dependent upon resistances: $I_n = I_{Total} (R_{Total} / R_n)$

This page titled 6.3: Current Divider Circuits and the Current Divider Formula is shared under a GNU Free Documentation License 1.3 license and was authored, remixed, and/or curated by Tony R. Kuphaldt (All About Circuits) via source content that was edited to the style and standards of the LibreTexts platform.

6.4: Kirchhoff's Current Law (KCL)

What Is Kirchhoff's Current Law?

Kirchhoff's Current Law, often shortened to KCL, states that "The algebraic sum of all currents entering and exiting a node must equal zero."

This law is used to describe how a charge enters and leaves a wire junction point or node on a wire.

Armed with this information, let's now take a look at an example of the law in practice, why it's important, and how it was derived.

Parallel Circuit Review

Let's take a closer look at that last parallel example circuit:

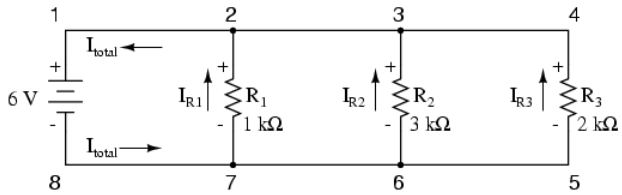

Solving for all values of voltage and current in this circuit:

	R_1	R_2	R_3	Total	
E	6	6	6	6	Volts
I	6m	2m	3m	11m	Amps
R	1k	3k	2k	**545.45**	Ohms

At this point, we know the value of each branch current and of the total current in the circuit. We know that the total current in a parallel circuit must equal the sum of the branch currents, but there's more going on in this circuit than just that. Taking a look at the currents at each wire junction point (node) in the circuit, we should be able to see something else:

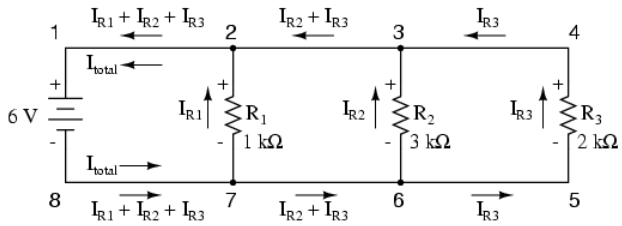

Currents Entering and Exiting a Node

At each node on the negative "rail" (wire 8-7-6-5) we have current splitting off the main flow to each successive branch resistor. At each node on the positive "rail" (wire 1-2-3-4) we have current merging together to form the main flow from each successive branch resistor. This fact should be fairly obvious if you think of the water pipe circuit analogy with every branch node acting as a "tee" fitting, the water flow splitting or merging with the main piping as it travels from the output of the water pump toward the return reservoir or sump.

If we were to take a closer look at one particular "tee" node, such as node 3, we see that the current entering the node is equal in magnitude to the current exiting the node:

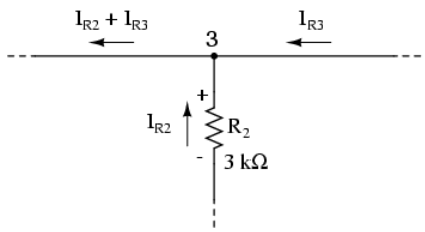

From the right and from the bottom, we have two currents entering the wire connection labeled as node 3. To the left, we have a single current exiting the node equal in magnitude to the sum of the two currents entering. To refer to the plumbing analogy: so long as there are no leaks in the piping, what flow enters the fitting must also exit the fitting. This holds true for any node ("fitting"), no matter how many flows are entering or exiting. Mathematically, we can express this general relationship as such:

$$I_{exiting} = I_{entering}$$

Kirchhoff's Current Law

Mr. Kirchhoff decided to express the above equation in a slightly different form (though mathematically equivalent), calling it *Kirchhoff's Current Law* (KCL):

$$I_{entering} + (-I_{exiting}) = 0$$

Summarized in a phrase, Kirchhoff's Current Law reads as such:
"The algebraic sum of all currents entering and exiting a node must equal zero."

That is, if we assign a mathematical sign (polarity) to each current, denoting whether they enter (+) or exit (-) a node, we can add them together to arrive at a total of zero, guaranteed.

Taking our example node (number 3), we can determine the magnitude of the current exiting from the left by setting up a KCL equation with that current as the unknown value:

$$I_2 + I_3 + I = 0$$

$$2\text{ mA} + 3\text{ mA} + I = 0$$

. . . solving for *I* . . .

$$I = -2\text{ mA} - 3\text{ mA}$$

$$\mathbf{I = -5\text{ mA}}$$

The negative (-) sign on the value of 5 milliamps tells us that the current is *exiting* the node, as opposed to the 2 milliamp and 3 milliamp currents, which must both be positive (and therefore *entering* the node). Whether negative or positive denotes current entering or exiting is entirely arbitrary, so long as they are opposite signs for opposite directions and we stay consistent in our notation, KCL will work.

Together, Kirchhoff's Voltage and Current Laws are a formidable pair of tools useful in analyzing electric circuits. Their usefulness will become all the more apparent in a later chapter ("Network Analysis"), but suffice it to say that these Laws deserve to be memorized by the electronics student every bit as much as Ohm's Law.

REVIEW

- Kirchhoff's Current Law (KCL): *"The algebraic sum of all currents entering and exiting a node must equal zero"*

This page titled 6.4: Kirchhoff's Current Law (KCL) is shared under a GNU Free Documentation License 1.3 license and was authored, remixed, and/or curated by Tony R. Kuphaldt (All About Circuits) via source content that was edited to the style and standards of the LibreTexts platform.

CHAPTER OVERVIEW

7: Series-parallel Combination Circuits

7.1: What is a Series-Parallel Circuit?
7.2: Analysis Techniques for Series Parallel Resistor Circuits
7.3: Re-drawing Complex Schematics
7.4: Component Failure Analysis (Continued)
7.5: Building Series-Parallel Resistor Circuits

This page titled 7: Series-parallel Combination Circuits is shared under a GNU Free Documentation License 1.3 license and was authored, remixed, and/or curated by Tony R. Kuphaldt (All About Circuits) via source content that was edited to the style and standards of the LibreTexts platform.

7.1: What is a Series-Parallel Circuit?

With simple series circuits, all components are connected end-to-end to form only one path for electrons to flow through the circuit:

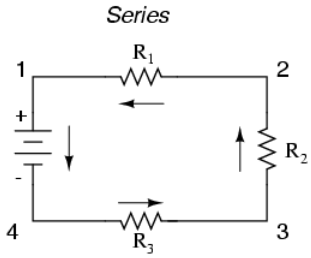

With simple parallel circuits, all components are connected between the same two sets of electrically common points, creating multiple paths for electrons to flow from one end of the battery to the other:

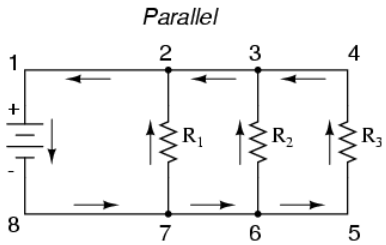

With each of these two basic circuit configurations, we have specific sets of rules describing voltage, current, and resistance relationships.

- **Series Circuits:**
- Voltage drops add to equal total voltage.
- All components share the same (equal) current.
- Resistances add to equal total resistance.

- **Parallel Circuits:**
- All components share the same (equal) voltage.
- Branch currents add to equal total current.
- Resistances diminish to equal total resistance.

However, if circuit components are series-connected in some parts and parallel in others, we won't be able to apply a *single* set of rules to every part of that circuit. Instead, we will have to identify which parts of that circuit are series and which parts are parallel, then selectively apply series and parallel rules as necessary to determine what is happening. Take the following circuit, for instance:

A series-parallel combination circuit

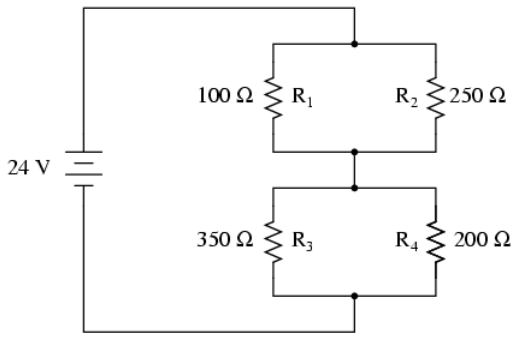

	R_1	R_2	R_3	R_4	Total	
E					24	Volts
I						Amps
R	100	250	350	200		Ohms

This circuit is neither simple series nor simple parallel. Rather, it contains elements of both. The current exits the bottom of the battery, splits up to travel through R_3 and R_4, rejoins, then splits up again to travel through R_1 and R_2, then rejoins again to return to the top of the battery. There exists more than one path for current to travel (not series), yet there are more than two sets of electrically common points in the circuit (not parallel).

Because the circuit is a combination of both series and parallel, we cannot apply the rules for voltage, current, and resistance "across the table" to begin analysis like we could when the circuits were one way or the other. For instance, if the above circuit were simple series, we could just add up R_1 through R_4 to arrive at a total resistance, solve for total current, and then solve for all voltage drops. Likewise, if the above circuit were simple parallel, we could just solve for branch currents, add up branch currents to figure the total current, and then calculate total resistance from total voltage and total current. However, this circuit's solution will be more complex.

The table will still help us manage the different values for series-parallel combination circuits, but we'll have to be careful how and where we apply the different rules for series and parallel. Ohm's Law, of course, still works just the same for determining values within a vertical column in the table.

If we are able to identify which parts of the circuit are series and which parts are parallel, we can analyze it in stages, approaching each part one at a time, using the appropriate rules to determine the relationships of voltage, current, and resistance. The rest of this chapter will be devoted to showing you techniques for doing this.

Review

- The rules of series and parallel circuits must be applied selectively to circuits containing both types of interconnections.

This page titled 7.1: What is a Series-Parallel Circuit? is shared under a GNU Free Documentation License 1.3 license and was authored, remixed, and/or curated by Tony R. Kuphaldt (All About Circuits) via source content that was edited to the style and standards of the LibreTexts platform.

7.2: Analysis Techniques for Series Parallel Resistor Circuits

Process of Series-Parallel Resistor Circuit Analysis

The goal of series-parallel resistor circuit analysis is to be able to determine all voltage drops, currents, and power dissipations in a circuit. The general strategy to accomplish this goal is as follows:

- Step 1: Assess which resistors in a circuit are connected together in simple series or simple parallel.
- Step 2: Re-draw the circuit, replacing each of those series or parallel resistor combinations identified in step 1 with a single, equivalent-value resistor. If using a table to manage variables, make a new table column for each resistance equivalent.
- Step 3: Repeat steps 1 and 2 until the entire circuit is reduced to one equivalent resistor.
- Step 4: Calculate total current from total voltage and total resistance (I=E/R).
- Step 5: Taking total voltage and total current values, go back to last step in the circuit reduction process and insert those values where applicable.
- Step 6: From known resistances and total voltage / total current values from step 5, use Ohm's Law to calculate unknown values (voltage or current) (E=IR or I=E/R).
- Step 7: Repeat steps 5 and 6 until all values for voltage and current are known in the original circuit configuration. Essentially, you will proceed step-by-step from the simplified version of the circuit back into its original, complex form, plugging in values of voltage and current where appropriate until all values of voltage and current are known.
- Step 8: Calculate power dissipations from known voltage, current, and/or resistance values.

This may sound like an intimidating process, but its much easier understood through example than through description.

A series-parallel combination circuit

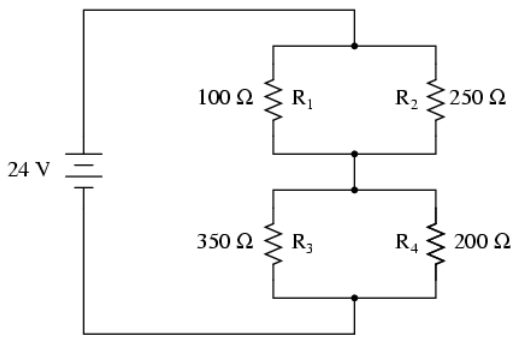

	R_1	R_2	R_3	R_4	Total	
E					24	Volts
I						Amps
R	100	250	350	200		Ohms

In the example circuit above, R_1 and R_2 are connected in a simple parallel arrangement, as are R_3 and R_4. Having been identified, these sections need to be converted into equivalent single resistors, and the circuit re-drawn:

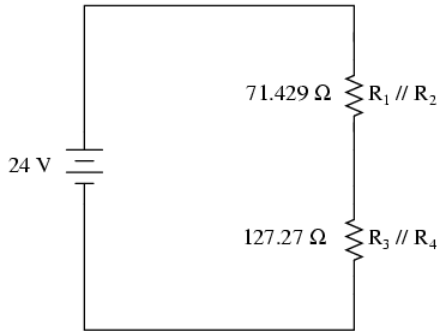

The double slash (//) symbols represent "parallel" to show that the equivalent resistor values were calculated using the 1/(1/R) formula. The 71.429 Ω resistor at the top of the circuit is the equivalent of $R_1$and R_2 in parallel with each other. The 127.27 Ω resistor at the bottom is the equivalent of R_3 and R_4 in parallel with each other.

Our table can be expanded to include these resistor equivalents in their own columns:

	R_1	R_2	R_3	R_4	R_1 // R_2	R_3 // R_4	Total	
E							24	Volts
I								Amps
R	100	250	350	200	**71.429**	**127.27**		Ohms

It should be apparent now that the circuit has been reduced to a simple series configuration with only two (equivalent) resistances. The final step in reduction is to add these two resistances to come up with a total circuit resistance. When we add those two equivalent resistances, we get a resistance of 198.70 Ω. Now, we can re-draw the circuit as a single equivalent resistance and add the total resistance figure to the rightmost column of our table. Note that the "Total" column has been relabeled (R_1//R_2—R_3//R_4) to indicate how it relates electrically to the other columns of figures. The "—" symbol is used here to represent "series," just as the "//" symbol is used to represent "parallel."

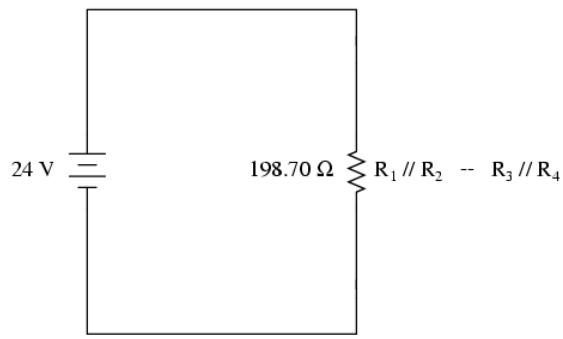

	R_1	R_2	R_3	R_4	R_1 // R_2	R_3 // R_4	R_1 // R_2 — R_3 // R_4 Total	
E							24	Volts
I								Amps
R	100	250	350	200	71.429	127.27	**198.70**	Ohms

Now, total circuit current can be determined by applying Ohm's Law (I=E/R) to the "Total" column in the table:

	R_1	R_2	R_3	R_4	R_1 // R_2	R_3 // R_4	R_1 // R_2 — R_3 // R_4 Total	
E							24	Volts
I							**120.78m**	Amps
R	100	250	350	200	71.429	127.27	198.70	Ohms

Back to our equivalent circuit drawing, our total current value of 120.78 milliamps is shown as the only current here:

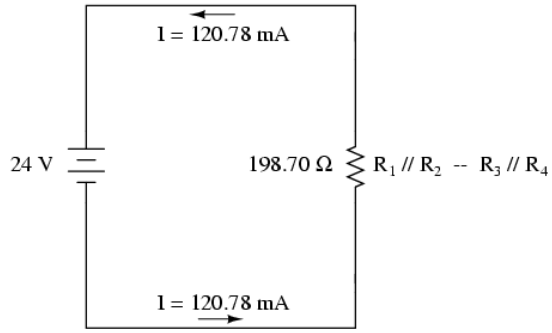

Now we start to work backwards in our progression of circuit re-drawings to the original configuration. The next step is to go to the circuit where $R_1//R_2$ and $R_3//R_4$ are in series:

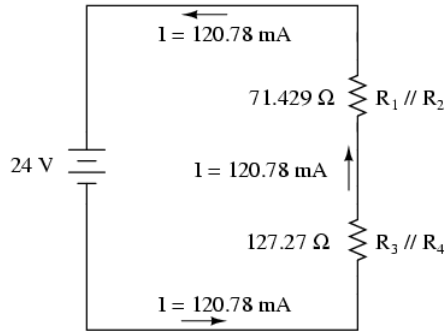

Since $R_1//R_2$ and $R_3//R_4$ are in series with each other, the current through those two sets of equivalent resistances must be the same. Furthermore, the current through them must be the same as the total current, so we can fill in our table with the appropriate current values, simply copying the current figure from the Total column to the $R_1//R_2$ and $R_3//R_4$ columns:

	R_1	R_2	R_3	R_4	$R_1 // R_2$	$R_3 // R_4$	$R_1 // R_2$ – $R_3 // R_4$ Total	
E							24	Volts
I					**120.78m**	**120.78m**	120.78m	Amps
R	100	250	350	200	71.429	127.27	198.70	Ohms

Now, knowing the current through the equivalent resistors $R_1//R_2$ and $R_3//R_4$, we can apply Ohm's Law (E=IR) to the two right vertical columns to find voltage drops across them:

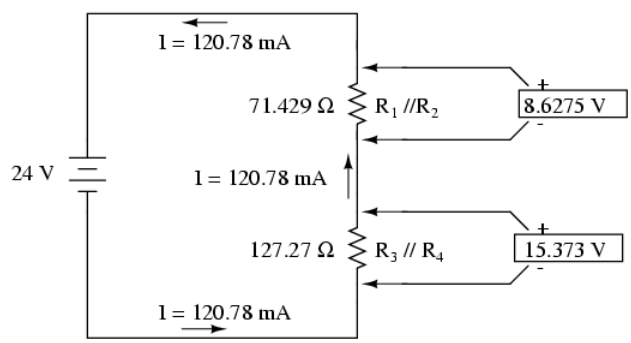

	R_1	R_2	R_3	R_4	$R_1 // R_2$	$R_3 // R_4$	$R_1 // R_2$ – $R_3 // R_4$ Total	
E					**8.6275**	**15.373**	24	Volts
I					120.78m	120.78m	120.78m	Amps
R	100	250	350	200	71.429	127.27	198.70	Ohms

Because we know $R_1//R_2$ and $R_3//R_4$ are parallel resistor equivalents, and we know that voltage drops in parallel circuits are the same, we can transfer the respective voltage drops to the appropriate columns on the table for those individual resistors. In other words, we take another step backwards in our drawing sequence to the original configuration, and complete the table accordingly:

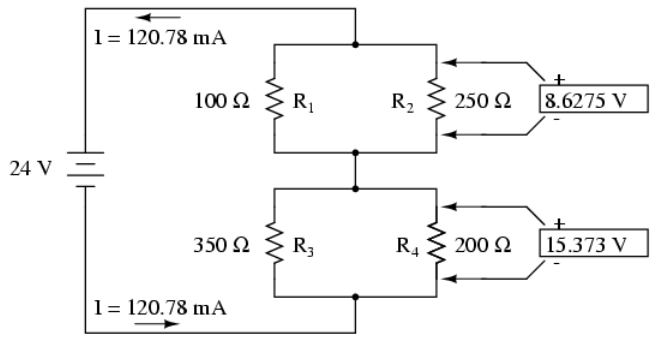

	R_1	R_2	R_3	R_4	$R_1 // R_2$	$R_3 // R_4$	$R_1 // R_2$ $R_3 // R_4$ Total	
E	**8.6275**	**8.6275**	**15.373**	**15.373**	8.6275	15.373	24	Volts
I					120.78m	120.78m	120.78m	Amps
R	100	250	350	200	71.429	127.27	198.70	Ohms

Finally, the original section of the table (columns R_1 through R_4) is complete with enough values to finish. Applying Ohm's Law to the remaining vertical columns (I=E/R), we can determine the currents through R_1, R_2, R_3, and R_4 individually:

	R_1	R_2	R_3	R_4	$R_1 // R_2$	$R_3 // R_4$	$R_1 // R_2$ $R_3 // R_4$ Total	
E	8.6275	8.6275	15.373	15.373	8.6275	15.373	24	Volts
I	**86.275m**	**34.510m**	**43.922m**	**76.863m**	120.78m	120.78m	120.78m	Amps
R	100	250	350	200	71.429	127.27	198.70	Ohms

Placing Voltage and Current Values into Diagrams

Having found all voltage and current values for this circuit, we can show those values in the schematic diagram as such:

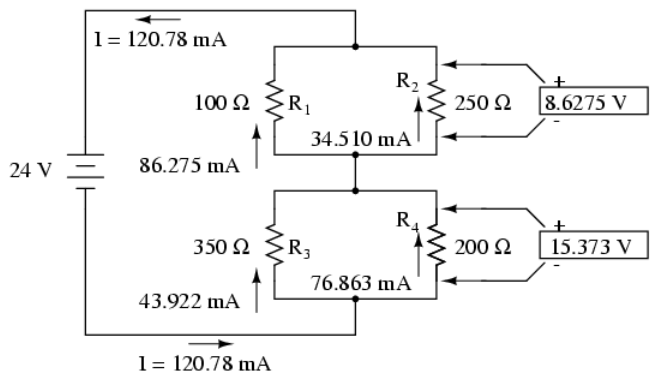

As a final check of our work, we can see if the calculated current values add up as they should to the total. Since R_1 and R_2 are in parallel, their combined currents should add up to the total of 120.78 mA. Likewise, since R_3 and R_4 are in parallel, their combined currents should also add up to the total of 120.78 mA. You can check for yourself to verify that these figures do add up as expected.

A computer simulation can also be used to verify the accuracy of these figures. The following SPICE analysis will show all resistor voltages and currents (note the current-sensing vi1, vi2, . . . "dummy" voltage sources in series with each resistor in the netlist, necessary for the SPICE computer program to track current through each path). These voltage sources will be set to have values of zero volts each so they will not affect the circuit in any way.

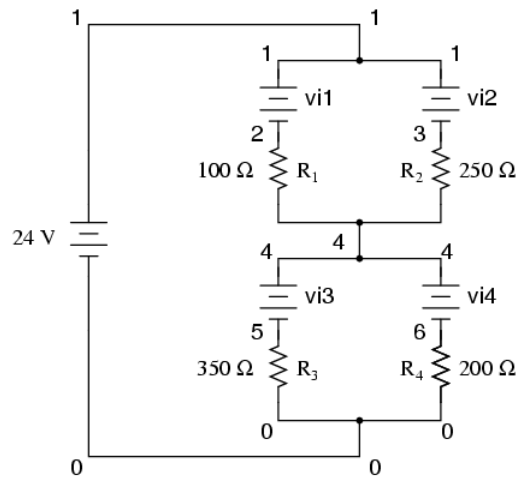

NOTE: voltage sources vi1, vi2, vi3, and vi4 are "dummy" sources set at zero volts each.

```
v1 v(2,4) v(3,4) v(5) v(6) 2.400E+01 8.627E+00 8.627E+00 1.537E+01 1.537E+01 Battery R1 voltage R2 voltage
R3 voltage R4 voltage voltage v1 i(vi1) i(vi2) i(vi3) i(vi4) 2.400E+01 8.627E-02 3.451E-02 4.392E-02 7.686
E-02 Battery R1 current R2 current R3 current R4 current voltage
```

I've annotated SPICE's output figures to make them more readable, denoting which voltage and current figures belong to which resistors.


```
v1 v(2,4) v(3,4) v(5) v(6) 2.400E+01 8.627E+00 8.627E+00 1.537E+01 1.537E+01 Battery R1 voltage R2 voltage
R3 voltage R4 voltage voltage v1 i(vi1) i(vi2) i(vi3) i(vi4) 2.400E+01 8.627E-02 3.451E-02 4.392E-02 7.686
E-02 Battery R1 current R2 current R3 current R4 current voltage
```


As you can see, all the figures do agree with our calculated values.

Review

- To analyze a series-parallel combination circuit, follow these steps:
- Reduce the original circuit to a single equivalent resistor, re-drawing the circuit in each step of reduction as simple series and simple parallel parts are reduced to single, equivalent resistors.
- Solve for total resistance.
- Solve for total current (I=E/R).
- Determine equivalent resistor voltage drops and branch currents one stage at a time, working backwards to the original circuit configuration again.

This page titled 7.2: Analysis Techniques for Series Parallel Resistor Circuits is shared under a GNU Free Documentation License 1.3 license and was authored, remixed, and/or curated by Tony R. Kuphaldt (All About Circuits) via source content that was edited to the style and standards of the LibreTexts platform.

7.3: Re-drawing Complex Schematics

Typically, complex circuits are not arranged in nice, neat, clean schematic diagrams for us to follow. They are often drawn in such a way that makes it difficult to follow which components are in series and which are in parallel with each other. The purpose of this section is to show you a method useful for re-drawing circuit schematics in a neat and orderly fashion. Like the stage-reduction strategy for solving series-parallel combination circuits, it is a method easier demonstrated than described.

Let's start with the following (convoluted) circuit diagram. Perhaps this diagram was originally drawn this way by a technician or engineer. Perhaps it was sketched as someone traced the wires and connections of a real circuit. In any case, here it is in all its ugliness:

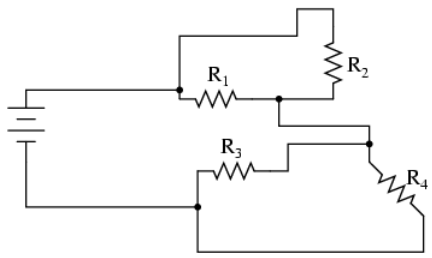

With electric circuits and circuit diagrams, the length and routing of wire connecting components in a circuit matters little. (Actually, in some AC circuits it becomes critical, and very long wire lengths can contribute unwanted resistance to both AC and DC circuits, but in most cases wire length is irrelevant.) What this means for us is that we can lengthen, shrink, and/or bend connecting wires without affecting the operation of our circuit.

The strategy I have found easiest to apply is to start by tracing the current from one terminal of the battery around to the other terminal, following the loop of components closest to the battery and ignoring all other wires and components for the time being. While tracing the path of the loop, mark each resistor with the appropriate polarity for voltage drop.

In this case, I'll begin my tracing of this circuit at the negative terminal of the battery and finish at the positive terminal, in the same general direction as the electrons would flow. When tracing this direction, I will mark each resistor with the polarity of negative on the entering side and positive on the exiting side, for that is how the actual polarity will be as electrons (negative in charge) enter and exit a resistor:

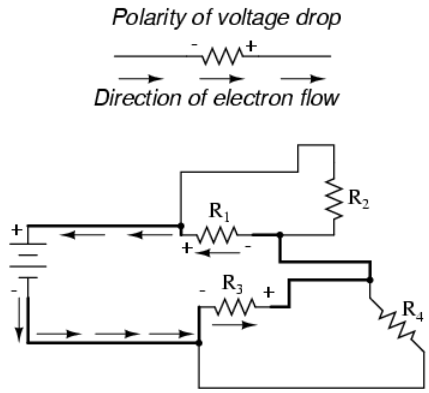

Any components encountered along this short loop are drawn vertically in order:

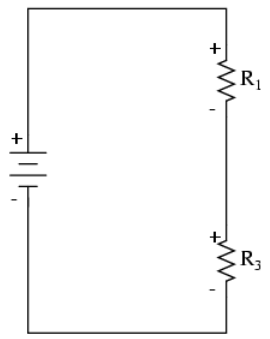

Now, proceed to trace any loops of components connected around components that were just traced. In this case, there's a loop around R_1 formed by R_2, and another loop around R_3 formed by R_4:

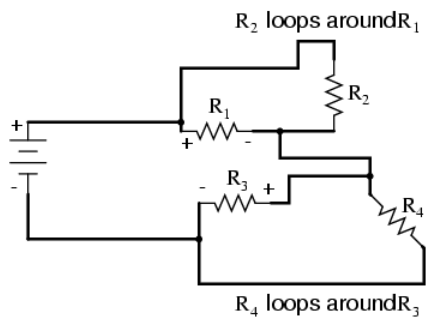

Tracing those loops, I draw R_2 and R_4 in parallel with R_1 and R_3 (respectively) on the vertical diagram. Noting the polarity of voltage drops across R_3 and R_1, I mark R_4 and R_2 likewise:

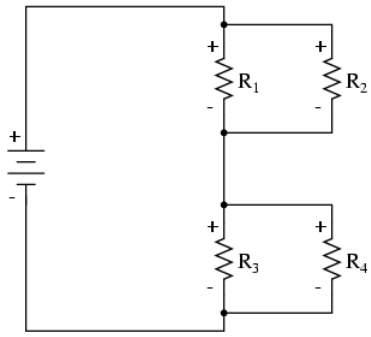

Now we have a circuit that is very easily understood and analyzed. In this case, it is identical to the four-resistor series-parallel configuration we examined earlier in the chapter.

Let's look at another example, even uglier than the one before:

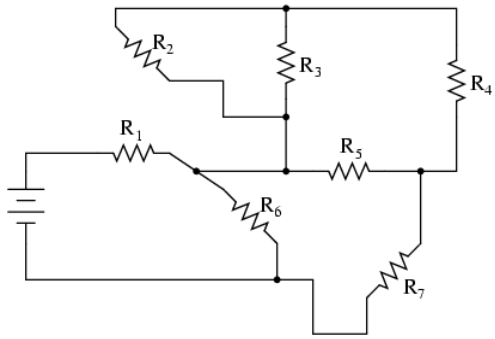

The first loop I'll trace is from the negative (-) side of the battery, through R_6, through R_1, and back to the positive (+) end of the battery:

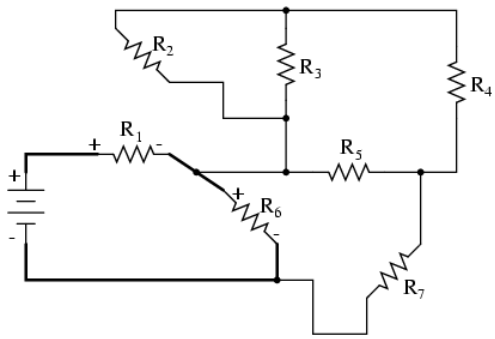

Re-drawing vertically and keeping track of voltage drop polarities along the way, our equivalent circuit starts out looking like this:

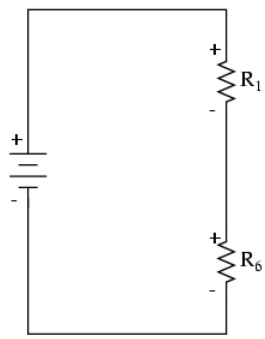

Next, we can proceed to follow the next loop around one of the traced resistors (R_6), in this case, the loop formed by R_5 and R_7. As before, we start at the negative end of R_6 and proceed to the positive end of R_6, marking voltage drop polarities across R_7 and R_5 as we go:

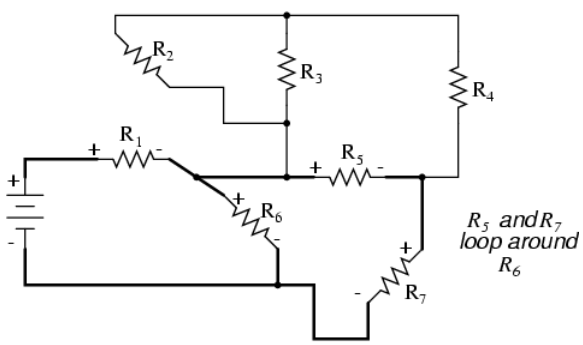

Now we add the R_5—R_7 loop to the vertical drawing. Notice how the voltage drop polarities across R_7 and R_5 correspond with that of R_6, and how this is the same as what we found tracing R_7 and R_5 in the original circuit:

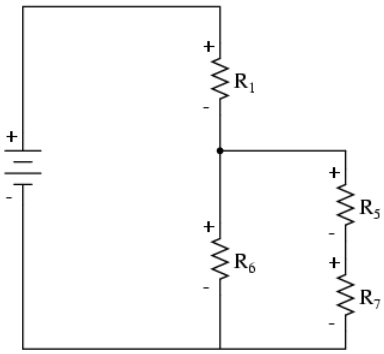

We repeat the process again, identifying and tracing another loop around an already-traced resistor. In this case, the R_3—R_4 loop around R_5 looks like a good loop to trace next:

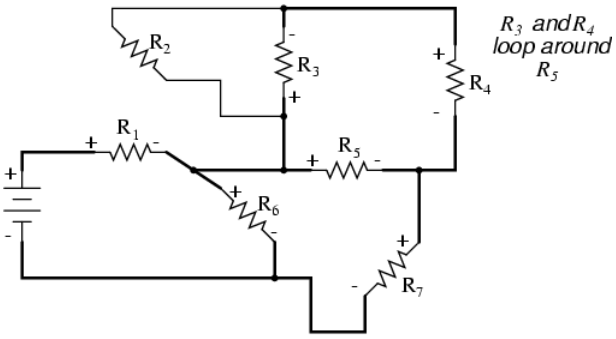

Adding the R_3—R_4 loop to the vertical drawing, marking the correct polarities as well:

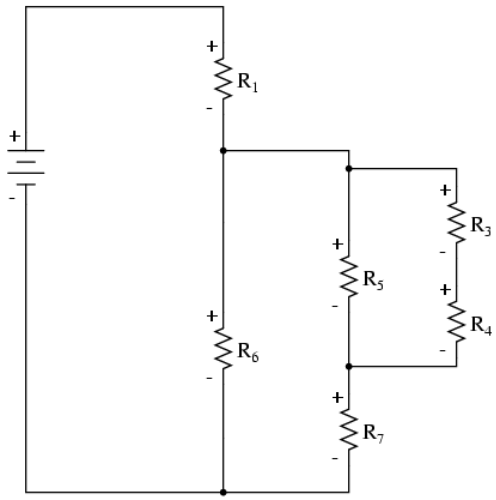

With only one remaining resistor left to trace, then next step is obvious: trace the loop formed by R_2 around R_3:

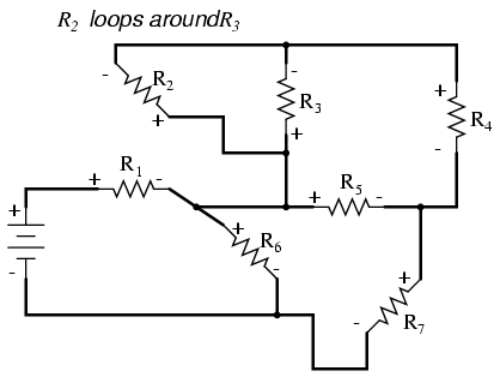

Adding R_2 to the vertical drawing, and we're finished! The result is a diagram that's very easy to understand compared to the original:

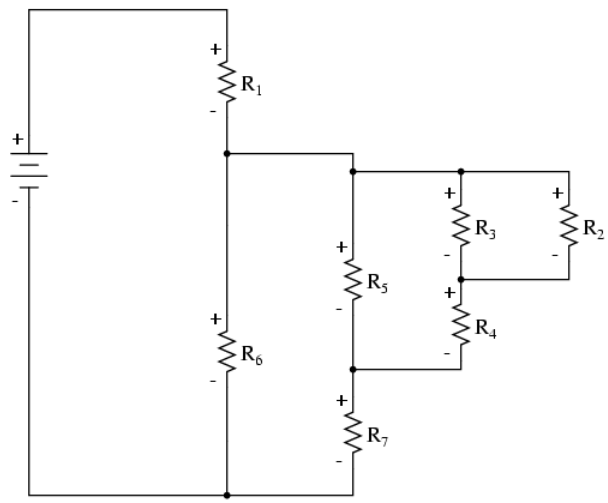

This simplified layout greatly eases the task of determining where to start and how to proceed in reducing the circuit down to a single equivalent (total) resistance. Notice how the circuit has been re-drawn, all we have to do is start from the right-hand side and work our way left, reducing simple-series and simple-parallel resistor combinations one group at a time until we're done.

In this particular case, we would start with the simple parallel combination of R_2 and R_3, reducing it to a single resistance. Then, we would take that equivalent resistance ($R_2//R_3$) and the one in series with it (R_4), reducing them to another equivalent resistance ($R_2//R_3$—R_4). Next, we would proceed to calculate the parallel equivalent of that resistance ($R_2//R_3$—R_4) with R_5, then in series with R_7, then in parallel with R_6, then in series with R_1 to give us a grand total resistance for the circuit as a whole.

From there we could calculate total current from total voltage and total resistance (I=E/R), then "expand" the circuit back into its original form one stage at a time, distributing the appropriate values of voltage and current to the resistances as we go.

Review

- Wires in diagrams and in real circuits can be lengthened, shortened, and/or moved without affecting circuit operation.
- To simplify a convoluted circuit schematic, follow these steps:
- Trace current from one side of the battery to the other, following any single path ("loop") to the battery. Sometimes it works better to start with the loop containing the most components, but regardless of the path taken the result will be accurate. Mark polarity of voltage drops across each resistor as you trace the loop. Draw those components you encounter along this loop in a vertical schematic.
- Mark traced components in the original diagram and trace remaining loops of components in the circuit. Use polarity marks across traced components as guides for what connects where. Document new components in loops on the vertical re-draw schematic as well.
- Repeat last step as often as needed until all components in original diagram have been traced.

This page titled 7.3: Re-drawing Complex Schematics is shared under a GNU Free Documentation License 1.3 license and was authored, remixed, and/or curated by Tony R. Kuphaldt (All About Circuits) via source content that was edited to the style and standards of the LibreTexts platform.

7.4: Component Failure Analysis (Continued)

> ***"I consider that I understand an equation when I can predict the properties of its solutions, without actually solving it."***
>
> ***—P.A.M Dirac, physicist***

There is a lot of truth to that quote from Dirac. With a little modification, I can extend his wisdom to electric circuits by saying, "I consider that I understand a circuit when I can predict the approximate effects of various changes made to it without actually performing any calculations."

At the end of the series and parallel circuits chapter, we briefly considered how circuits could be analyzed in a *qualitative* rather than *quantitative* manner. Building this skill is an important step towards becoming a proficient troubleshooter of electric circuits. Once you have a thorough understanding of how any particular failure will affect a circuit (i.e. you don't have to perform any arithmetic to predict the results), it will be much easier to work the other way around: pinpointing the source of trouble by assessing how a circuit is behaving.

Also shown at the end of the series and parallel circuits chapter was how the table method works just as well for aiding failure analysis as it does for the analysis of healthy circuits. We may take this technique one step further and adapt it for total qualitative analysis. By *"qualitative"* I mean working with symbols representing "increase," "decrease," and "same" instead of precise numerical figures. We can still use the principles of series and parallel circuits, and the concepts of Ohm's Law, we'll just use symbolic qualities instead of numerical *quantities*. By doing this, we can gain more of an intuitive "feel" for how circuits work rather than leaning on abstract equations, attaining Dirac's definition of "understanding."

Enough talk. Let's try this technique on a real circuit example and see how it works:

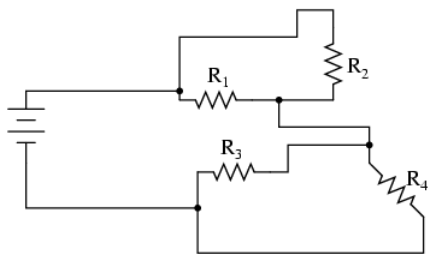

This is the first "convoluted" circuit we straightened out for analysis in the last section. Since you already know how this particular circuit reduces to series and parallel sections, I'll skip the process and go straight to the final form:

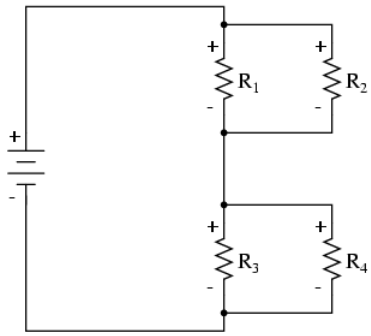

R_3 and R_4 are in parallel with each other; so are R_1 and R_2. The parallel equivalents of $R_3//R_4$ and $R_1//R_2$are in series with each other. Expressed in symbolic form, the total resistance for this circuit is as follows:

$R_{Total} = (R_1//R_2)—(R_3//R_4)$

First, we need to formulate a table with all the necessary rows and columns for this circuit:

	R_1	R_2	R_3	R_4	R_1 // R_2	R_3 // R_4	Total	
E								Volts
I								Amps
R								Ohms

Next, we need a failure scenario. Let's suppose that resistor R_2 were to fail shorted. We will assume that all other components maintain their original values. Because we'll be analyzing this circuit qualitatively rather than quantitatively, we won't be inserting any real numbers into the table. For any quantity unchanged after the component failure, we'll use the word "same" to represent "no change from before." For any quantity that has changed as a result of the failure, we'll use a down arrow for "decrease" and an up arrow for "increase." As usual, we start by filling in the spaces of the table for individual resistances and total voltage, our "given" values:

	R_1	R_2	R_3	R_4	R_1 // R_2	R_3 // R_4	Total	
E							same	Volts
I								Amps
R	same	↓	same	same				Ohms

The only "given" value different from the normal state of the circuit is R_2, which we said was failed shorted (abnormally low resistance). All other initial values are the same as they were before, as represented by the "same" entries. All we have to do now is work through the familiar Ohm's Law and series-parallel principles to determine what will happen to all the other circuit values.

First, we need to determine what happens to the resistances of parallel subsections R_1//R_2 and R_3//R_4. If neither R_3 nor R_4 have changed in resistance value, then neither will their parallel combination. However, since the resistance of R_2 has decreased while R_1 has stayed the same, their parallel combination must decrease in resistance as well:

	R_1	R_2	R_3	R_4	R_1 // R_2	R_3 // R_4	Total	
E							same	Volts
I								Amps
R	same	↓	same	same	↓	same		Ohms

Now, we need to figure out what happens to the total resistance. This part is easy: when we're dealing with only one component change in the circuit, the change in total resistance will be in the same direction as the change of the failed component. This is not to say that the *magnitude* of change between individual component and total circuit will be the same, merely the *direction* of change. In other words, if any single resistor decreases in value, then the total circuit resistance must also decrease, and vice versa. In this case, since R_2 is the only failed component, and its resistance has decreased, the total resistance *must* decrease:

	R_1	R_2	R_3	R_4	R_1 // R_2	R_3 // R_4	Total	
E							same	Volts
I								Amps
R	same	↓	same	same	↓	same	↓	Ohms

Now we can apply Ohm's Law (qualitatively) to the Total column in the table. Given the fact that total voltage has remained the same and total resistance has decreased, we can conclude that total current must increase (I=E/R).

In case you're not familiar with the qualitative assessment of an equation, it works like this. First, we write the equation as solved for the unknown quantity. In this case, we're trying to solve for current, given voltage and resistance:

$$I = \frac{E}{R}$$

Now that our equation is in the proper form, we assess what change (if any) will be experienced by "I," given the change(s) to "E" and "R":

$$I = \frac{E\ \text{(same)}}{R\ \downarrow}$$

If the denominator of a fraction decreases in value while the numerator stays the same, then the overall value of the fraction must increase:

$$\uparrow I = \frac{E}{R} \downarrow \text{(same)}$$

Therefore, Ohm's Law (I=E/R) tells us that the current (I) will increase. We'll mark this conclusion in our table with an "up" arrow:

	R_1	R_2	R_3	R_4	R_1 // R_2	R_3 // R_4	Total	
E							same	Volts
I							↑	Amps
R	same	↓	same	same	↓	same	↓	Ohms

With all resistance places filled in the table and all quantities determined in the Total column, we can proceed to determine the other voltages and currents. Knowing that the total resistance in this table was the result of R_1//R_2 and R_3//R_4 in *series*, we know that the value of total current will be the same as that in R_1//R_2 and R_3//R_4 (because series components share the same current). Therefore, if total current increased, then current through R_1//R_2 and R_3//R_4 must also have increased with the failure of R_2:

	R_1	R_2	R_3	R_4	R_1 // R_2	R_3 // R_4	Total	
E							same	Volts
I					↑	↑	↑	Amps
R	same	↓	same	same	↓	same	↓	Ohms

Fundamentally, what we're doing here with a qualitative usage of Ohm's Law and the rules of series and parallel circuits is no different from what we've done before with numerical figures. In fact, its a lot easier because you don't have to worry about making an arithmetic or calculator keystroke error in a calculation. Instead, you're just focusing on the *principles* behind the equations. From our table above, we can see that Ohm's Law should be applicable to the R_1//R_2 and R_3//R_4 columns. For R_3//R_4, we figure what happens to the voltage, given an increase in current and no change in resistance. Intuitively, we can see that this must result in an increase in voltage across the parallel combination of R_3//R_4:

	R_1	R_2	R_3	R_4	R_1 // R_2	R_3 // R_4	Total	
E						↑	same	Volts
I					↑	↑	↑	Amps
R	same	↓	same	same	↓	same	↓	Ohms

But how do we apply the same Ohm's Law formula (E=IR) to the R_1//R_2 column, where we have resistance decreasing *and* current increasing? It's easy to determine if only one variable is changing, as it was with R_3//R_4, but with two variables moving around and no definite numbers to work with, Ohm's Law isn't going to be much help. However, there is another rule we can apply *horizontally* to determine what happens to the voltage across R_1//R_2: the rule for voltage in series circuits. If the voltages across R_1//R_2 and R_3//R_4 add up to equal the total (battery) voltage and we know that the R_3//R_4 voltage has increased while total voltage has stayed the same, then the voltage across R_1//R_2 *must* have decreased with the change of R_2's resistance value:

	R_1	R_2	R_3	R_4	R_1 // R_2	R_3 // R_4	Total	
E					↓	↑	same	Volts
I					↑	↑	↑	Amps
R	same	↓	same	same	↓	same	↓	Ohms

Now we're ready to proceed to some new columns in the table. Knowing that R_3 and R_4 comprise the parallel subsection R_3//R_4, and knowing that voltage is shared equally between parallel components, the increase in voltage seen across the parallel combination R_3//R_4 must also be seen across R_3 and R_4individually:

	R_1	R_2	R_3	R_4	R_1 // R_2	R_3 // R_4	Total	
E			↑	↑	↓	↑	same	Volts
I					↑	↑	↑	Amps
R	same	↓	same	same	↓	same	↓	Ohms

The same goes for R_1 and R_2. The voltage decrease seen across the parallel combination of R_1 and R_2 will be seen across R_1 and R_2 individually:

	R_1	R_2	R_3	R_4	R_1 // R_2	R_3 // R_4	Total	
E	↓	↓	↑	↑	↓	↑	same	Volts
I					↑	↑	↑	Amps
R	same	↓	same	same	↓	same	↓	Ohms

Applying Ohm's Law vertically to those columns with unchanged ("same") resistance values, we can tell what the current will do through those components. Increased voltage across an unchanged resistance leads to increased current. Conversely, decreased voltage across an unchanged resistance leads to decreased current:

	R_1	R_2	R_3	R_4	R_1 // R_2	R_3 // R_4	Total	
E	↓	↓	↑	↑	↓	↑	same	Volts
I	↓		↑	↑	↑	↑	↑	Amps
R	same	↓	same	same	↓	same	↓	Ohms

Once again we find ourselves in a position where Ohm's Law can't help us: for R_2, both voltage and resistance have decreased, but without knowing *how much* each one has changed, we can't use the I=E/R formula to qualitatively determine the resulting change in current. However, we can still apply the rules of series and parallel circuits *horizontally*. We know that the current through the R_1//R_2 parallel combination has increased, and we also know that the current through R_1 has decreased. One of the rules of parallel circuits is that total current is equal to the sum of the individual branch currents. In this case, the current through R_1//R_2 is equal to the current through R_1 added to the current through R_2. If current through R_1//R_2has increased while current through R_1 has decreased, current through R_2 *must* have increased:

	R_1	R_2	R_3	R_4	R_1 // R_2	R_3 // R_4	Total	
E	↓	↓	↑	↑	↓	↑	same	Volts
I	↓	↑	↑	↑	↑	↑	↑	Amps
R	same	↓	same	same	↓	same	↓	Ohms

And with that, our table of qualitative values stands completed. This particular exercise may look laborious due to all the detailed commentary, but the actual process can be performed very quickly with some practice. An important thing to realize here is that the general procedure is little different from quantitative analysis: start with the known values, then proceed to determining total resistance, then total current, then transfer figures of voltage and current as allowed by the rules of series and parallel circuits to the appropriate columns.

A few general rules can be memorized to assist and/or to check your progress when proceeding with such an analysis:

- For any *single* component failure (open or shorted), the total resistance will always change in the same direction (either increase or decrease) as the resistance change of the failed component.
- When a component fails shorted, its resistance always decreases. Also, the current through it will increase, and the voltage across it *may* drop. I say "may" because in some cases it will remain the same (case in point: a simple parallel circuit with an ideal power source).
- When a component fails open, its resistance always increases. The current through that component will decrease to zero, because it is an incomplete electrical path (no continuity). This *may* result in an increase of voltage across it. The same exception stated above applies here as well: in a simple parallel circuit with an ideal voltage source, the voltage across an open-failed component will remain unchanged.

This page titled 7.4: Component Failure Analysis (Continued) is shared under a GNU Free Documentation License 1.3 license and was authored, remixed, and/or curated by Tony R. Kuphaldt (All About Circuits) via source content that was edited to the style and standards of the LibreTexts platform.

7.5: Building Series-Parallel Resistor Circuits

Once again, when building battery/resistor circuits, the student or hobbyist is faced with several different modes of construction. Perhaps the most popular is the *solderless breadboard*: a platform for constructing temporary circuits by plugging components and wires into a grid of interconnected points. A breadboard appears to be nothing but a plastic frame with hundreds of small holes in it. Underneath each hole, though, is a spring clip which connects to other spring clips beneath other holes. The connection pattern between holes is simple and uniform:

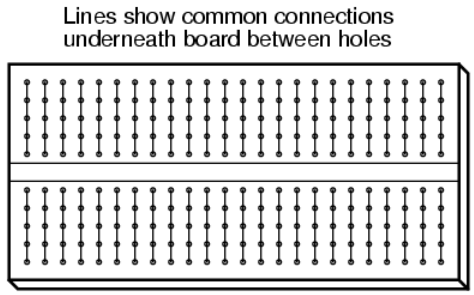

Suppose we wanted to construct the following series-parallel combination circuit on a breadboard:

A series-parallel combination circuit

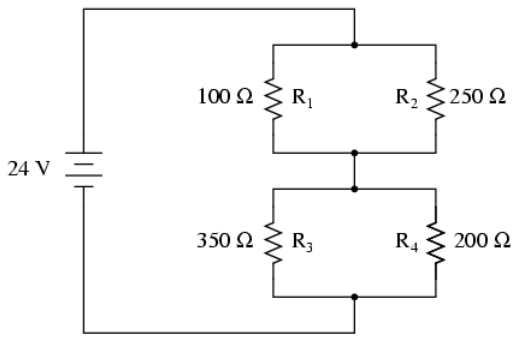

The recommended way to do so on a breadboard would be to arrange the resistors in approximately the same pattern as seen in the schematic, for ease of relation to the schematic. If 24 volts is required and we only have 6-volt batteries available, four may be connected in series to achieve the same effect:

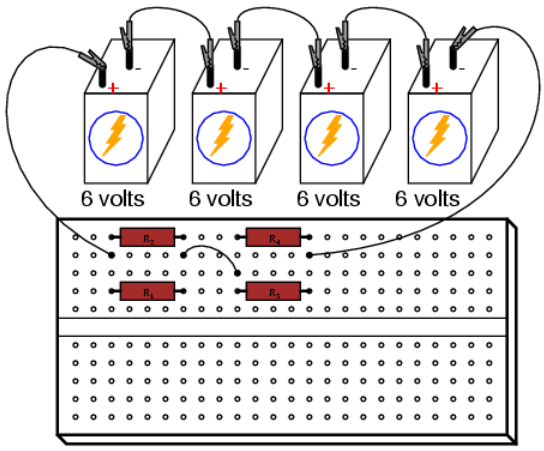

This is by no means the only way to connect these four resistors together to form the circuit shown in the schematic. Consider this alternative layout:

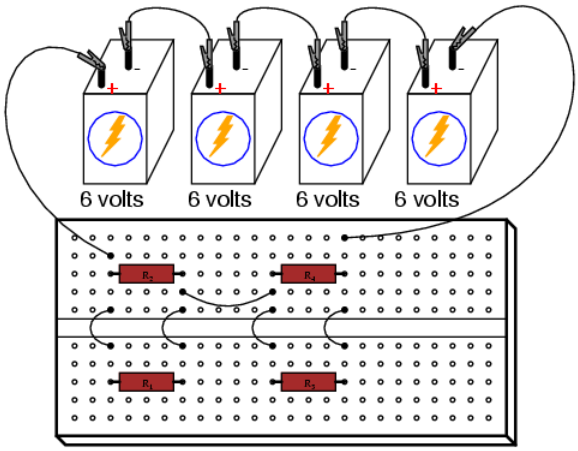

If greater permanence is desired without resorting to soldering or wire-wrapping, one could choose to construct this circuit on a *terminal strip* (also called a *barrier strip*, or *terminal block*). In this method, components and wires are secured by mechanical tension underneath screws or heavy clips attached to small metal bars. The metal bars, in turn, are mounted on a nonconducting body to keep them electrically isolated from each other.

Building a circuit with components secured to a terminal strip isn't as easy as plugging components into a breadboard, principally because the components cannot be physically arranged to resemble the schematic layout. Instead, the builder must understand how to "bend" the schematic's representation into the real-world layout of the strip. Consider one example of how the same four-resistor circuit could be built on a terminal strip:

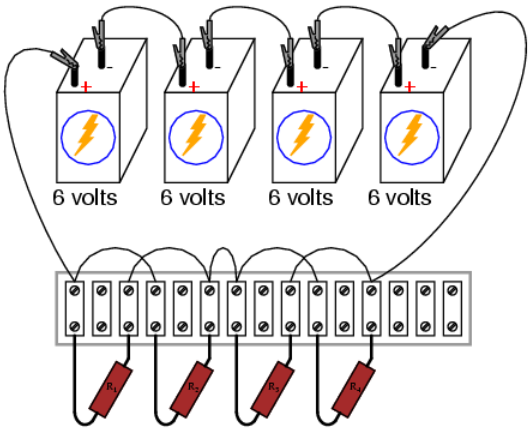

Another terminal strip layout, simpler to understand and relate to the schematic, involves anchoring parallel resistors ($R_1//R_2$ and $R_3//R_4$) to the same two terminal points on the strip like this:

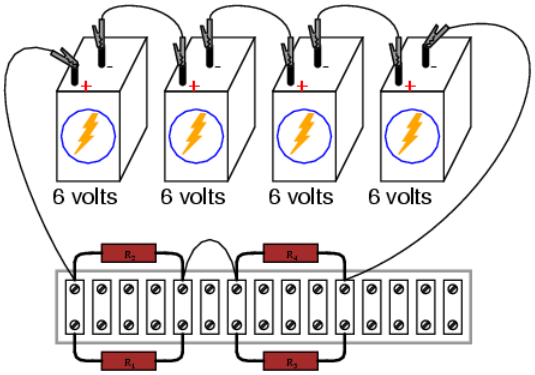

Building more complex circuits on a terminal strip involves the same spatial-reasoning skills, but of course requires greater care and planning. Take for instance this complex circuit, represented in schematic form:

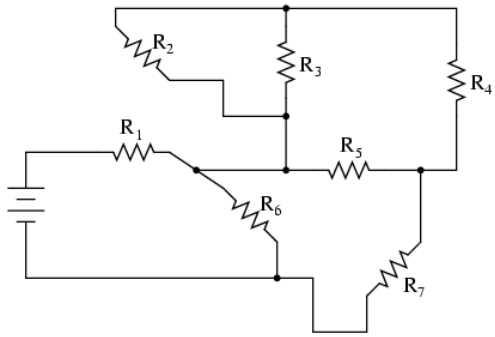

The terminal strip used in the prior example barely has enough terminals to mount all seven resistors required for this circuit! It will be a challenge to determine all the necessary wire connections between resistors, but with patience it can be done. First, begin by installing and labeling all resistors on the strip. The original schematic diagram will be shown next to the terminal strip circuit for reference:

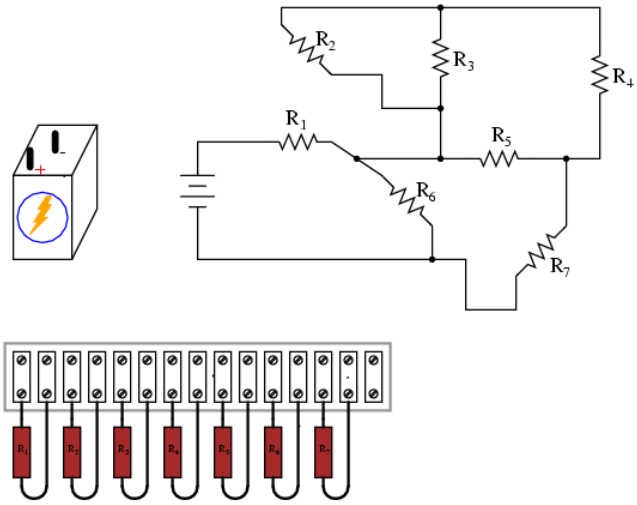

Next, begin connecting components together wire by wire as shown in the schematic. Over-draw connecting lines in the schematic to indicate completion in the real circuit. Watch this sequence of illustrations as each individual wire is identified in the schematic, then added to the real circuit:

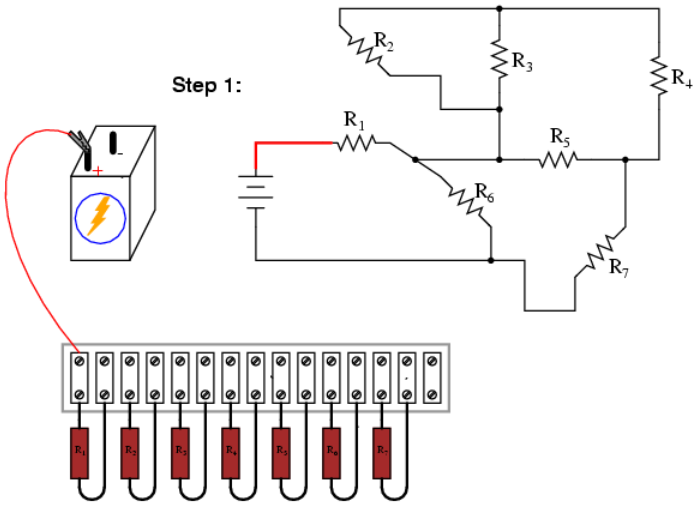

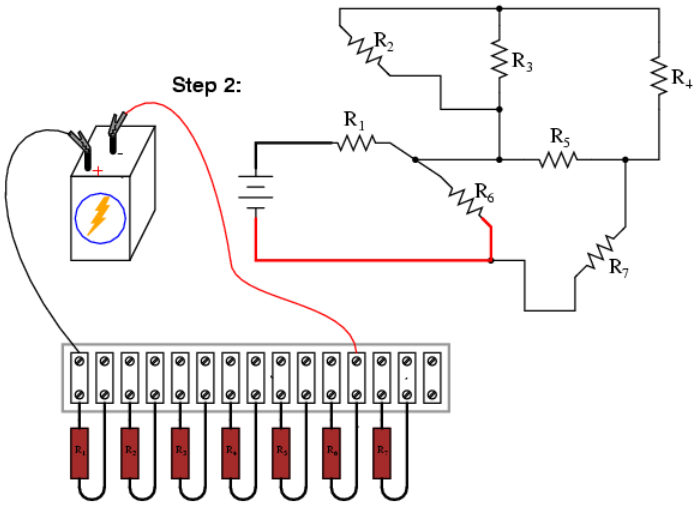
Step 2:
R2
R3
R4
R1
R5
R6
R7

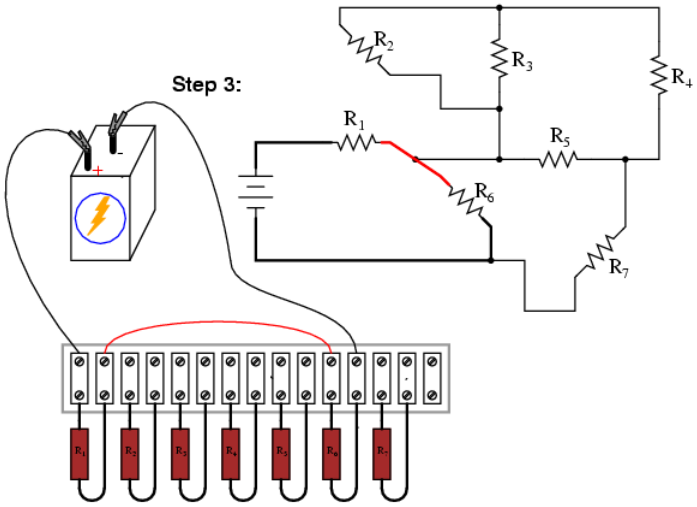
Step 3:
R2
R3
R4
R1
R5
R6
R7

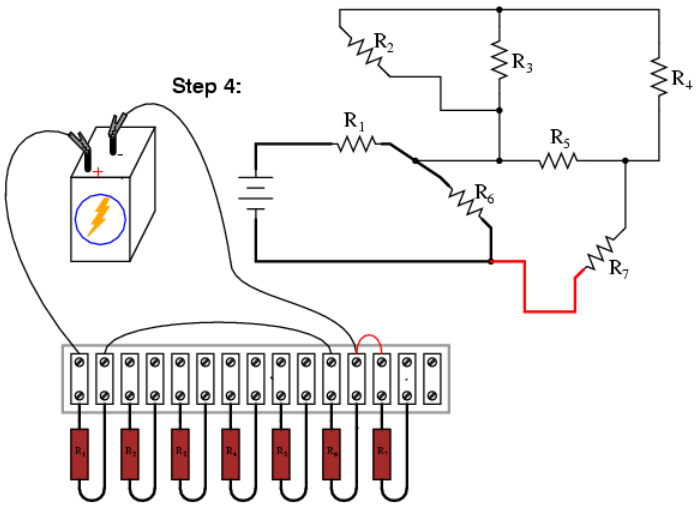
Step 4:
R2
R3
R4
R1
R5
R6
R7

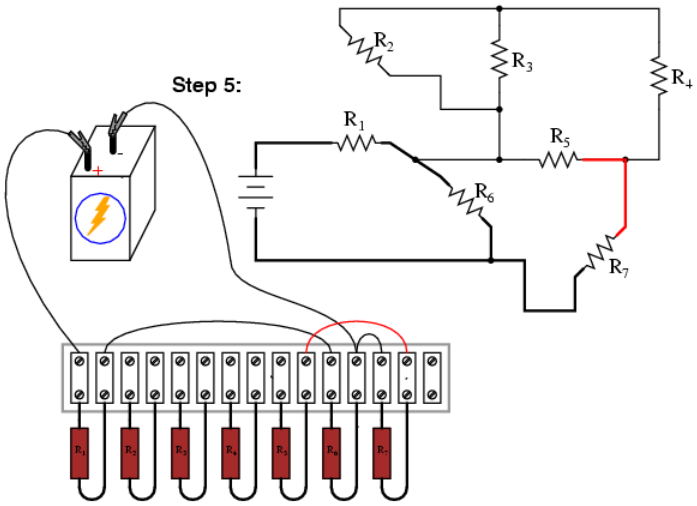
Step 5:
R2
R3
R4
R1
R5
R6
R7

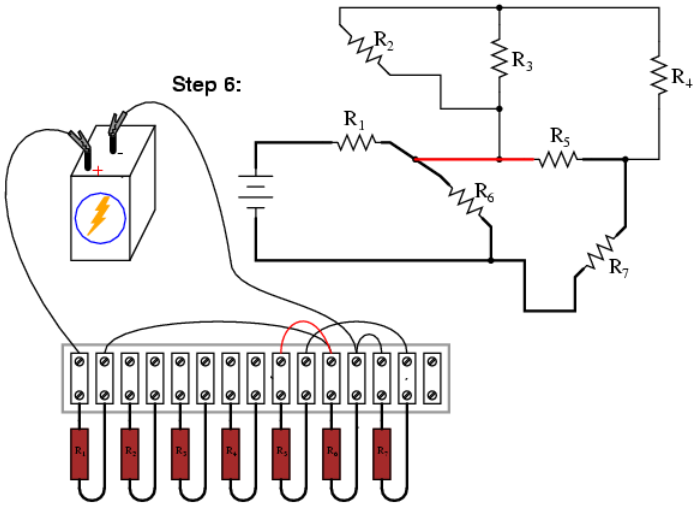
Step 6:
R2
R3
R4
R1
R5
R6
R7

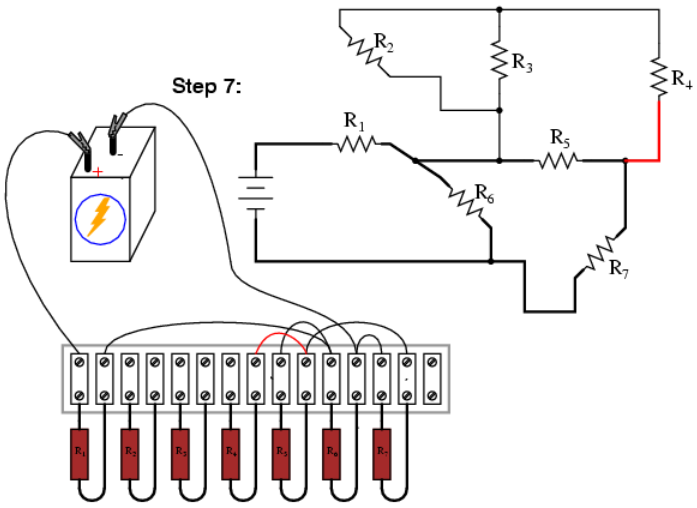
Step 7:
R2
R3
R4
R1
R5
R6
R7

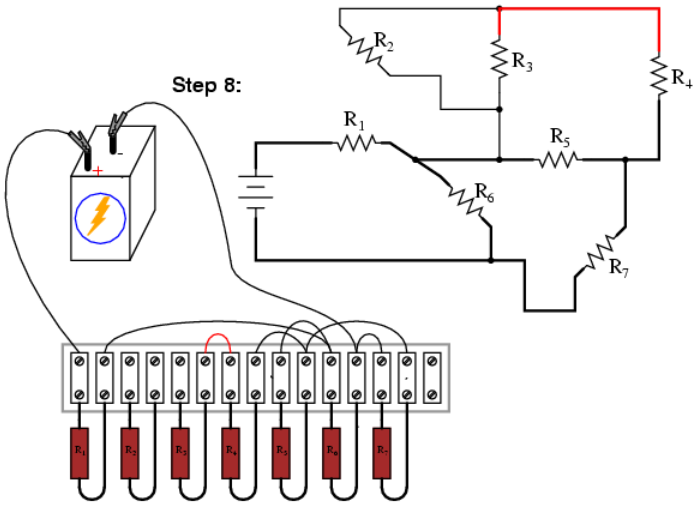
Step 8:
R2
R3
R4
R1
R5
R6
R7

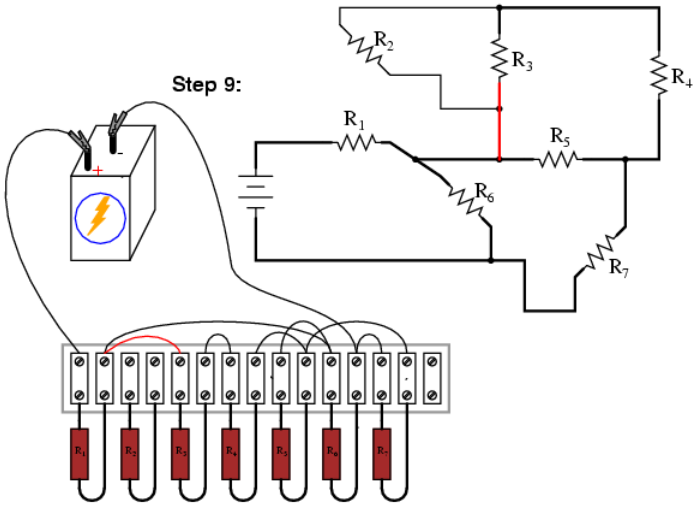
Step 9:
R2
R3
R4
R1
R5
R6
R7

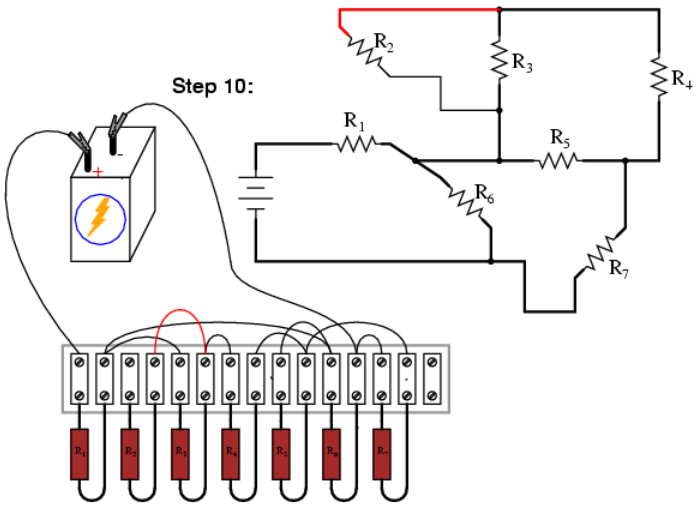
Step 10:
R2
R3
R4
R1
R5
R6
R7

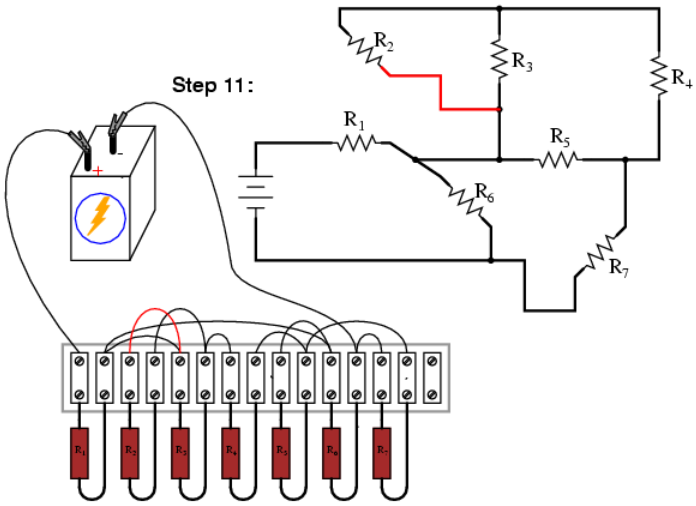

Although there are minor variations possible with this terminal strip circuit, the choice of connections shown in this example sequence is both electrically accurate (electrically identical to the schematic diagram) and carries the additional benefit of not burdening any one screw terminal on the strip with more than two wire ends, a good practice in any terminal strip circuit.

An example of a "variant" wire connection might be the very last wire added (step 11), which I placed between the left terminal of R_2 and the left terminal of R_3. This last wire completed the parallel connection between R_2 and R_3 in the circuit. However, I could have placed this wire instead between the left terminal of R_2 and the right terminal of R_1, since the right terminal of R_1 is already connected to the left terminal of R_3(having been placed there in step 9) and so is electrically common with that one point. Doing this, though, would have resulted in *three* wires secured to the right terminal of R_1 instead of two, which is a *faux pax* in terminal strip etiquette. Would the circuit have worked this way? Certainly! It's just that more than two wires secured at a single terminal makes for a "messy" connection: one that is aesthetically unpleasing and may place undue stress on the screw terminal.

Another variation would be to reverse the terminal connections for resistor R_7. As shown in the last diagram, the voltage polarity across R_7 is negative on the left and positive on the right (- , +), whereas all the other resistor polarities are positive on the left and negative on the right (+ , -):

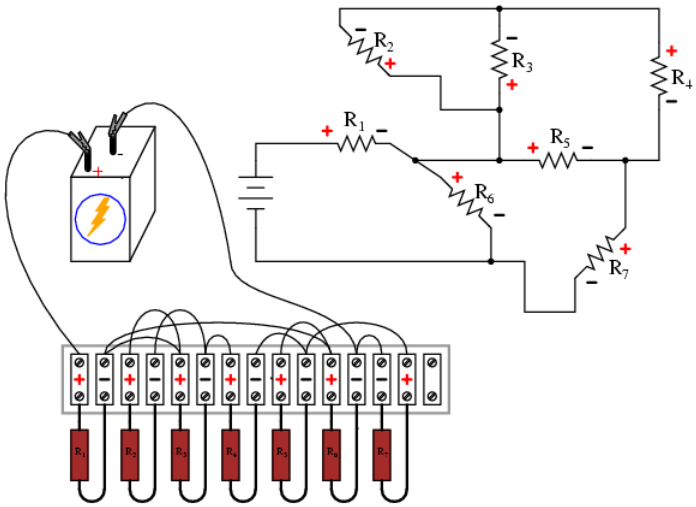

While this poses no electrical problem, it might cause confusion for anyone measuring resistor voltage drops with a voltmeter, especially an analog voltmeter which will "peg" downscale when subjected to a voltage of the wrong polarity. For the sake of consistency, it might be wise to arrange all wire connections so that all resistor voltage drop polarities are the same, like this:

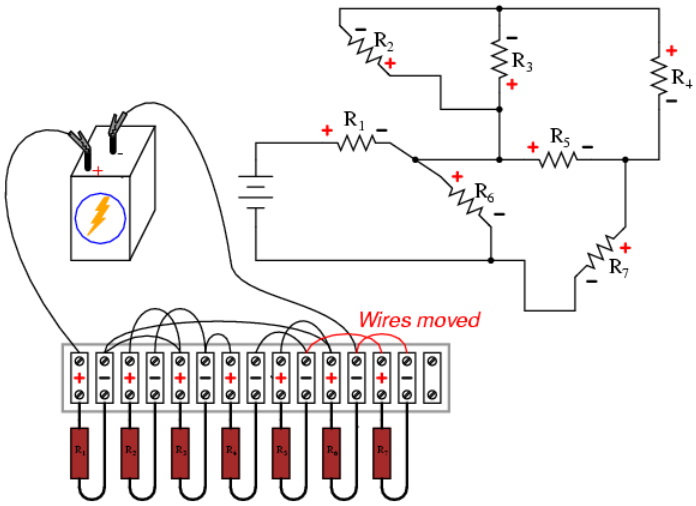

Though electrons do not care about such consistency in component layout, people do. This illustrates an important aspect of any engineering endeavor: the human factor. Whenever a design may be modified for easier comprehension and/or easier maintenance—with no sacrifice of functional performance—it should be done so.

Review

- Circuits built on terminal strips can be difficult to lay out, but when built they are robust enough to be considered permanent, yet easy to modify.
- It is bad practice to secure more than two wire ends and/or component leads under a single terminal screw or clip on a terminal strip. Try to arrange connecting wires so as to avoid this condition.
- Whenever possible, build your circuits with clarity and ease of understanding in mind. Even though component and wiring layout is usually of little consequence in DC circuit function, it matters significantly for the sake of the person who has to modify or troubleshoot it later.

This page titled 7.5: Building Series-Parallel Resistor Circuits is shared under a GNU Free Documentation License 1.3 license and was authored, remixed, and/or curated by Tony R. Kuphaldt (All About Circuits) via source content that was edited to the style and standards of the LibreTexts platform.

CHAPTER OVERVIEW

8: DC Metering Circuits

Topic hierarchy

8.1: What is a Meter?
8.2: Voltmeter Design
8.3: Voltmeter Impact on Measured Circuit
8.4: Ammeter Design
8.5: Ammeter Impact on Measured Circuit
8.6: Ohmmeter Design
8.7: High Voltage Ohmmeters
8.8: Multimeters
8.9: Kelvin (4-wire) Resistance Measurement
8.10: Bridge Circuits
8.11: Wattmeter Design
8.12: Creating Custom Calibration Resistances

This page titled 8: DC Metering Circuits is shared under a GNU Free Documentation License 1.3 license and was authored, remixed, and/or curated by Tony R. Kuphaldt (All About Circuits) via source content that was edited to the style and standards of the LibreTexts platform.

8.1: What is a Meter?

A *meter* is any device built to accurately detect and display an electrical quantity in a form readable by a human being. Usually this "readable form" is visual: motion of a pointer on a scale, a series of lights arranged to form a "bargraph," or some sort of display composed of numerical figures. In the analysis and testing of circuits, there are meters designed to accurately measure the basic quantities of voltage, current, and resistance. There are many other types of meters as well, but this chapter primarily covers the design and operation of the basic three.

Most modern meters are "digital" in design, meaning that their readable display is in the form of numerical digits. Older designs of meters are mechanical in nature, using some kind of pointer device to show quantity of measurement. In either case, the principles applied in adapting a display unit to the measurement of (relatively) large quantities of voltage, current, or resistance are the same.

The display mechanism of a meter is often referred to as a *movement*, borrowing from its mechanical nature to *move* a pointer along a scale so that a measured value may be read. Though modern digital meters have no moving parts, the term "movement" may be applied to the same basic device performing the display function.

The design of digital "movements" is beyond the scope of this chapter, but mechanical meter movement designs are very understandable. Most mechanical movements are based on the principle of electromagnetism: that electric current through a conductor produces a magnetic field perpendicular to the axis of electron flow. The greater the electric current, the stronger the magnetic field produced. If the magnetic field formed by the conductor is allowed to interact with another magnetic field, a physical force will be generated between the two sources of fields. If one of these sources is free to move with respect to the other, it will do so as current is conducted through the wire, the motion (usually against the resistance of a spring) being proportional to strength of current.

The first meter movements built were known as *galvanometers*, and were usually designed with maximum sensitivity in mind. A very simple galvanometer may be made from a magnetized needle (such as the needle from a magnetic compass) suspended from a string, and positioned within a coil of wire. Current through the wire coil will produce a magnetic field which will deflect the needle from pointing in the direction of earth's magnetic field. An antique string galvanometer is shown in the following photograph:

Such instruments were useful in their time, but have little place in the modern world except as proof-of-concept and elementary experimental devices. They are highly susceptible to motion of any kind, and to any disturbances in the natural magnetic field of the earth. Now, the term "galvanometer" usually refers to any design of electromagnetic meter movement built for exceptional sensitivity, and not necessarily a crude device such as that shown in the photograph. Practical electromagnetic meter movements can be made now where a pivoting wire coil is suspended in a strong magnetic field, shielded from the majority of outside influences. Such an instrument design is generally known as a *permanent-magnet*, *moving coil*, or *PMMC*movement:

Permanent magnet, moving coil (PMMC) meter movement

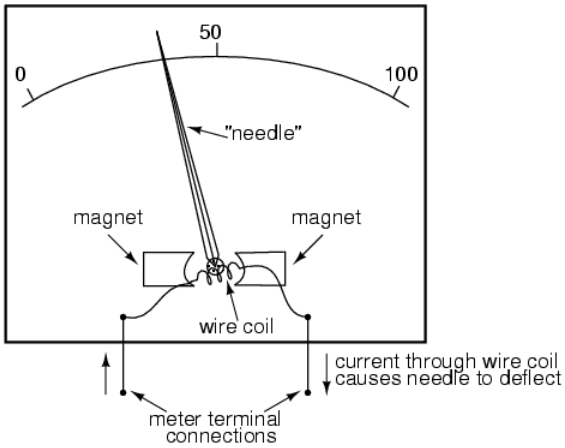

In the picture above, the meter movement "needle" is shown pointing somewhere around 35 percent of full-scale, zero being full to the left of the arc and full-scale being completely to the right of the arc. An increase in measured current will drive the needle to point further to the right and a decrease will cause the needle to drop back down toward its resting point on the left. The arc on the meter display is labeled with numbers to indicate the value of the quantity being measured, whatever that quantity is. In other words, if it takes 50 microamps of current to drive the needle fully to the right (making this a "50 µA full-scale movement"), the scale would have 0 µA written at the very left end and 50 µA at the very right, 25 µA being marked in the middle of the scale. In all likelihood, the scale would be divided into much smaller graduating marks, probably every 5 or 1 µA, to allow whoever is viewing the movement to infer a more precise reading from the needle's position.

The meter movement will have a pair of metal connection terminals on the back for current to enter and exit. Most meter movements are polarity-sensitive, one direction of current driving the needle to the right and the other driving it to the left. Some meter movements have a needle that is spring-centered in the middle of the scale sweep instead of to the left, thus enabling measurements of either polarity:

A "zero-center" meter movement

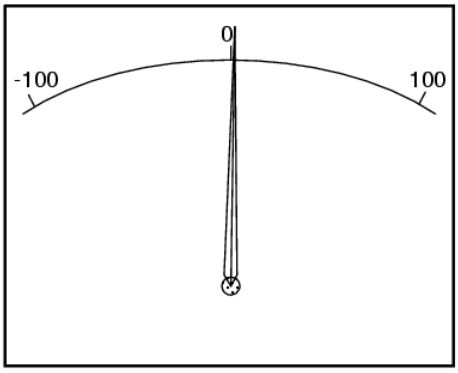

Common polarity-sensitive movements include the D'Arsonval and Weston designs, both PMMC-type instruments. Current in one direction through the wire will produce a clockwise torque on the needle mechanism, while current the other direction will produce a counter-clockwise torque.

Some meter movements are polarity-*in*sensitive, relying on the attraction of an unmagnetized, movable iron vane toward a stationary, current-carrying wire to deflect the needle. Such meters are ideally suited for the measurement of alternating current (AC). A polarity-sensitive movement would just vibrate back and forth uselessly if connected to a source of AC.

While most mechanical meter movements are based on electromagnetism (electron flow through a conductor creating a perpendicular magnetic field), a few are based on electrostatics: that is, the attractive or repulsive force generated by electric charges across space. This is the same phenomenon exhibited by certain materials (such as wax and wool) when rubbed together. If a voltage is applied between two conductive surfaces across an air gap, there will be a physical force attracting the two surfaces

together capable of moving some kind of indicating mechanism. That physical force is directly proportional to the voltage applied between the plates, and inversely proportional to the square of the distance between the plates. The force is also irrespective of polarity, making this a polarity-insensitive type of meter movement:

Electrostatic meter movement

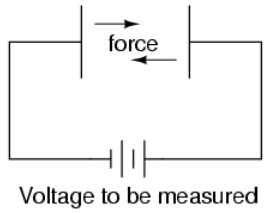

Unfortunately, the force generated by the electrostatic attraction is *very* small for common voltages. In fact, it is so small that such meter movement designs are impractical for use in general test instruments. Typically, electrostatic meter movements are used for measuring very high voltages (many thousands of volts). One great advantage of the electrostatic meter movement, however, is the fact that it has extremely high resistance, whereas electromagnetic movements (which depend on the flow of electrons through wire to generate a magnetic field) are much lower in resistance. As we will see in greater detail to come, greater resistance (resulting in less current drawn from the circuit under test) makes for a better voltmeter.

A much more common application of electrostatic voltage measurement is seen in a device known as a *Cathode Ray Tube*, or *CRT*. These are special glass tubes, very similar to television viewscreen tubes. In the cathode ray tube, a beam of electrons traveling in a vacuum are deflected from their course by voltage between pairs of metal plates on either side of the beam. Because electrons are negatively charged, they tend to be repelled by the negative plate and attracted to the positive plate. A reversal of voltage polarity across the two plates will result in a deflection of the electron beam in the opposite direction, making this type of meter "movement" polarity-sensitive:

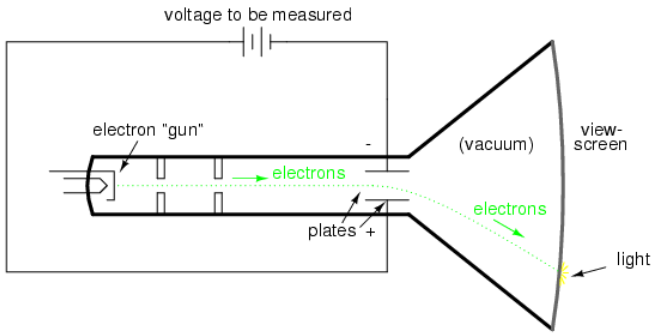

The electrons, having much less mass than metal plates, are moved by this electrostatic force very quickly and readily. Their deflected path can be traced as the electrons impinge on the glass end of the tube where they strike a coating of phosphorus chemical, emitting a glow of light seen outside of the tube. The greater the voltage between the deflection plates, the further the electron beam will be "bent" from its straight path, and the further the glowing spot will be seen from center on the end of the tube.

A photograph of a CRT is shown here:

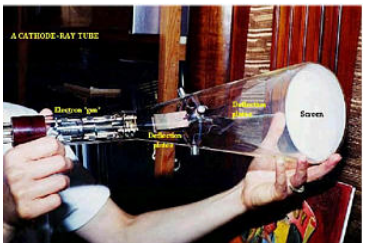

In a real CRT, as shown in the above photograph, there are two pairs of deflection plates rather than just one. In order to be able to sweep the electron beam around the whole area of the screen rather than just in a straight line, the beam must be deflected in more

than one dimension.

Although these tubes are able to accurately register small voltages, they are bulky and require electrical power to operate (unlike electromagnetic meter movements, which are more compact and actuated by the power of the measured signal current going through them). They are also much more fragile than other types of electrical metering devices. Usually, cathode ray tubes are used in conjunction with precise external circuits to form a larger piece of test equipment known as an *oscilloscope*, which has the ability to display a graph of voltage over time, a tremendously useful tool for certain types of circuits where voltage and/or current levels are dynamically changing.

Whatever the type of meter or size of meter movement, there will be a rated value of voltage or current necessary to give full-scale indication. In electromagnetic movements, this will be the "full-scale deflection current" necessary to rotate the needle so that it points to the exact end of the indicating scale. In electrostatic movements, the full-scale rating will be expressed as the value of voltage resulting in the maximum deflection of the needle actuated by the plates, or the value of voltage in a cathode-ray tube which deflects the electron beam to the edge of the indicating screen. In digital "movements," it is the amount of voltage resulting in a "full-count" indication on the numerical display: when the digits cannot display a larger quantity.

The task of the meter designer is to take a given meter movement and design the necessary external circuitry for full-scale indication at some specified amount of voltage or current. Most meter movements (electrostatic movements excepted) are quite sensitive, giving full-scale indication at only a small fraction of a volt or an amp. This is impractical for most tasks of voltage and current measurement. What the technician often requires is a meter capable of measuring high voltages and currents.

By making the sensitive meter movement part of a voltage or current divider circuit, the movement's useful measurement range may be extended to measure far greater levels than what could be indicated by the movement alone. Precision resistors are used to create the divider circuits necessary to divide voltage or current appropriately. One of the lessons you will learn in this chapter is how to design these divider circuits.

Review

- A "*movement*" is the display mechanism of a meter.
- Electromagnetic movements work on the principle of a magnetic field being generated by electric current through a wire. Examples of electromagnetic meter movements include the D'Arsonval, Weston, and iron-vane designs.
- Electrostatic movements work on the principle of physical force generated by an electric field between two plates.
- *Cathode Ray Tubes* (CRT's) use an electrostatic field to bend the path of an electron beam, providing indication of the beam's position by light created when the beam strikes the end of the glass tube.

This page titled 8.1: What is a Meter? is shared under a GNU Free Documentation License 1.3 license and was authored, remixed, and/or curated by Tony R. Kuphaldt (All About Circuits) via source content that was edited to the style and standards of the LibreTexts platform.

8.2: Voltmeter Design

As was stated earlier, most meter movements are sensitive devices. Some D'Arsonval movements have full-scale deflection current ratings as little as 50 µA, with an (internal) wire resistance of less than 1000 Ω. This makes for a voltmeter with a full-scale rating of only 50 millivolts (50 µA X 1000 Ω)! In order to build voltmeters with practical (higher voltage) scales from such sensitive movements, we need to find some way to reduce the measured quantity of voltage down to a level the movement can handle.

Let's start our example problems with a D'Arsonval meter movement having a full-scale deflection rating of 1 mA and a coil resistance of 500 Ω:

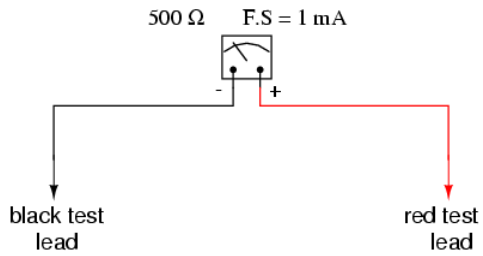

Using Ohm's Law (E=IR), we can determine how much voltage will drive this meter movement directly to full scale:

E = I R

E = (1 mA)(500 Ω)

E = 0.5 volts

If all we wanted was a meter that could measure 1/2 of a volt, the bare meter movement we have here would suffice. But to measure greater levels of voltage, something more is needed. To get an effective voltmeter meter range in excess of 1/2 volt, we'll need to design a circuit allowing only a precise proportion of measured voltage to drop across the meter movement. This will extend the meter movement's range to higher voltages. Correspondingly, we will need to re-label the scale on the meter face to indicate its new measurement range with this proportioning circuit connected.

But how do we create the necessary proportioning circuit? Well, if our intention is to allow this meter movement to measure a greater *voltage* than it does now, what we need is a *voltage divider* circuit to proportion the total measured voltage into a lesser fraction across the meter movement's connection points. Knowing that voltage divider circuits are built from *series* resistances, we'll connect a resistor in series with the meter movement (using the movement's own internal resistance as the second resistance in the divider):

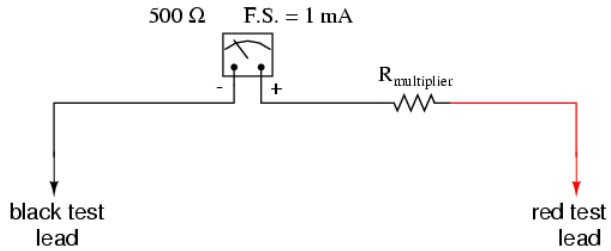

The series resistor is called a "multiplier" resistor because it *multiplies* the working range of the meter movement as it proportionately divides the measured voltage across it. Determining the required multiplier resistance value is an easy task if you're familiar with series circuit analysis.

For example, let's determine the necessary multiplier value to make this 1 mA, 500 Ω movement read exactly full-scale at an applied voltage of 10 volts. To do this, we first need to set up an E/I/R table for the two series components:

	Movement	$R_{multiplier}$	Total	
E				Volts
I				Amps
R				Ohms

Knowing that the movement will be at full-scale with 1 mA of current going through it, and that we want this to happen at an applied (total series circuit) voltage of 10 volts, we can fill in the table as such:

	Movement	$R_{multiplier}$	Total	
E			10	Volts
I	1m	1m	1m	Amps
R	500			Ohms

There are a couple of ways to determine the resistance value of the multiplier. One way is to determine total circuit resistance using Ohm's Law in the "total" column (R=E/I), then subtract the 500 Ω of the movement to arrive at the value for the multiplier:

	Movement	$R_{multiplier}$	Total	
E			10	Volts
I	1m	1m	1m	Amps
R	500	**9.5k**	**10k**	Ohms

Another way to figure the same value of resistance would be to determine voltage drop across the movement at full-scale deflection (E=IR), then subtract that voltage drop from the total to arrive at the voltage across the multiplier resistor. Finally, Ohm's Law could be used again to determine resistance (R=E/I) for the multiplier:

	Movement	$R_{multiplier}$	Total	
E	**0.5**	**9.5**	10	Volts
I	1m	1m	1m	Amps
R	500	9.5k	10k	Ohms

Either way provides the same answer (9.5 kΩ), and one method could be used as verification for the other, to check accuracy of work.

Meter movement ranged for 10 volts full-scale

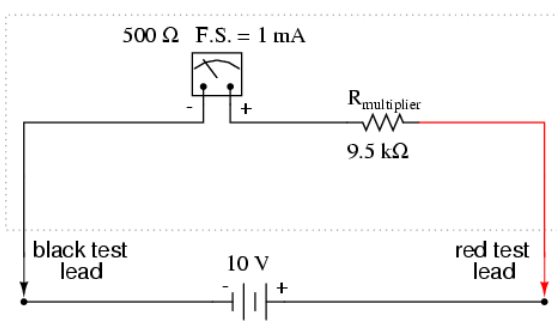

10 volts gives full-scale deflection of needle

With exactly 10 volts applied between the meter test leads (from some battery or precision power supply), there will be exactly 1 mA of current through the meter movement, as restricted by the "multiplier" resistor and the movement's own internal resistance. Exactly 1/2 volt will be dropped across the resistance of the movement's wire coil, and the needle will be pointing precisely at full-scale. Having re-labeled the scale to read from 0 to 10 V (instead of 0 to 1 mA), anyone viewing the scale will interpret its indication as ten volts. Please take note that the meter user does not have to be aware at all that the movement itself is actually measuring just a fraction of that ten volts from the external source. All that matters to the user is that the circuit as a whole functions to accurately display the total, applied voltage.

This is how practical electrical meters are designed and used: a sensitive meter movement is built to operate with as little voltage and current as possible for maximum sensitivity, then it is “fooled” by some sort of divider circuit built of precision resistors so that it indicates full-scale when a much larger voltage or current is impressed on the circuit as a whole. We have examined the design of a simple voltmeter here. Ammeters follow the same general rule, except that parallel-connected “shunt” resistors are used to create a *current divider* circuit as opposed to the series-connected *voltage divider* “multiplier” resistors used for voltmeter designs.

Generally, it is useful to have multiple ranges established for an electromechanical meter such as this, allowing it to read a broad range of voltages with a single movement mechanism. This is accomplished through the use of a multi-pole switch and several multiplier resistors, each one sized for a particular voltage range:

A multi-range voltmeter

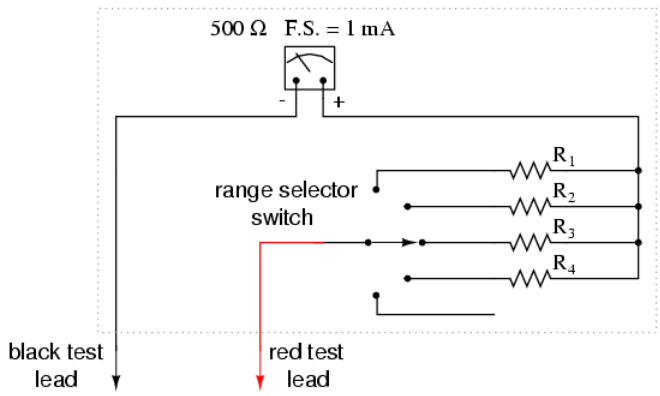

The five-position switch makes contact with only one resistor at a time. In the bottom (full clockwise) position, it makes contact with no resistor at all, providing an “off” setting. Each resistor is sized to provide a particular full-scale range for the voltmeter, all based on the particular rating of the meter movement (1 mA, 500 Ω). The end result is a voltmeter with four different full-scale ranges of measurement. Of course, in order to make this work sensibly, the meter movement’s scale must be equipped with labels appropriate for each range.

With such a meter design, each resistor value is determined by the same technique, using a known total voltage, movement full-scale deflection rating, and movement resistance. For a voltmeter with ranges of 1 volt, 10 volts, 100 volts, and 1000 volts, the multiplier resistances would be as follows:

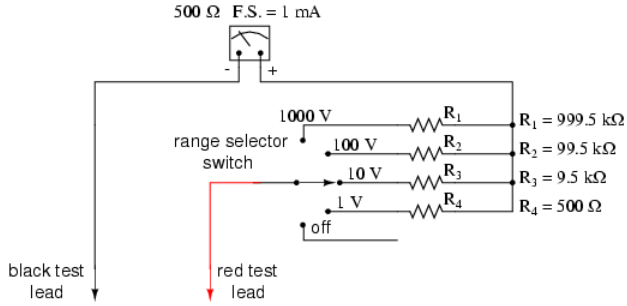

Note the multiplier resistor values used for these ranges, and how odd they are. It is highly unlikely that a 999.5 kΩ precision resistor will ever be found in a parts bin, so voltmeter designers often opt for a variation of the above design which uses more common resistor values:

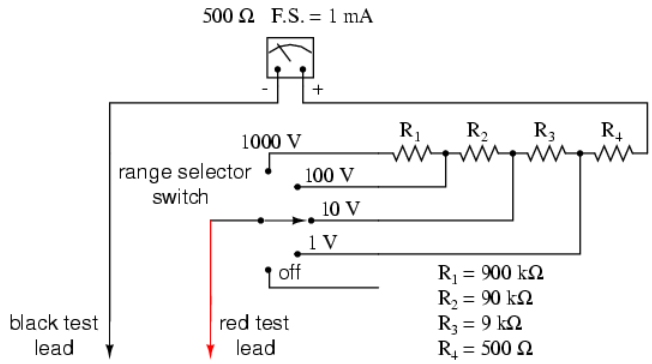

With each successively higher voltage range, more multiplier resistors are pressed into service by the selector switch, making their series resistances add for the necessary total. For example, with the range selector switch set to the 1000 volt position, we need a total multiplier resistance value of 999.5 kΩ. With this meter design, that's exactly what we'll get:

$R_{Total} = R_4 + R_3 + R_2 + R_1$

$R_{Total} = 900\ k\Omega + 90\ k\Omega + 9\ k\Omega + 500\ \Omega$

$R_{Total} = 999.5\ k\Omega$

The advantage, of course, is that the individual multiplier resistor values are more common (900k, 90k, 9k) than some of the odd values in the first design (999.5k, 99.5k, 9.5k). From the perspective of the meter user, however, there will be no discernible difference in function.

Review

- Extended voltmeter ranges are created for sensitive meter movements by adding series "multiplier" resistors to the movement circuit, providing a precise voltage division ratio.

This page titled 8.2: Voltmeter Design is shared under a GNU Free Documentation License 1.3 license and was authored, remixed, and/or curated by Tony R. Kuphaldt (All About Circuits) via source content that was edited to the style and standards of the LibreTexts platform.

8.3: Voltmeter Impact on Measured Circuit

Every meter impacts the circuit it is measuring to some extent, just as any tire-pressure gauge changes the measured tire pressure slightly as some air is let out to operate the gauge. While some impact is inevitable, it can be minimized through good meter design.

Voltage Divider Circuit

Since voltmeters are always connected in parallel with the component or components under test, any current through the voltmeter will contribute to the overall current in the tested circuit, potentially affecting the voltage being measured. A perfect voltmeter has infinite resistance, so that it draws no current from the circuit under test. However, perfect voltmeters only exist in the pages of textbooks, not in real life! Take the following voltage divider circuit as an extreme example of how a realistic voltmeter might impact the circuit its measuring:

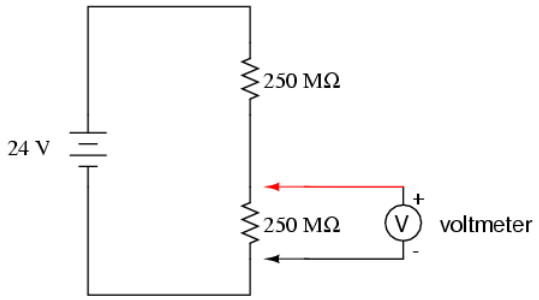

With no voltmeter connected to the circuit, there should be exactly 12 volts across each 250 MΩ resistor in the series circuit, the two equal-value resistors dividing the total voltage (24 volts) exactly in half. However, if the voltmeter in question has a lead-to-lead resistance of 10 MΩ (a common amount for a modern digital voltmeter), its resistance will create a parallel subcircuit with the lower resistor of the divider when connected:

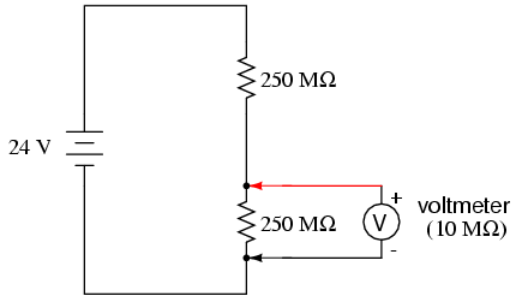

This effectively reduces the lower resistance from 250 MΩ to 9.615 MΩ (250 MΩ and 10 MΩ in parallel), drastically altering voltage drops in the circuit. The lower resistor will now have far less voltage across it than before, and the upper resistor far more.

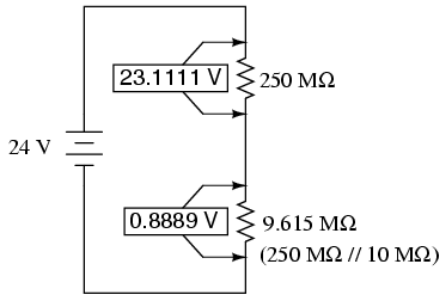

Measured Voltage Divider

A voltage divider with resistance values of 250 MΩ and 9.615 MΩ will divide 24 volts into portions of 23.1111 volts and 0.8889 volts, respectively. Since the voltmeter is part of that 9.615 MΩ resistance, that is what it will indicate: 0.8889 volts.

Now, the voltmeter can only indicate the voltage its connected across. It has no way of "knowing" there was a potential of 12 volts dropped across the lower 250 MΩ resistor *before* it was connected across it. The very act of connecting the voltmeter to the circuit makes it part of the circuit, and the voltmeter's own resistance alters the resistance ratio of the voltage divider circuit, consequently affecting the voltage being measured.

Imagine using a tire pressure gauge that took so great a volume of air to operate that it would deflate any tire it was connected to. The amount of air consumed by the pressure gauge in the act of measurement is analogous to the current taken by the voltmeter movement to move the needle. The less air a pressure gauge requires to operate, the less it will deflate the tire under test. The less current drawn by a voltmeter to actuate the needle, the less it will burden the circuit under test.

This effect is called *loading*, and it is present to some degree in every instance of voltmeter usage. The scenario shown here is worst-case, with a voltmeter resistance substantially lower than the resistances of the divider resistors. But there always will be some degree of loading, causing the meter to indicate less than the true voltage with no meter connected. Obviously, the higher the voltmeter resistance, the less loading of the circuit under test, and that is why an ideal voltmeter has infinite internal resistance.

Voltmeters with electromechanical movements are typically given ratings in "ohms per volt" of range to designate the amount of circuit impact created by the current draw of the movement. Because such meters rely on different values of multiplier resistors to give different measurement ranges, their lead-to-lead resistances will change depending on what range they're set to. Digital voltmeters, on the other hand, often exhibit a constant resistance across their test leads regardless of range setting (but not always!), and as such are usually rated simply in ohms of input resistance, rather than "ohms per volt" sensitivity.

What "ohms per volt" means is how many ohms of lead-to-lead resistance for every volt of *range setting* on the selector switch. Let's take our example voltmeter from the last section as an example:

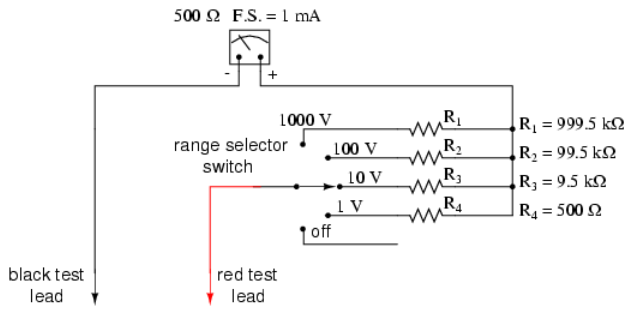

On the 1000 volt scale, the total resistance is 1 MΩ (999.5 kΩ + 500Ω), giving 1,000,000 Ω per 1000 volts of range, or 1000 ohms per volt (1 kΩ/V). This ohms-per-volt "sensitivity" rating remains constant for any range of this meter:

$$\textit{100 volt range} \quad \frac{100\ \text{k}\Omega}{100\ \text{V}} = 1000\ \Omega/\text{V sensitivity}$$

$$\textit{10 volt range} \quad \frac{10\ \text{k}\Omega}{10\ \text{V}} = 1000\ \Omega/\text{V sensitivity}$$

$$\textit{1 volt range} \quad \frac{1\ \text{k}\Omega}{1\ \text{V}} = 1000\ \Omega/\text{V sensitivity}$$

The astute observer will notice that the ohms-per-volt rating of any meter is determined by a single factor: the full-scale current of the movement, in this case 1 mA. "Ohms per volt" is the mathematical reciprocal of "volts per ohm," which is defined by Ohm's Law as current (I=E/R). Consequently, the full-scale *current* of the movement dictates the Ω/volt sensitivity of the meter, regardless of what ranges the designer equips it with through multiplier resistors. In this case, the meter movement's full-scale current rating of 1 mA gives it a voltmeter sensitivity of 1000 Ω/V regardless of how we range it with multiplier resistors.

To minimize the loading of a voltmeter on any circuit, the designer must seek to minimize the current draw of its movement. This can be accomplished by re-designing the movement itself for maximum sensitivity (less current required for full-scale deflection), but the tradeoff here is typically ruggedness: a more sensitive movement tends to be more fragile.

Another approach is to electronically boost the current sent to the movement, so that very little current needs to be drawn from the circuit under test. This special electronic circuit is known as an *amplifier*, and the voltmeter thus constructed is an *amplified voltmeter*.

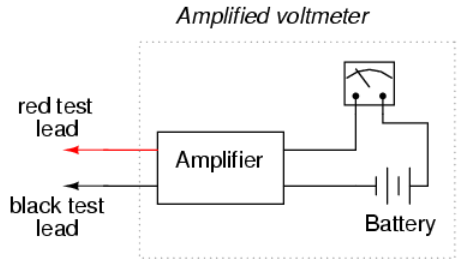

The internal workings of an amplifier are too complex to be discussed at this point, but suffice it to say that the circuit allows the measured voltage to *control* how much battery current is sent to the meter movement. Thus, the movement's current needs are supplied by a battery internal to the voltmeter and not by the circuit under test. The amplifier still loads the circuit under test to some degree, but generally hundreds or thousands of times less than the meter movement would by itself.

Before the advent of semiconductors known as "field-effect transistors," vacuum tubes were used as amplifying devices to perform this boosting. Such *vacuum-tube voltmeters*, or *(VTVM's)* were once very popular instruments for electronic test and measurement. Here is a photograph of a very old VTVM, with the vacuum tube exposed!

Now, solid-state transistor amplifier circuits accomplish the same task in digital meter designs. While this approach (of using an amplifier to boost the measured signal current) works well, it vastly complicates the design of the meter, making it nearly impossible for the beginning electronics student to comprehend its internal workings.

A final, and ingenious, solution to the problem of voltmeter loading is that of the *potentiometric* or *null-balance* instrument. It requires no advanced (electronic) circuitry or sensitive devices like transistors or vacuum tubes, but it does require greater technician involvement and skill. In a potentiometric instrument, a precision adjustable voltage source is compared against the measured voltage, and a sensitive device called a *null detector* is used to indicate when the two voltages are equal. In some circuit designs, a precision *potentiometer* is used to provide the adjustable voltage, hence the label *potentiometric*. When the voltages are equal, there will be zero current drawn from the circuit under test, and thus the measured voltage should be unaffected. It is easy to show how this works with our last example, the high-resistance voltage divider circuit:

Potentiometric voltage measurement

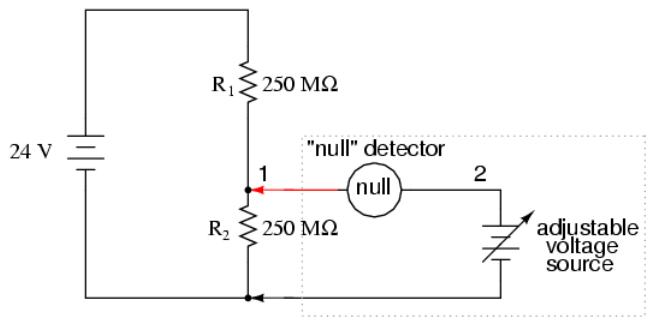

The “null detector” is a sensitive device capable of indicating the presence of very small voltages. If an electromechanical meter movement is used as the null detector, it will have a spring-centered needle that can deflect in either direction so as to be useful for indicating a voltage of either polarity. As the purpose of a null detector is to accurately indicate a condition of *zero* voltage, rather than to indicate any specific (nonzero) quantity as a normal voltmeter would, the scale of the instrument used is irrelevant. Null detectors are typically designed to be as sensitive as possible in order to more precisely indicate a “null” or “balance” (zero voltage) condition.

An extremely simple type of null detector is a set of audio headphones, the speakers within acting as a kind of meter movement. When a DC voltage is initially applied to a speaker, the resulting current through it will move the speaker cone and produce an audible “click.” Another “click” sound will be heard when the DC source is disconnected. Building on this principle, a sensitive null detector may be made from nothing more than headphones and a momentary contact switch:

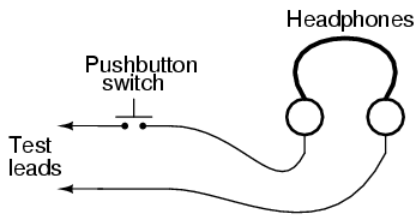

If a set of “8 ohm” headphones are used for this purpose, its sensitivity may be greatly increased by connecting it to a device called a *transformer*. The transformer exploits principles of electromagnetism to “transform” the voltage and current levels of electrical energy pulses. In this case, the type of transformer used is a *step-down* transformer, and it converts low-current pulses (created by closing and opening the pushbutton switch while connected to a small voltage source) into higher-current pulses to more efficiently drive the speaker cones inside the headphones. An “audio output” transformer with an impedance ratio of 1000:8 is ideal for this purpose. The transformer also increases detector sensitivity by accumulating the energy of a low-current signal in a magnetic field for sudden release into the headphone speakers when the switch is opened. Thus, it will produce louder “clicks” for detecting smaller signals:

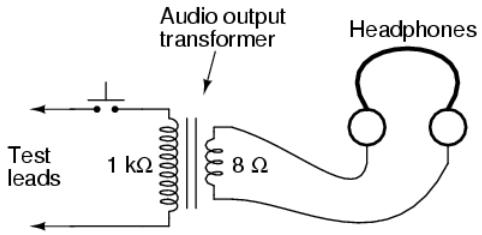

Connected to the potentiometric circuit as a null detector, the switch/transformer/headphone arrangement is used as such:

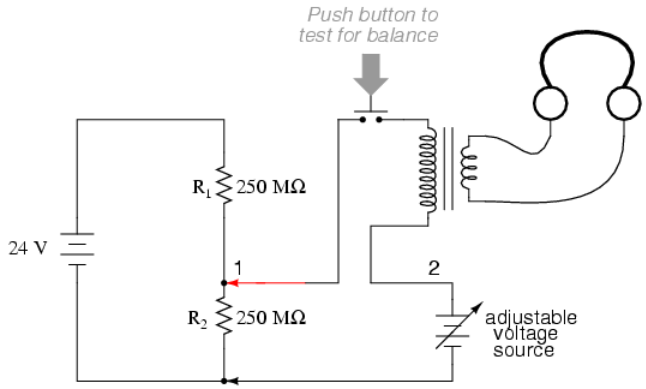

The purpose of any null detector is to act like a laboratory balance scale, indicating when the two voltages are equal (absence of voltage between points 1 and 2) and nothing more. The laboratory scale balance beam doesn't actually weigh anything; rather, it simply indicates *equality* between the unknown mass and the pile of standard (calibrated) masses.

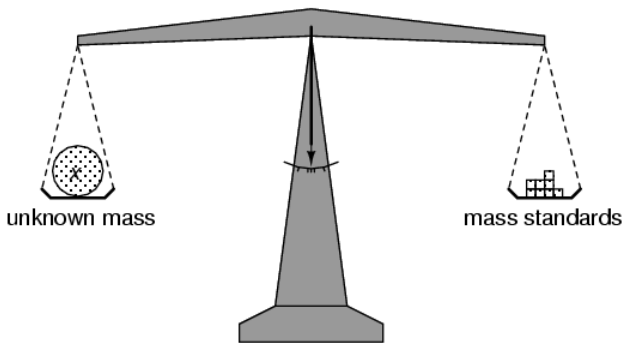

Likewise, the null detector simply indicates when the voltage between points 1 and 2 are equal, which (according to Kirchhoff's Voltage Law) will be when the adjustable voltage source (the battery symbol with a diagonal arrow going through it) is precisely equal in voltage to the drop across R_2.

To operate this instrument, the technician would manually adjust the output of the precision voltage source until the null detector indicated exactly zero (if using audio headphones as the null detector, the technician would repeatedly press and release the pushbutton switch, listening for silence to indicate that the circuit was "balanced"), and then note the source voltage as indicated by a voltmeter connected across the precision voltage source, that indication being representative of the voltage across the lower 250 MΩ resistor:

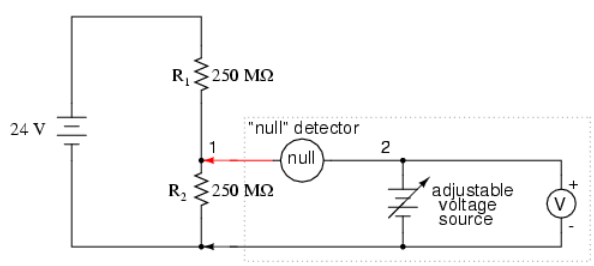

Adjust voltage source until null detector registers zero.
Then, read voltmeter indication for voltage across R_2.

The voltmeter used to directly measure the precision source need not have an extremely high Ω/V sensitivity, because the source will supply all the current it needs to operate. So long as there is zero voltage across the null detector, there will be zero current between points 1 and 2, equating to no loading of the divider circuit under test.

It is worthy to reiterate the fact that this method, properly executed, places *almost zero load* upon the measured circuit. Ideally, it places absolutely no load on the tested circuit, but to achieve this ideal goal the null detector would have to have *absolutely zero voltage across it*, which would require an infinitely sensitive null meter and a perfect balance of voltage from the adjustable voltage

source. However, despite its practical inability to achieve absolute zero loading, a potentiometric circuit is still an excellent technique for measuring voltage in high-resistance circuits. And unlike the electronic amplifier solution, which solves the problem with advanced technology, the potentiometric method achieves a hypothetically perfect solution by exploiting a fundamental law of electricity (KVL).

Review

- An ideal voltmeter has infinite resistance.
- Too low of an internal resistance in a voltmeter will adversely affect the circuit being measured.
- Vacuum tube voltmeters (VTVM's), transistor voltmeters, and potentiometric circuits are all means of minimizing the load placed on a measured circuit. Of these methods, the potentiometric ("null-balance") technique is the only one capable of placing *zero* load on the circuit.
- A *null detector* is a device built for maximum sensitivity to small voltages or currents. It is used in potentiometric voltmeter circuits to indicate the *absence* of voltage between two points, thus indicating a condition of balance between an adjustable voltage source and the voltage being measured.

This page titled 8.3: Voltmeter Impact on Measured Circuit is shared under a GNU Free Documentation License 1.3 license and was authored, remixed, and/or curated by Tony R. Kuphaldt (All About Circuits) via source content that was edited to the style and standards of the LibreTexts platform.

8.4: Ammeter Design

Ammeters Measure Electrical Current

A meter designed to measure electrical current is popularly called an “ammeter” because the unit of measurement is “amps.”

In ammeter designs, external resistors added to extend the usable range of the movement are connected in *parallel* with the movement rather than in series as is the case for voltmeters. This is because we want to divide the measured current, not the measured voltage, going to the movement and because current divider circuits are always formed by parallel resistances.

Designing an Ammeter

Taking the same meter movement as the voltmeter example, we can see that it would make a very limited instrument by itself, full-scale deflection occurring at only 1 mA.

As is the case with extending a meter movement’s voltage-measuring ability, we would have to correspondingly re-label the movement’s scale so that it read differently for an extended current range. For example, if we wanted to design an ammeter to have a full-scale range of 5 amps using the same meter movement as before (having an intrinsic full-scale range of only 1 mA), we would have to re-label the movement’s scale to read 0 A on the far left and 5 A on the far right, rather than 0 mA to 1 mA as before. Whatever extended range provided by the parallel-connected resistors, we would have to represent graphically on the meter movement face.

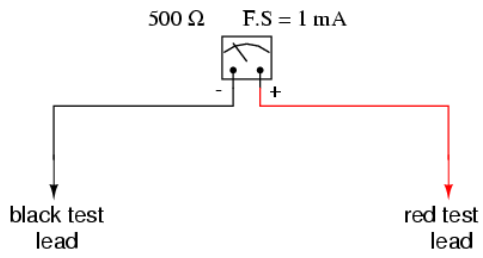

Using 5 amps as an extended range for our sample movement, let’s determine the amount of parallel resistance necessary to “shunt,” or bypass, the majority of current so that only 1 mA will go through the movement with a total current of 5 A:

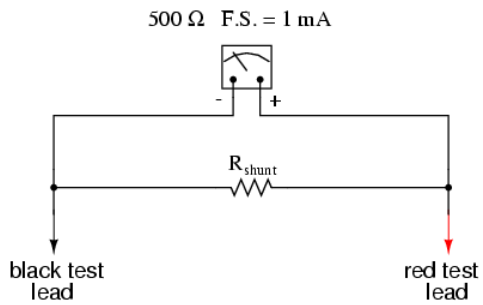

	Movement	R_{shunt}	Total	
E				Volts
I	1m		5	Amps
R	500			Ohms

From our given values of movement current, movement resistance, and total circuit (measured) current, we can determine the voltage across the meter movement (Ohm’s Law applied to the center column, E=IR):

	Movement	R_{shunt}	Total	
E	**0.5**			Volts
I	1m		5	Amps
R	500			Ohms

Knowing that the circuit formed by the movement and the shunt is of a parallel configuration, we know that the voltage across the movement, shunt, and test leads (total) must be the same:

	Movement	R_{shunt}	Total	
E	0.5	**0.5**	**0.5**	Volts
I	1m		5	Amps
R	500			Ohms

We also know that the current through the shunt must be the difference between the total current (5 amps) and the current through the movement (1 mA), because branch currents add in a parallel configuration:

	Movement	R_{shunt}	Total	
E	0.5	0.5	0.5	Volts
I	1m	**4.999**	5	Amps
R	500			Ohms

Then, using Ohm's Law (R=E/I) in the right column, we can determine the necessary shunt resistance:

	Movement	R_{shunt}	Total	
E	0.5	0.5	0.5	Volts
I	1m	4.999	5	Amps
R	500	**100.02m**		Ohms

Of course, we could have calculated the same value of just over 100 milli-ohms (100 mΩ) for the shunt by calculating total resistance (R=E/I; 0.5 volts/5 amps = 100 mΩ exactly), then working the parallel resistance formula backwards, but the arithmetic would have been more challenging:

$$R_{shunt} = \frac{1}{\frac{1}{100m} - \frac{1}{500}}$$

$$R_{shunt} = 100.02\ m\Omega$$

An Ammeter in Real-Life Designs

In real life, the shunt resistor of an ammeter will usually be encased within the protective metal housing of the meter unit, hidden from sight. Note the construction of the ammeter in the following photograph:

This particular ammeter is an automotive unit manufactured by Stewart-Warner. Although the D'Arsonval meter movement itself probably has a full-scale rating in the range of milliamps, the meter as a whole has a range of +/- 60 amps. The shunt resistor providing this high current range is enclosed within the metal housing of the meter. Note also with this particular meter that the needle centers at zero amps and can indicate either a "positive" current or a "negative" current. Connected to the battery charging

circuit of an automobile, this meter is able to indicate a charging condition (electrons flowing from generator to battery) or a discharging condition (electrons flowing from battery to the rest of the car's loads).

Increasing an Ammeter's Usable Range

As is the case with multiple-range voltmeters, ammeters can be given more than one usable range by incorporating several shunt resistors switched with a multi-pole switch:

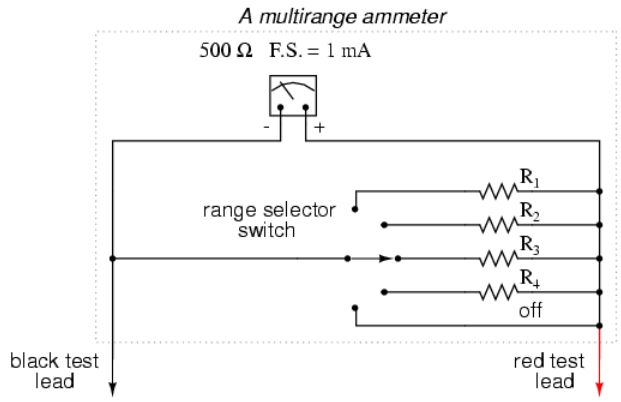

Notice that the range resistors are connected through the switch so as to be in parallel with the meter movement, rather than in series as it was in the voltmeter design. The five-position switch makes contact with only one resistor at a time, of course. Each resistor is sized accordingly for a different full-scale range, based on the particular rating of the meter movement (1 mA, 500 Ω).

With such a meter design, each resistor value is determined by the same technique, using a known total current, movement full-scale deflection rating, and movement resistance. For an ammeter with ranges of 100 mA, 1 A, 10 A, and 100 A, the shunt resistances would be as such:

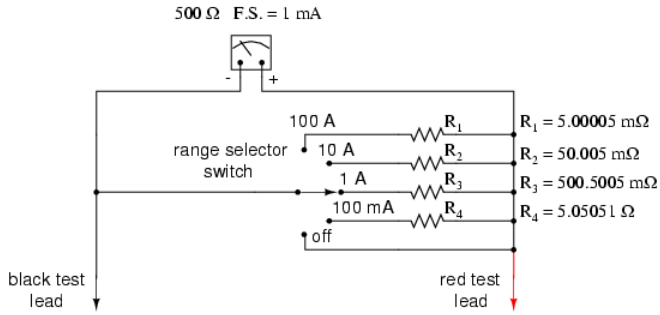

Notice that these shunt resistor values are very low! 5.00005 mΩ is 5.00005 milli-ohms, or 0.00500005 ohms! To achieve these low resistances, ammeter shunt resistors often have to be custom-made from relatively large-diameter wire or solid pieces of metal.

One thing to be aware of when sizing ammeter shunt resistors is the factor of power dissipation. Unlike the voltmeter, an ammeter's range resistors have to carry large amounts of current. If those shunt resistors are not sized accordingly, they may overheat and suffer damage, or at the very least lose accuracy due to overheating. For the example meter above, the power dissipations at full-scale indication are (the double-squiggly lines represent "approximately equal to" in mathematics):

$$P_{R1} = \frac{E^2}{R_1} = \frac{(0.5\ V)^2}{5.00005\ m\Omega} \approx 50\ W$$

$$P_{R2} = \frac{E^2}{R_2} = \frac{(0.5\ V)^2}{50.005\ m\Omega} \approx 5\ W$$

$$P_{R3} = \frac{E^2}{R_3} = \frac{(0.5\ V)^2}{500.5\ m\Omega} \approx 0.5\ W$$

$$P_{R4} = \frac{E^2}{R_4} = \frac{(0.5\ V)^2}{5.05\ \Omega} \approx 49.5\ mW$$

A 1/8 watt resistor would work just fine for R_4, a 1/2 watt resistor would suffice for R_3 and a 5 watt for R_2(although resistors tend to maintain their long-term accuracy better if not operated near their rated power dissipation, so you might want to over-rate resistors R_2 and R_3), but precision 50 watt resistors are rare and expensive components indeed. A custom resistor made from metal stock or thick wire may have to be constructed for R_1 to meet both the requirements of low resistance and high power rating.

Sometimes, shunt resistors are used in conjunction with voltmeters of high input resistance to measure current. In these cases, the current through the voltmeter movement is small enough to be considered negligible, and the shunt resistance can be sized according to how many volts or millivolts of drop will be produced per amp of current:

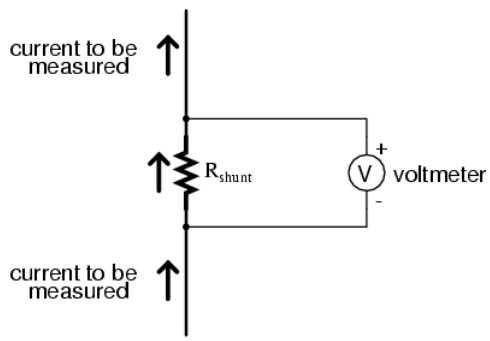

If, for example, the shunt resistor in the above circuit were sized at precisely 1 Ω, there would be 1 volt dropped across it for every amp of current through it. The voltmeter indication could then be taken as a direct indication of current through the shunt. For measuring very small currents, higher values of shunt resistance could be used to generate more voltage drop per given unit of current, thus extending the usable range of the (volt)meter down into lower amounts of current. The use of voltmeters in conjunction with low-value shunt resistances for the measurement of current is something commonly seen in industrial applications.

Using a Shunt Resistor and a Voltmeter Instead of an Ammeter

The use of a shunt resistor along with a voltmeter to measure current can be a useful trick for simplifying the task of frequent current measurements in a circuit. Normally, to measure current through a circuit with an ammeter, the circuit would have to be broken (interrupted) and the ammeter inserted between the separated wire ends, like this:

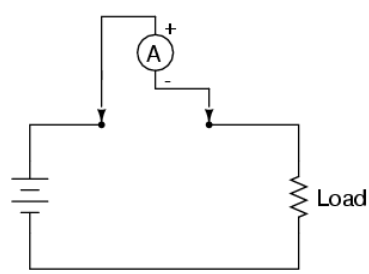

If we have a circuit where current needs to be measured often, or we would just like to make the process of current measurement more convenient, a shunt resistor could be placed between those points and left there permanently, current readings taken with a

voltmeter as needed without interrupting continuity in the circuit:

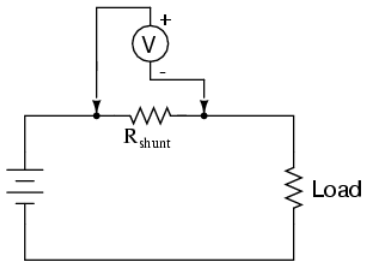

Of course, care must be taken in sizing the shunt resistor low enough so that it doesn't adversely affect the circuit's normal operation, but this is generally not difficult to do. This technique might also be useful in computer circuit analysis, where we might want to have the computer display current through a circuit in terms of a voltage (with SPICE, this would allow us to avoid the idiosyncrasy of reading negative current values):

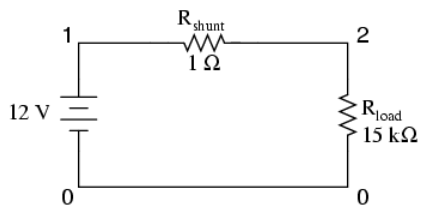


```
shunt resistor example circuit v1 1 0 rshunt 1 2 1 rload 2 0 15k .dc v1 12 12 1 .print dc v(1,2) .end v1 v
(1,2) 1.200E+01 7.999E-04
```

We would interpret the voltage reading across the shunt resistor (between circuit nodes 1 and 2 in the SPICE simulation) directly as amps, with 7.999E-04 being 0.7999 mA, or 799.9 µA. Ideally, 12 volts applied directly across 15 kΩ would give us exactly 0.8 mA, but the resistance of the shunt lessens that current just a tiny bit (as it would in real life). However, such a tiny error is generally well within acceptable limits of accuracy for either a simulation or a real circuit, and so shunt resistors can be used in all but the most demanding applications for accurate current measurement.

Review

- Ammeter ranges are created by adding parallel "shunt" resistors to the movement circuit, providing a precise current division.
- Shunt resistors may have high power dissipations, so be careful when choosing parts for such meters!
- Shunt resistors can be used in conjunction with high-resistance voltmeters as well as low-resistance ammeter movements, producing accurate voltage drops for given amounts of current. Shunt resistors should be selected for as low a resistance value as possible to minimize their impact upon the circuit under test.

This page titled 8.4: Ammeter Design is shared under a GNU Free Documentation License 1.3 license and was authored, remixed, and/or curated by Tony R. Kuphaldt (All About Circuits) via source content that was edited to the style and standards of the LibreTexts platform.

8.5: Ammeter Impact on Measured Circuit

Just like voltmeters, ammeters tend to influence the amount of current in the circuits they're connected to. However, unlike the ideal voltmeter, the ideal ammeter has zero internal resistance, so as to drop as little voltage as possible as electrons flow through it. Note that this ideal resistance value is exactly opposite as that of a voltmeter. With voltmeters, we want as little current to be drawn as possible from the circuit under test. With ammeters, we want as little voltage to be dropped as possible while conducting current.

Here is an extreme example of an ammeter's effect upon a circuit:

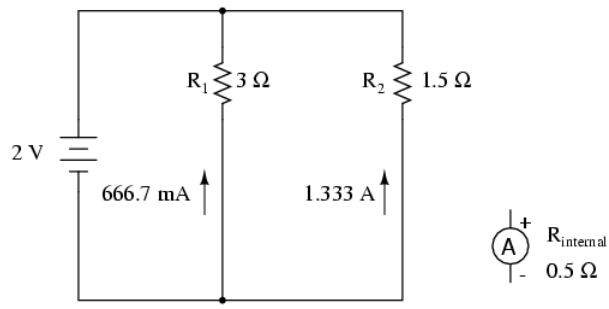

With the ammeter disconnected from this circuit, the current through the 3 Ω resistor would be 666.7 mA, and the current through the 1.5 Ω resistor would be 1.33 amps. If the ammeter had an internal resistance of 1/2 Ω, and it were inserted into one of the branches of this circuit, though, its resistance would seriously affect the measured branch current:

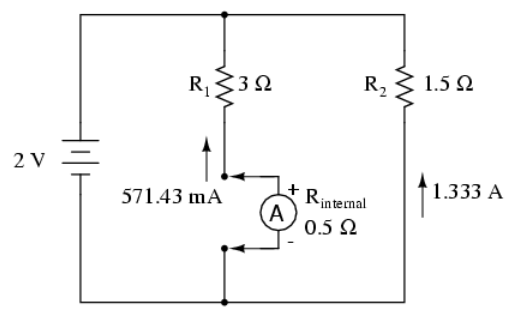

Having effectively increased the left branch resistance from 3 Ω to 3.5 Ω, the ammeter will read 571.43 mA instead of 666.7 mA. Placing the same ammeter in the right branch would affect the current to an even greater extent:

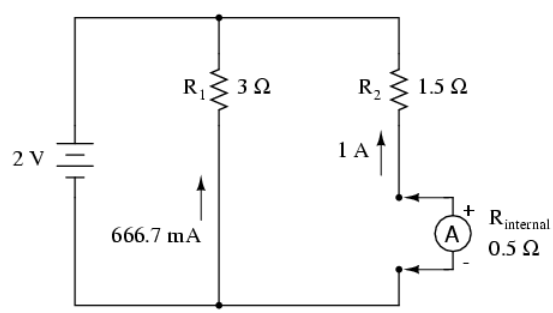

Now the right branch current is 1 amp instead of 1.333 amps, due to the increase in resistance created by the addition of the ammeter into the current path.

When using standard ammeters that connect in series with the circuit being measured, it might not be practical or possible to redesign the meter for a lower input (lead-to-lead) resistance. However, if we were selecting a value of shunt resistor to place in the circuit for a current measurement based on voltage drop, and we had our choice of a wide range of resistances, it would be best to choose the lowest practical resistance for the application. Any more resistance than necessary and the shunt may impact the circuit adversely by adding excessive resistance in the current path.

One ingenious way to reduce the impact that a current-measuring device has on a circuit is to use the circuit wire as part of the ammeter movement itself. All current-carrying wires produce a magnetic field, the strength of which is in direct proportion to the strength of the current. By building an instrument that measures the strength of that magnetic field, a no-contact ammeter can be produced. Such a meter is able to measure the current through a conductor without even having to make physical contact with the circuit, much less break continuity or insert additional resistance.

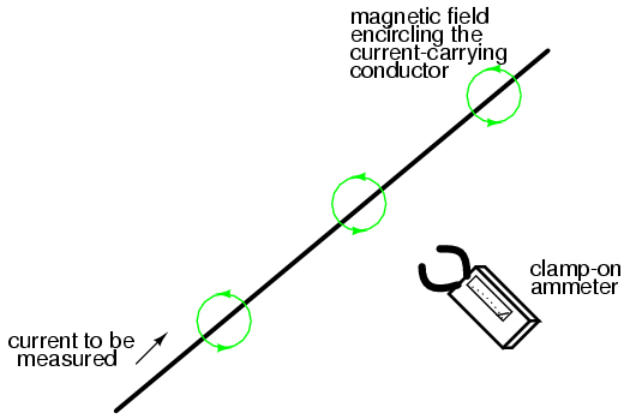

Ammeters of this design are made, and are called "*clamp-on*" meters because they have "jaws" which can be opened and then secured around a circuit wire. Clamp-on ammeters make for quick and safe current measurements, especially on high-power industrial circuits. Because the circuit under test has had no additional resistance inserted into it by a clamp-on meter, there is no error induced in taking a current measurement.

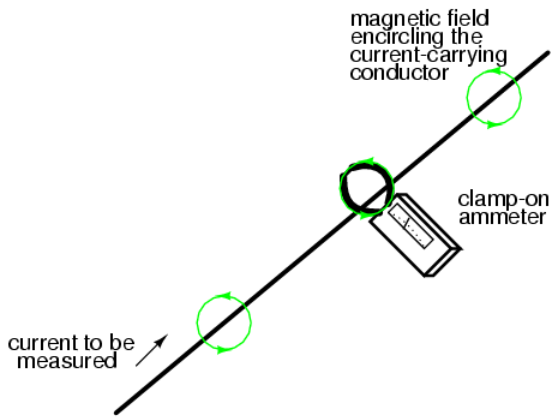

The actual movement mechanism of a clamp-on ammeter is much the same as for an iron-vane instrument, except that there is no internal wire coil to generate the magnetic field. More modern designs of clamp-on ammeters utilize a small magnetic field detector device called a *Hall-effect sensor* to accurately determine field strength. Some clamp-on meters contain electronic amplifier circuitry to generate a small voltage proportional to the current in the wire between the jaws, that small voltage connected to a voltmeter for convenient readout by a technician. Thus, a clamp-on unit can be an accessory device to a voltmeter, for current measurement.

A less accurate type of magnetic-field-sensing ammeter than the clamp-on style is shown in the following photograph:

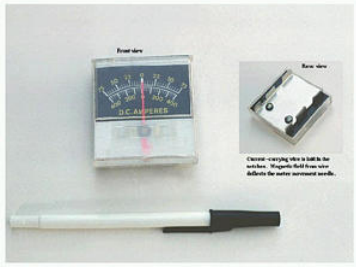

The operating principle for this ammeter is identical to the clamp-on style of meter: the circular magnetic field surrounding a current-carrying conductor deflects the meter's needle, producing an indication on the scale. Note how there are two current scales on this particular meter: +/- 75 amps and +/- 400 amps. These two measurement scales correspond to the two sets of notches on the back of the meter. Depending on which set of notches the current-carrying conductor is laid in, a given strength of magnetic field will have a different amount of effect on the needle. In effect, the two different positions of the conductor relative to the movement act as two different range resistors in a direct-connection style of ammeter.

Review

- An ideal ammeter has zero resistance.
- A "clamp-on" ammeter measures current through a wire by measuring the strength of the magnetic field around it rather than by becoming part of the circuit, making it an ideal ammeter.
- Clamp-on meters make for quick and safe current measurements, because there is no conductive contact between the meter and the circuit.

This page titled 8.5: Ammeter Impact on Measured Circuit is shared under a GNU Free Documentation License 1.3 license and was authored, remixed, and/or curated by Tony R. Kuphaldt (All About Circuits) via source content that was edited to the style and standards of the LibreTexts platform.

8.6: Ohmmeter Design

Though mechanical ohmmeter (resistance meter) designs are rarely used today, having largely been superseded by digital instruments, their operation is nonetheless intriguing and worthy of study.

The purpose of an ohmmeter, of course, is to measure the resistance placed between its leads. This resistance reading is indicated through a mechanical meter movement which operates on electric current. The ohmmeter must then have an internal source of voltage to create the necessary current to operate the movement, and also have appropriate ranging resistors to allow just the right amount of current through the movement at any given resistance.

Starting with a simple movement and battery circuit, let's see how it would function as an ohmmeter:

A simple ohmmeter

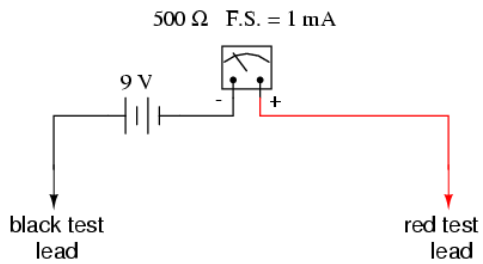

When there is infinite resistance (no continuity between test leads), there is zero current through the meter movement, and the needle points toward the far left of the scale. In this regard, the ohmmeter indication is "backwards" because maximum indication (infinity) is on the left of the scale, while voltage and current meters have zero at the left of their scales.

If the test leads of this ohmmeter are directly shorted together (measuring zero Ω), the meter movement will have a maximum amount of current through it, limited only by the battery voltage and the movement's internal resistance:

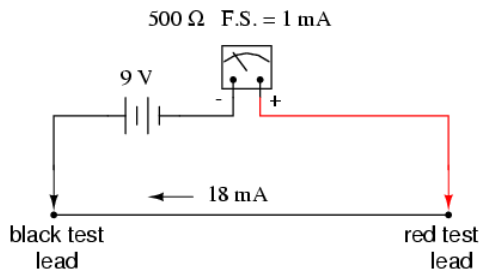

With 9 volts of battery potential and only 500 Ω of movement resistance, our circuit current will be 18 mA, which is far beyond the full-scale rating of the movement. Such an excess of current will likely damage the meter.

Not only that, but having such a condition limits the usefulness of the device. If full left-of-scale on the meter face represents an infinite amount of resistance, then full right-of-scale should represent zero. Currently, our design "pegs" the meter movement hard to the right when zero resistance is attached between the leads. We need a way to make it so that the movement just registers full-scale when the test leads are shorted together. This is accomplished by adding a series resistance to the meter's circuit:

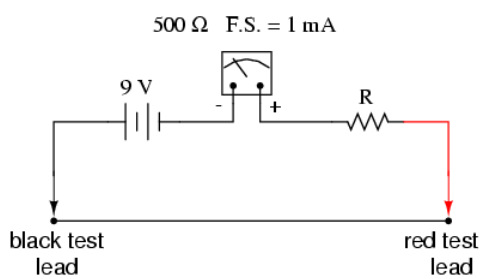

To determine the proper value for R, we calculate the total circuit resistance needed to limit current to 1 mA (full-scale deflection on the movement) with 9 volts of potential from the battery, then subtract the movement's internal resistance from that figure:

$$R_{total} = \frac{E}{I} = \frac{9\ V}{1\ mA}$$

$$R_{total} = 9\ k\Omega$$

$$R = R_{total} - 500\ \Omega = 8.5\ k\Omega$$

Now that the right value for R has been calculated, we're still left with a problem of meter range. On the left side of the scale we have "infinity" and on the right side we have zero. Besides being "backwards" from the scales of voltmeters and ammeters, this scale is strange because it goes from nothing to everything, rather than from nothing to a finite value (such as 10 volts, 1 amp, etc.). One might pause to wonder, "what does middle-of-scale represent? What figure lies exactly between zero and infinity?" Infinity is more than just a *very big* amount: it is an incalculable quantity, larger than any definite number ever could be. If half-scale indication on any other type of meter represents 1/2 of the full-scale range value, then what is half of infinity on an ohmmeter scale?

The answer to this paradox is a *nonlinear scale*. Simply put, the scale of an ohmmeter does not smoothly progress from zero to infinity as the needle sweeps from right to left. Rather, the scale starts out "expanded" at the right-hand side, with the successive resistance values growing closer and closer to each other toward the left side of the scale:

An ohmmeter's logarithmic scale

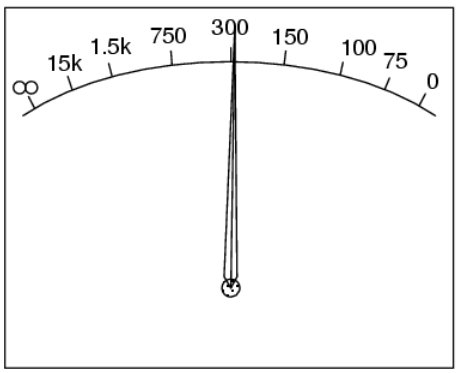

Infinity cannot be approached in a linear (even) fashion, because the scale would *never* get there! With a nonlinear scale, the amount of resistance spanned for any given distance on the scale increases as the scale progresses toward infinity, making infinity an attainable goal.

We still have a question of range for our ohmmeter, though. What value of resistance between the test leads will cause exactly 1/2 scale deflection of the needle? If we know that the movement has a full-scale rating of 1 mA, then 0.5 mA (500 µA) must be the value needed for half-scale deflection. Following our design with the 9 volt battery as a source we get:

$$R_{total} = \frac{E}{I} = \frac{9\ V}{500\ \mu A}$$

$$R_{total} = 18\ k\Omega$$

With an internal movement resistance of 500 Ω and a series range resistor of 8.5 kΩ, this leaves 9 kΩ for an external (lead-to-lead) test resistance at 1/2 scale. In other words, the test resistance giving 1/2 scale deflection in an ohmmeter is equal in value to the (internal) series total resistance of the meter circuit.

Using Ohm's Law a few more times, we can determine the test resistance value for 1/4 and 3/4 scale deflection as well:

1/4 scale deflection (0.25 mA of meter current):

$$R_{total} = \frac{E}{I} = \frac{9\ V}{250\ \mu A}$$

$$R_{total} = 36\ k\Omega$$

$$R_{test} = R_{total} - R_{internal}$$

$$R_{test} = 36\ k\Omega - 9\ k\Omega$$

$$R_{test} = 27\ k\Omega$$

3/4 scale deflection (0.75 mA of meter current):

$$R_{total} = \frac{E}{I} = \frac{9\ V}{750\ \mu A}$$

$$R_{total} = 12\ k\Omega$$

$$R_{test} = R_{total} - R_{internal}$$

$$R_{test} = 12\ k\Omega - 9\ k\Omega$$

$$R_{test} = 3\ k\Omega$$

So, the scale for this ohmmeter looks something like this:

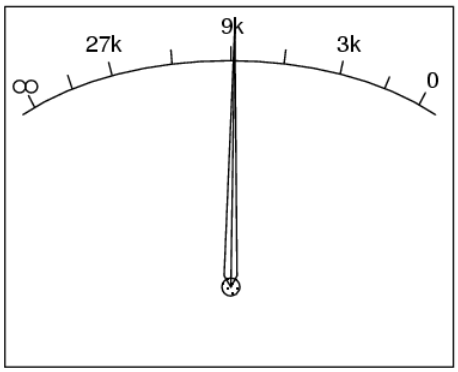

One major problem with this design is its reliance upon a stable battery voltage for accurate resistance reading. If the battery voltage decreases (as all chemical batteries do with age and use), the ohmmeter scale will lose accuracy. With the series range resistor at a constant value of 8.5 kΩ and the battery voltage decreasing, the meter will no longer deflect full-scale to the right when the test leads are shorted together (0 Ω). Likewise, a test resistance of 9 kΩ will fail to deflect the needle to exactly 1/2 scale with a lesser battery voltage.

There are design techniques used to compensate for varying battery voltage, but they do not completely take care of the problem and are to be considered approximations at best. For this reason, and for the fact of the nonlinear scale, this type of ohmmeter is never considered to be a precision instrument.

One final caveat needs to be mentioned with regard to ohmmeters: they only function correctly when measuring resistance that is not being powered by a voltage or current source. In other words, you cannot measure resistance with an ohmmeter on a “live” circuit! The reason for this is simple: the ohmmeter’s accurate indication depends on the only source of voltage being its internal battery. The presence of any voltage across the component to be measured will interfere with the ohmmeter’s operation. If the voltage is large enough, it may even damage the ohmmeter.

Review

- Ohmmeters contain internal sources of voltage to supply power in taking resistance measurements.
- An analog ohmmeter scale is “backwards” from that of a voltmeter or ammeter, the movement needle reading zero resistance at full-scale and infinite resistance at rest.

- Analog ohmmeters also have nonlinear scales, “expanded” at the low end of the scale and “compressed” at the high end to be able to span from zero to infinite resistance.
- Analog ohmmeters are not precision instruments.
- Ohmmeters should *never* be connected to an energized circuit (that is, a circuit with its own source of voltage). Any voltage applied to the test leads of an ohmmeter will invalidate its reading.

This page titled 8.6: Ohmmeter Design is shared under a GNU Free Documentation License 1.3 license and was authored, remixed, and/or curated by Tony R. Kuphaldt (All About Circuits) via source content that was edited to the style and standards of the LibreTexts platform.

8.7: High Voltage Ohmmeters

Most ohmmeters of the design shown in the previous section utilize a battery of relatively low voltage, usually nine volts or less. This is perfectly adequate for measuring resistances under several mega-ohms (MΩ), but when extremely high resistances need to be measured, a 9 volt battery is insufficient for generating enough current to actuate an electromechanical meter movement.

Also, as discussed in an earlier chapter, resistance is not always a stable (linear) quantity. This is especially true of non-metals. Recall the graph of current over voltage for a small air gap (less than an inch):

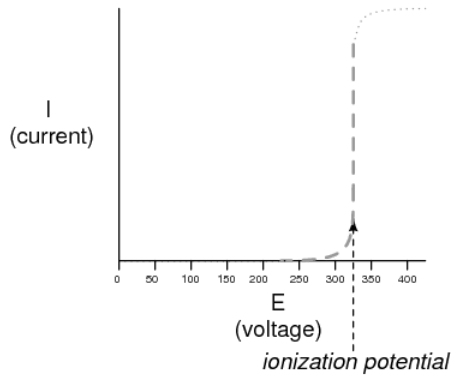

While this is an extreme example of nonlinear conduction, other substances exhibit similar insulating/conducting properties when exposed to high voltages. Obviously, an ohmmeter using a low-voltage battery as a source of power cannot measure resistance at the ionization potential of a gas, or at the breakdown voltage of an insulator. If such resistance values need to be measured, nothing but a high-voltage ohmmeter will suffice.

The most direct method of high-voltage resistance measurement involves simply substituting a higher voltage battery in the same basic design of ohmmeter investigated earlier:

Simple high-voltage ohmmeter

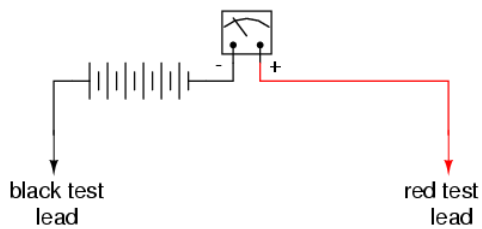

Knowing, however, that the resistance of some materials tends to change with applied voltage, it would be advantageous to be able to adjust the voltage of this ohmmeter to obtain resistance measurements under different conditions:

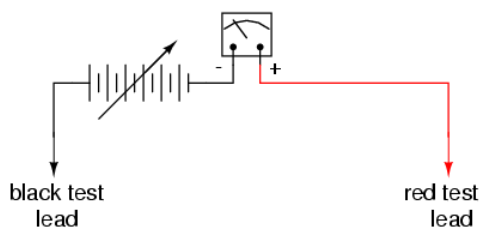

Unfortunately, this would create a calibration problem for the meter. If the meter movement deflects full-scale with a certain amount of current through it, the full-scale range of the meter in ohms would change as the source voltage changed. Imagine connecting a stable resistance across the test leads of this ohmmeter while varying the source voltage: as the voltage is increased, there will be more current through the meter movement, hence a greater amount of deflection. What we really need is a meter movement that will produce a consistent, stable deflection for any stable resistance value measured, regardless of the applied voltage.

Accomplishing this design goal requires a special meter movement, one that is peculiar to *megohmmeters*, or *meggers*, as these instruments are known.

"Megger" movement

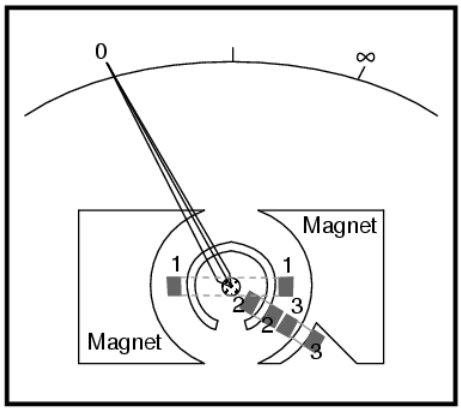

The numbered, rectangular blocks in the above illustration are cross-sectional representations of wire coils. These three coils all move with the needle mechanism. There is no spring mechanism to return the needle to a set position. When the movement is unpowered, the needle will randomly "float." The coils are electrically connected like this:

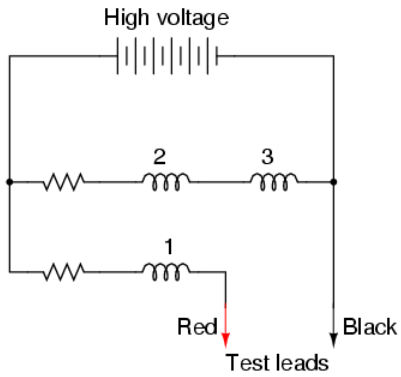

With infinite resistance between the test leads (open circuit), there will be no current through coil 1, only through coils 2 and 3. When energized, these coils try to center themselves in the gap between the two magnet poles, driving the needle fully to the right of the scale where it points to "infinity."

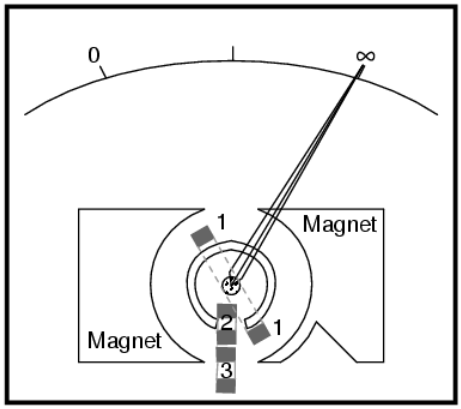

Current through coils 2 and 3; no current through coil 1

Any current through coil 1 (through a measured resistance connected between the test leads) tends to drive the needle to the left of scale, back to zero. The internal resistor values of the meter movement are calibrated so that when the test leads are shorted

together, the needle deflects exactly to the 0 Ω position.

Because any variations in battery voltage will affect the torque generated by *both* sets of coils (coils 2 and 3, which drive the needle to the right, and coil 1, which drives the needle to the left), those variations will have no effect of the calibration of the movement. In other words, the accuracy of this ohmmeter movement is unaffected by battery voltage: a given amount of measured resistance will produce a certain needle deflection, no matter how much or little battery voltage is present.

The only effect that a variation in voltage will have on meter indication is the degree to which the measured resistance changes with applied voltage. So, if we were to use a megger to measure the resistance of a gas-discharge lamp, it would read very high resistance (needle to the far right of the scale) for low voltages and low resistance (needle moves to the left of the scale) for high voltages. This is precisely what we expect from a good high-voltage ohmmeter: to provide accurate indication of subject resistance under different circumstances.

For maximum safety, most meggers are equipped with hand-crank generators for producing the high DC voltage (up to 1000 volts). If the operator of the meter receives a shock from the high voltage, the condition will be self-correcting, as he or she will naturally stop cranking the generator! Sometimes a “slip clutch” is used to stabilize generator speed under different cranking conditions, so as to provide a fairly stable voltage whether it is cranked fast or slow. Multiple voltage output levels from the generator are available by the setting of a selector switch.

A simple hand-crank megger is shown in this photograph:

Some meggers are battery-powered to provide greater precision in output voltage. For safety reasons these meggers are activated by a momentary-contact pushbutton switch, so the switch cannot be left in the “on” position and pose a significant shock hazard to the meter operator.

Real meggers are equipped with three connection terminals, labeled *Line*, *Earth*, and *Guard*. The schematic is quite similar to the simplified version shown earlier:

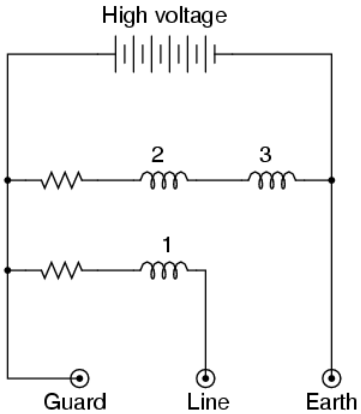

Resistance is measured between the Line and Earth terminals, where current will travel through coil 1. The "Guard" terminal is provided for special testing situations where one resistance must be isolated from another. Take for instance this scenario where the insulation resistance is to be tested in a two-wire cable:

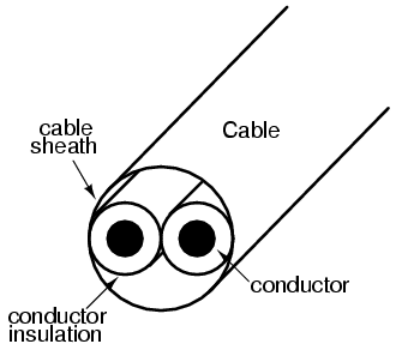

To measure insulation resistance from a conductor to the outside of the cable, we need to connect the "Line" lead of the megger to one of the conductors and connect the "Earth" lead of the megger to a wire wrapped around the sheath of the cable:

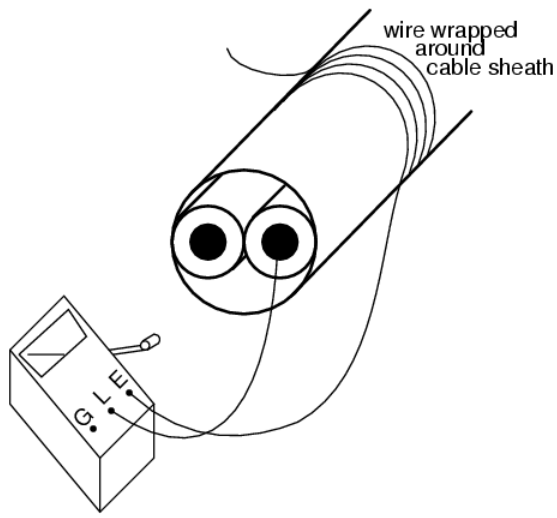

In this configuration the megger should read the resistance between one conductor and the outside sheath. Or will it? If we draw a schematic diagram showing all insulation resistances as resistor symbols, what we have looks like this:

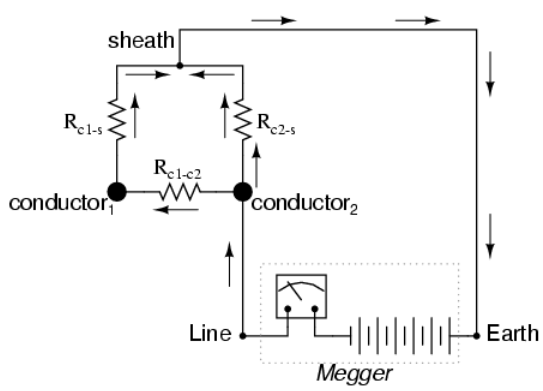

Rather than just measure the resistance of the second conductor to the sheath (R_{c2-s}), what we'll actually measure is that resistance in parallel with the series combination of conductor-to-conductor resistance (R_{c1-c2}) and the first conductor to the sheath (R_{c1-s}). If we don't care about this fact, we can proceed with the test as configured. If we desire to measure *only* the resistance between the second conductor and the sheath (R_{c2-s}), then we need to use the megger's "Guard" terminal:

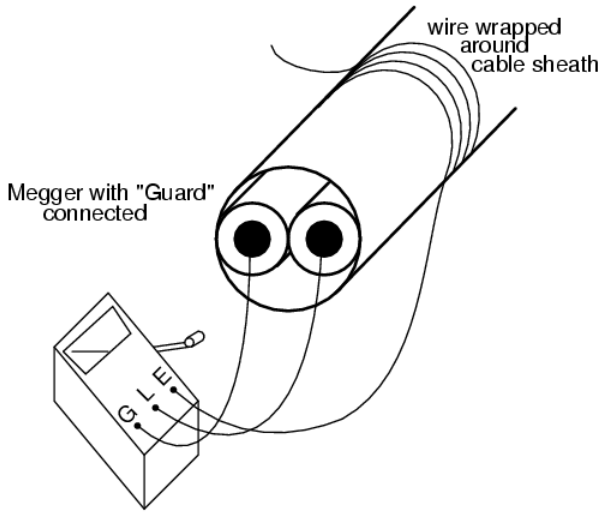

Now the circuit schematic looks like this:

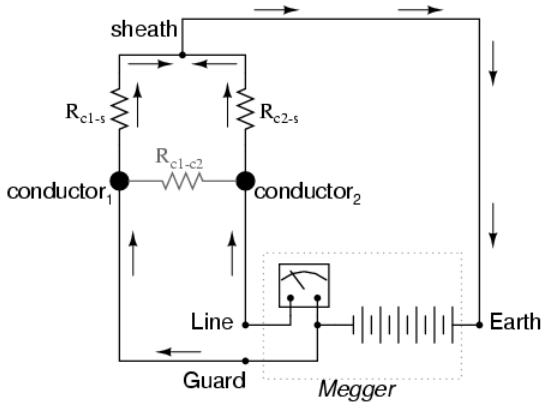

Connecting the “Guard” terminal to the first conductor places the two conductors at almost equal potential. With little or no voltage between them, the insulation resistance is nearly infinite, and thus there will be no current *between* the two conductors. Consequently, the megger’s resistance indication will be based exclusively on the current through the second conductor’s insulation, through the cable sheath, and to the wire wrapped around, not the current leaking through the first conductor’s insulation.

Meggers are field instruments: that is, they are designed to be portable and operated by a technician on the job site with as much ease as a regular ohmmeter. They are very useful for checking high-resistance “short” failures between wires caused by wet or degraded insulation. Because they utilize such high voltages, they are not as affected by stray voltages (voltages less than 1 volt produced by electrochemical reactions between conductors, or “induced” by neighboring magnetic fields) as ordinary ohmmeters.

For a more thorough test of wire insulation, another high-voltage ohmmeter commonly called a *hi-pot* tester is used. These specialized instruments produce voltages in excess of 1 kV, and may be used for testing the insulating effectiveness of oil, ceramic insulators, and even the integrity of other high-voltage instruments. Because they are capable of producing such high voltages, they must be operated with the utmost care, and only by trained personnel.

It should be noted that hi-pot testers and even meggers (in certain conditions) are capable of *damaging* wire insulation if incorrectly used. Once an insulating material has been subjected to *breakdown* by the application of an excessive voltage, its ability to electrically insulate will be compromised. Again, these instruments are to be used only by trained personnel.

This page titled 8.7: High Voltage Ohmmeters is shared under a GNU Free Documentation License 1.3 license and was authored, remixed, and/or curated by Tony R. Kuphaldt (All About Circuits) via source content that was edited to the style and standards of the LibreTexts platform.

8.8: Multimeters

Seeing as how a common meter movement can be made to function as a voltmeter, ammeter, or ohmmeter simply by connecting it to different external resistor networks, it should make sense that a multi-purpose meter ("multimeter") could be designed in one unit with the appropriate switch(es) and resistors.

For general purpose electronics work, the multimeter reigns supreme as the instrument of choice. No other device is able to do so much with so little an investment in parts and elegant simplicity of operation. As with most things in the world of electronics, the advent of solid-state components like transistors has revolutionized the way things are done, and multimeter design is no exception to this rule. However, in keeping with this chapter's emphasis on analog ("old-fashioned") meter technology, I'll show you a few pre-transistor meters.

The unit shown above is typical of a handheld analog multimeter, with ranges for voltage, current, and resistance measurement. Note the many scales on the face of the meter movement for the different ranges and functions selectable by the rotary switch. The wires for connecting this instrument to a circuit (the "test leads") are plugged into the two copper jacks (socket holes) at the bottom-center of the meter face marked "- TEST +", black and red.

This multimeter (Barnett brand) takes a slightly different design approach than the previous unit. Note how the rotary selector switch has fewer positions than the previous meter, but also how there are many more jacks into which the test leads may be plugged into. Each one of those jacks is labeled with a number indicating the respective full-scale range of the meter.

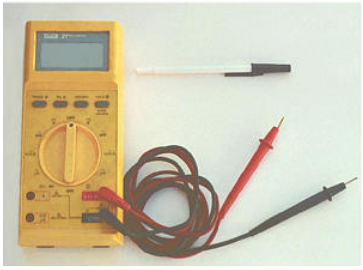

Lastly, here is a picture of a digital multimeter. Note that the familiar meter movement has been replaced by a blank, gray-colored display screen. When powered, numerical digits appear in that screen area, depicting the amount of voltage, current, or resistance being measured. This particular brand and model of digital meter has a rotary selector switch and four jacks into which test leads can be plugged. Two leads—one red and one black—are shown plugged into the meter.

A close examination of this meter will reveal one “common” jack for the black test lead and three others for the red test lead. The jack into which the red lead is shown inserted is labeled for voltage and resistance measurement, while the other two jacks are labeled for current (A, mA, and µA) measurement. This is a wise design feature of the multimeter, requiring the user to move a test lead plug from one jack to another in order to switch from the voltage measurement to the current measurement function. It would be hazardous to have the meter set in current measurement mode while connected across a significant source of voltage because of the low input resistance, and making it necessary to move a test lead plug rather than just flip the selector switch to a different position helps ensure that the meter doesn’t get set to measure current unintentionally.

Note that the selector switch still has different positions for voltage and current measurement, so in order for the user to switch between these two modes of measurement they must switch the position of the red test lead *and* move the selector switch to a different position.

Also note that neither the selector switch nor the jacks are labeled with measurement ranges. In other words, there are no “100 volt” or “10 volt” or “1 volt” ranges (or any equivalent range steps) on this meter. Rather, this meter is “autoranging,” meaning that it automatically picks the appropriate range for the quantity being measured. Autoranging is a feature only found on digital meters, but not all digital meters.

No two models of multimeters are designed to operate exactly the same, even if they’re manufactured by the same company. In order to fully understand the operation of any multimeter, the owner’s manual must be consulted.

Here is a schematic for a simple analog volt/ammeter:

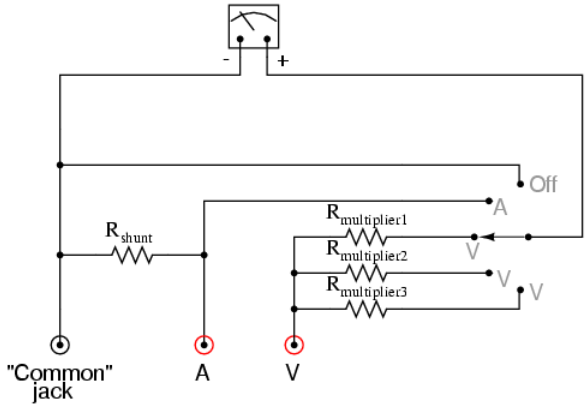

In the switch’s three lower (most counter-clockwise) positions, the meter movement is connected to the **Common** and **V** jacks through one of three different series range resistors ($R_{multiplier1}$ through $R_{multiplier3}$), and so acts as a voltmeter. In the fourth position, the meter movement is connected in parallel with the shunt resistor, and so acts as an ammeter for any current entering the **common** jack and exiting the **A** jack. In the last (furthest clockwise) position, the meter movement is disconnected from either red jack, but short-circuited through the switch. This short-circuiting creates a dampening effect on the needle, guarding against mechanical shock damage when the meter is handled and moved.

If an ohmmeter function is desired in this multimeter design, it may be substituted for one of the three voltage ranges as such:

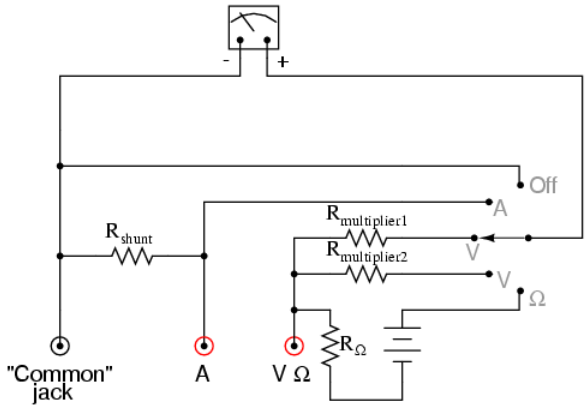

With all three fundamental functions available, this multimeter may also be known as a *volt-ohm-milliammeter*.

Obtaining a reading from an analog multimeter when there is a multitude of ranges and only one meter movement may seem daunting to the new technician. On an analog multimeter, the meter movement is marked with several scales, each one useful for at least one range setting. Here is a close-up photograph of the scale from the Barnett multimeter shown earlier in this section:

Note that there are three types of scales on this meter face: a green scale for resistance at the top, a set of black scales for DC voltage and current in the middle, and a set of blue scales for AC voltage and current at the bottom. Both the DC and AC scales have three sub-scales, one ranging 0 to 2.5, one ranging 0 to 5, and one ranging 0 to 10. The meter operator must choose whichever scale best matches the range switch and plug settings in order to properly interpret the meter's indication.

This particular multimeter has several basic voltage measurement ranges: 2.5 volts, 10 volts, 50 volts, 250 volts, 500 volts, and 1000 volts. With the use of the voltage range extender unit at the top of the multimeter, voltages up to 5000 volts can be measured. Suppose the meter operator chose to switch the meter into the "volt" function and plug the red test lead into the 10 volt jack. To interpret the needle's position, he or she would have to read the scale ending with the number "10". If they moved the red test plug into the 250 volt jack, however, they would read the meter indication on the scale ending with "2.5", multiplying the direct indication by a factor of 100 in order to find what the measured voltage was.

If current is measured with this meter, another jack is chosen for the red plug to be inserted into and the range is selected via a rotary switch. This close-up photograph shows the switch set to the 2.5 mA position:

Note how all current ranges are power-of-ten multiples of the three scale ranges shown on the meter face: 2.5, 5, and 10. In some range settings, such as the 2.5 mA for example, the meter indication may be read directly on the 0 to 2.5 scale. For other range settings (250 µA, 50 mA, 100 mA, and 500 mA), the meter indication must be read off the appropriate scale and then multiplied by either 10 or 100 to obtain the real figure. The highest current range available on this meter is obtained with the rotary switch in the 2.5/10 amp position. The distinction between 2.5 amps and 10 amps is made by the red test plug position: a special “10 amp” jack next to the regular current-measuring jack provides an alternative plug setting to select the higher range.

Resistance in ohms, of course, is read by a nonlinear scale at the top of the meter face. It is “backward,” just like all battery-operated analog ohmmeters, with zero at the right-hand side of the face and infinity at the left-hand side. There is only one jack provided on this particular multimeter for “ohms,” so different resistance-measuring ranges must be selected by the rotary switch. Notice on the switch how five different “multiplier” settings are provided for measuring resistance: Rx1, Rx10, Rx100, Rx1000, and Rx10000. Just as you might suspect, the meter indication is given by multiplying whatever needle position is shown on the meter face by the power-of-ten multiplying factor set by the rotary switch.

This page titled 8.8: Multimeters is shared under a GNU Free Documentation License 1.3 license and was authored, remixed, and/or curated by Tony R. Kuphaldt (All About Circuits) via source content that was edited to the style and standards of the LibreTexts platform.

8.9: Kelvin (4-wire) Resistance Measurement

Suppose we wished to measure the resistance of some component located a significant distance away from our ohmmeter. Such a scenario would be problematic, because an ohmmeter measures *all* resistance in the circuit loop, which includes the resistance of the wires (R_{wire}) connecting the ohmmeter to the component being measured ($R_{subject}$):

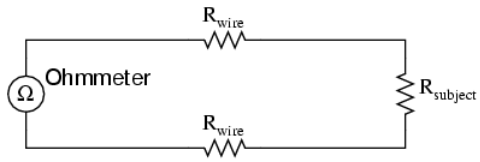

Ohmmeter indicates $R_{wire} + R_{subject} + R_{wire}$

Usually, wire resistance is very small (only a few ohms per hundreds of feet, depending primarily on the gauge (size) of the wire), but if the connecting wires are very long, and/or the component to be measured has a very low resistance anyway, the measurement error introduced by wire resistance will be substantial.

An ingenious method of measuring the subject resistance in a situation like this involves the use of both an ammeter and a voltmeter. We know from Ohm's Law that resistance is equal to voltage divided by current (R = E/I). Thus, we should be able to determine the resistance of the subject component if we measure the current going through it and the voltage dropped across it:

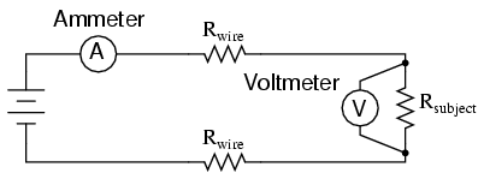

$$R_{subject} = \frac{\text{Voltmeter indication}}{\text{Ammeter indication}}$$

Current is the same at all points in the circuit, because it is a series loop. Because we're only measuring voltage dropped across the subject resistance (and not the wires' resistances), though, the calculated resistance is indicative of the subject component's resistance ($R_{subject}$) alone.

Our goal, though, was to measure this subject resistance *from a distance*, so our voltmeter must be located somewhere near the ammeter, connected across the subject resistance by another pair of wires containing resistance:

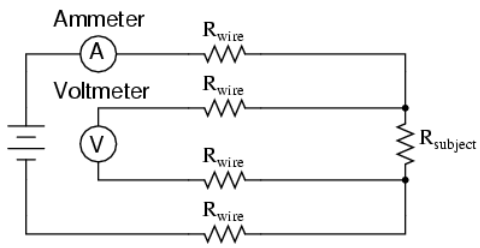

$$R_{subject} = \frac{\text{Voltmeter indication}}{\text{Ammeter indication}}$$

At first it appears that we have lost any advantage of measuring resistance this way, because the voltmeter now has to measure voltage through a long pair of (resistive) wires, introducing stray resistance back into the measuring circuit again. However, upon closer inspection it is seen that nothing is lost at all, because the voltmeter's wires carry miniscule current. Thus, those long lengths of wire connecting the voltmeter across the subject resistance will drop insignificant amounts of voltage, resulting in a voltmeter indication that is very nearly the same as if it were connected directly across the subject resistance:

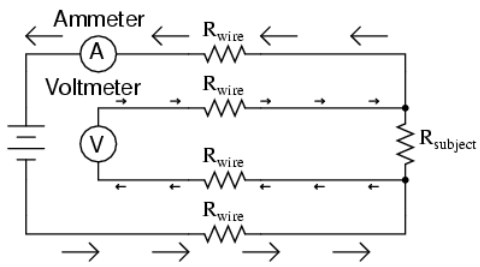

Any voltage dropped across the main current-carrying wires will not be measured by the voltmeter, and so do not factor into the resistance calculation at all. Measurement accuracy may be improved even further if the voltmeter's current is kept to a minimum, either by using a high-quality (low full-scale current) movement and/or a potentiometric (null-balance) system.

This method of measurement which avoids errors caused by wire resistance is called the *Kelvin*, or *4-wire*method. Special connecting clips called *Kelvin clips* are made to facilitate this kind of connection across a subject resistance:

Kelvin clips

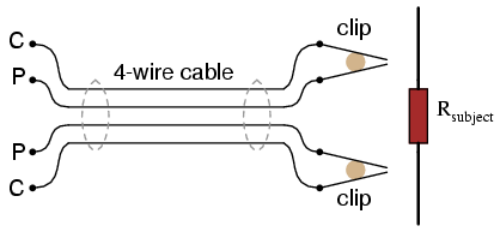

In regular, "alligator" style clips, both halves of the jaw are electrically common to each other, usually joined at the hinge point. In Kelvin clips, the jaw halves are insulated from each other at the hinge point, only contacting at the tips where they clasp the wire or terminal of the subject being measured. Thus, current through the "C" ("current") jaw halves does not go through the "P" ("potential," or *voltage*) jaw halves, and will not create any error-inducing voltage drop along their length:

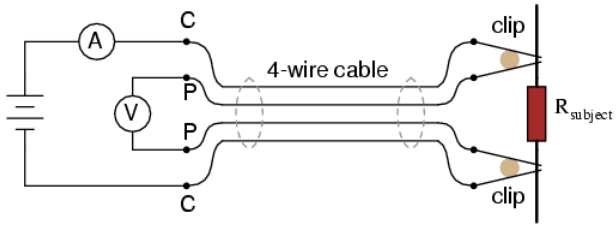

$$R_{subject} = \frac{\text{Voltmeter indication}}{\text{Ammeter indication}}$$

The same principle of using different contact points for current conduction and voltage measurement is used in precision shunt resistors for measuring large amounts of current. As discussed previously, shunt resistors function as current measurement devices by dropping a precise amount of voltage for every amp of current through them, the voltage drop being measured by a voltmeter. In this sense, a precision shunt resistor "converts" a current value into a proportional voltage value. Thus, current may be accurately measured by measuring voltage dropped across the shunt:

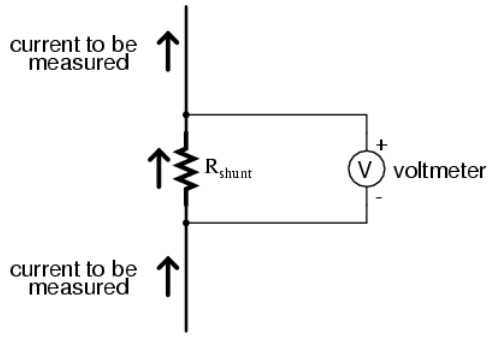

Current measurement using a shunt resistor and voltmeter is particularly well-suited for applications involving particularly large magnitudes of current. In such applications, the shunt resistor's resistance will likely be in the order of milliohms or microohms, so that only a modest amount of voltage will be dropped at full current. Resistance this low is comparable to wire connection resistance, which means voltage measured across such a shunt must be done so in such a way as to avoid detecting voltage dropped across the current-carrying wire connections, lest huge measurement errors be induced. In order that the voltmeter measure only the voltage dropped by the shunt resistance itself, without any stray voltages originating from wire or connection resistance, shunts are usually equipped with *four* connection terminals:

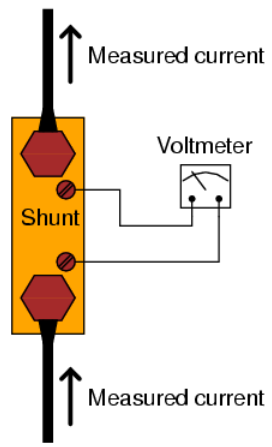

In metrological (*metrology = "the science of measurement"*) applications, where accuracy is of paramount importance, highly precise "standard" resistors are also equipped with four terminals: two for carrying the measured current, and two for conveying the resistor's voltage drop to the voltmeter. This way, the voltmeter only measures voltage dropped across the precision resistance itself, without any stray voltages dropped across current-carrying wires or wire-to-terminal connection resistances.

The following photograph shows a precision standard resistor of 1 Ω value immersed in a temperature-controlled oil bath with a few other standard resistors. Note the two large, outer terminals for current, and the two small connection terminals for voltage:

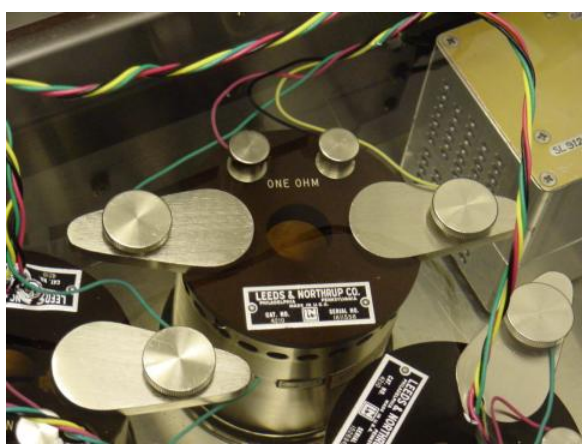

Here is another, older (pre-World War II) standard resistor of German manufacture. This unit has a resistance of 0.001 Ω, and again the four terminal connection points can be seen as black knobs (metal pads underneath each knob for direct metal-to-metal connection with the wires), two large knobs for securing the current-carrying wires, and two smaller knobs for securing the voltmeter ("potential") wires:

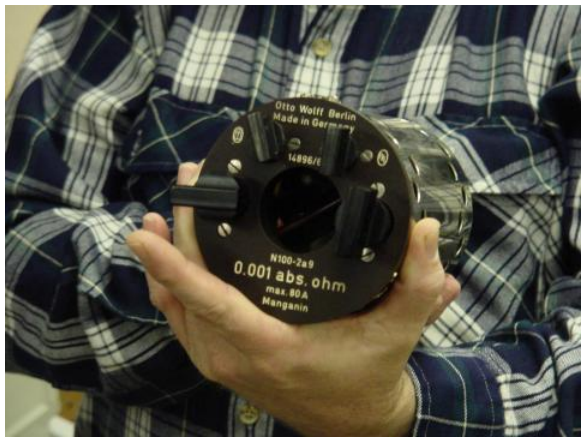

Appreciation is extended to the Fluke Corporation in Everett, Washington for allowing me to photograph these expensive and somewhat rare standard resistors in their primary standards laboratory.

It should be noted that resistance measurement using *both* an ammeter and a voltmeter is subject to compound error. Because the accuracy of both instruments factors in to the final result, the overall measurement accuracy may be worse than either instrument considered alone. For instance, if the ammeter is accurate to +/- 1% and the voltmeter is also accurate to +/- 1%, any measurement dependent on the indications of both instruments may be inaccurate by as much as +/- 2%.

Greater accuracy may be obtained by replacing the ammeter with a standard resistor, used as a current-measuring shunt. There will still be compound error between the standard resistor and the voltmeter used to measure voltage drop, but this will be less than with a voltmeter + ammeter arrangement because typical standard resistor accuracy far exceeds typical ammeter accuracy. Using Kelvin clips to make connection with the subject resistance, the circuit looks something like this:

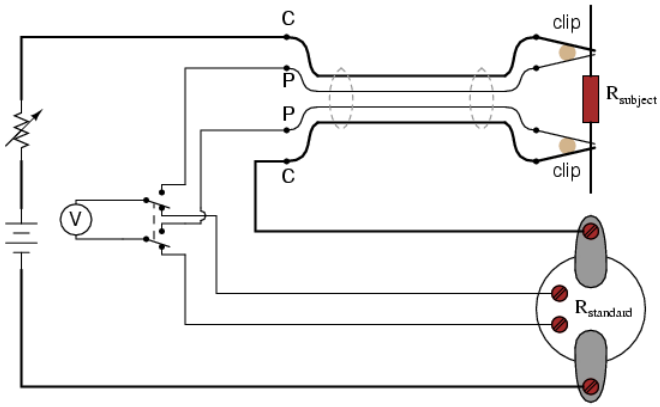

All current-carrying wires in the above circuit are shown in "bold," to easily distinguish them from wires connecting the voltmeter across both resistances ($R_{subject}$ and $R_{standard}$). Ideally, a potentiometric voltmeter is used to ensure as little current through the "potential" wires as possible.

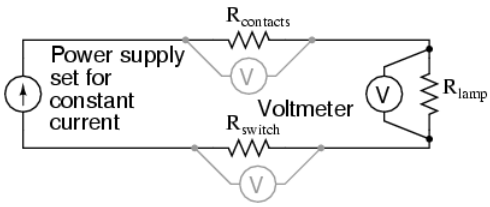

The Kelvin measurement can be a practical tool for finding poor connections or unexpected resistance in an electrical circuit. Connect a DC power supply to the circuit and adjust the power supply so that it supplies a constant current to the circuit as shown in the diagram above (within the circuit's capabilities, of course). With a digital multimeter set to measure DC voltage, measure the voltage drop across various points in the circuit. If you know the wire size, you can estimate the voltage drop you should see and compare this to the voltage drop you measure. This can be a quick and effective method of finding poor connections in wiring exposed to the elements, such as in the lighting circuits of a trailer. It can also work well for unpowered AC conductors (make sure the AC power cannot be turned on). For example, you can measure the voltage drop across a light switch and determine if the wiring connections to the switch or the switch's contacts are suspect. To be most effective using this technique, you should also measure the same type of circuits after they are newly made so you have a feel for the "correct" values. If you use this technique on new circuits and put the results in a log book, you have valuable information for troubleshooting in the future.

This page titled 8.9: Kelvin (4-wire) Resistance Measurement is shared under a GNU Free Documentation License 1.3 license and was authored, remixed, and/or curated by Tony R. Kuphaldt (All About Circuits) via source content that was edited to the style and standards of the LibreTexts platform.

8.10: Bridge Circuits

No text on electrical metering could be called complete without a section on bridge circuits. These ingenious circuits make use of a null-balance meter to compare two voltages, just like the laboratory balance scale compares two weights and indicates when they're equal. Unlike the "potentiometer" circuit used to simply measure an unknown voltage, bridge circuits can be used to measure all kinds of electrical values, not the least of which being resistance.

The standard bridge circuit, often called a *Wheatstone bridge*, looks something like this:

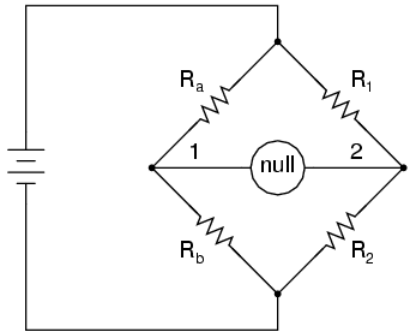

When the voltage between point 1 and the negative side of the battery is equal to the voltage between point 2 and the negative side of the battery, the null detector will indicate zero and the bridge is said to be "balanced." The bridge's state of balance is solely dependent on the ratios of R_a/R_b and R_1/R_2, and is quite independent of the supply voltage (battery). To measure resistance with a Wheatstone bridge, an unknown resistance is connected in the place of R_a or R_b, while the other three resistors are precision devices of known value. Either of the other three resistors can be replaced or adjusted until the bridge is balanced, and when balance has been reached the unknown resistor value can be determined from the ratios of the known resistances.

A requirement for this to be a measurement system is to have a set of variable resistors available whose resistances are precisely known, to serve as reference standards. For example, if we connect a bridge circuit to measure an unknown resistance R_x, we will have to know the *exact* values of the other three resistors at balance to determine the value of R_x:

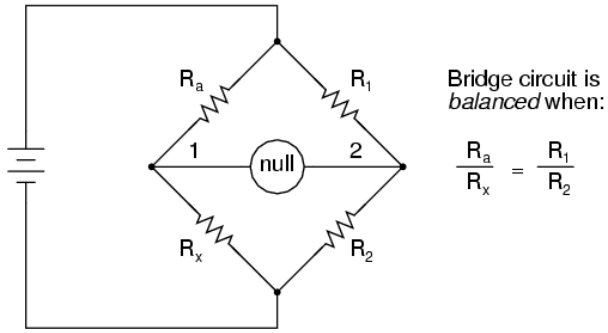

Each of the four resistances in a bridge circuit are referred to as *arms*. The resistor in series with the unknown resistance R_x (this would be R_a in the above schematic) is commonly called the *rheostat* of the bridge, while the other two resistors are called the *ratio* arms of the bridge.

Accurate and stable resistance standards, thankfully, are not that difficult to construct. In fact, they were some of the first electrical "standard" devices made for scientific purposes. Here is a photograph of an antique resistance standard unit:

This resistance standard shown here is variable in discrete steps: the amount of resistance between the connection terminals could be varied with the number and pattern of removable copper plugs inserted into sockets.

Wheatstone bridges are considered a superior means of resistance measurement to the series battery-movement-resistor meter circuit discussed in the last section. Unlike that circuit, with all its nonlinearities (nonlinear scale) and associated inaccuracies, the bridge circuit is linear (the mathematics describing its operation are based on simple ratios and proportions) and quite accurate.

Given standard resistances of sufficient precision and a null detector device of sufficient sensitivity, resistance measurement accuracies of at least +/- 0.05% are attainable with a Wheatstone bridge. It is the preferred method of resistance measurement in calibration laboratories due to its high accuracy.

There are many variations of the basic Wheatstone bridge circuit. Most DC bridges are used to measure resistance, while bridges powered by alternating current (AC) may be used to measure different electrical quantities like inductance, capacitance, and frequency.

An interesting variation of the Wheatstone bridge is the *Kelvin Double bridge*, used for measuring very low resistances (typically less than 1/10 of an ohm). Its schematic diagram is as such:

Kelvin Double bridge

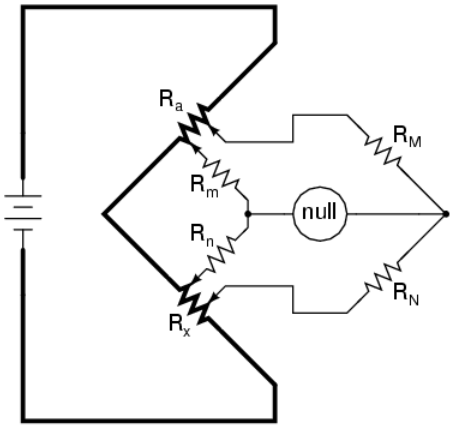

R_a and R_x are low-value resistances

The low-value resistors are represented by thick-line symbols, and the wires connecting them to the voltage source (carrying high current) are likewise drawn thickly in the schematic. This oddly-configured bridge is perhaps best understood by beginning with a standard Wheatstone bridge set up for measuring low resistance, and evolving it step-by-step into its final form in an effort to overcome certain problems encountered in the standard Wheatstone configuration.

If we were to use a standard Wheatstone bridge to measure low resistance, it would look something like this:

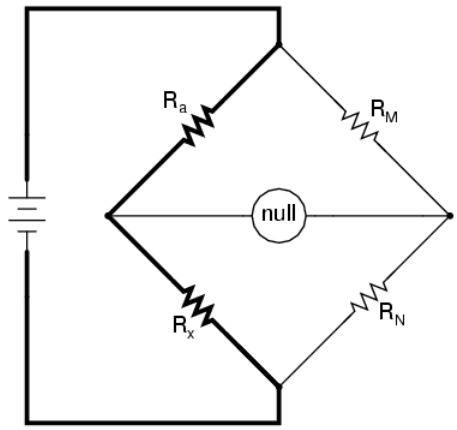

When the null detector indicates zero voltage, we know that the bridge is balanced and that the ratios $R_a/R_x$and R_M/R_N are mathematically equal to each other. Knowing the values of R_a, R_M, and R_N therefore provides us with the necessary data to solve for R_x . . . almost.

We have a problem, in that the connections and connecting wires between R_a and R_x possess resistance as well, and this stray resistance may be substantial compared to the low resistances of R_a and R_x. These stray resistances will drop substantial voltage, given the high current through them, and thus will affect the null detector's indication and thus the balance of the bridge:

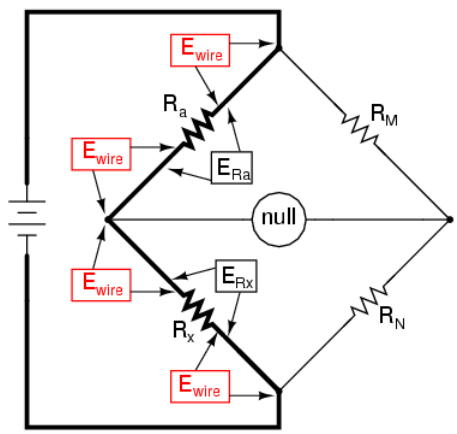

Stray E_{wire} voltages will corrupt the accuracy of R_x's measurement

Since we don't want to measure these stray wire and connection resistances, but only measure R_x, we must find some way to connect the null detector so that it won't be influenced by voltage dropped across them. If we connect the null detector and R_M/R_N ratio arms directly across the ends of R_a and R_x, this gets us closer to a practical solution:

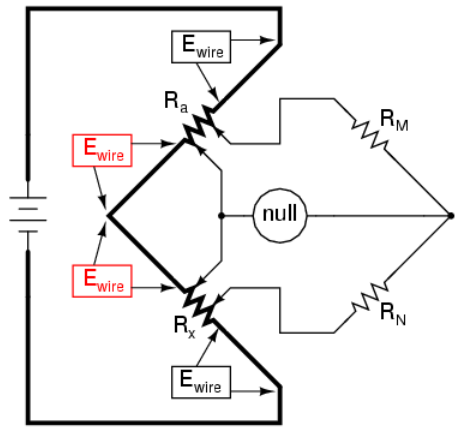

Now, only the two E_{wire} voltages are part of the null detector loop

Now the top two E_{wire} voltage drops are of no effect to the null detector, and do not influence the accuracy of R_x's resistance measurement. However, the two remaining E_{wire} voltage drops will cause problems, as the wire connecting the lower end of R_a with the top end of R_x is now shunting across those two voltage drops, and will conduct substantial current, introducing stray voltage drops along its own length as well.

Knowing that the left side of the null detector must connect to the two near ends of R_a and R_x in order to avoid introducing those E_{wire} voltage drops into the null detector's loop, and that any direct wire connecting those ends of R_a and R_x will itself carry substantial current and create more stray voltage drops, the only way out of this predicament is to make the connecting path between the lower end of R_a and the upper end of R_x substantially resistive:

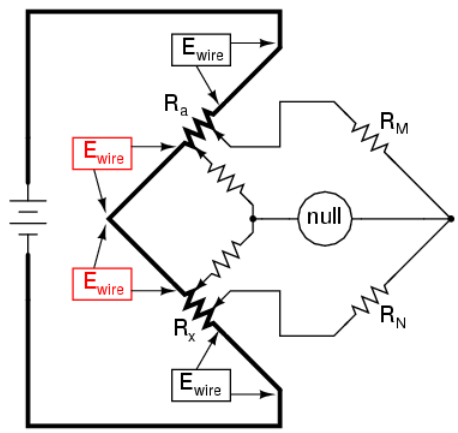

We can manage the stray voltage drops between R_a and R_x by sizing the two new resistors so that their ratio from upper to lower is the same ratio as the two ratio arms on the other side of the null detector. This is why these resistors were labeled R_m and R_n in the original Kelvin Double bridge schematic: to signify their proportionality with R_M and R_N:

Kelvin Double bridge

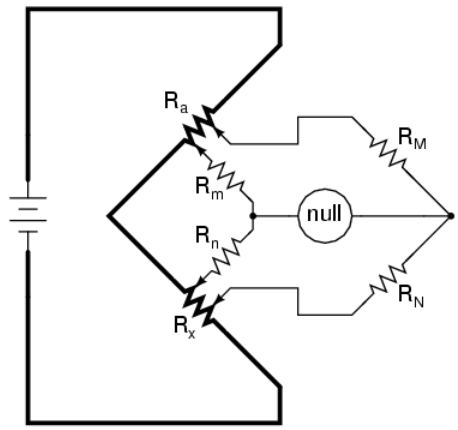

R_a and R_x are low-value resistances

With ratio R_m/R_n set equal to ratio R_M/R_N, rheostat arm resistor R_a is adjusted until the null detector indicates balance, and then we can say that R_a/R_x is equal to R_M/R_N, or simply find R_x by the following equation:

$$R_x = R_a \frac{R_N}{R_M}$$

The actual balance equation of the Kelvin Double bridge is as follows (R_{wire} is the resistance of the thick, connecting wire between the low-resistance standard R_a and the test resistance R_x):

$$\frac{R_x}{R_a} = \frac{R_N}{R_M} + \frac{R_{wire}}{R_a}\left(\frac{R_m}{R_m + R_n + R_{wire}}\right)\left(\frac{R_N}{R_M} - \frac{R_n}{R_m}\right)$$

So long as the ratio between R_M and R_N is equal to the ratio between R_m and R_n, the balance equation is no more complex than that of a regular Wheatstone bridge, with R_x/R_a equal to R_N/R_M, because the last term in the equation will be zero, canceling the effects of all resistances except R_x, R_a, R_M, and R_N.

In many Kelvin Double bridge circuits, R_M=R_m and R_N=R_n. However, the lower the resistances of R_m and R_n, the more sensitive the null detector will be, because there is less resistance in series with it. Increased detector sensitivity is good, because it allows smaller imbalances to be detected, and thus a finer degree of bridge balance to be attained. Therefore, some high-precision Kelvin Double bridges use R_m and R_n values as low as 1/100 of their ratio arm counterparts (R_M and R_N, respectively). Unfortunately, though, the lower the values of R_m and R_n, the more current they will carry, which will increase the effect of any junction resistances present where R_m and R_n connect to the ends of R_a and R_x. As you can see, high instrument accuracy demands that *all* error-producing factors be taken into account, and often the best that can be achieved is a compromise minimizing two or more different kinds of errors.

Review

- Bridge circuits rely on sensitive null-voltage meters to compare two voltages for equality.
- A *Wheatstone bridge* can be used to measure resistance by comparing the unknown resistor against precision resistors of known value, much like a laboratory scale measures an unknown weight by comparing it against known standard weights.
- A *Kelvin Double bridge* is a variant of the Wheatstone bridge used for measuring very low resistances. Its additional complexity over the basic Wheatstone design is necessary for avoiding errors otherwise incurred by stray resistances along the current path between the low-resistance standard and the resistance being measured.

This page titled 8.10: Bridge Circuits is shared under a GNU Free Documentation License 1.3 license and was authored, remixed, and/or curated by Tony R. Kuphaldt (All About Circuits) via source content that was edited to the style and standards of the LibreTexts platform.

8.11: Wattmeter Design

Power in an electric circuit is the product (multiplication) of voltage *and* current, so any meter designed to measure power must account for *both* of these variables.

A special meter movement designed especially for power measurement is called the *dynamometer* movement, and is similar to a D'Arsonval or Weston movement in that a lightweight coil of wire is attached to the pointer mechanism. However, unlike the D'Arsonval or Weston movement, another (stationary) coil is used instead of a permanent magnet to provide the magnetic field for the moving coil to react against. The moving coil is generally energized by the voltage in the circuit, while the stationary coil is generally energized by the current in the circuit. A dynamometer movement connected in a circuit looks something like this:

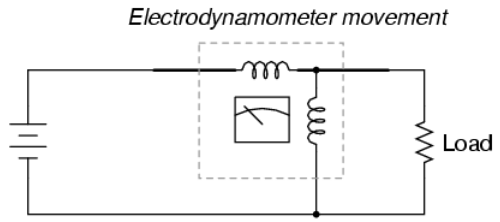

The top (horizontal) coil of wire measures load current while the bottom (vertical) coil measures load voltage. Just like the lightweight moving coils of voltmeter movements, the (moving) voltage coil of a dynamometer is typically connected in series with a range resistor so that full load voltage is not applied to it. Likewise, the (stationary) current coil of a dynamometer may have precision shunt resistors to divide the load current around it. With custom-built dynamometer movements, shunt resistors are less likely to be needed because the stationary coil can be constructed with as heavy of wire as needed without impacting meter response, unlike the moving coil which must be constructed of lightweight wire for minimum inertia.

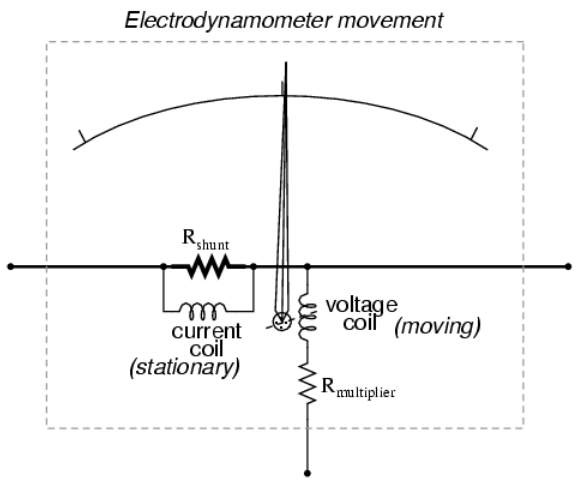

Review

- Wattmeters are often designed around dynamometer meter movements, which employ both voltage and current coils to move a needle.

This page titled 8.11: Wattmeter Design is shared under a GNU Free Documentation License 1.3 license and was authored, remixed, and/or curated by Tony R. Kuphaldt (All About Circuits) via source content that was edited to the style and standards of the LibreTexts platform.

8.12: Creating Custom Calibration Resistances

Often in the course of designing and building electrical meter circuits, it is necessary to have precise resistances to obtain the desired range(s). More often than not, the resistance values required cannot be found in any manufactured resistor unit and therefore must be built by you.

One solution to this dilemma is to make your own resistor out of a length of special high-resistance wire. Usually, a small "bobbin" is used as a form for the resulting wire coil, and the coil is wound in such a way as to eliminate any electromagnetic effects: the desired wire length is folded in half, and the looped wire wound around the bobbin so that current through the wire winds clockwise around the bobbin for half the wire's length, then counter-clockwise for the other half. This is known as a *bifilar winding*. Any magnetic fields generated by the current are thus canceled, and external magnetic fields cannot induce any voltage in the resistance wire coil:

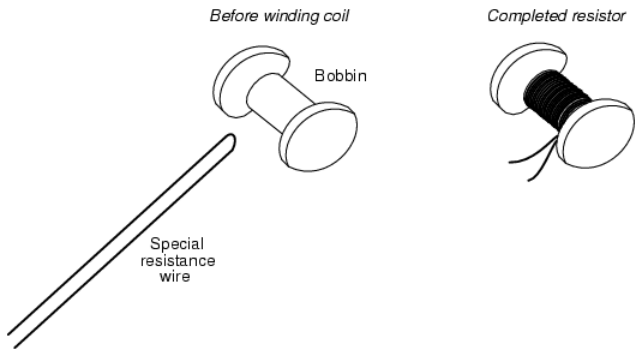

As you might imagine, this can be a labor-intensive process, especially if more than one resistor must be built! Another, easier solution to the dilemma of a custom resistance is to connect multiple fixed-value resistors together in series-parallel fashion to obtain the desired value of resistance. This solution, although potentially time-intensive in choosing the best resistor values for making the first resistance, can be duplicated much faster for creating multiple custom resistances of the same value:

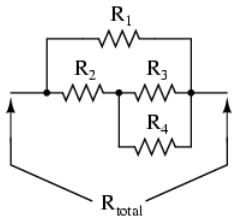

A disadvantage of either technique, though, is the fact that both result in a *fixed* resistance value. In a perfect world where meter movements never lose magnetic strength of their permanent magnets, where temperature and time have no effect on component resistances, and where wire connections maintain zero resistance forever, fixed-value resistors work quite well for establishing the ranges of precision instruments. However, in the real world, it is advantageous to have the ability to *calibrate*, or adjust, the instrument in the future.

It makes sense, then, to use potentiometers (connected as rheostats, usually) as variable resistances for range resistors. The potentiometer may be mounted inside the instrument case so that only a service technician has access to change its value, and the shaft may be locked in place with thread-fastening compound (ordinary nail polish works well for this!) so that it will not move if subjected to vibration.

However, most potentiometers provide too large a resistance span over their mechanically-short movement range to allow for precise adjustment. Suppose you desired a resistance of 8.335 kΩ +/- 1 Ω, and wanted to use a 10 kΩ potentiometer (rheostat) to obtain it. A precision of 1 Ω out of a span of 10 kΩ is 1 part in 10,000, or 1/100 of a percent! Even with a 10-turn potentiometer, it will be very difficult to adjust it to any value this finely. Such a feat would be nearly impossible using a standard 3/4 turn potentiometer. So how can we get the resistance value we need and still have room for adjustment?

The solution to this problem is to use a potentiometer as part of a larger resistance network which will create a limited adjustment range. Observe the following example:

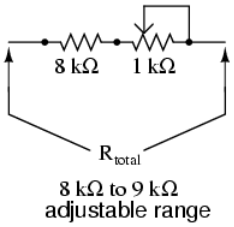

Here, the 1 kΩ potentiometer, connected as a rheostat, provides by itself a 1 kΩ span (a range of 0 Ω to 1 kΩ). Connected in series with an 8 kΩ resistor, this offsets the total resistance by 8,000 Ω, giving an adjustable range of 8 kΩ to 9 kΩ. Now, a precision of +/- 1 Ω represents 1 part in 1000, or 1/10 of a percent of potentiometer shaft motion. This is ten times better, in terms of adjustment sensitivity, than what we had using a 10 kΩ potentiometer.

If we desire to make our adjustment capability even more precise—so we can set the resistance at 8.335 kΩ with even greater precision—we may reduce the span of the potentiometer by connecting a fixed-value resistor in parallel with it:

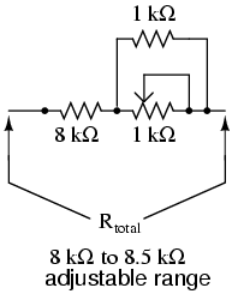

Now, the calibration span of the resistor network is only 500 Ω, from 8 kΩ to 8.5 kΩ. This makes a precision of +/- 1 Ω equal to 1 part in 500, or 0.2 percent. The adjustment is now half as sensitive as it was before the addition of the parallel resistor, facilitating much easier calibration to the target value. The adjustment will not be linear, unfortunately (halfway on the potentiometer's shaft position will *not* result in 8.25 kΩ total resistance, but rather 8.333 kΩ). Still, it is an improvement in terms of sensitivity, and it is a practical solution to our problem of building an adjustable resistance for a precision instrument!

This page titled 8.12: Creating Custom Calibration Resistances is shared under a GNU Free Documentation License 1.3 license and was authored, remixed, and/or curated by Tony R. Kuphaldt (All About Circuits) via source content that was edited to the style and standards of the LibreTexts platform.

CHAPTER OVERVIEW

9: Electrical Instrumentation Signals

9.1: Analog and Digital Signals
9.2: Voltage Signal Systems
9.3: Current Signal Systems
9.4: Tachogenerators
9.5: Thermocouples
9.6: pH Measurement
9.7: Strain Gauges

This page titled 9: Electrical Instrumentation Signals is shared under a GNU Free Documentation License 1.3 license and was authored, remixed, and/or curated by Tony R. Kuphaldt (All About Circuits) via source content that was edited to the style and standards of the LibreTexts platform.

9.1: Analog and Digital Signals

Instrumentation is a field of study and work centering on measurement and control of physical processes. These physical processes include pressure, temperature, flow rate, and chemical consistency. An instrument is a device that measures and/or acts to control any kind of physical process. Due to the fact that electrical quantities of voltage and current are easy to measure, manipulate, and transmit over long distances, they are widely used to represent such physical variables and transmit the information to remote locations.

A *signal* is any kind of physical quantity that conveys information. Audible speech is certainly a kind of signal, as it conveys the thoughts (information) of one person to another through the physical medium of sound. Hand gestures are signals, too, conveying information by means of light. This text is another kind of signal, interpreted by your English-trained mind as information about electric circuits. In this chapter, the word *signal* will be used primarily in reference to an electrical quantity of voltage or current that is used to *represent* or *signify* some other physical quantity.

An *analog* signal is a kind of signal that is continuously variable, as opposed to having a limited number of steps along its range (called *digital*). A well-known example of analog vs. digital is that of clocks: analog being the type with pointers that slowly rotate around a circular scale, and digital being the type with decimal number displays or a “second-hand” that jerks rather than smoothly rotates. The analog clock has no physical limit to how finely it can display the time, as its “hands” move in a smooth, pauseless fashion. The digital clock, on the other hand, cannot convey any unit of time smaller than what its display will allow for. The type of clock with a “second-hand” that jerks in 1-second intervals is a digital device with a minimum *resolution* of one second.

Both analog and digital signals find application in modern electronics, and the distinctions between these two basic forms of information is something to be covered in much greater detail later in this book. For now, I will limit the scope of this discussion to analog signals, since the systems using them tend to be of simpler design.

With many physical quantities, especially electrical, analog variability is easy to come by. If such a physical quantity is used as a signal medium, it will be able to represent variations of information with almost unlimited resolution.

In the early days of industrial instrumentation, compressed air was used as a signaling medium to convey information from measuring instruments to indicating and controlling devices located remotely. The amount of air pressure corresponded to the magnitude of whatever variable was being measured. Clean, dry air at approximately 20 pounds per square inch (PSI) was supplied from an air compressor through tubing to the measuring instrument and was then regulated by that instrument according to the quantity being measured to produce a corresponding output signal. For example, a pneumatic (air signal) level “transmitter” device set up to measure height of water (the “process variable”) in a storage tank would output a low air pressure when the tank was empty, a medium pressure when the tank was partially full, and a high pressure when the tank was completely full.

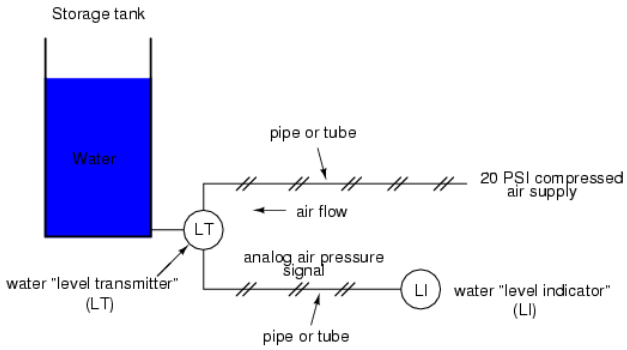

The “water level indicator” (LI) is nothing more than a pressure gauge measuring the air pressure in the pneumatic signal line. This air pressure, being a *signal*, is in turn a representation of the water level in the tank. Any variation of level in the tank can be represented by an appropriate variation in the pressure of the pneumatic signal. Aside from certain practical limits imposed by the mechanics of air pressure devices, this pneumatic signal is infinitely variable, able to represent any degree of change in the water’s level, and is therefore *analog* in the truest sense of the word.

Crude as it may appear, this kind of pneumatic signaling system formed the backbone of many industrial measurement and control systems around the world, and still sees use today due to its simplicity, safety, and reliability. Air pressure signals are easily

transmitted through inexpensive tubes, easily measured (with mechanical pressure gauges), and are easily manipulated by mechanical devices using bellows, diaphragms, valves, and other pneumatic devices. Air pressure signals are not only useful for *measuring* physical processes, but for *controlling* them as well. With a large enough piston or diaphragm, a small air pressure signal can be used to generate a large mechanical force, which can be used to move a valve or other controlling device. Complete automatic control systems have been made using air pressure as the signal medium. They are simple, reliable, and relatively easy to understand. However, the practical limits for air pressure signal accuracy can be too limiting in some cases, especially when the compressed air is not clean and dry, and when the possibility for tubing leaks exist.

With the advent of solid-state electronic amplifiers and other technological advances, electrical quantities of voltage and current became practical for use as analog instrument signaling media. Instead of using pneumatic pressure signals to relay information about the fullness of a water storage tank, electrical signals could relay that same information over thin wires (instead of tubing) and not require the support of such expensive equipment as air compressors to operate:

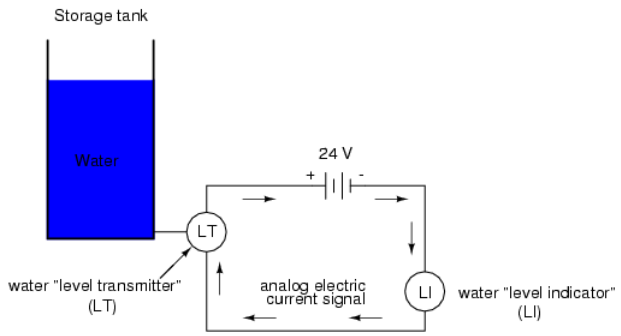

Analog electronic signals are still the primary kinds of signals used in the instrumentation world today (January of 2001), but it is giving way to digital modes of communication in many applications (more on that subject later). Despite changes in technology, it is always good to have a thorough understanding of fundamental principles, so the following information will never really become obsolete.

One important concept applied in many analog instrumentation signal systems is that of “live zero,” a standard way of scaling a signal so that an indication of 0 percent can be discriminated from the status of a “dead” system. Take the pneumatic signal system as an example: if the signal pressure range for transmitter and indicator was designed to be 0 to 12 PSI, with 0 PSI representing 0 percent of process measurement and 12 PSI representing 100 percent, a received signal of 0 percent could be a legitimate reading of 0 percent measurement *or* it could mean that the system was malfunctioning (air compressor stopped, tubing broken, transmitter malfunctioning, etc.). With the 0 percent point represented by 0 PSI, there would be no easy way to distinguish one from the other.

If, however, we were to scale the instruments (transmitter and indicator) to use a scale of 3 to 15 PSI, with 3 PSI representing 0 percent and 15 PSI representing 100 percent, any kind of a malfunction resulting in zero air pressure at the indicator would generate a reading of -25 percent (0 PSI), which is clearly a faulty value. The person looking at the indicator would then be able to immediately tell that something was wrong.

Not all signal standards have been set up with live zero baselines, but the more robust signals standards (3-15 PSI, 4-20 mA) have, and for good reason.

REVIEW

- A *signal* is any kind of detectable quantity used to communicate information.
- An *analog* signal is a signal that can be continuously, or infinitely, varied to represent any small amount of change.
- *Pneumatic*, or air pressure, signals used to be used predominately in industrial instrumentation signal systems. This has been largely superseded by analog electrical signals such as voltage and current.
- A *live zero* refers to an analog signal scale using a non-zero quantity to represent 0 percent of real-world measurement so that any system malfunction resulting in a natural “rest” state of zero signal pressure, voltage, or current can be immediately recognized.

This page titled 9.1: Analog and Digital Signals is shared under a GNU Free Documentation License 1.3 license and was authored, remixed, and/or curated by Tony R. Kuphaldt (All About Circuits) via source content that was edited to the style and standards of the LibreTexts platform.

9.2: Voltage Signal Systems

The use of variable voltage for instrumentation signals seems a rather obvious option to explore. Let's see how a voltage signal instrument might be used to measure and relay information about water tank level:

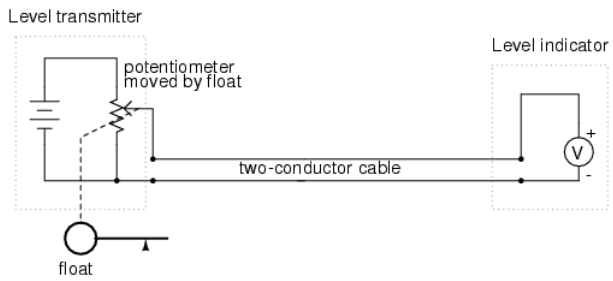

The "transmitter" in this diagram contains its own precision regulated source of voltage, and the potentiometer setting is varied by the motion of a float inside the water tank following the water level. The "indicator" is nothing more than a voltmeter with a scale calibrated to read in some unit height of water (inches, feet, meters) instead of volts.

As the water tank level changes, the float will move. As the float moves, the potentiometer wiper will correspondingly be moved, dividing a different proportion of the battery voltage to go across the two-conductor cable and on to the level indicator. As a result, the voltage received by the indicator will be representative of the level of water in the storage tank.

This elementary transmitter/indicator system is reliable and easy to understand, but it has its limitations. Perhaps greatest is the fact that the system accuracy can be influenced by excessive cable resistance. Remember that real voltmeters draw small amounts of current, even though it is ideal for a voltmeter not to draw any current at all. This being the case, especially for the kind of heavy, rugged analog meter movement likely used for an industrial-quality system, there will be a small amount of current through the 2-conductor cable wires. The cable, having a small amount of resistance along its length, will consequently drop a small amount of voltage, leaving less voltage across the indicator's leads than what is across the leads of the transmitter. This loss of voltage, however small, constitutes an error in measurement:

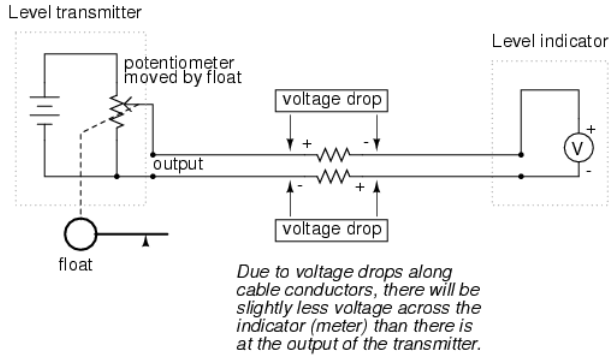

Resistor symbols have been added to the wires of the cable to show what is happening in a real system. Bear in mind that these resistances can be minimized with heavy-gauge wire (at additional expense) and/or their effects mitigated through the use of a high-resistance (null-balance?) voltmeter for an indicator (at additional complexity).

Despite this inherent disadvantage, voltage signals are still used in many applications because of their extreme design simplicity. One common signal standard is 0-10 volts, meaning that a signal of 0 volts represents 0 percent of measurement, 10 volts represents 100 percent of measurement, 5 volts represents 50 percent of measurement, and so on. Instruments designed to output and/or accept this standard signal range are available for purchase from major manufacturers. A more common voltage range is 1-5 volts, which makes use of the "live zero" concept for circuit fault indication.

Review

- DC voltage can be used as an analog signal to relay information from one location to another.

- A major disadvantage of voltage signaling is the possibility that the voltage at the indicator (voltmeter) will be less than the voltage at the signal source, due to line resistance and indicator current draw. This drop in voltage along the conductor length constitutes a measurement error from transmitter to indicator.

This page titled 9.2: Voltage Signal Systems is shared under a GNU Free Documentation License 1.3 license and was authored, remixed, and/or curated by Tony R. Kuphaldt (All About Circuits) via source content that was edited to the style and standards of the LibreTexts platform.

9.3: Current Signal Systems

It is possible through the use of electronic amplifiers to design a circuit outputting a constant amount of current rather than a constant amount of voltage. This collection of components is collectively known as a *current source*, and its symbol looks like this:

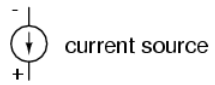

A current source generates as much or as little voltage as needed across its leads to produce a constant amount of current through it. This is just the opposite of a voltage source (an ideal battery), which will output as much or as little current as demanded by the external circuit in maintaining its output voltage constant. Following the "conventional flow" symbology typical of electronic devices, the arrow points *against* the direction of electron motion. Apologies for this confusing notation: another legacy of Benjamin Franklin's false assumption of electron flow!

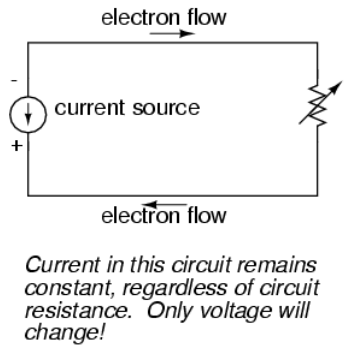

Current sources can be built as variable devices, just like voltage sources, and they can be designed to produce very precise amounts of current. If a transmitter device were to be constructed with a variable current source instead of a variable voltage source, we could design an instrumentation signal system based on current instead of voltage:

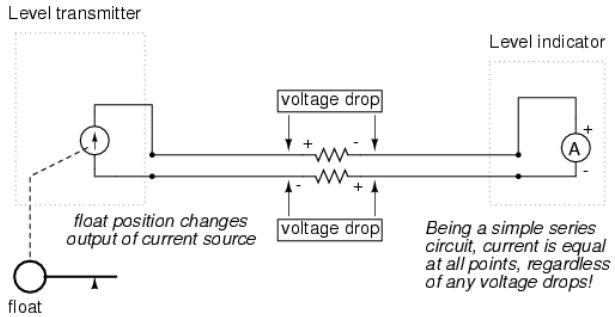

The internal workings of the transmitter's current source need not be a concern at this point, only the fact that its output varies in response to changes in the float position, just like the potentiometer setup in the voltage signal system varied voltage output according to float position.

Notice now how the indicator is an ammeter rather than a voltmeter (the scale calibrated in inches, feet, or meters of water in the tank, as always). Because the circuit is a series configuration (accounting for the cable resistances), current will be *precisely equal* through all components. With or without cable resistance, the current at the indicator is exactly the same as the current at the transmitter, and therefore there is no error incurred as there might be with a voltage signal system. This assurance of zero signal degradation is a decided advantage of current signal systems over voltage signal systems.

The most common current signal standard in modern use is the *4 to 20 milliamp* (4-20 mA) loop, with 4 milliamps representing 0 percent of measurement, 20 milliamps representing 100 percent, 12 milliamps representing 50 percent, and so on. A convenient feature of the 4-20 mA standard is its ease of signal conversion to 1-5 volt indicating instruments. A simple 250 ohm precision resistor connected in series with the circuit will produce 1 volt of drop at 4 milliamps, 5 volts of drop at 20 milliamps, etc:

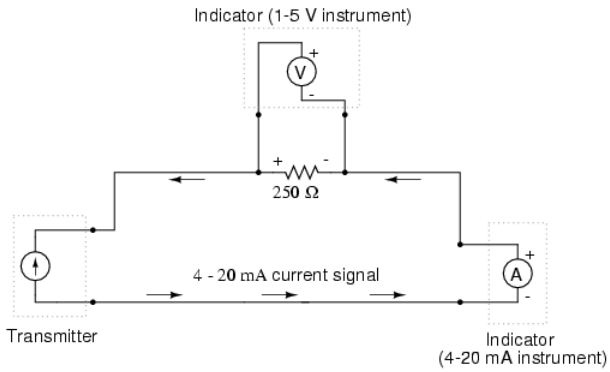

Percent of measurement	4-20 mA signal	1-5 V signal
0	4.0 mA	1.0 V
10	5.6 mA	1.4 V
20	7.2 mA	1.8 V
25	8.0 mA	2.0 V
30	8.8 mA	2.2 V
40	10.4 mA	2.6 V
50	12.0 mA	3.0 V
60	13.6 mA	3.4 V
70	15.2 mA	3.8 V
75	16.0 mA	4.0 V
80	16.8 mA	4.2 V
90	18.4 mA	4.6 V
100	20.0 mA	5.0 V

The current loop scale of 4-20 milliamps has not always been *the* standard for current instruments: for a while there was also a 10-50 milliamp standard, but that standard has since been obsoleted. One reason for the eventual supremacy of the 4-20 milliamp loop was safety: with lower circuit voltages and lower current levels than in 10-50 mA system designs, there was less chance for personal shock injury and/or the generation of sparks capable of igniting flammable atmospheres in certain industrial environments.

Review

- A *current source* is a device (usually constructed of several electronic components) that outputs a constant amount of current through a circuit, much like a voltage source (ideal battery) outputting a constant amount of voltage to a circuit.
- A current "loop" instrumentation circuit relies on the series circuit principle of current being equal through all components to insure no signal error due to wiring resistance.
- The most common analog current signal standard in modern use is the "4 to 20 milliamp current loop."

This page titled 9.3: Current Signal Systems is shared under a GNU Free Documentation License 1.3 license and was authored, remixed, and/or curated by Tony R. Kuphaldt (All About Circuits) via source content that was edited to the style and standards of the LibreTexts platform.

9.4: Tachogenerators

An electromechanical generator is a device capable of producing electrical power from mechanical energy, usually the turning of a shaft. When not connected to a load resistance, generators will generate voltage roughly proportional to shaft speed. With precise construction and design, generators can be built to produce very precise voltages for certain ranges of shaft speeds, thus making them well-suited as measurement devices for shaft speed in mechanical equipment. A generator specially designed and constructed for this use is called a *tachometer* or *tachogenerator*. Often, the word "tach" (pronounced "tack") is used rather than the whole word.

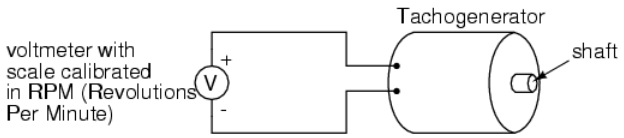

By measuring the voltage produced by a tachogenerator, you can easily determine the rotational speed of whatever its mechanically attached to. One of the more common voltage signal ranges used with tachogenerators is 0 to 10 volts. Obviously, since a tachogenerator cannot produce voltage when its not turning, the zero cannot be "live" in this signal standard. Tachogenerators can be purchased with different "full-scale" (10 volt) speeds for different applications. Although a voltage divider could theoretically be used with a tachogenerator to extend the measurable speed range in the 0-10 volt scale, it is not advisable to significantly overspeed a precision instrument like this, or its life will be shortened.

Tachogenerators can also indicate the direction of rotation by the polarity of the output voltage. When a permanent-magnet style DC generator's rotational direction is reversed, the polarity of its output voltage will switch. In measurement and control systems where directional indication is needed, tachogenerators provide an easy way to determine that.

Tachogenerators are frequently used to measure the speeds of electric motors, engines, and the equipment they power: conveyor belts, machine tools, mixers, fans, etc.

This page titled 9.4: Tachogenerators is shared under a GNU Free Documentation License 1.3 license and was authored, remixed, and/or curated by Tony R. Kuphaldt (All About Circuits) via source content that was edited to the style and standards of the LibreTexts platform.

9.5: Thermocouples

An interesting phenomenon applied in the field of instrumentation is the **Seebeck effect**, which is the production of a small voltage across the length of a wire due to a difference in temperature along that wire. This effect is most easily observed and applied with a junction of two dissimilar metals in contact, each metal producing a different Seebeck voltage along its length, which translates to a voltage between the two (unjoined) wire ends. Most any pair of dissimilar metals will produce a measurable voltage when their junction is heated, some combinations of metals producing more voltage per degree of temperature than others:

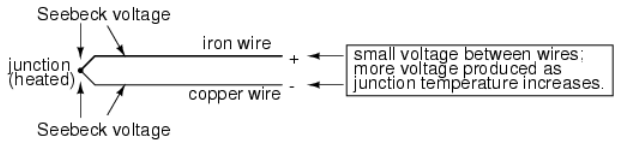

The Seebeck effect is fairly linear; that is, the voltage produced by a heated junction of two wires is directly proportional to the temperature. This means that the temperature of the metal wire junction can be determined by measuring the voltage produced. Thus, the Seebeck effect provides for us an electric method of temperature measurement.

When a pair of dissimilar metals are joined together for the purpose of measuring temperature, the device formed is called a **thermocouple**. Thermocouples made for instrumentation use metals of high purity for an accurate temperature/voltage relationship (as linear and as predictable as possible).

Seebeck voltages are quite small, in the tens of millivolts for most temperature ranges. This makes them somewhat difficult to measure accurately. Also, the fact that *any* junction between dissimilar metals will produce temperature-dependent voltage creates a problem when we try to connect the thermocouple to a voltmeter, completing a circuit:

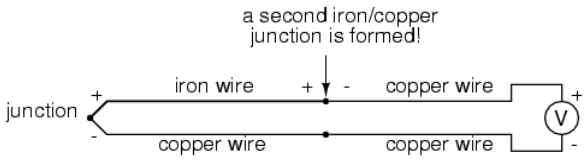

The second iron/copper junction formed by the connection between the thermocouple and the meter on the top wire will produce a temperature-dependent voltage opposed in polarity to the voltage produced at the measurement junction. This means that the voltage between the voltmeter's copper leads will be a function of the *difference* in temperature between the two junctions, and not the temperature at the measurement junction alone. Even for thermocouple types where copper is not one of the dissimilar metals, the combination of the two metals joining the copper leads of the measuring instrument forms a junction equivalent to the measurement junction:

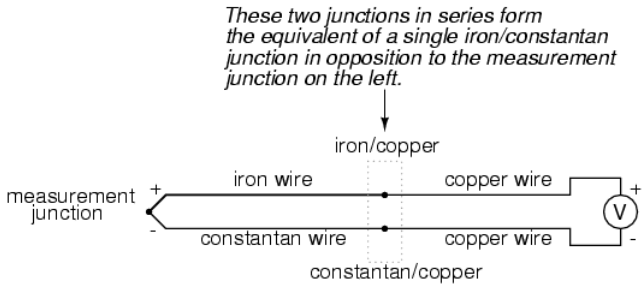

This second junction is called the **reference** or **cold junction**, to distinguish it from the junction at the measuring end, and there is no way to avoid having one in a thermocouple circuit. In some applications, a differential temperature measurement between two points is required, and this inherent property of thermocouples can be exploited to make a very simple measurement system.

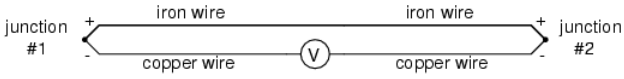

However, in most applications the intent is to measure temperature at a single point only, and in these cases the second junction becomes a liability to function.

Compensation for the voltage generated by the reference junction is typically performed by a special circuit designed to measure temperature there and produce a corresponding voltage to counter the reference junction's effects. At this point you may wonder, "If we have to resort to some other form of temperature measurement just to overcome an idiosyncrasy with thermocouples, then why bother using thermocouples to measure temperature at all? Why not just use this other form of temperature measurement, whatever it may be, to do the job?" The answer is this: because the other forms of temperature measurement used for reference junction compensation are not as robust or versatile as a thermocouple junction, but do the job of measuring room temperature at the reference junction site quite well. For example, the thermocouple measurement junction may be inserted into the 1800 degree (F) flue of a foundry holding furnace, while the reference junction sits a hundred feet away in a metal cabinet at ambient temperature, having its temperature measured by a device that could never survive the heat or corrosive atmosphere of the furnace.

The voltage produced by thermocouple junctions is strictly dependent upon temperature. Any current in a thermocouple circuit is a function of circuit resistance in opposition to this voltage (I=E/R). In other words, the relationship between temperature and Seebeck voltage is fixed, while the relationship between temperature and current is variable, depending on the total resistance of the circuit. With heavy enough thermocouple conductors, currents upwards of hundreds of amps can be generated from a single pair of thermocouple junctions! (I've actually seen this in a laboratory experiment, using heavy bars of copper and copper/nickel alloy to form the junctions and the circuit conductors.)

For measurement purposes, the voltmeter used in a thermocouple circuit is designed to have a very high resistance so as to avoid any error-inducing voltage drops along the thermocouple wire. The problem of voltage drop along the conductor length is even more severe here than with the DC voltage signals discussed earlier, because here we only have a few millivolts of voltage produced by the junction. We simply cannot afford to have even a single millivolt of drop along the conductor lengths without incurring serious temperature measurement errors.

Ideally, then, current in a thermocouple circuit is zero. Early thermocouple indicating instruments made use of null-balance potentiometric voltage measurement circuitry to measure the junction voltage. The early Leeds & Northrup "Speedomax" line of temperature indicator/recorders were a good example of this technology. More modern instruments use semiconductor amplifier circuits to allow the thermocouple's voltage signal to drive an indication device with little or no current drawn in the circuit.

Thermocouples, however, can be built from heavy-gauge wire for low resistance, and connected in such a way so as to generate very high currents for purposes other than temperature measurement. One such purpose is electric power generation. By connecting many thermocouples in series, alternating hot/cold temperatures with each junction, a device called a *thermopile* can be constructed to produce substantial amounts of voltage and current:

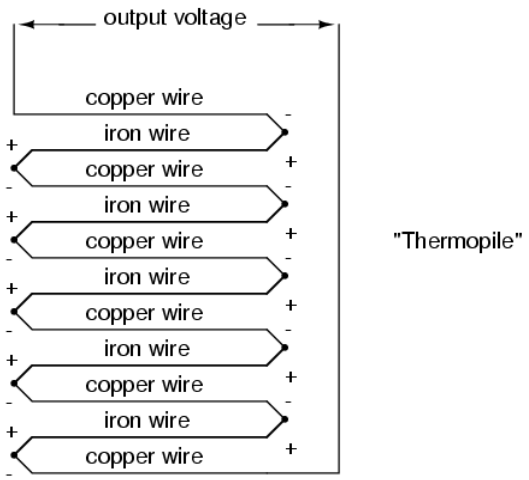

With the left and right sets of junctions at the same temperature, the voltage at each junction will be equal and the opposing polarities would cancel to a final voltage of zero. However, if the left set of junctions were heated and the right set cooled, the voltage at each left junction would be greater than each right junction, resulting in a total output voltage equal to the sum of all

junction pair differentials. In a thermopile, this is exactly how things are set up. A source of heat (combustion, strong radioactive substance, solar heat, etc.) is applied to one set of junctions, while the other set is bonded to a heat sink of some sort (air- or water-cooled). Interestingly enough, as electrons flow through an external load circuit connected to the thermopile, heat energy is transferred from the hot junctions to the cold junctions, demonstrating another thermo-electric phenomenon: the so-called *Peltier Effect* (electric current transferring heat energy).

Another application for thermocouples is in the measurement of *average* temperature between several locations. The easiest way to do this is to connect several thermocouples in parallel with each other. The millivolt signal produced by each thermocouple will average out at the parallel junction point. The voltage differences between the junctions drop along the resistances of the thermocouple wires:

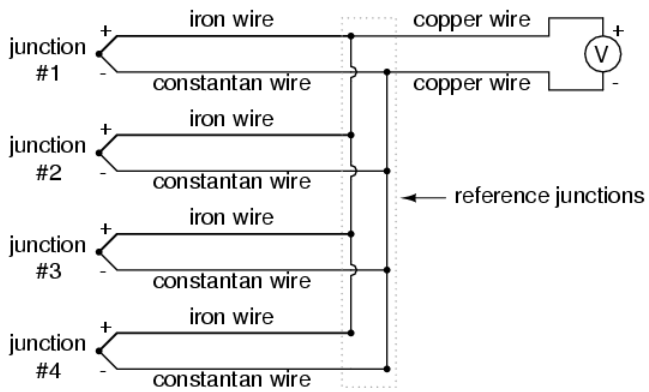

Unfortunately, though, the accurate averaging of these Seebeck voltage potentials relies on each thermocouple's wire resistances being equal. If the thermocouples are located at different places and their wires join in parallel at a single location, equal wire length will be unlikely. The thermocouple having the greatest wire length from point of measurement to parallel connection point will tend to have the greatest resistance, and will therefore have the least effect on the average voltage produced.

To help compensate for this, additional resistance can be added to each of the parallel thermocouple circuit branches to make their respective resistances more equal. Without custom-sizing resistors for each branch (to make resistances precisely equal between all the thermocouples), it is acceptable to simply install resistors with equal values, significantly higher than the thermocouple wires' resistances so that those wire resistances will have a much smaller impact on the total branch resistance. These resistors are called *swamping* resistors, because their relatively high values overshadow or "swamp" the resistances of the thermocouple wires themselves:

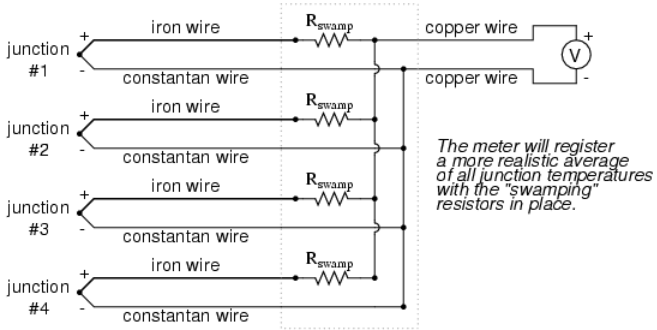

Because thermocouple junctions produce such low voltages, it is imperative that wire connections be very clean and tight for accurate and reliable operation. Also, the location of the reference junction (the place where the dissimilar-metal thermocouple wires join to standard copper) must be kept close to the measuring instrument, to ensure that the instrument can accurately compensate for reference junction temperature. Despite these seemingly restrictive requirements, thermocouples remain one of the most robust and popular methods of industrial temperature measurement in modern use.

Review

- The *Seebeck Effect* is the production of a voltage between two dissimilar, joined metals that is proportional to the temperature of that junction.
- In any thermocouple circuit, there are two equivalent junctions formed between dissimilar metals. The junction placed at the site of intended measurement is called the *measurement* junction, while the other (single or equivalent) junction is called the *reference* junction.
- Two thermocouple junctions can be connected in opposition to each other to generate a voltage signal proportional to differential temperature between the two junctions. A collection of junctions so connected for the purpose of generating electricity is called a *thermopile*.
- When electrons flow through the junctions of a thermopile, heat energy is transferred from one set of junctions to the other. This is known as the *Peltier Effect*.
- Multiple thermocouple junctions can be connected in parallel with each other to generate a voltage signal representing the average temperature between the junctions. “Swamping” resistors may be connected in series with each thermocouple to help maintain equality between the junctions, so the resultant voltage will be more representative of a true average temperature.
- It is imperative that current in a thermocouple circuit be kept as low as possible for good measurement accuracy. Also, all related wire connections should be clean and tight. Mere millivolts of drop at any place in the circuit will cause substantial measurement errors.

This page titled 9.5: Thermocouples is shared under a GNU Free Documentation License 1.3 license and was authored, remixed, and/or curated by Tony R. Kuphaldt (All About Circuits) via source content that was edited to the style and standards of the LibreTexts platform.

9.6: pH Measurement

A very important measurement in many liquid chemical processes (industrial, pharmaceutical, manufacturing, food production, etc.) is that of pH: the measurement of hydrogen ion concentration in a liquid solution. A solution with a low pH value is called an "acid," while one with a high pH is called a "caustic." The common pH scale extends from 0 (strong acid) to 14 (strong caustic), with 7 in the middle representing pure water (neutral):

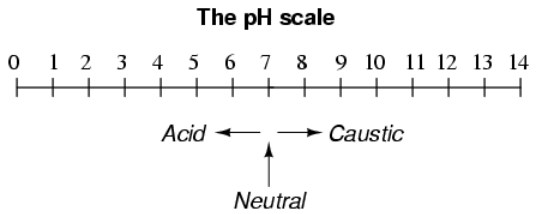

pH is defined as follows: the lower-case letter "p" in pH stands for the negative common (base ten) logarithm, while the upper-case letter "H" stands for the element hydrogen. Thus, pH is a logarithmic measurement of the number of moles of hydrogen ions (H^+) per liter of solution. Incidentally, the "p" prefix is also used with other types of chemical measurements where a logarithmic scale is desired, pCO2 (Carbon Dioxide) and pO2 (Oxygen) being two such examples.

The logarithmic pH scale works like this: a solution with 10^{-12} moles of H^+ ions per liter has a pH of 12; a solution with 10^{-3} moles of H^+ ions per liter has a pH of 3. While very uncommon, there is such a thing as an acid with a pH measurement below 0 and a caustic with a pH above 14. Such solutions, understandably, are quite concentrated and *extremely* reactive.

While pH can be measured by color changes in certain chemical powders (the "litmus strip" being a familiar example from high school chemistry classes), continuous process monitoring and control of pH requires a more sophisticated approach. The most common approach is the use of a specially-prepared electrode designed to allow hydrogen ions in the solution to migrate through a selective barrier, producing a measurable potential (voltage) difference proportional to the solution's pH:

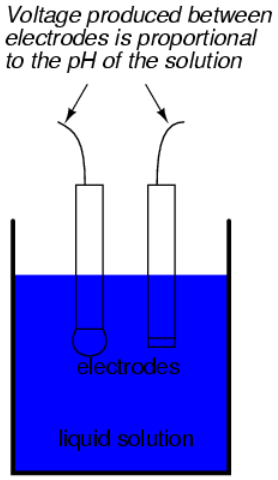

The design and operational theory of pH electrodes is a very complex subject, explored only briefly here. What is important to understand is that these two electrodes generate a voltage directly proportional to the pH of the solution. At a pH of 7 (neutral), the electrodes will produce 0 volts between them. At a low pH (acid) a voltage will be developed of one polarity, and at a high pH (caustic) a voltage will be developed of the opposite polarity.

An unfortunate design constraint of pH electrodes is that one of them (called the *measurement* electrode) must be constructed of special glass to create the ion-selective barrier needed to screen out hydrogen ions from all the other ions floating around in the solution. This glass is chemically doped with lithium ions, which is what makes it react electrochemically to hydrogen ions. Of course, glass is not exactly what you would call a "conductor;" rather, it is an extremely good insulator. This presents a major problem if our intent is to measure voltage between the two electrodes. The circuit path from one electrode contact, through the

glass barrier, through the solution, to the other electrode, and back through the other electrode's contact, is one of *extremely* high resistance.

The other electrode (called the *reference* electrode) is made from a chemical solution of neutral (7) pH buffer solution (usually potassium chloride) allowed to exchange ions with the process solution through a porous separator, forming a relatively low resistance connection to the test liquid. At first, one might be inclined to ask: why not just dip a metal wire into the solution to get an electrical connection to the liquid? The reason this will not work is because metals tend to be highly reactive in ionic solutions and can produce a significant voltage across the interface of metal-to-liquid contact. The use of a wet chemical interface with the measured solution is necessary to avoid creating such a voltage, which of course would be falsely interpreted by any measuring device as being indicative of pH.

Here is an illustration of the measurement electrode's construction. Note the thin, lithium-doped glass membrane across which the pH voltage is generated:

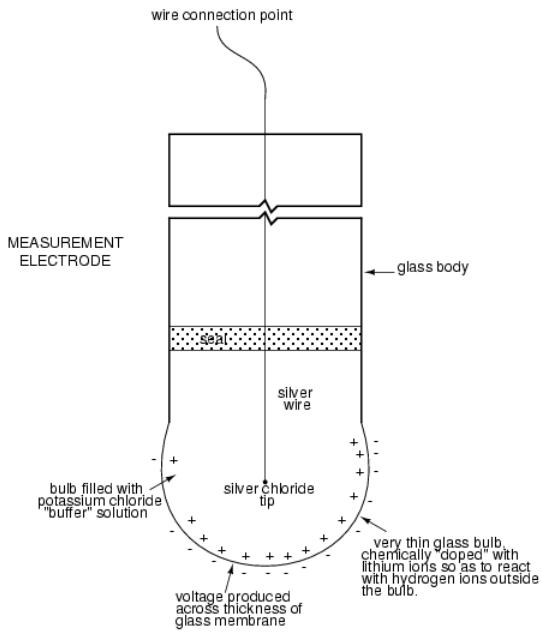

Here is an illustration of the reference electrode's construction. The porous junction shown at the bottom of the electrode is where the potassium chloride buffer and process liquid interface with each other:

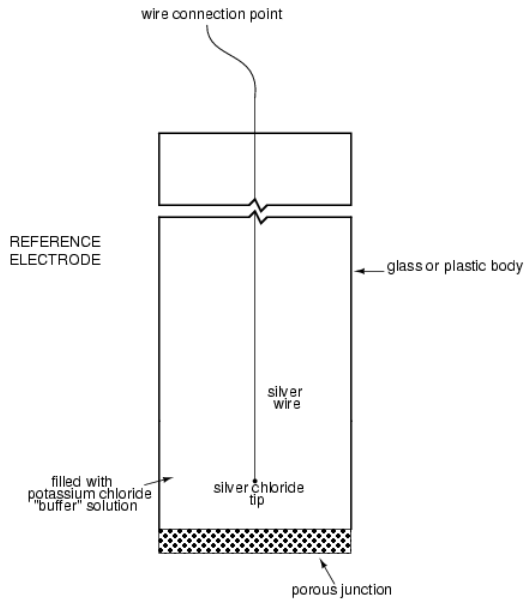

The measurement electrode's purpose is to generate the voltage used to measure the solution's pH. This voltage appears across the thickness of the glass, placing the silver wire on one side of the voltage and the liquid solution on the other. The reference electrode's purpose is to provide the stable, zero-voltage connection to the liquid solution so that a complete circuit can be made to measure the glass electrode's voltage. While the reference electrode's connection to the test liquid may only be a few kilo-ohms, the glass electrode's resistance may range from ten to nine hundred mega-ohms, depending on electrode design! Being that any current in this circuit must travel through *both* electrodes' resistances (and the resistance presented by the test liquid itself), these resistances are in series with each other and therefore add to make an even greater total.

An ordinary analog or even digital voltmeter has much too low of an internal resistance to measure voltage in such a high-resistance circuit. The equivalent circuit diagram of a typical pH probe circuit illustrates the problem:

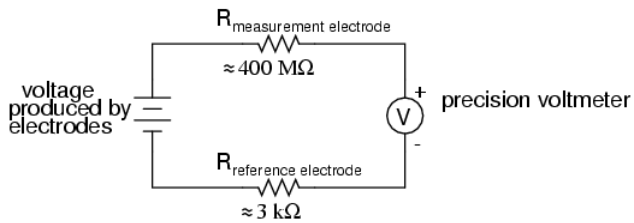

Even a very small circuit current traveling through the high resistances of each component in the circuit (especially the measurement electrode's glass membrane), will produce relatively substantial voltage drops across those resistances, seriously reducing the voltage seen by the meter. Making matters worse is the fact that the voltage differential generated by the measurement electrode is very small, in the millivolt range (ideally 59.16 millivolts per pH unit at room temperature). The meter used for this task must be very sensitive and have an extremely high input resistance.

The most common solution to this measurement problem is to use an amplified meter with an extremely high internal resistance to measure the electrode voltage, so as to draw as little current through the circuit as possible. With modern semiconductor components, a voltmeter with an input resistance of up to 10^{17} Ω can be built with little difficulty. Another approach, seldom seen in contemporary use, is to use a potentiometric "null-balance" voltage measurement setup to measure this voltage without drawing *any*current from the circuit under test. If a technician desired to check the voltage output between a pair of pH electrodes, this would probably be the most practical means of doing so using only standard benchtop metering equipment:

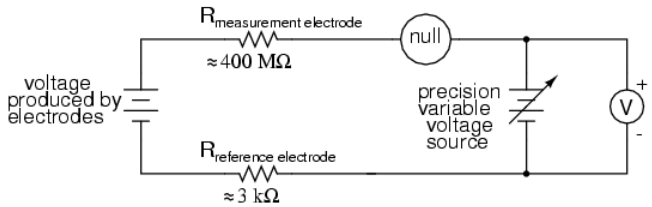

As usual, the precision voltage supply would be adjusted by the technician until the null detector registered zero, then the voltmeter connected in parallel with the supply would be viewed to obtain a voltage reading. With the detector "nulled" (registering exactly zero), there should be zero current in the pH electrode circuit, and therefore no voltage dropped across the resistances of either electrode, giving the real electrode voltage at the voltmeter terminals.

Wiring requirements for pH electrodes tend to be even more severe than thermocouple wiring, demanding very clean connections and short distances of wire (10 yards or less, even with gold-plated contacts and shielded cable) for accurate and reliable measurement. As with thermocouples, however, the disadvantages of electrode pH measurement are offset by the advantages: good accuracy and relative technical simplicity.

Few instrumentation technologies inspire the awe and mystique commanded by pH measurement, because it is so widely misunderstood and difficult to troubleshoot. Without elaborating on the exact chemistry of pH measurement, a few words of wisdom can be given here about pH measurement systems:

- All pH electrodes have a finite life, and that lifespan depends greatly on the type and severity of service. In some applications, a pH electrode life of one month may be considered long, and in other applications the same electrode(s) may be expected to last for over a year.

- Because the glass (measurement) electrode is responsible for generating the pH-proportional voltage, it is the one to be considered suspect if the measurement system fails to generate sufficient voltage change for a given change in pH (approximately 59 millivolts per pH unit), or fails to respond quickly enough to a fast change in test liquid pH.
- If a pH measurement system "drifts," creating offset errors, the problem likely lies with the reference electrode, which is supposed to provide a zero-voltage connection with the measured solution.
- Because pH measurement is a logarithmic representation of ion concentration, there is an incredible range of process conditions represented in the seemingly simple 0-14 pH scale. Also, due to the nonlinear nature of the logarithmic scale, a change of 1 pH at the top end (say, from 12 to 13 pH) does not represent the same quantity of chemical activity change as a change of 1 pH at the bottom end (say, from 2 to 3 pH). Control system engineers and technicians must be aware of this dynamic if there is to be any hope of *controlling* process pH at a stable value.
- The following conditions are hazardous to measurement (glass) electrodes: high temperatures, extreme pH levels (either acidic or alkaline), high ionic concentration in the liquid, abrasion, hydrofluoric acid in the liquid (HF acid dissolves glass!), and any kind of material coating on the surface of the glass.
- Temperature changes in the measured liquid affect both the response of the measurement electrode to a given pH level (ideally at 59 mV per pH unit), and the actual pH of the liquid. Temperature measurement devices can be inserted into the liquid, and the signals from those devices used to compensate for the effect of temperature on pH measurement, but this will only compensate for the measurement electrode's mV/pH response, not the actual pH change of the process liquid!

Advances are still being made in the field of pH measurement, some of which hold great promise for overcoming traditional limitations of pH electrodes. One such technology uses a device called a *field-effect transistor* to electrostatically measure the voltage produced by an ion-permeable membrane rather than measure the voltage with an actual voltmeter circuit. While this technology harbors limitations of its own, it is at least a pioneering concept, and may prove more practical at a later date.

Review

- pH is a representation of hydrogen ion activity in a liquid. It is the negative logarithm of the amount of hydrogen ions (in moles) per liter of liquid. Thus: 10^{-11} moles of hydrogen ions in 1 liter of liquid = 11 pH. $10^{-5.3}$ moles of hydrogen ions in 1 liter of liquid = 5.3 pH.
- The basic pH scale extends from 0 (strong acid) to 7 (neutral, pure water) to 14 (strong caustic). Chemical solutions with pH levels below zero and above 14 are possible, but rare.
- pH can be measured by measuring the voltage produced between two special electrodes immersed in the liquid solution.
- One electrode, made of a special glass, is called the *measurement* electrode. It's job it to generate a small voltage proportional to pH (ideally 59.16 mV per pH unit).
- The other electrode (called the *reference* electrode) uses a porous junction between the measured liquid and a stable, neutral pH buffer solution (usually potassium chloride) to create a zero-voltage electrical connection to the liquid. This provides a point of continuity for a complete circuit so that the voltage produced across the thickness of the glass in the measurement electrode can be measured by an external voltmeter.
- The extremely high resistance of the measurement electrode's glass membrane mandates the use of a voltmeter with extremely high internal resistance, or a null-balance voltmeter, to measure the voltage.

This page titled 9.6: pH Measurement is shared under a GNU Free Documentation License 1.3 license and was authored, remixed, and/or curated by Tony R. Kuphaldt (All About Circuits) via source content that was edited to the style and standards of the LibreTexts platform.

9.7: Strain Gauges

What is a Strain Gauge?

Such a device is called a *strain gauge*. Strain gauges are frequently used in mechanical engineering research and development to measure the stresses generated by machinery. Aircraft component testing is one area of application, tiny strain-gauge strips glued to structural members, linkages, and any other critical component of an airframe to measure stress. Most strain gauges are smaller than a postage stamp, and they look something like this:

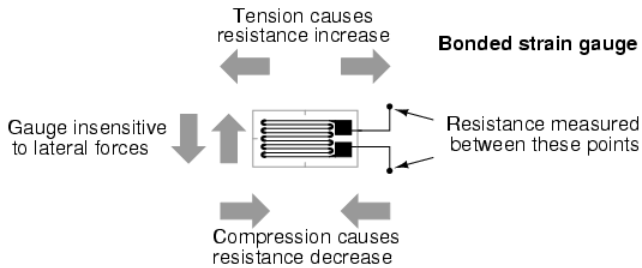

A strain gauge's conductors are very thin: if made of round wire, about 1/1000 inch in diameter. Alternatively, strain gauge conductors may be thin strips of metallic film deposited on a nonconducting substrate material called the *carrier*. The latter form of strain gauge is represented in the previous illustration. The name "bonded gauge" is given to strain gauges that are glued to a larger structure under stress (called the *test specimen*). The task of bonding strain gauges to test specimens may appear to be very simple, but it is not. "Gauging" is a craft in its own right, absolutely essential for obtaining accurate, stable strain measurements. It is also possible to use an unmounted gauge wire stretched between two mechanical points to measure tension, but this technique has its limitations.

Strain Gauge Resistance

Typical strain gauge resistances range from 30 Ω to 3 kΩ (unstressed). This resistance may change only a fraction of a percent for the full force range of the gauge, given the limitations imposed by the elastic limits of the gauge material and of the test specimen. Forces great enough to induce greater resistance changes would permanently deform the test specimen and/or the gauge conductors themselves, thus ruining the gauge as a measurement device. Thus, in order to use the strain gauge as a practical instrument, we must measure extremely small changes in resistance with high accuracy.

Such demanding precision calls for a bridge measurement circuit.

Bridge Measurement Circuit

Unlike the Wheatstone bridge shown in the last chapter using a null-balance detector and a human operator to maintain a state of balance, a strain gauge bridge circuit indicates measured strain by the degree of *imbalance*, and uses a precision voltmeter in the center of the bridge to provide an accurate measurement of that imbalance:

Quarter-bridge strain gauge circuit

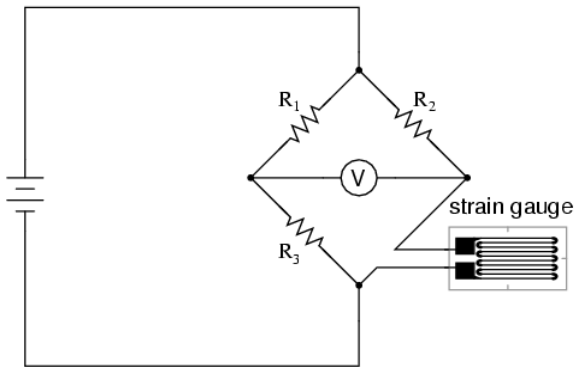

Typically, the rheostat arm of the bridge (R_2 in the diagram) is set at a value equal to the strain gauge resistance with no force applied. The two ratio arms of the bridge (R_1 and R_3) are set equal to each other. Thus, with no force applied to the strain gauge, the bridge will be symmetrically balanced and the voltmeter will indicate zero volts, representing zero force on the strain gauge. As the strain gauge is either compressed or tensed, its resistance will decrease or increase, respectively, thus unbalancing the bridge and producing an indication at the voltmeter. This arrangement, with a single element of the bridge changing resistance in response to the measured variable (mechanical force), is known as a *quarter-bridge* circuit.

As the distance between the strain gauge and the three other resistances in the bridge circuit may be substantial, wire resistance has a significant impact on the operation of the circuit. To illustrate the effects of wire resistance, I'll show the same schematic diagram, but add two resistor symbols in series with the strain gauge to represent the wires:

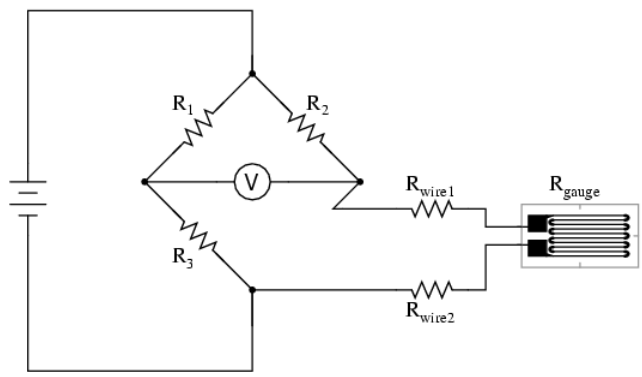

Wire Resistances

The strain gauge's resistance (R_{gauge}) is not the only resistance being measured: the wire resistances $R_{wire1}$and R_{wire2}, being in series with R_{gauge}, also contribute to the resistance of the lower half of the rheostat arm of the bridge, and consequently contribute to the voltmeter's indication. This, of course, will be falsely interpreted by the meter as physical strain on the gauge.

While this effect cannot be completely eliminated in this configuration, it can be minimized with the addition of a third wire, connecting the right side of the voltmeter directly to the upper wire of the strain gauge:

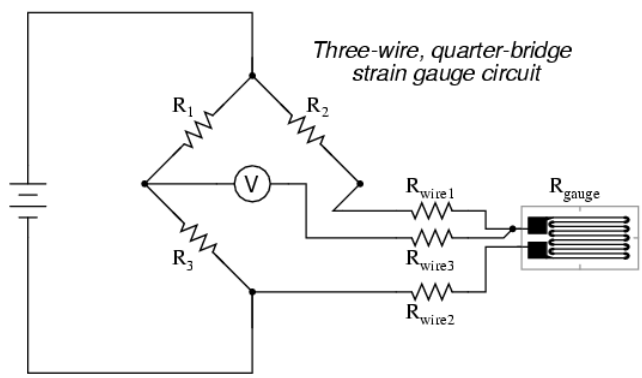

Because the third wire carries practically no current (due to the voltmeter's extremely high internal resistance), its resistance will not drop any substantial amount of voltage. Notice how the resistance of the top wire (R_{wire1}) has been "bypassed" now that the voltmeter connects directly to the top terminal of the strain gauge, leaving only the lower wire's resistance (R_{wire2}) to contribute any stray resistance in series with the gauge. Not a perfect solution, of course, but twice as good as the last circuit!

There is a way, however, to reduce wire resistance error far beyond the method just described, and also help mitigate another kind of measurement error due to temperature.

Resistance Change and Temperature

An unfortunate characteristic of strain gauges is that of resistance change with changes in temperature. This is a property common to all conductors, some more than others. Thus, our quarter-bridge circuit as shown (either with two or with three wires connecting

the gauge to the bridge) works as a thermometer just as well as it does a strain indicator. If all we want to do is measure strain, this is not good. We can transcend this problem, however, by using a "dummy" strain gauge in place of R_2, so that *both* elements of the rheostat arm will change resistance in the same proportion when temperature changes, thus canceling the effects of temperature change:

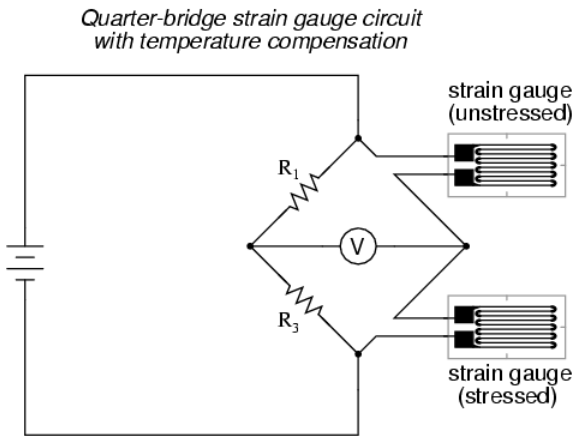

Resistors R_1 and R_3 are of equal resistance value, and the strain gauges are identical to one another. With no applied force, the bridge should be in a perfectly balanced condition and the voltmeter should register 0 volts. Both gauges are bonded to the same test specimen, but only one is placed in a position and orientation so as to be exposed to physical strain (the *active* gauge). The other gauge is isolated from all mechanical stress, and acts merely as a temperature compensation device (the *"dummy"* gauge). If the temperature changes, both gauge resistances will change by the same percentage, and the bridge's state of balance will remain unaffected. Only a differential resistance (difference of resistance between the two strain gauges) produced by physical force on the test specimen can alter the balance of the bridge.

Wire resistance doesn't impact the accuracy of the circuit as much as before, because the wires connecting both strain gauges to the bridge are approximately equal length. Therefore, the upper and lower sections of the bridge's rheostat arm contain approximately the same amount of stray resistance, and their effects tend to cancel:

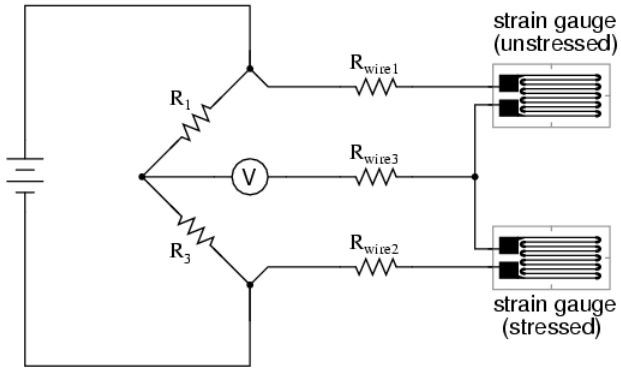

Quarter-Bridge and Half Bridge Circuits

Even though there are now two strain gauges in the bridge circuit, only one is responsive to mechanical strain, and thus we would still refer to this arrangement as a *quarter-bridge*. However, if we were to take the upper strain gauge and position it so that it is exposed to the opposite force as the lower gauge (i.e. when the upper gauge is compressed, the lower gauge will be stretched, and vice versa), we will have *both* gauges responding to strain, and the bridge will be more responsive to applied force. This utilization is known as a *half-bridge*. Since both strain gauges will either increase or decrease resistance by the same proportion in response to changes in temperature, the effects of temperature change remain canceled and the circuit will suffer minimal temperature-induced measurement error:

Half-bridge strain gauge circuit

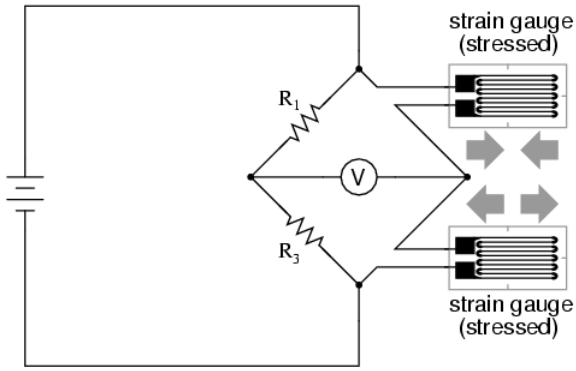

An example of how a pair of strain gauges may be bonded to a test specimen so as to yield this effect is illustrated here:

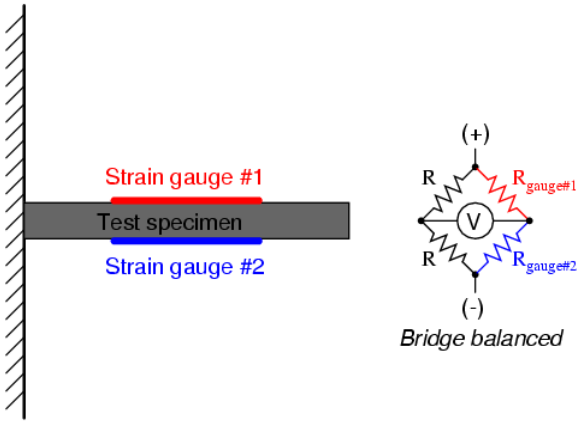

With no force applied to the test specimen, both strain gauges have equal resistance and the bridge circuit is balanced. However, when a downward force is applied to the free end of the specimen, it will bend downward, stretching gauge #1 and compressing gauge #2 at the same time:

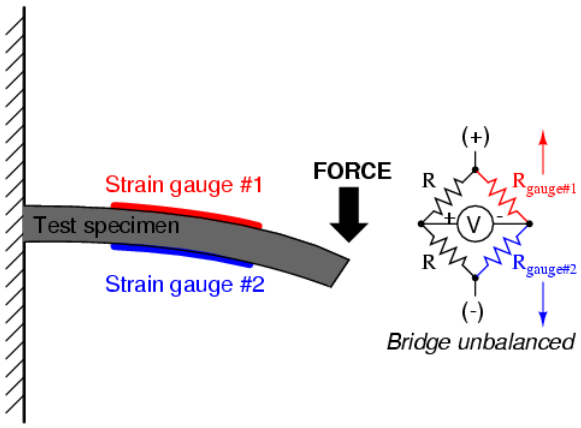

Full-Bridge Circuits

In applications where such complementary pairs of strain gauges can be bonded to the test specimen, it may be advantageous to make all four elements of the bridge "active" for even greater sensitivity. This is called a *full-bridge* circuit:

Full-bridge strain gauge circuit

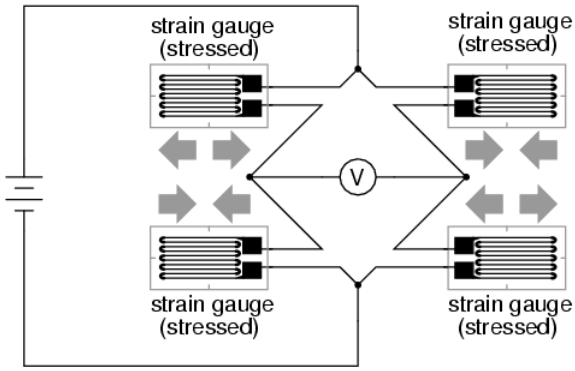

Both half-bridge and full-bridge configurations grant greater sensitivity over the quarter-bridge circuit, but often it is not possible to bond complementary pairs of strain gauges to the test specimen. Thus, the quarter-bridge circuit is frequently used in strain measurement systems.

When possible, the full-bridge configuration is the best to use. This is true not only because it is more sensitive than the others, but because it is *linear* while the others are not. Quarter-bridge and half-bridge circuits provide an output (imbalance) signal that is only *approximately* proportional to applied strain gauge force. Linearity, or proportionality, of these bridge circuits is best when the amount of resistance change due to applied force is very small compared to the nominal resistance of the gauge(s). With a full-bridge, however, the output voltage is directly proportional to applied force, with no approximation (provided that the change in resistance caused by the applied force is equal for all four strain gauges!).

Unlike the Wheatstone and Kelvin bridges, which provide measurement at a condition of perfect balance and therefore function irrespective of source voltage, the amount of source (or "excitation") voltage matters in an unbalanced bridge like this. Therefore, strain gauge bridges are rated in millivolts of imbalance produced *per* volt of excitation, *per* unit measure of force. A typical example for a strain gauge of the type used for measuring force in industrial environments is 15 mV/V at 1000 pounds. That is, at exactly 1000 pounds applied force (either compressive or tensile), the bridge will be unbalanced by 15 millivolts for every volt of excitation voltage. Again, such a figure is precise if the bridge circuit is full-active (four active strain gauges, one in each arm of the bridge), but only approximate for half-bridge and quarter-bridge arrangements.

Strain gauges may be purchased as complete units, with both strain gauge elements and bridge resistors in one housing, sealed and encapsulated for protection from the elements, and equipped with mechanical fastening points for attachment to a machine or structure. Such a package is typically called a *load cell*.

Like many of the other topics addressed in this chapter, strain gauge systems can become quite complex, and a full dissertation on strain gauges would be beyond the scope of this book.

Review

- A strain gauge is a thin strip of metal designed to measure mechanical load by changing resistance when stressed (stretched or compressed within its elastic limit).
- Strain gauge resistance changes are typically measured in a bridge circuit, to allow for precise measurement of the small resistance changes, and to provide compensation for resistance variations due to temperature.

This page titled 9.7: Strain Gauges is shared under a GNU Free Documentation License 1.3 license and was authored, remixed, and/or curated by Tony R. Kuphaldt (All About Circuits) via source content that was edited to the style and standards of the LibreTexts platform.

CHAPTER OVERVIEW

10: DC Network Analysis

10.1: What is Network Analysis?
10.2: Branch Current Method
10.3: Mesh Current Method and Analysis
10.4: Node Voltage Method
10.5: Introduction to Network Theorems
10.6: Millman's Theorem
10.7: Superposition Theorem
10.8: Thevenin's Theorem
10.9: Norton's Theorem
10.10: Thevenin-Norton Equivalencies
10.11: Millman's Theorem Revisited
10.12: Maximum Power Transfer Theorem
10.13: Δ-Y and Y-Δ Conversions

This page titled 10: DC Network Analysis is shared under a GNU Free Documentation License 1.3 license and was authored, remixed, and/or curated by Tony R. Kuphaldt (All About Circuits) via source content that was edited to the style and standards of the LibreTexts platform.

10.1: What is Network Analysis?

To illustrate how even a simple circuit can defy analysis by breakdown into series and parallel portions, take start with this series-parallel circuit:

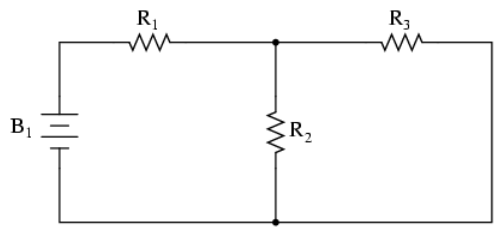

To analyze the above circuit, one would first find the equivalent of R_2 and R_3 in parallel, then add R_1 in series to arrive at a total resistance. Then, taking the voltage of battery B_1 with that total circuit resistance, the total current could be calculated through the use of Ohm's Law (I=E/R), then that current figure used to calculate voltage drops in the circuit. All in all, a fairly simple procedure.

However, the addition of just one more battery could change all of that:

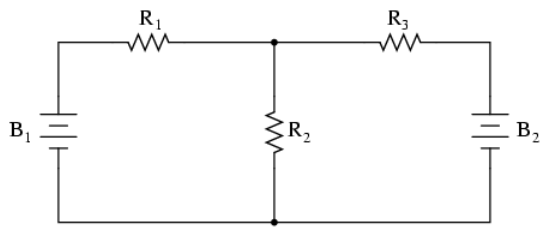

Resistors R_2 and R_3 are no longer in parallel with each other, because B_2 has been inserted into R_3's branch of the circuit. Upon closer inspection, it appears there are *no* two resistors in this circuit directly in series or parallel with each other. This is the crux of our problem: in series-parallel analysis, we started off by identifying sets of resistors that *were* directly in series or parallel with each other, reducing them to single equivalent resistances. If there are no resistors in a simple series or parallel configuration with each other, then what can we do?

It should be clear that this seemingly simple circuit, with only three resistors, is impossible to reduce as a combination of simple series and simple parallel sections: it is something different altogether. However, this is not the only type of circuit defying series/parallel analysis:

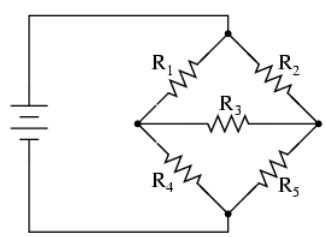

Here we have a bridge circuit, and for the sake of example we will suppose that it is *not* balanced (ratio R_1/R_4 not equal to ratio R_2/R_5). If it were balanced, there would be zero current through R_3, and it could be approached as a series/parallel combination circuit (R_1—R_4 // R_2—R_5). However, any current through R_3makes a series/parallel analysis impossible. R_1 is not in series with R_4 because there's another path for electrons to flow through R_3. Neither is R_2 in series with R_5 for the same reason. Likewise, R_1 is not in parallel with R_2 because R_3 is separating their bottom leads. Neither is R_4 in parallel with R_5. Aaarrggghhhh!

Although it might not be apparent at this point, the heart of the problem is the existence of multiple unknown quantities. At least in a series/parallel combination circuit, there was a way to find total resistance and total voltage, leaving total current as a single unknown value to calculate (and then that current was used to satisfy previously unknown variables in the reduction process until

the entire circuit could be analyzed). With these problems, more than one parameter (variable) is unknown at the most basic level of circuit simplification.

With the two-battery circuit, there is no way to arrive at a value for "total resistance," because there are *two*sources of power to provide voltage and current (we would need *two* "total" resistances in order to proceed with any Ohm's Law calculations). With the unbalanced bridge circuit, there is such a thing as total resistance across the one battery (paving the way for a calculation of total current), but that total current immediately splits up into unknown proportions at each end of the bridge, so no further Ohm's Law calculations for voltage (E=IR) can be carried out.

So what can we do when we're faced with multiple unknowns in a circuit? The answer is initially found in a mathematical process known as *simultaneous equations* or *systems of equations*, whereby multiple unknown variables are solved by relating them to each other in multiple equations. In a scenario with only one unknown (such as every Ohm's Law equation we've dealt with thus far), there only needs to be a single equation to solve for the single unknown:

$$\mathbf{E} = \mathrm{I}\,\mathrm{R} \quad (\mathbf{E}\text{ is unknown; I and R are known})$$

$$\ldots or \ldots$$

$$\mathbf{I} = \frac{\mathrm{E}}{\mathrm{R}} \quad (\mathbf{I}\text{ is unknown; E and R are known})$$

$$\ldots or \ldots$$

$$\mathbf{R} = \frac{\mathrm{E}}{\mathrm{I}} \quad (\mathbf{R}\text{ is unknown; E and I are known})$$

However, when we're solving for multiple unknown values, we need to have the same number of equations as we have unknowns in order to reach a solution. There are several methods of solving simultaneous equations, all rather intimidating and all too complex for explanation in this chapter. However, many scientific and programmable calculators are able to solve for simultaneous unknowns, so it is recommended to use such a calculator when first learning how to analyze these circuits.

This is not as scary as it may seem at first. Trust me!

Later on we'll see that some clever people have found tricks to avoid having to use simultaneous equations on these types of circuits. We call these tricks *network theorems*, and we will explore a few later in this chapter.

Review

- Some circuit configurations ("networks") cannot be solved by reduction according to series/parallel circuit rules, due to multiple unknown values.
- Mathematical techniques to solve for multiple unknowns (called "simultaneous equations" or "systems") can be applied to basic Laws of circuits to solve networks.

This page titled 10.1: What is Network Analysis? is shared under a GNU Free Documentation License 1.3 license and was authored, remixed, and/or curated by Tony R. Kuphaldt (All About Circuits) via source content that was edited to the style and standards of the LibreTexts platform.

10.2: Branch Current Method

Let's use this circuit to illustrate the method:

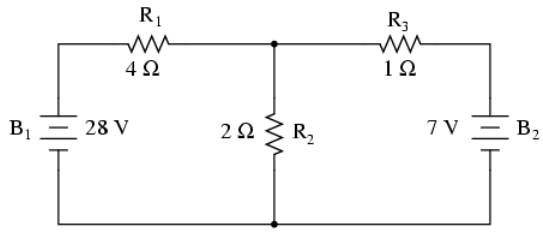

The first step is to choose a node (junction of wires) in the circuit to use as a point of reference for our unknown currents. I'll choose the node joining the right of R_1, the top of R_2, and the left of R_3.

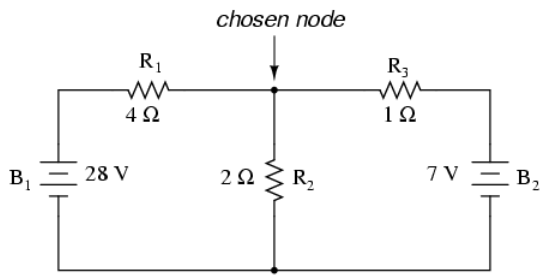

At this node, guess which directions the three wires' currents take, labeling the three currents as I_1, I_2, and I_3, respectively. Bear in mind that these directions of current are speculative at this point. Fortunately, if it turns out that any of our guesses were wrong, we will know when we mathematically solve for the currents (any "wrong" current directions will show up as negative numbers in our solution).

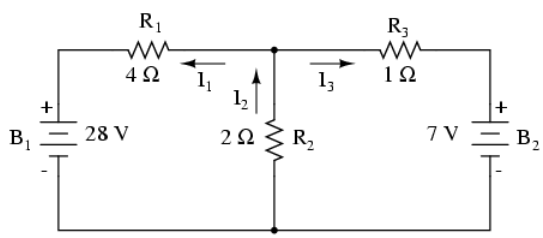

Kirchhoff's Current Law (KCL) tells us that the algebraic sum of currents entering and exiting a node must equal zero, so we can relate these three currents (I_1, I_2, and I_3) to each other in a single equation. For the sake of convention, I'll denote any current *entering* the node as positive in sign, and any current *exiting* the node as negative in sign:

Kirchhoff's Current Law (KCL)
applied to currents at node

$$-I_1 + I_2 - I_3 = 0$$

The next step is to label all voltage drop polarities across resistors according to the assumed directions of the currents. Remember that the "upstream" end of a resistor will always be negative, and the "downstream" end of a resistor positive with respect to each other, since electrons are negatively charged:

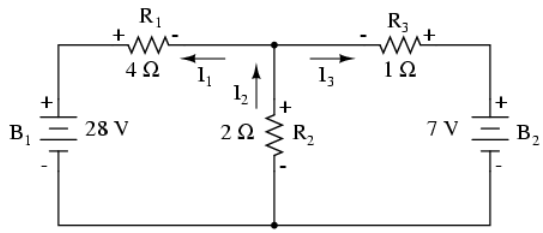

The battery polarities, of course, remain as they were according to their symbology (short end negative, long end positive). It is OK if the polarity of a resistor's voltage drop doesn't match with the polarity of the nearest battery, so long as the resistor voltage polarity is correctly based on the assumed direction of current through it. In some cases we may discover that current will be forced *backwards* through a battery, causing this very effect. The important thing to remember here is to base all your resistor polarities and subsequent calculations on the directions of current(s) initially assumed. As stated earlier, if your assumption happens to be incorrect, it will be apparent once the equations have been solved (by means of a negative solution). The magnitude of the solution, however, will still be correct.

Kirchhoff's Voltage Law (KVL) tells us that the algebraic sum of all voltages in a loop must equal zero, so we can create more equations with current terms (I_1, I_2, and I_3) for our simultaneous equations. To obtain a KVL equation, we must tally voltage drops in a loop of the circuit, as though we were measuring with a real voltmeter. I'll choose to trace the left loop of this circuit first, starting from the upper-left corner and moving counter-clockwise (the choice of starting points and directions is arbitrary). The result will look like this:

Voltmeter indicates: **-28 V**

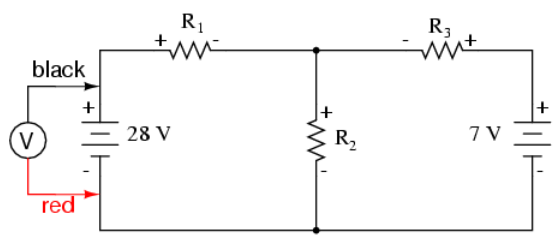

Voltmeter indicates: **0 V**

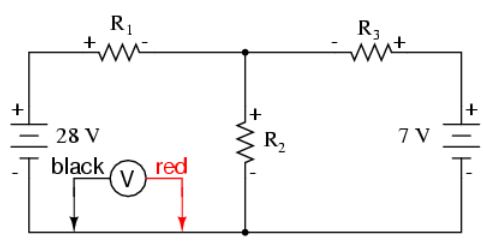

Voltmeter indicates: **a positive voltage**

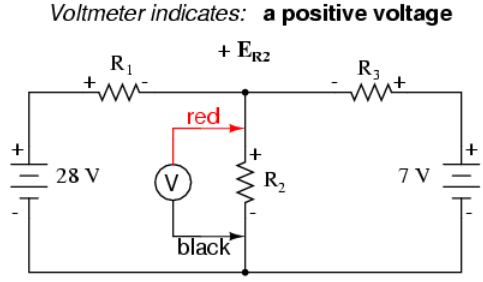

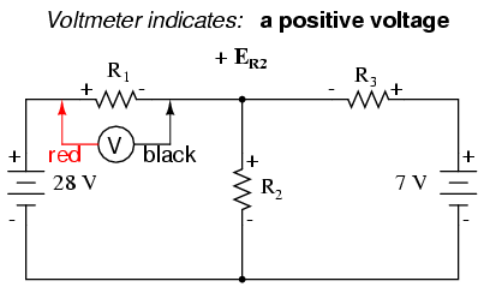

Having completed our trace of the left loop, we add these voltage indications together for a sum of zero:

Kirchhoff's Voltage Law (KVL)
applied to voltage drops in left loop

$$-28 + 0 + E_{R2} + E_{R1} = 0$$

Of course, we don't yet know what the voltage is across R_1 or R_2, so we can't insert those values into the equation as numerical figures at this point. However, we *do* know that all three voltages must algebraically add to zero, so the equation is true. We can go a step further and express the unknown voltages as the product of the corresponding unknown currents (I_1 and I_2) and their respective resistors, following Ohm's Law (E=IR), as well as eliminate the 0 term:

$$-28 + E_{R2} + E_{R1} = 0$$

Ohm's Law: $E = IR$

. . . Substituting IR for E in the KVL equation . . .

$$-28 + I_2R_2 + I_1R_1 = 0$$

Since we know what the values of all the resistors are in ohms, we can just substitute those figures into the equation to simplify things a bit:

$$-28 + 2I_2 + 4I_1 = 0$$

You might be wondering why we went through all the trouble of manipulating this equation from its initial form ($-28 + E_{R2} + E_{R1}$). After all, the last two terms are still unknown, so what advantage is there to expressing them in terms of unknown voltages or as unknown currents (multiplied by resistances)? The purpose in doing this is to get the KVL equation expressed using the *same unknown variables* as the KCL equation, for this is a necessary requirement for any simultaneous equation solution method. To solve for three unknown currents (I_1, I_2, and I_3), we must have three equations relating these three *currents* (not *voltages*!) together.

Applying the same steps to the right loop of the circuit (starting at the chosen node and moving counter-clockwise), we get another KVL equation:

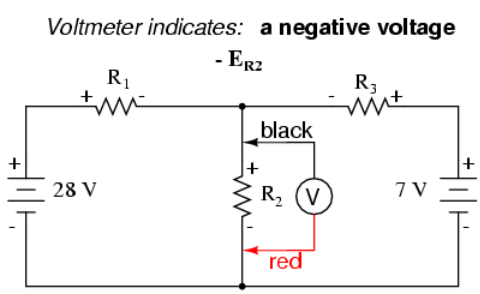

Voltmeter indicates: **0 V**

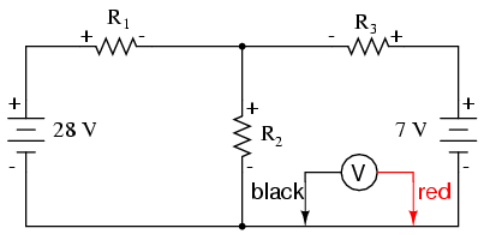

Voltmeter indicates: **+ 7 V**

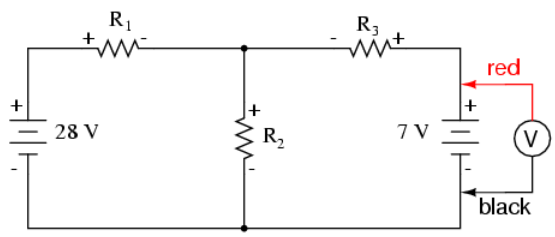

Voltmeter indicates: **a negative voltage**

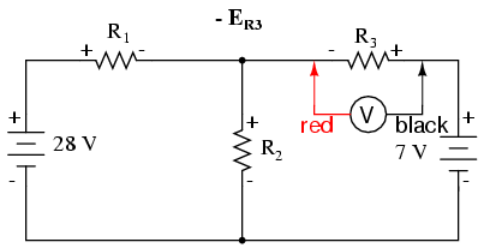

Kirchhoff's Voltage Law (KVL)
applied to voltage drops in right loop

$$- E_{R2} + 0 + 7 - E_{R3} = 0$$

Knowing now that the voltage across each resistor can be and *should be* expressed as the product of the corresponding current and the (known) resistance of each resistor, we can re-write the equation as such:

$$- 2I_2 + 7 - 1I_3 = 0$$

Now we have a mathematical system of three equations (one KCL equation and two KVL equations) and three unknowns:

$$- I_1 + I_2 - I_3 = 0 \qquad \textit{Kirchhoff's Current Law}$$

$$- 28 + 2I_2 + 4I_1 = 0 \qquad \textit{Kirchhoff's Voltage Law}$$

$$- 2I_2 + 7 - 1I_3 = 0 \qquad \textit{Kirchhoff's Voltage Law}$$

For some methods of solution (especially any method involving a calculator), it is helpful to express each unknown term in each equation, with any constant value to the right of the equal sign, and with any "unity" terms expressed with an explicit coefficient of 1. Re-writing the equations again, we have:

$$- 1I_1 + 1I_2 - 1I_3 = 0 \qquad \textit{Kirchhoff's Current Law}$$

$$4I_1 + 2I_2 + 0I_3 = 28 \qquad \textit{Kirchhoff's Voltage Law}$$

$$0I_1 - 2I_2 - 1I_3 = -7 \qquad \textit{Kirchhoff's Voltage Law}$$

All three variables represented
in all three equations

Using whatever solution techniques are available to us, we should arrive at a solution for the three unknown current values:

Solutions:

$I_1 = 5$ A

$I_2 = 4$ A

$I_3 = -1$ A

So, I_1 is 5 amps, I_2 is 4 amps, and I_3 is a negative 1 amp. But what does "negative" current mean? In this case, it means that our *assumed* direction for I_3 was opposite of its *real* direction. Going back to our original circuit, we can re-draw the current arrow for I_3 (and re-draw the polarity of R_3's voltage drop to match):

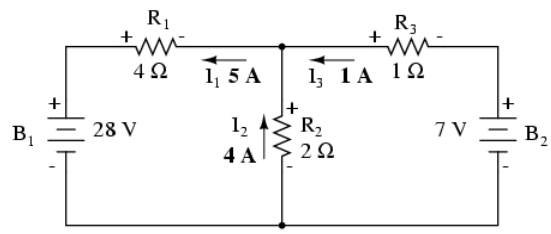

Notice how current is being pushed backwards through battery 2 (electrons flowing "up") due to the higher voltage of battery 1 (whose current is pointed "down" as it normally would)! Despite the fact that battery B_2's polarity is trying to push electrons down in that branch of the circuit, electrons are being forced backwards through it due to the superior voltage of battery B_1. Does this mean that the stronger battery will always "win" and the weaker battery always get current forced through it backwards? No! It actually depends on both the batteries' relative voltages *and* the resistor values in the circuit. The only sure way to determine what's going on is to take the time to mathematically analyze the network.

Now that we know the magnitude of all currents in this circuit, we can calculate voltage drops across all resistors with Ohm's Law (E=IR):

$$E_{R1} = I_1R_1 = (5\text{ A})(4\ \Omega) = 20\text{ V}$$

$$E_{R2} = I_2R_2 = (4\text{ A})(2\ \Omega) = 8\text{ V}$$

$$E_{R3} = I_3R_3 = (1\text{ A})(1\ \Omega) = 1\text{ V}$$

Let us now analyze this network using SPICE to verify our voltage figures. We could analyze current as well with SPICE, but since that requires the insertion of extra components into the circuit, and because we know that if the voltages are all the same and all the resistances are the same, the currents *must* all be the same, I'll opt for the less complex analysis. Here's a re-drawing of our circuit, complete with node numbers for SPICE to reference:

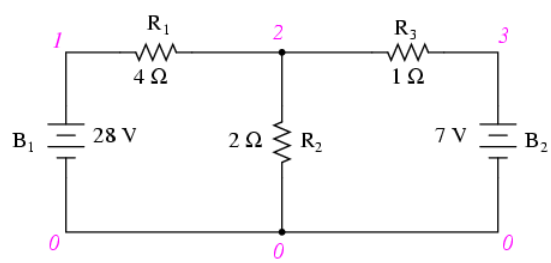

```
network analysis example
v1 1 0
v2 3 0 dc 7
r1 1 2 4
r2 2 0 2
r3 2 3 1
.dc v1 28 28 1
.print dc v(1,2) v(2,0) v(2,3)
.end
v1            v(1,2)      v(2)        v(2,3)
2.800E+01     2.000E+01   8.000E+00   1.000E+00
```

Sure enough, the voltage figures all turn out to be the same: 20 volts across R_1 (nodes 1 and 2), 8 volts across R_2 (nodes 2 and 0), and 1 volt across R_3 (nodes 2 and 3). Take note of the signs of all these voltage figures: they're all positive values! SPICE bases its polarities on the order in which nodes are listed, the first node being positive and the second node negative. For example, a figure of positive (+) 20 volts between nodes 1 and 2 means that node 1 is positive with respect to node 2. If the figure had come out negative in the SPICE analysis, we would have known that our actual polarity was "backwards" (node 1 negative with respect to node 2). Checking the node orders in the SPICE listing, we can see that the polarities all match what we determined through the Branch Current method of analysis.

Review

- Steps to follow for the "Branch Current" method of analysis:

(1) Choose a node and assume directions of currents.

(2) Write a KCL equation relating currents at the node.

(3) Label resistor voltage drop polarities based on assumed currents.

(4) Write KVL equations for each loop of the circuit, substituting the product IR for E in each resistor term of the equations.

(5) Solve for unknown branch currents (simultaneous equations).

(6) If any solution is negative, then the assumed direction of current for that solution is wrong!

(7) Solve for voltage drops across all resistors (E=IR).

This page titled 10.2: Branch Current Method is shared under a GNU Free Documentation License 1.3 license and was authored, remixed, and/or curated by Tony R. Kuphaldt (All About Circuits) via source content that was edited to the style and standards of the LibreTexts platform.

10.3: Mesh Current Method and Analysis

Mesh Current, Conventional Method

Let's see how this method works on the same example problem:

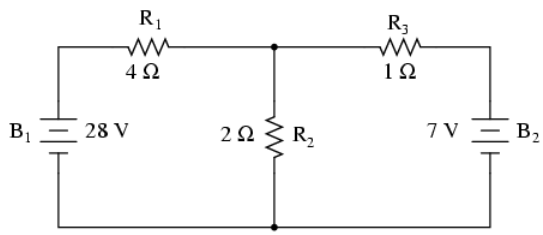

Identifying Loops in a Circuit

The first step in the Mesh Current method is to identify "loops" within the circuit encompassing all components. In our example circuit, the loop formed by B_1, R_1, and R_2 will be the first while the loop formed by B_2, R_2, and R_3 will be the second. The strangest part of the Mesh Current method is envisioning circulating currents in each of the loops. In fact, this method gets its name from the idea of these currents meshing together between loops like sets of spinning gears:

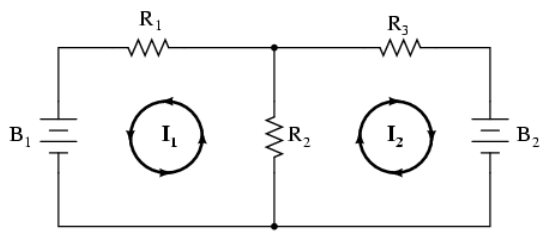

The choice of each current's direction is entirely arbitrary, just as in the Branch Current method, but the resulting equations are easier to solve if the currents are going the same direction through intersecting components (note how currents I_1 and I_2 are both going "up" through resistor R_2, where they "mesh," or intersect). If the assumed direction of a mesh current is wrong, the answer for that current will have a negative value.

Label the Voltage Drop Polarities

The next step is to label all voltage drop polarities across resistors according to the assumed directions of the mesh currents. Remember that the "upstream" end of a resistor will always be negative, and the "downstream" end of a resistor positive with respect to each other, since electrons are negatively charged. The battery polarities, of course, are dictated by their symbol orientations in the diagram, and may or may not "agree" with the resistor polarities (assumed current directions):

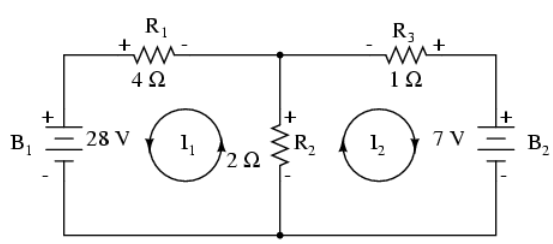

Using Kirchhoff's Voltage Law, we can now step around each of these loops, generating equations representative of the component voltage drops and polarities. As with the Branch Current method, we will denote a resistor's voltage drop as the product of the resistance (in ohms) and its respective mesh current (that quantity being unknown at this point). Where two currents mesh together, we will write that term in the equation with resistor current being the *sum* of the two meshing currents.

Tracing the Left Loop of the Circuit with Equations

Tracing the left loop of the circuit, starting from the upper-left corner and moving counter-clockwise (the choice of starting points and directions is ultimately irrelevant), counting polarity as if we had a voltmeter in hand, red lead on the point ahead and black lead on the point behind, we get this equation:

$$-28 + 2(I_1 + I_2) + 4I_1 = 0$$

Notice that the middle term of the equation uses the sum of mesh currents I_1 and I_2 as the current through resistor R_2. This is because mesh currents I_1 and I_2 are going the same direction through R_2, and thus complement each other. Distributing the coefficient of 2 to the I_1 and I_2 terms, and then combining I_1 terms in the equation, we can simplify as such:

$-28 + 2(I_1 + I_2) + 4I_1 = 0$ *Original form of equation*

. . . distributing to terms within parentheses . . .

$-28 + 2I_1 + 2I_2 + 4I_1 = 0$

. . . combining like terms . . .

$\mathbf{-28 + 6I_1 + 2I_2 = 0}$ *Simplified form of equation*

At this time we have one equation with two unknowns. To be able to solve for two unknown mesh currents, we must have two equations. If we trace the other loop of the circuit, we can obtain another KVL equation and have enough data to solve for the two currents. Creature of habit that I am, I'll start at the upper-left hand corner of the right loop and trace counter-clockwise:

$$-2(I_1 + I_2) + 7 - 1I_2 = 0$$

Simplifying the equation as before, we end up with:

$$-2I_1 - 3I_2 + 7 = 0$$

Now, with two equations, we can use one of several methods to mathematically solve for the unknown currents I_1 and I_2:

$-28 + 6I_1 + 2I_2 = 0$

$-2I_1 - 3I_2 + 7 = 0$

. . . rearranging equations for easier solution . . .

$6I_1 + 2I_2 = 28$

$-2I_1 - 3I_2 = -7$

Solutions:

$I_1 = 5$ A

$I_2 = -1$ A

Knowing that these solutions are values for *mesh* currents, not *branch* currents, we must go back to our diagram to see how they fit together to give currents through all components:

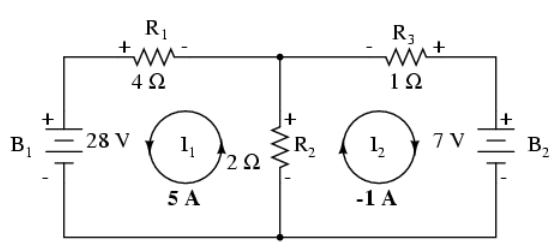

The solution of -1 amp for I_2 means that our initially assumed direction of current was incorrect. In actuality, I_2 is flowing in a counter-clockwise direction at a value of (positive) 1 amp:

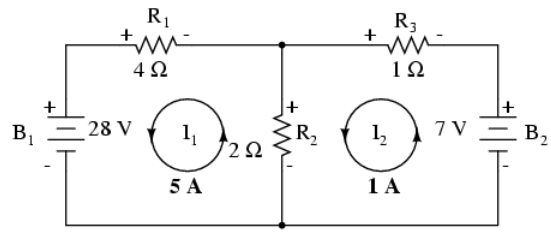

This change of current direction from what was first assumed will alter the polarity of the voltage drops across R_2 and R_3 due to current I_2. From here, we can say that the current through R_1 is 5 amps, with the voltage drop across R_1 being the product of current and resistance (E=IR), 20 volts (positive on the left and negative on the right). Also, we can safely say that the current through R_3 is 1 amp, with a voltage drop of 1 volt (E=IR), positive on the left and negative on the right. But what is happening at R_2?

Mesh current I_1 is going "up" through R_2, while mesh current I_2 is going "down" through R_2. To determine the actual current through R_2, we must see how mesh currents I_1 and I_2 interact (in this case they're in opposition), and algebraically add them to arrive at a final value. Since I_1 is going "up" at 5 amps, and I_2 is going "down" at 1 amp, the *real* current through R_2 must be a value of 4 amps, going "up:"

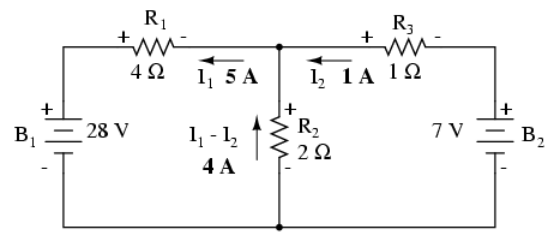

A current of 4 amps through R_2's resistance of 2 Ω gives us a voltage drop of 8 volts (E=IR), positive on the top and negative on the bottom.

Advantage of Mesh Current Analysis

The primary advantage of Mesh Current analysis is that it generally allows for the solution of a large network with fewer unknown values and fewer simultaneous equations. Our example problem took three equations to solve the Branch Current method and only two equations using the Mesh Current method. This advantage is much greater as networks increase in complexity:

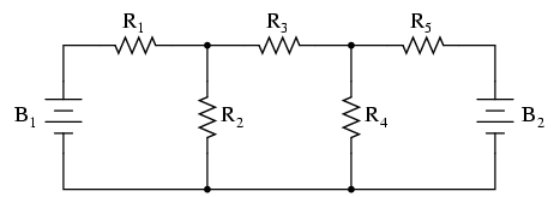

To solve this network using Branch Currents, we'd have to establish five variables to account for each and every unique current in the circuit (I_1 through I_5). This would require five equations for solution, in the form of two KCL equations and three KVL equations (two equations for KCL at the nodes, and three equations for KVL in each loop):

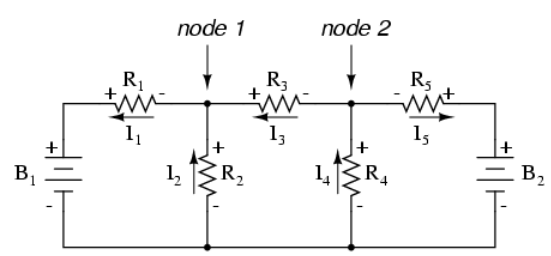

$$-I_1 + I_2 + I_3 = 0$$ *Kirchhoff's Current Law at node 1*

$$-I_3 + I_4 - I_5 = 0$$ *Kirchhoff's Current Law at node 2*

$$-E_{B1} + I_2R_2 + I_1R_1 = 0$$ *Kirchhoff's Voltage Law in left loop*

$$-I_2R_2 + I_4R_4 + I_3R_3 = 0$$ *Kirchhoff's Voltage Law in middle loop*

$$-I_4R_4 + E_{B2} - I_5R_5 = 0$$ *Kirchhoff's Voltage Law in right loop*

I suppose if you have nothing better to do with your time than to solve for five unknown variables with five equations, you might not mind using the Branch Current method of analysis for this circuit. For those of us who *have* better things to do with our time, the Mesh Current method is a whole lot easier, requiring only three unknowns and three equations to solve:

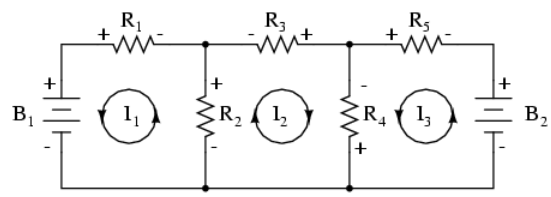

$$-E_{B1} + R_2(I_1 + I_2) + I_1R_1 = 0$$ *Kirchhoff's Voltage Law in left loop*

$$-R_2(I_2 + I_1) - R_4(I_2 + I_3) - I_2R_3 = 0$$ *Kirchhoff's Voltage Law in middle loop*

$$R_4(I_3 + I_2) + E_{B2} + I_3R_5 = 0$$ *Kirchhoff's Voltage Law in right loop*

Less equations to work with is a decided advantage, especially when performing simultaneous equation solution by hand (without a calculator).

Another type of circuit that lends itself well to Mesh Current is the unbalanced Wheatstone Bridge. Take this circuit, for example:

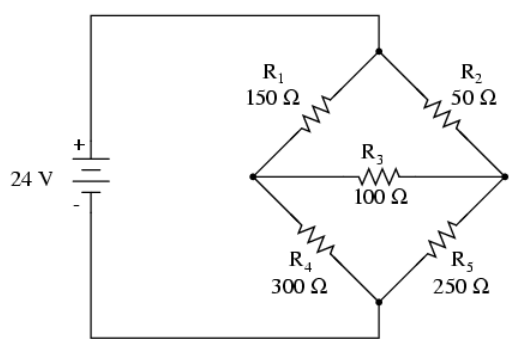

Since the ratios of R_1/R_4 and R_2/R_5 are unequal, we know that there will be voltage across resistor R_3, and some amount of current through it. As discussed at the beginning of this chapter, this type of circuit is irreducible by normal series-parallel analysis, and may only be analyzed by some other method.

We could apply the Branch Current method to this circuit, but it would require *six* currents (I_1 through I_6), leading to a very large set of simultaneous equations to solve. Using the Mesh Current method, though, we may solve for all currents and voltages with much fewer variables.

The first step in the Mesh Current method is to draw just enough mesh currents to account for all components in the circuit. Looking at our bridge circuit, it should be obvious where to place two of these currents:

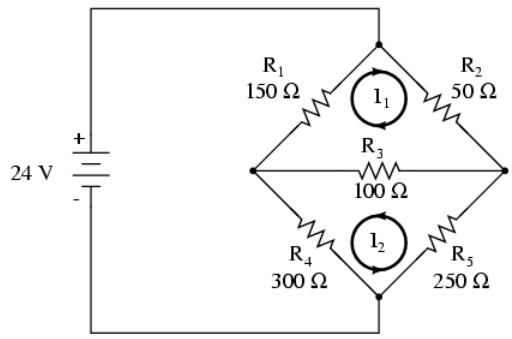

The directions of these mesh currents, of course, is arbitrary. However, two mesh currents is not enough in this circuit, because neither I_1 nor I_2 goes through the battery. So, we must add a third mesh current, I_3:

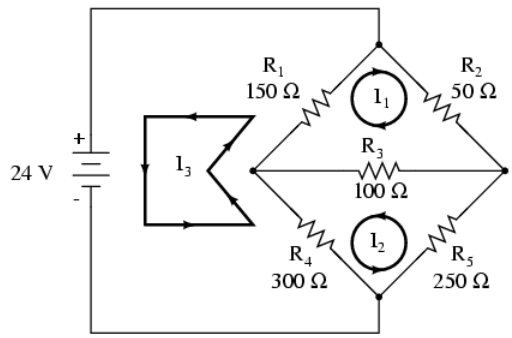

Here, I have chosen I_3 to loop from the bottom side of the battery, through R_4, through R_1, and back to the top side of the battery. This is not the only path I could have chosen for I_3, but it seems the simplest.

Now, we must label the resistor voltage drop polarities, following each of the assumed currents' directions:

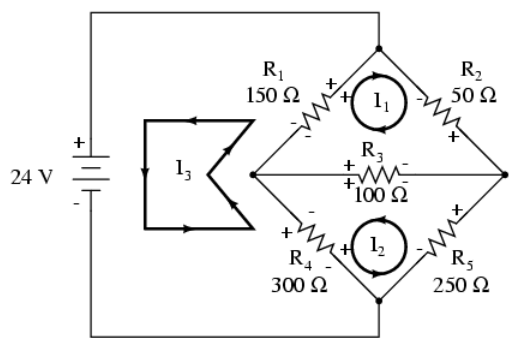

Notice something very important here: at resistor R_4, the polarities for the respective mesh currents do not agree. This is because those mesh currents (I_2 and I_3) are going through R_4 in different directions. This does not preclude the use of the Mesh Current method of analysis, but it does complicate it a bit. Though later, we will show how to avoid the R_4 current clash. (See Example below)

Generating a KVL equation for the top loop of the bridge, starting from the top node and tracing in a clockwise direction:

$$50I_1 + 100(I_1 + I_2) + 150(I_1 + I_3) = 0 \qquad \textit{Original form of equation}$$

. . . distributing to terms within parentheses . . .

$$50I_1 + 100I_1 + 100I_2 + 150I_1 + 150I_3 = 0$$

. . . combining like terms . . .

$$\mathbf{300I_1 + 100I_2 + 150I_3 = 0} \qquad \textit{Simplified form of equation}$$

In this equation, we represent the common directions of currents by their *sums* through common resistors. For example, resistor R_3, with a value of 100 Ω, has its voltage drop represented in the above KVL equation by the expression $100(I_1 + I_2)$, since both currents I_1 and I_2 go through R_3 from right to left. The same may be said for resistor R_1, with its voltage drop expression shown as $150(I_1 + I_3)$, since both I_1 and I_3 go from bottom to top through that resistor, and thus work *together* to generate its voltage drop.

Generating a KVL equation for the bottom loop of the bridge will not be so easy, since we have two currents going against each other through resistor R_4. Here is how I do it (starting at the right-hand node, and tracing counter-clockwise):

$$100(I_1 + I_2) + 300(I_2 - I_3) + 250I_2 = 0 \qquad \textit{Original form of equation}$$

. . . distributing to terms within parentheses . . .

$$100I_1 + 100I_2 + 300I_2 - 300I_3 + 250I_2 = 0$$

. . . combining like terms . . .

$$\mathbf{100I_1 + 650I_2 - 300I_3 = 0} \qquad \textit{Simplified form of equation}$$

Note how the second term in the equation's original form has resistor R_4's value of 300 Ω multiplied by the *difference* between I_2 and I_3 ($I_2 - I_3$). This is how we represent the combined effect of two mesh currents going in opposite directions through the same component. Choosing the appropriate mathematical signs is very important here: $300(I_2 - I_3)$ does not mean the same thing as $300(I_3 - I_2)$. I chose to write $300(I_2 - I_3)$ because I was thinking first of I_2's effect (creating a positive voltage drop, measuring with an imaginary voltmeter across R_4, red lead on the bottom and black lead on the top), and secondarily of I_3's effect (creating a negative voltage drop, red lead on the bottom and black lead on the top). If I had thought in terms of I_3's effect first and I_2's effect secondarily, holding my imaginary voltmeter leads in the same positions (red on bottom and black on top), the expression would have been $-300(I_3 - I_2)$. Note that this expression *is* mathematically equivalent to the first one: $+300(I_2 - I_3)$.

Well, that takes care of two equations, but I still need a third equation to complete my simultaneous equation set of three variables, three equations. This third equation must also include the battery's voltage, which up to this point does not appear in either two of the previous KVL equations. To generate this equation, I will trace a loop again with my imaginary voltmeter starting from the battery's bottom (negative) terminal, stepping clockwise (again, the direction in which I step is arbitrary, and does not need to be the same as the direction of the mesh current in that loop):

$$24 - 150(I_3 + I_1) - 300(I_3 - I_2) = 0 \qquad \textit{Original form of equation}$$

. . . distributing to terms within parentheses . . .

$$24 - 150I_3 - 150I_1 - 300I_3 + 300I_2 = 0$$

. . . combining like terms . . .

$$\mathbf{-150I_1 + 300I_2 - 450I_3 = -24} \qquad \textit{Simplified form of equation}$$

Solving for I_1, I_2, and I_3 using whatever simultaneous equation method we prefer:

$$300I_1 + 100I_2 + 150I_3 = 0$$
$$100I_1 + 650I_2 - 300I_3 = 0$$
$$-150I_1 + 300I_2 - 450I_3 = -24$$

Solutions:

$$I_1 = -93.793 \text{ mA}$$
$$I_2 = 77.241 \text{ mA}$$
$$I_3 = 136.092 \text{ mA}$$

Example:

Use Octave to find the solution for I_1, I_2, and I_3 from the above simplified form of equations.

Solution:

In Octave, an open source Matlab® clone, enter the coefficients into the A matrix between square brackets with column elements comma separated, and rows semicolon separated.Enter the voltages into the column vector: b. The unknown currents: I_1, $_2$, and I_3 are calculated by the command: x=A\b. These are contained within the x column vector.

```
octave:1>A = [300,100,150;100,650,-300;-150,300,-450] A = 300 100 150 100 650 -300 -150 300 -450 octave:2>
b = [0;0;-24] b = 0 0 -24 octave:3> x = A\b x = -0.093793 0.077241 0.136092
```

The negative value arrived at for I_1 tells us that the assumed direction for that mesh current was incorrect. Thus, the actual current values through each resistor is as such:

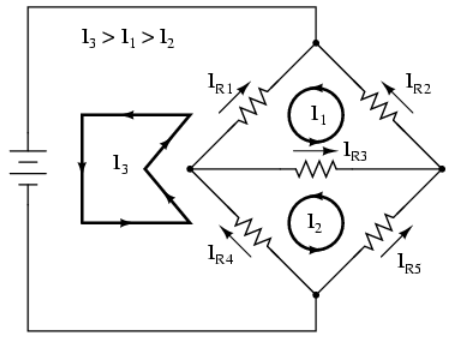

$I_{R1} = I_3 - I_1 = 136.092\text{ mA} - 93.793\text{ mA} = 42.299\text{ mA}$
$I_{R2} = I_1 = 93.793\text{ mA}$
$I_{R3} = I_1 - I_2 = 93.793\text{ mA} - 77.241\text{ mA} = 16.552\text{ mA}$
$I_{R4} = I_3 - I_2 = 136.092\text{ mA} - 77.241\text{ mA} = 58.851\text{ mA}$
$I_{R5} = I_2 = 77.241\text{ mA}$

Calculating voltage drops across each resistor:

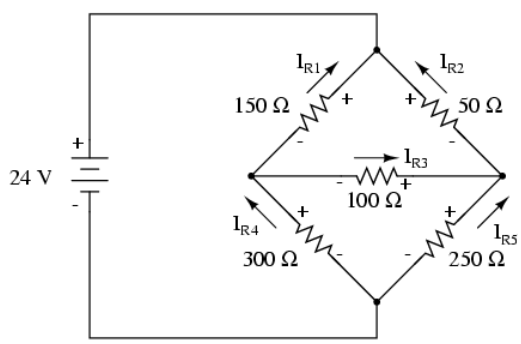

$E_{R1} = I_{R1}R_1 = (42.299\text{ mA})(150\ \Omega) = 6.3448\text{ V}$
$E_{R2} = I_{R2}R_2 = (93.793\text{ mA})(50\ \Omega) = 4.6897\text{ V}$
$E_{R3} = I_{R3}R_3 = (16.552\text{ mA})(100\ \Omega) = 1.6552\text{ V}$
$E_{R4} = I_{R4}R_4 = (58.851\text{ mA})(300\ \Omega) = 17.6552\text{ V}$
$E_{R5} = I_{R5}R_5 = (77.241\text{ mA})(250\ \Omega) = 19.3103\text{ V}$

A SPICE simulation confirms the accuracy of our voltage calculations:

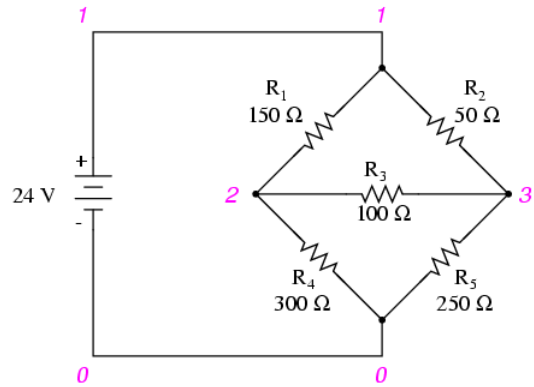


```
unbalanced wheatstone bridge v1 1 0 r1 1 2 150 r2 1 3 50 r3 2 3 100 r4 2 0 300 r5 3 0 250 .dc v1 24 24 1 .
print dc v(1,2) v(1,3) v(3,2) v(2,0) v(3,0) .end v1 v(1,2) v(1,3) v(3,2) v(2) v(3) 2.400E+01 6.345E+00 4.6
90E+00 1.655E+00 1.766E+01 1.931E+01
```

Example:

(a) Find a new path for current I_3 that does not produce a conflicting polarity on any resistor compared to I_1or I_2. R_4 was the offending component. (b) Find values for I_1, I_2, and I_3. (c) Find the five resistor currents and compare to the previous values.

Solution:

(a) Route I_3 through R_5, R_3 and R_1 as shown:

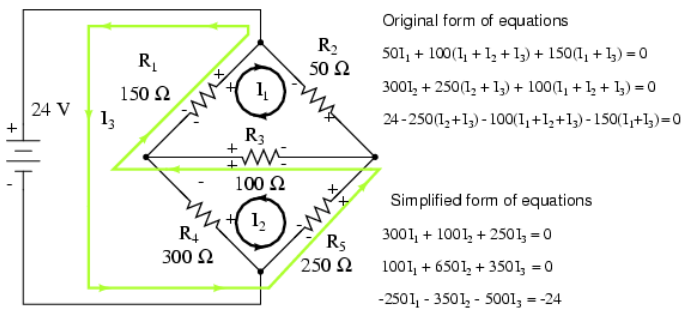

Note that the conflicting polarity on R_4 has been removed. Moreover, none of the other resistors have conflicting polarities.

(b) Octave, an open source (free) matlab clone, yields a mesh current vector at “x”:

```
octave:1> A = [300,100,250;100,650,350;-250,-350,-500] A = 300 100 250 100 650 350 -250 -350 -500 octave:2
> b = [0;0;-24] b = 0 0 -24 octave:3> x = A\b x = -0.093793 -0.058851 0.136092
```

Not all currents I_1, I_2, and I_3 are the same (I_2) as the previous bridge because of different loop paths However, the resistor currents compare to the previous values:

```
 IR1 = I1 + I3 = -93.793 ma + 136.092 ma = 42.299 ma IR2 = I1 = -93.793 ma IR3 = I1 + I2 + I3 = -93.793 ma
-58.851 ma + 136.092 ma = -16.552 ma IR4 = I2 = -58.851 ma IR5 = I2 + I3 = -58.851 ma + 136.092 ma = 77.24
1 ma
```

Since the resistor currents are the same as the previous values, the resistor voltages will be identical and need not be calculated again.

Review

- Steps to follow for the “Mesh Current” method of analysis:

(1) Draw mesh currents in loops of circuit, enough to account for all components.

(2) Label resistor voltage drop polarities based on assumed directions of mesh currents.

(3) Write KVL equations for each loop of the circuit, substituting the product IR for E in each resistor term of the equation. Where two mesh currents intersect through a component, express the current as the algebraic sum of those two mesh currents (i.e. $I_1 + I_2$) if the currents go in the same direction through that component. If not, express the current as the difference (i.e. $I_1 - I_2$).

(4) Solve for unknown mesh currents (simultaneous equations).

(5) If any solution is negative, then the assumed current direction is wrong!

(6) Algebraically add mesh currents to find current in components sharing multiple mesh currents.

(7) Solve for voltage drops across all resistors (E=IR).

Mesh Current by Inspection

We take a second look at the "mesh current method" with all the currents running counterclockwise (ccw). The motivation is to simplify the writing of mesh equations by ignoring the resistor voltage drop polarity. Though, we must pay attention to the polarity of voltage sources with respect to assumed current direction. The sign of the resistor voltage drops will follow a fixed pattern.

If we write a set of conventional mesh-current equations for the circuit below, where we do pay attention to the signs of the voltage drop across the resistors, we may rearrange the coefficients into a fixed pattern:

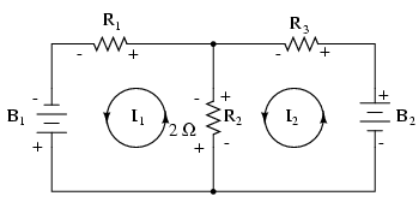

Mesh equations

$$(I_1 - I_2)R_2 + I_1R_1 - B_1 = 0$$

$$I_2R_3 - (I_1 - I_2)R_2 - B_2 = 0$$

Simplified

$$(R_1 + R_2)I_1 \quad - R_2I_2 = B_1$$

$$-R_2I_1 + (R_2 + R_3)I_2 = B_2$$

Once rearranged, we may write equations by inspection. The signs of the coefficients follow a fixed pattern in the pair above, or the set of three in the rules below.

Mesh Current Rules:

This method assumes electron flow (not conventional current flow) voltage sources. Replace any current source in parallel with a resistor with an equivalent voltage source in series with an equivalent resistance.

Ignoring current direction or voltage polarity on resistors, draw counterclockwise current loops traversing all components. Avoid nested loops.

Write voltage-law equations in terms of unknown currents: I_1, I_2, and I_3. Equation 1 coefficient 1, equation 2, coefficient 2, and equation 3 coefficient 3 are the positive sums of resistors around the respective loops.

All other coefficients are negative, representative of the resistance common to a pair of loops. Equation 1 coefficient 2 is the resistor common to loops 1 and 2, coefficient 3 the resistor common to loops 1 an 3. Repeat for other equations and coefficients.

```
 +(sum of R's loop 1)I1 - (common R loop 1-2)I2 - (common R loop 1-3)I3 = E1 -(common R loop 1-2)I1
+ (sum of R's loop 2)I2 - (common R loop 2-3)I3 = E2 -(common R loop 1-3)I1 - (common R loop 2-3)I2
+ (sum of R's loop 3)I3 = E3
```

The right-hand side of the equations is equal to any electron current flow voltage source. A voltage rise with respect to the counterclockwise assumed current is positive, and 0 for no voltage source.

Solve equations for mesh currents:I_1, I_2, and I_3 . Solve for currents through individual resistors with KCL. Solve for voltages with Ohms Law and KVL.

While the above rules are specific for a three mesh circuit, the rules may be extended to smaller or larger meshes. The figure below illustrates the application of the rules. The three currents are all drawn in the same direction, counterclockwise. One KVL equation is written for each of the three loops. Note that there is no polarity drawn on the resistors. We do not need it to determine the signs of the coefficients. Though we do need to pay attention to the polarity of the voltage source with respect to current direction. The

I_3counterclockwise current traverses the 24V source from (+) to (-). This is a voltage rise for electron current flow. Therefore, the third equation right-hand side is +24V.

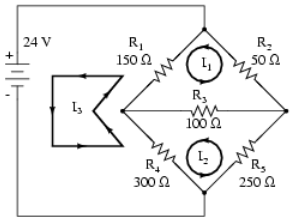

$$
\begin{aligned}
+(R_1+R_2+R_3)I_1 \quad -(R_3)I_2 \quad -(R_1)I_3 &= 0\\
-R_3)I_1 +(R_3+R_4+R_5)I_2 \quad -(R_4)I_3 &= 0\\
-(R_1)I_1 \quad -(R_4)I_2 +(R_1+R_4)I_3 &= 24
\end{aligned}
$$

$$
\begin{aligned}
+(150+50+100)I_1 \quad -(100)I_2 \quad -(150)I_3 &= 0\\
-(100)I_1 +(100+300+250)I_2 \quad -(300)I_3 &= 0\\
-(150)I_1 \quad -(300)I_2 +(150+300)I_3 &= 24
\end{aligned}
$$

$$
\begin{aligned}
+(300)I_1 \quad -(100)I_2 \quad -(150)I_3 &= 0\\
-(100)I_1 +(650)I_2 \quad -(300)I_3 &= 0\\
-(150)I_1 \quad -(300)I_2 \quad +(450)I_3 &= 24
\end{aligned}
$$

In Octave, enter the coefficients into the A matrix with column elements comma separated, and rows semicolon separated. Enter the voltages into the column vector b. Solve for the unknown currents: I_1, I_2, and I_3 with the command: x=A\b. These currents are contained within the x column vector. The positive values indicate that the three mesh currents all flow in the assumed counterclockwise direction.

```
octave:2> A=[300,-100,-150;-100,650,-300;-150,-300,450] A = 300 -100 -150 -100 650 -300 -150 -300 450 octa
ve:3> b=[0;0;24] b = 0 0 24 octave:4> x=A\b x = 0.093793 0.077241 0.136092
```

The mesh currents match the previous solution by a different mesh current method.. The calculation of resistor voltages and currents will be identical to the previous solution. No need to repeat here.

Note that electrical engineering texts are based on conventional current flow. The loop-current, mesh-current method in those text will run the assumed mesh currents **clockwise**.The conventional current flows out the (+) terminal of the battery through the circuit, returning to the (-) terminal. A conventional current voltage rise corresponds to tracing the assumed current from (-) to (+) through any voltage sources.

One more example of a previous circuit follows. The resistance around loop 1 is 6 Ω, around loop 2: 3 Ω. The resistance common to both loops is 2 Ω. Note the coefficients of I_1 and I_2 in the pair of equations. Tracing the assumed counterclockwise loop 1 current through B_1 from (+) to (-) corresponds to an electron current flow voltage rise. Thus, the sign of the 28 V is positive. The loop 2 counter clockwise assumed current traces (-) to (+) through B_2, a voltage drop. Thus, the sign of B_2 is negative, -7 in the 2nd mesh equation. Once again, there are no polarity markings on the resistors. Nor do they figure into the equations.

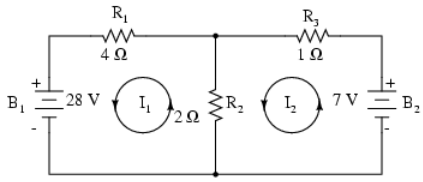

$$
\left.\begin{aligned}
6I_1 - 2I_2 &= 28\\
-2I_1 + 3I_2 &= -7
\end{aligned}\right\}\ \text{Mesh equations}
$$

$$
\begin{aligned}
6I_1 - 2I_2 &= 28 \qquad & 6I_1 - 2I_2 &= 28\\
-6I_1 + 9I_2 &= -21 \qquad & 6I_1 - 2(1) &= 28\\
7I_2 &= 7 \qquad & 6I_1 &= 30\\
I_2 &= 1 \qquad & I_1 &= 5
\end{aligned}
$$

The currents I_1 = 5 A, and I_2 = 1 A are both positive. They both flow in the direction of the counterclockwise loops. This compares with previous results.

Summary:

- The modified mesh-current method avoids having to determine the signs of the equation coefficients by drawing all mesh currents counterclockwise for electron current flow.
- However, we do need to determine the sign of any voltage sources in the loop. The voltage source is positive if the assumed ccw current flows with the battery (source). The sign is negative if the assumed ccw current flows against the battery.
- See rules above for details.

This page titled 10.3: Mesh Current Method and Analysis is shared under a GNU Free Documentation License 1.3 license and was authored, remixed, and/or curated by Tony R. Kuphaldt (All About Circuits) via source content that was edited to the style and standards of the LibreTexts platform.

10.4: Node Voltage Method

Method for Node Voltage Calculation

We start with a circuit having conventional voltage sources. A common node E_0 is chosen as a reference point. The node voltages E_1 and E_2 are calculated with respect to this point.

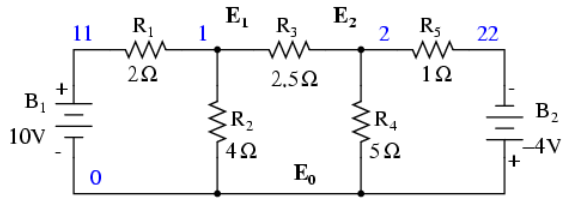

A voltage source in series with a resistance must be replaced by an equivalent current source in parallel with the resistance. We will write KCL equations for each node. The right hand side of the equation is the value of the current source feeding the node.

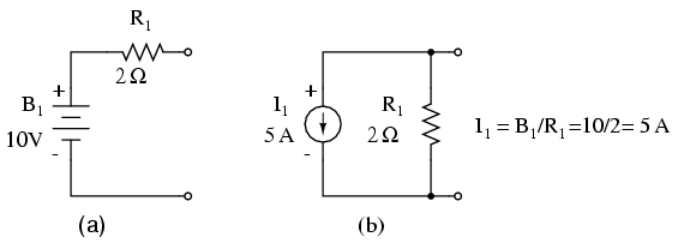

Replacing voltage sources and associated series resistors with equivalent current sources and parallel resistors yields the modified circuit. Substitute resistor conductances in siemens for resistance in ohms.

```
I1 = E1/R1 = 10/2 = 5 A I2 = E2/R5 = 4/1 = 4 A G1 = 1/R1 = 1/2 Ω = 0.5 S G2 = 1/R2 = 1/4 Ω = 0.25 S G3 =
1/R3 = 1/2.5 Ω = 0.4 S G4 = 1/R4 = 1/5 Ω = 0.2 S G5 = 1/R5 = 1/1 Ω = 1.0 S
```

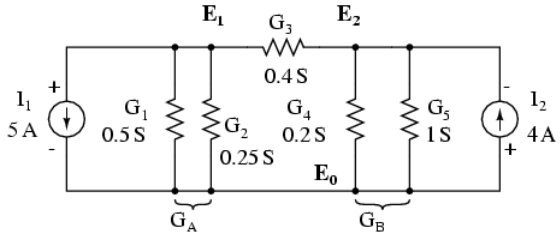

The parallel conductances (resistors) may be combined by addition of the conductances. Though, we will not redraw the circuit. The circuit is ready for application of the node voltage method.

```
GA = G1 + G2 = 0.5 S + 0.25 S = 0.75 S GB = G4 + G5 = 0.2 S + 1 S = 1.2 S
```

Deriving a general node voltage method, we write a pair of KCL equations in terms of unknown node voltages V_1 and V_2 this one time. We do this to illustrate a pattern for writing equations by inspection.

```
GAE1 + G3(E1 - E2) = I1 (1) GBE2 - G3(E1 - E2) = I2 (2) (GA + G3 )E1 -G3E2 = I1 (1) -G3E1 + (GB + G3)E2 =
I2 (2)
```

The coefficients of the last pair of equations above have been rearranged to show a pattern. The sum of conductances connected to the first node is the positive coefficient of the first voltage in equation (1). The sum of conductances connected to the second node is the positive coefficient of the second voltage in equation (2). The other coefficients are negative, representing conductances between nodes. For both equations, the right hand side is equal to the respective current source connected to the node. This pattern allows us to quickly write the equations by inspection. This leads to a set of rules for the node voltage method of analysis.

Node Voltage Rules:

- Convert voltage sources in series with a resistor to an equivalent current source with the resistor in parallel.
- Change resistor values to conductances.
- Select a reference node(E_0)
- Assign unknown voltages (E_1)(E_2) ... (E_N)to remaining nodes.
- Write a KCL equation for each node 1,2, ... N. The positive coefficient of the first voltage in the first equation is the sum of conductances connected to the node. The coefficient for the second voltage in the second equation is the sum of conductances connected to that node. Repeat for coefficient of third voltage, third equation, and other equations. These coefficients fall on a diagonal.
- All other coefficients for all equations are negative, representing conductances between nodes. The first equation, second coefficient is the conductance from node 1 to node 2, the third coefficient is the conductance from node 1 to node 3. Fill in negative coefficients for other equations.
- The right hand side of the equations is the current source connected to the respective nodes.
- Solve system of equations for unknown node voltages.

Example: Set up the equations and solve for the node voltages using the numerical values in the above figure.

Solution:

```
 (0.5+0.25+0.4)E1 -(0.4)E2= 5 -(0.4)E1 +(0.4+0.2+1.0)E2 = -4 (1.15)E1 -(0.4)E2= 5 -(0.4)E1 +(1.6)E2 = -4 E
1 = 3.8095 E2 = -1.5476
```

The solution of two equations can be performed with a calculator, or with octave (not shown).[octav] The solution is verified with SPICE based on the original schematic diagram with voltage sources.[spi] .Though, the circuit with the current sources could have been simulated.

```
 V1 11 0 DC 10 V2 22 0 DC -4 r1 11 1 2 r2 1 0 4 r3 1 2 2.5 r4 2 0 5 r5 2 22 1 .DC V1 10 10 1 V2 -4 -4 1 .p
rint DC V(1) V(2) .end v(1) v(2) 3.809524e+00 -1.547619e+00
```

One more example. This one has three nodes. We do not list the conductances on the schematic diagram. However, $G_1 = 1/R_1$, etc.

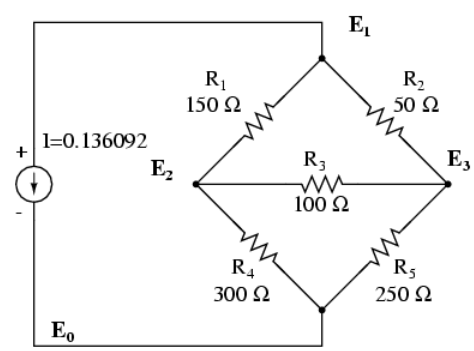

There are three nodes to write equations for by inspection. Note that the coefficients are positive for equation (1) E_1, equation (2) E_2, and equation (3) E_3. These are the sums of all conductances connected to the nodes. All other coefficients are negative, representing a conductance between nodes. The right hand side of the equations is the associated current source, 0.136092 A for the only current source at node 1. The other equations are zero on the right hand side for lack of current sources. We are too lazy to calculate the conductances for the resistors on the diagram. Thus, the subscripted G's are the coefficients.

```
(G1 + G2)E1 -G1E2 -G2E3 = 0.136092 -G1E1 +(G1 + G3 + G4)E2 -G3E3 = 0 -G2E1 -G3E2 +(G2 + G3 + G5)E3 = 0
```

We are so lazy that we enter reciprocal resistances and sums of reciprocal resistances into the octave "A" matrix, letting octave compute the matrix of conductances after "A=". [octav] The initial entry line was so long that it was split into three rows. This is different than previous examples. The entered "A" matrix is delineated by starting and ending square brackets. Column elements

are space separated. Rows are “new line” separated. Commas and semicolons are not need as separators. Though, the current vector at “b” is semicolon separated to yield a column vector of currents.

```
 octave:12> A = [1/150+1/50 -1/150 -1/50 > -1/150 1/150+1/100+1/300 -1/100 > -1/50 -1/100 1/50+1/100+1/25
0] A = 0.0266667 -0.0066667 -0.0200000 -0.0066667 0.0200000 -0.0100000 -0.0200000 -0.0100000 0.0340000 oct
ave:13> b = [0.136092;0;0] b = 0.13609 0.00000 0.00000 octave:14> x=A\b x = 24.000 17.655 19.310
```

Note that the “A” matrix diagonal coefficients are positive, That all other coefficients are negative.

The solution as a voltage vector is at “x”. E_1 = 24.000 V, E_2 = 17.655 V, E_3 = 19.310 V. These three voltages compare to the previous mesh current and SPICE solutions to the unbalanced bridge problem. This is no coincidence, for the 0.13609 A current source was purposely chosen to yield the 24 V used as a voltage source in that problem.

Summary

- Given a network of conductances and current sources, the node voltage method of circuit analysis solves for unknown node voltages from KCL equations.
- See rules above for details in writing the equations by inspection.

This page titled 10.4: Node Voltage Method is shared under a GNU Free Documentation License 1.3 license and was authored, remixed, and/or curated by Tony R. Kuphaldt (All About Circuits) via source content that was edited to the style and standards of the LibreTexts platform.

10.5: Introduction to Network Theorems

Anyone who's studied geometry should be familiar with the concept of a *theorem*: a relatively simple rule used to solve a problem, derived from a more intensive analysis using fundamental rules of mathematics. At least hypothetically, any problem in math can be solved just by using the simple rules of arithmetic (in fact, this is how modern digital computers carry out the most complex mathematical calculations: by repeating many cycles of additions and subtractions!), but human beings aren't as consistent or as fast as a digital computer. We need "shortcut" methods in order to avoid procedural errors.

In electric network analysis, the fundamental rules are Ohm's Law and Kirchhoff's Laws. While these humble laws may be applied to analyze just about any circuit configuration (even if we have to resort to complex algebra to handle multiple unknowns), there are some "shortcut" methods of analysis to make the math easier for the average human.

As with any theorem of geometry or algebra, these network theorems are derived from fundamental rules. In this chapter, I'm not going to delve into the formal proofs of any of these theorems. If you doubt their validity, you can always empirically test them by setting up example circuits and calculating values using the "old" (simultaneous equation) methods versus the "new" theorems, to see if the answers coincide. They always should!

This page titled 10.5: Introduction to Network Theorems is shared under a GNU Free Documentation License 1.3 license and was authored, remixed, and/or curated by Tony R. Kuphaldt (All About Circuits) via source content that was edited to the style and standards of the LibreTexts platform.

10.6: Millman's Theorem

In Millman's Theorem, the circuit is re-drawn as a parallel network of branches, each branch containing a resistor or series battery/resistor combination. Millman's Theorem is applicable only to those circuits which can be re-drawn accordingly. Here again is our example circuit used for the last two analysis methods:

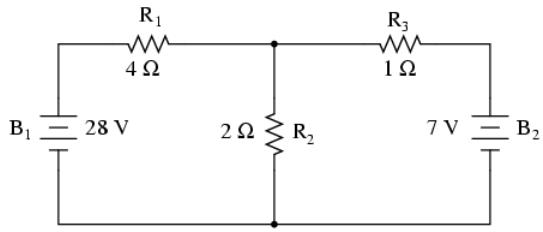

And here is that same circuit, re-drawn for the sake of applying Millman's Theorem:

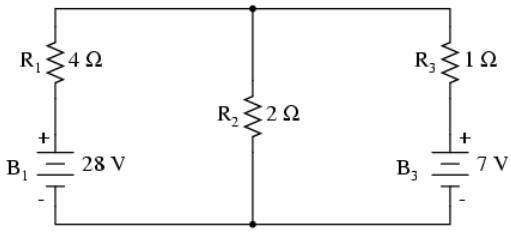

By considering the supply voltage within each branch and the resistance within each branch, Millman's Theorem will tell us the voltage across all branches. Please note that I've labeled the battery in the rightmost branch as "B_3" to clearly denote it as being in the third branch, even though there is no "B_2" in the circuit!

Millman's Theorem is nothing more than a long equation, applied to any circuit drawn as a set of parallel-connected branches, each branch with its own voltage source and series resistance:

Millman's Theorem Equation

$$\frac{\frac{E_{B1}}{R_1} + \frac{E_{B2}}{R_2} + \frac{E_{B3}}{R_3}}{\frac{1}{R_1} + \frac{1}{R_2} + \frac{1}{R_3}} = \text{Voltage across all branches}$$

Substituting actual voltage and resistance figures from our example circuit for the variable terms of this equation, we get the following expression:

$$\frac{\frac{28\text{ V}}{4\ \Omega} + \frac{0\text{ V}}{2\ \Omega} + \frac{7\text{ V}}{1\ \Omega}}{\frac{1}{4\ \Omega} + \frac{1}{2\ \Omega} + \frac{1}{1\ \Omega}} = 8\text{ V}$$

The final answer of 8 volts is the voltage seen across all parallel branches, like this:

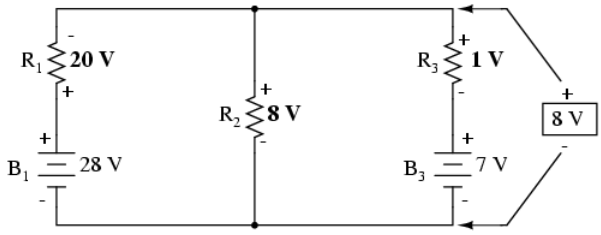

The polarity of all voltages in Millman's Theorem are referenced to the same point. In the example circuit above, I used the bottom wire of the parallel circuit as my reference point, and so the voltages within each branch (28 for the R_1 branch, 0 for the R_2 branch, and 7 for the R_3 branch) were inserted into the equation as positive numbers. Likewise, when the answer came out to 8 volts (positive), this meant that the top wire of the circuit was positive with respect to the bottom wire (the original point of reference). If both batteries had been connected backwards (negative ends up and positive ends down), the voltage for branch 1 would have been entered into the equation as a -28 volts, the voltage for branch 3 as -7 volts, and the resulting answer of -8 volts would have told us that the top wire was negative with respect to the bottom wire (our initial point of reference).

To solve for resistor voltage drops, the Millman voltage (across the parallel network) must be compared against the voltage source within each branch, using the principle of voltages adding in series to determine the magnitude and polarity of voltage across each resistor:

$$E_{R1} = 8\text{ V} - 28\text{ V} = -20\text{ V} \quad \text{(negative on top)}$$

$$E_{R2} = 8\text{ V} - 0\text{ V} = 8\text{ V} \quad \text{(positive on top)}$$

$$E_{R3} = 8\text{ V} - 7\text{ V} = 1\text{ V} \quad \text{(positive on top)}$$

To solve for branch currents, each resistor voltage drop can be divided by its respective resistance (I=E/R):

$$I_{R1} = \frac{20\text{ V}}{4\ \Omega} = 5\text{ A}$$

$$I_{R2} = \frac{8\text{ V}}{2\ \Omega} = 4\text{ A}$$

$$I_{R3} = \frac{1\text{ V}}{1\ \Omega} = 1\text{ A}$$

The direction of current through each resistor is determined by the polarity across each resistor, *not* by the polarity across each battery, as current can be forced backwards through a battery, as is the case with B_3 in the example circuit. This is important to keep in mind, since Millman's Theorem doesn't provide as direct an indication of "wrong" current direction as does the Branch Current or Mesh Current methods. You must pay close attention to the polarities of resistor voltage drops as given by Kirchhoff's Voltage Law, determining direction of currents from that.

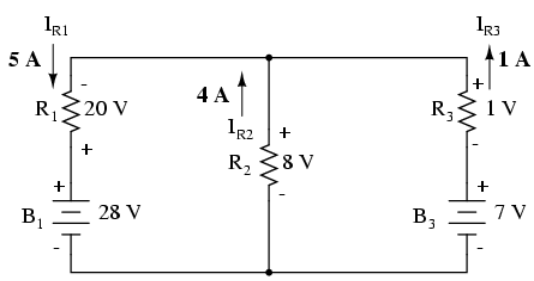

Millman's Theorem is very convenient for determining the voltage across a set of parallel branches, where there are enough voltage sources present to preclude solution via regular series-parallel reduction method. It also is easy in the sense that it doesn't require the use of simultaneous equations. However, it is limited in that it only applied to circuits which can be re-drawn to fit this form. It cannot be used, for example, to solve an unbalanced bridge circuit. And, even in cases where Millman's Theorem can be applied, the solution of individual resistor voltage drops can be a bit daunting to some, the Millman's Theorem equation only providing a single figure for branch voltage.

As you will see, each network analysis method has its own advantages and disadvantages. Each method is a tool, and there is no tool that is perfect for all jobs. The skilled technician, however, carries these methods in his or her mind like a mechanic carries a set of tools in his or her tool box. The more tools you have equipped yourself with, the better prepared you will be for any eventuality.

Review

- Millman's Theorem treats circuits as a parallel set of series-component branches.
- All voltages entered and solved for in Millman's Theorem are polarity-referenced at the same point in the circuit (typically the bottom wire of the parallel network).

This page titled 10.6: Millman's Theorem is shared under a GNU Free Documentation License 1.3 license and was authored, remixed, and/or curated by Tony R. Kuphaldt (All About Circuits) via source content that was edited to the style and standards of the LibreTexts platform.

10.7: Superposition Theorem

Series/Parallel Analysis

The strategy used in the Superposition Theorem is to eliminate all but one source of power within a network at a time, using series/parallel analysis to determine voltage drops (and/or currents) within the modified network for each power source separately. Then, once voltage drops and/or currents have been determined for each power source working separately, the values are all "superimposed" on top of each other (added algebraically) to find the actual voltage drops/currents with all sources active. Let's look at our example circuit again and apply Superposition Theorem to it:

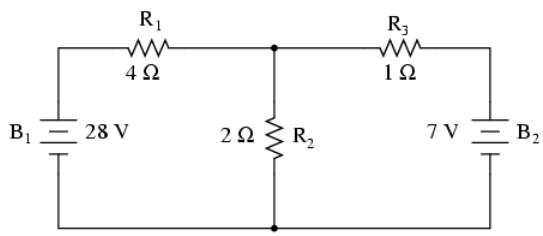

Since we have two sources of power in this circuit, we will have to calculate two sets of values for voltage drops and/or currents, one for the circuit with only the 28-volt battery in effect. . .

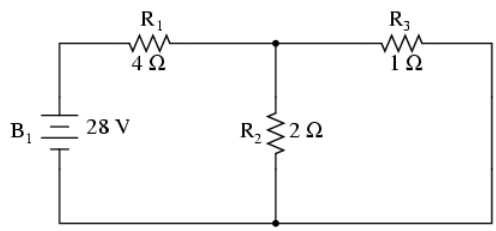

. . . and one for the circuit with only the 7-volt battery in effect:

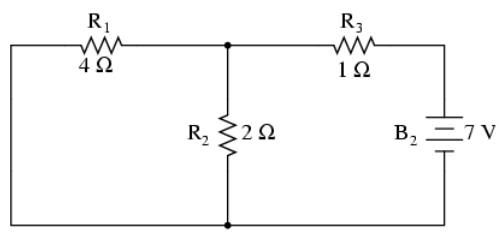

When re-drawing the circuit for series/parallel analysis with one source, all other voltage sources are replaced by wires (shorts), and all current sources with open circuits (breaks). Since we only have voltage sources (batteries) in our example circuit, we will replace every inactive source during analysis with a wire.

Analyzing the circuit with only the 28-volt battery, we obtain the following values for voltage and current:

	R_1	R_2	R_3	$R_2//R_3$	$R_1 + R_2//R_3$ Total	
E	24	4	4	4	28	Volts
I	6	2	4	6	6	Amps
R	4	2	1	0.667	4.667	Ohms

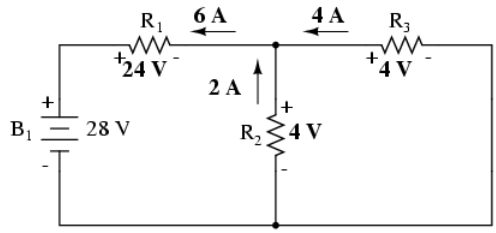

Analyzing the circuit with only the 7-volt battery, we obtain another set of values for voltage and current:

	R_1	R_2	R_3	$R_1//R_2$	$R_3 + R_1//R_2$ Total	
E	4	4	3	4	7	Volts
I	1	2	3	3	3	Amps
R	4	2	1	1.333	2.333	Ohms

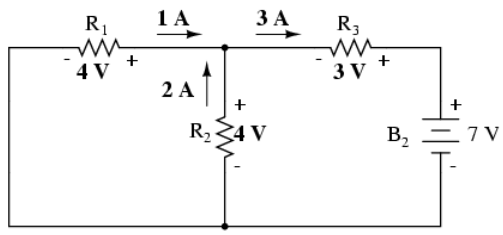

When superimposing these values of voltage and current, we have to be very careful to consider polarity (voltage drop) and direction (electron flow), as the values have to be added *algebraically*.

With 28 V battery	*With 7 V battery*	*With both batteries*
24 V + - E_{R1}	4 V - + E_{R1}	**20 V** E_{R1} + - *24 V - 4 V = 20 V*
E_{R2} + 4 V -	E_{R2} + 4 V -	E_{R2} + **8 V** - *4 V + 4 V = 8 V*
4 V + - E_{R3}	3 V - + E_{R3}	**1 V** E_{R3} + - *4 V - 3 V = 1 V*

Applying these superimposed voltage figures to the circuit, the end result looks something like this:

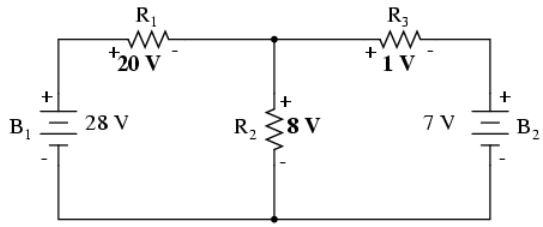

Currents add up algebraically as well and can either be superimposed as done with the resistor voltage drops or simply calculated from the final voltage drops and respective resistances (I=E/R). Either way, the answers will be the same. Here I will show the superposition method applied to current:

With 28 V battery	With 7 V battery	With both batteries
6 A, I_{R1}	1 A, I_{R1}	I_{R1} 5 A *6 A - 1 A = 5 A*
I_{R2} 2 A	I_{R2} 2 A	I_{R2} 4 A *2 A + 2 A = 4 A*
4 A, I_{R3}	3 A, I_{R3}	I_{R3} 1 A *4 A - 3 A = 1 A*

Once again applying these superimposed figures to our circuit:

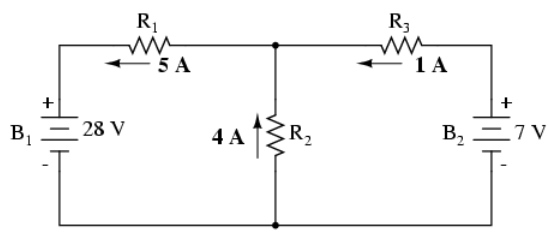

Prerequisites for the Superposition Theorem

Quite simple and elegant, don't you think? It must be noted, though, that the Superposition Theorem works only for circuits that are reducible to series/parallel combinations for each of the power sources at a time (thus, this theorem is useless for analyzing an unbalanced bridge circuit), and it only works where the underlying equations are linear (no mathematical powers or roots). The requisite of linearity means that Superposition Theorem is only applicable for determining voltage and current, *not power!!!* Power dissipations, being nonlinear functions, do not algebraically add to an accurate total when only one source is considered at a time. The need for linearity also means this Theorem cannot be applied in circuits where the resistance of a component changes with voltage or current. Hence, networks containing components like lamps (incandescent or gas-discharge) or varistors could not be analyzed.

Another prerequisite for Superposition Theorem is that all components must be "bilateral," meaning that they behave the same with electrons flowing in either direction through them. Resistors have no polarity-specific behavior, and so the circuits we've been studying so far all meet this criterion.

The Superposition Theorem finds use in the study of alternating current (AC) circuits, and semiconductor (amplifier) circuits, where sometimes AC is often mixed (superimposed) with DC. Because AC voltage and current equations (Ohm's Law) are linear just like DC, we can use Superposition to analyze the circuit with just the DC power source, then just the AC power source, combining the results to tell what will happen with both AC and DC sources in effect. For now, though, Superposition will suffice as a break from having to do simultaneous equations to analyze a circuit.

Review

- The Superposition Theorem states that a circuit can be analyzed with only one source of power at a time, the corresponding component voltages and currents algebraically added to find out what they'll do with all power sources in effect.
- To negate all but one power source for analysis, replace any source of voltage (batteries) with a wire; replace any current source with an open (break).

This page titled 10.7: Superposition Theorem is shared under a GNU Free Documentation License 1.3 license and was authored, remixed, and/or curated by Tony R. Kuphaldt (All About Circuits) via source content that was edited to the style and standards of the LibreTexts platform.

10.8: Thevenin's Theorem

Thevenin's Theorem is especially useful in analyzing power systems and other circuits where one particular resistor in the circuit (called the "load" resistor) is subject to change, and re-calculation of the circuit is necessary with each trial value of load resistance, to determine voltage across it and current through it. Let's take another look at our example circuit:

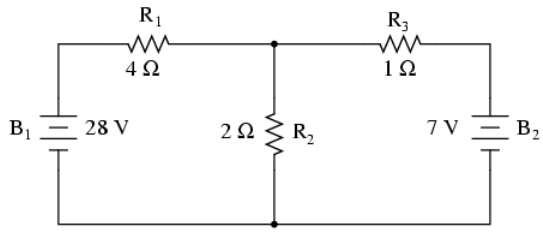

Let's suppose that we decide to designate R_2 as the "load" resistor in this circuit. We already have four methods of analysis at our disposal (Branch Current, Mesh Current, Millman's Theorem, and Superposition Theorem) to use in determining voltage across R_2 and current through R_2, but each of these methods are time-consuming. Imagine repeating any of these methods over and over again to find what would happen if the load resistance changed (changing load resistance is *very* common in power systems, as multiple loads get switched on and off as needed. the total resistance of their parallel connections changing depending on how many are connected at a time). This could potentially involve a *lot* of work!

Thevenin's Theorem makes this easy by temporarily removing the load resistance from the original circuit and reducing what's left to an equivalent circuit composed of a single voltage source and series resistance. The load resistance can then be re-connected to this "Thevenin equivalent circuit" and calculations carried out as if the whole network were nothing but a simple series circuit:

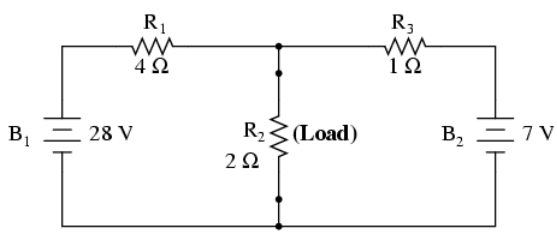

after Thevenin conversion . . .

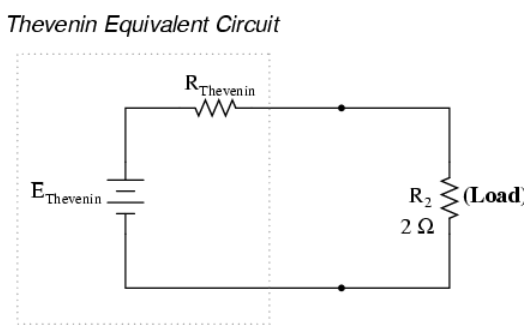

The "Thevenin Equivalent Circuit" is the electrical equivalent of B_1, R_1, R_3, and B_2 as seen from the two points where our load resistor (R_2) connects.

The Thevenin equivalent circuit, if correctly derived, will behave exactly the same as the original circuit formed by B_1, R_1, R_3, and B_2. In other words, the load resistor (R_2) voltage and current should be exactly the same for the same value of load resistance in the two circuits. The load resistor R_2 cannot "tell the difference" between the original network of B_1, R_1, R_3, and B_2, and the Thevenin equivalent circuit of $E_{Thevenin}$, and $R_{Thevenin}$, provided that the values for $E_{Thevenin}$ and $R_{Thevenin}$ have been calculated correctly.

The advantage in performing the "Thevenin conversion" to the simpler circuit, of course, is that it makes load voltage and load current so much easier to solve than in the original network. Calculating the equivalent Thevenin source voltage and series

resistance is actually quite easy. First, the chosen load resistor is removed from the original circuit, replaced with a break (open circuit):

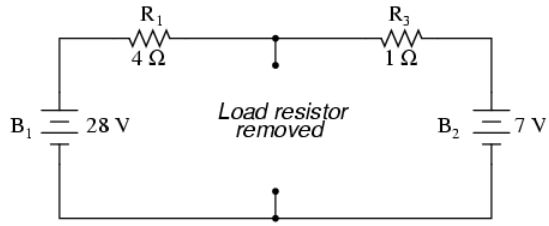

Next, the voltage between the two points where the load resistor used to be attached is determined. Use whatever analysis methods are at your disposal to do this. In this case, the original circuit with the load resistor removed is nothing more than a simple series circuit with opposing batteries, and so we can determine the voltage across the open load terminals by applying the rules of series circuits, Ohm's Law, and Kirchhoff's Voltage Law:

	R_1	R_3	Total	
E	16.8	4.2	21	Volts
I	4.2	4.2	4.2	Amps
R	4	1	5	Ohms

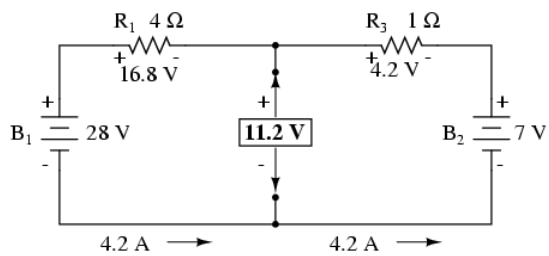

The voltage between the two load connection points can be figured from the one of the battery's voltage and one of the resistor's voltage drops, and comes out to 11.2 volts. This is our "Thevenin voltage" ($E_{Thevenin}$) in the equivalent circuit:

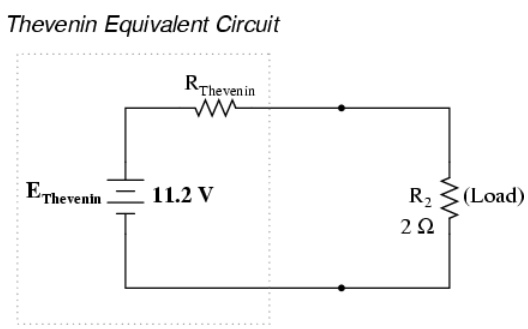

To find the Thevenin series resistance for our equivalent circuit, we need to take the original circuit (with the load resistor still removed), remove the power sources (in the same style as we did with the Superposition Theorem: voltage sources replaced with wires and current sources replaced with breaks), and figure the resistance from one load terminal to the other:

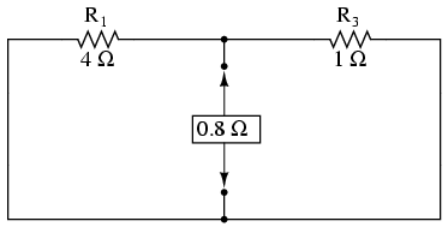

With the removal of the two batteries, the total resistance measured at this location is equal to R_1 and R_3 in parallel: 0.8 Ω. This is our "Thevenin resistance" ($R_{Thevenin}$) for the equivalent circuit:

Thevenin Equivalent Circuit

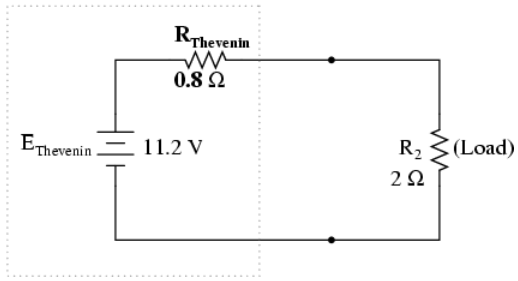

With the load resistor (2 Ω) attached between the connection points, we can determine voltage across it and current through it as though the whole network were nothing more than a simple series circuit:

	$R_{Thevenin}$	R_{Load}	Total	
E	3.2	8	11.2	Volts
I	4	4	4	Amps
R	0.8	2	2.8	Ohms

Notice that the voltage and current figures for R_2 (8 volts, 4 amps) are identical to those found using other methods of analysis. Also notice that the voltage and current figures for the Thevenin series resistance and the Thevenin source (*total*) do not apply to any component in the original, complex circuit. Thevenin's Theorem is only useful for determining what happens to a *single* resistor in a network: the load.

The advantage, of course, is that you can quickly determine what would happen to that single resistor if it were of a value other than 2 Ω without having to go through a lot of analysis again. Just plug in that other value for the load resistor into the Thevenin equivalent circuit and a little bit of series circuit calculation will give you the result.

Review

- Thevenin's Theorem is a way to reduce a network to an equivalent circuit composed of a single voltage source, series resistance, and series load.
- Steps to follow for Thevenin's Theorem:

(1) Find the Thevenin source voltage by removing the load resistor from the original circuit and calculating voltage across the open connection points where the load resistor used to be.

(2) Find the Thevenin resistance by removing all power sources in the original circuit (voltage sources shorted and current sources open) and calculating total resistance between the open connection points.

(3) Draw the Thevenin equivalent circuit, with the Thevenin voltage source in series with the Thevenin resistance. The load resistor re-attaches between the two open points of the equivalent circuit.

(4) Analyze voltage and current for the load resistor following the rules for series circuits.

This page titled 10.8: Thevenin's Theorem is shared under a GNU Free Documentation License 1.3 license and was authored, remixed, and/or curated by Tony R. Kuphaldt (All About Circuits) via source content that was edited to the style and standards of the LibreTexts platform.

10.9: Norton's Theorem

What is Norton's Theorem?

Norton's Theorem states that it is possible to simplify any linear circuit, no matter how complex, to an equivalent circuit with just a single current source and parallel resistance connected to a load. Just as with Thevenin's Theorem, the qualification of "linear" is identical to that found in the Superposition Theorem: all underlying equations must be linear (no exponents or roots).

Simplifying Linear Circuits

Contrasting our original example circuit against the Norton equivalent: it looks something like this:

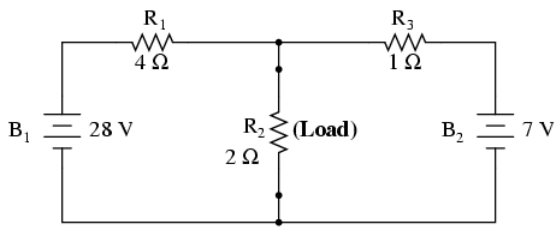

after Norton conversion . . .

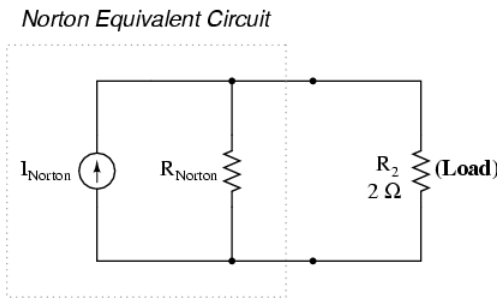

Remember that a *current source* is a component whose job is to provide a constant amount of current, outputting as much or as little voltage necessary to maintain that constant current.

Thevenin's Theorem vs. Norton's Theorem

As with Thevenin's Theorem, everything in the original circuit except the load resistance has been reduced to an equivalent circuit that is simpler to analyze. Also similar to Thevenin's Theorem are the steps used in Norton's Theorem to calculate the Norton source current (I_{Norton}) and Norton resistance (R_{Norton}).

As before, the first step is to identify the load resistance and remove it from the original circuit:

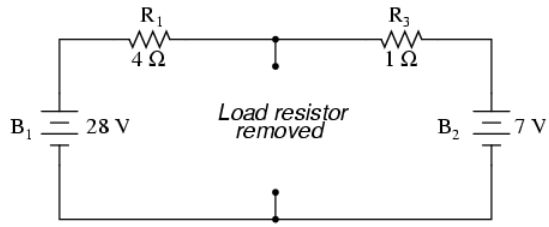

Then, to find the Norton current (for the current source in the Norton equivalent circuit), place a direct wire (short) connection between the load points and determine the resultant current. Note that this step is exactly opposite the respective step in Thevenin's Theorem, where we replaced the load resistor with a break (open circuit):

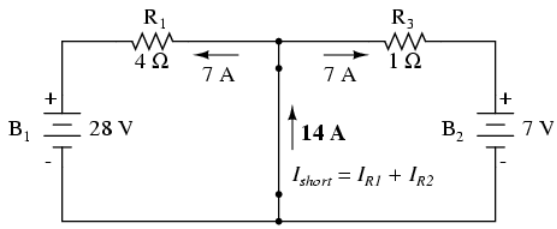

With zero voltage dropped between the load resistor connection points, the current through R_1 is strictly a function of B_1's voltage and R_1's resistance: 7 amps (I=E/R). Likewise, the current through R_3 is now strictly a function of B_2's voltage and R_3's resistance: 7 amps (I=E/R). The total current through the short between the load connection points is the sum of these two currents: 7 amps + 7 amps = 14 amps. This figure of 14 amps becomes the Norton source current (I_{Norton}) in our equivalent circuit:

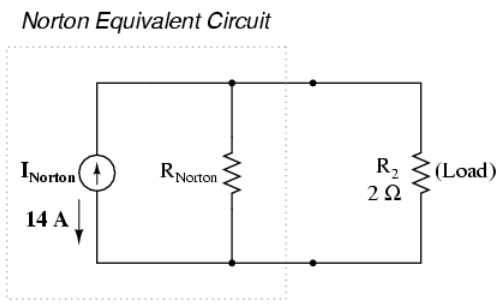

Remember, the arrow notation for a current source points in the direction *opposite* that of electron flow. Again, apologies for the confusion. For better or for worse, this is standard electronic symbol notation. Blame Mr. Franklin again!

To calculate the Norton resistance (R_{Norton}), we do the exact same thing as we did for calculating Thevenin resistance ($R_{Thevenin}$): take the original circuit (with the load resistor still removed), remove the power sources (in the same style as we did with the Superposition Theorem: voltage sources replaced with wires and current sources replaced with breaks), and figure total resistance from one load connection point to the other:

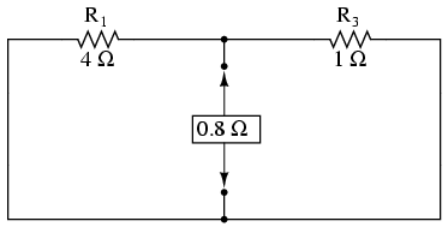

Now our Norton equivalent circuit looks like this:

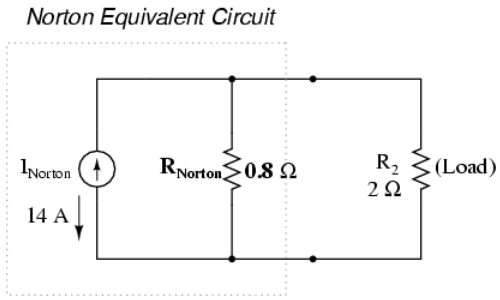

If we re-connect our original load resistance of 2 Ω, we can analyze the Norton circuit as a simple parallel arrangement:

	R_{Norton}	R_{Load}	Total	
E	8	8	8	Volts
I	10	4	14	Amps
R	0.8	2	571.43m	Ohms

As with the Thevenin equivalent circuit, the only useful information from this analysis is the voltage and current values for R_2; the rest of the information is irrelevant to the original circuit. However, the same advantages seen with Thevenin's Theorem apply to Norton's as well: if we wish to analyze load resistor voltage and current over several different values of load resistance, we can use the Norton equivalent circuit again and again, applying nothing more complex than simple parallel circuit analysis to determine what's happening with each trial load.

Review

- Norton's Theorem is a way to reduce a network to an equivalent circuit composed of a single current source, parallel resistance, and parallel load.
- Steps to follow for Norton's Theorem:

(1) Find the Norton source current by removing the load resistor from the original circuit and calculating current through a short (wire) jumping across the open connection points where the load resistor used to be.

(2) Find the Norton resistance by removing all power sources in the original circuit (voltage sources shorted and current sources open) and calculating total resistance between the open connection points.

(3) Draw the Norton equivalent circuit, with the Norton current source in parallel with the Norton resistance. The load resistor re-attaches between the two open points of the equivalent circuit.

(4) Analyze voltage and current for the load resistor following the rules for parallel circuits.

This page titled 10.9: Norton's Theorem is shared under a GNU Free Documentation License 1.3 license and was authored, remixed, and/or curated by Tony R. Kuphaldt (All About Circuits) via source content that was edited to the style and standards of the LibreTexts platform.

10.10: Thevenin-Norton Equivalencies

You may have noticed that the procedure for calculating Thevenin resistance is identical to the procedure for calculating Norton resistance: remove all power sources and determine resistance between the open load connection points. As such, Thevenin and Norton resistances for the same original network must be equal. Using the example circuits from the last two sections, we can see that the two resistances are indeed equal:

Thevenin Equivalent Circuit

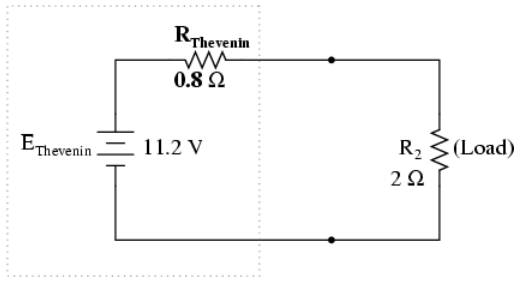

Norton Equivalent Circuit

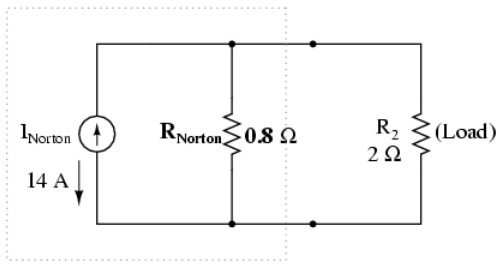

$$R_{Thevenin} = R_{Norton}$$

Considering the fact that both Thevenin and Norton equivalent circuits are intended to behave the same as the original network in supplying voltage and current to the load resistor (as seen from the perspective of the load connection points), these two equivalent circuits, having been derived from the same original network should behave identically.

This means that both Thevenin and Norton equivalent circuits should produce the same voltage across the load terminals with no load resistor attached. With the Thevenin equivalent, the open-circuited voltage would be equal to the Thevenin source voltage (no circuit current present to drop voltage across the series resistor), which is 11.2 volts in this case. With the Norton equivalent circuit, all 14 amps from the Norton current source would have to flow through the 0.8 Ω Norton resistance, producing the exact same voltage, 11.2 volts (E=IR). Thus, we can say that the Thevenin voltage is equal to the Norton current times the Norton resistance:

$$E_{Thevenin} = I_{Norton}R_{Norton}$$

So, if we wanted to convert a Norton equivalent circuit to a Thevenin equivalent circuit, we could use the same resistance and calculate the Thevenin voltage with Ohm's Law.

Conversely, both Thevenin and Norton equivalent circuits should generate the same amount of current through a short circuit across the load terminals. With the Norton equivalent, the short-circuit current would be exactly equal to the Norton source current, which is 14 amps in this case. With the Thevenin equivalent, all 11.2 volts would be applied across the 0.8 Ω Thevenin resistance, producing the exact same current through the short, 14 amps (I=E/R). Thus, we can say that the Norton current is equal to the Thevenin voltage divided by the Thevenin resistance:

$$I_{Norton} = \frac{E_{Thevenin}}{R_{Thevenin}}$$

This equivalence between Thevenin and Norton circuits can be a useful tool in itself, as we shall see in the next section.

Review

- Thevenin and Norton resistances are equal.
- Thevenin voltage is equal to Norton current times Norton resistance.
- Norton current is equal to Thevenin voltage divided by Thevenin resistance.

This page titled 10.10: Thevenin-Norton Equivalencies is shared under a GNU Free Documentation License 1.3 license and was authored, remixed, and/or curated by Tony R. Kuphaldt (All About Circuits) via source content that was edited to the style and standards of the LibreTexts platform.

10.11: Millman's Theorem Revisited

You may have wondered where we got that strange equation for the determination of "Millman Voltage" across parallel branches of a circuit where each branch contains a series resistance and voltage source:

Millman's Theorem Equation

$$\frac{\frac{E_{B1}}{R_1} + \frac{E_{B2}}{R_2} + \frac{E_{B3}}{R_3}}{\frac{1}{R_1} + \frac{1}{R_2} + \frac{1}{R_3}} = \text{Voltage across all branches}$$

Parts of this equation seem familiar to equations we've seen before. For instance, the denominator of the large fraction looks conspicuously like the denominator of our parallel resistance equation. And, of course, the E/R terms in the numerator of the large fraction should give figures for current, Ohm's Law being what it is (I=E/R).

Now that we've covered Thevenin and Norton source equivalencies, we have the tools necessary to understand Millman's equation. What Millman's equation is actually doing is treating each branch (with its series voltage source and resistance) as a Thevenin equivalent circuit and then converting each one into equivalent Norton circuits.

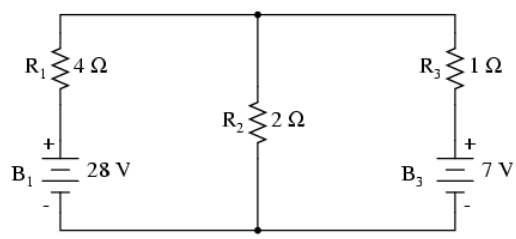

Thus, in the circuit above, battery B_1 and resistor R_1 are seen as a Thevenin source to be converted into a Norton source of 7 amps (28 volts / 4 Ω) in parallel with a 4 Ω resistor. The rightmost branch will be converted into a 7 amp current source (7 volts / 1 Ω) and 1 Ω resistor in parallel. The center branch, containing no voltage source at all, will be converted into a Norton source of 0 amps in parallel with a 2 Ω resistor:

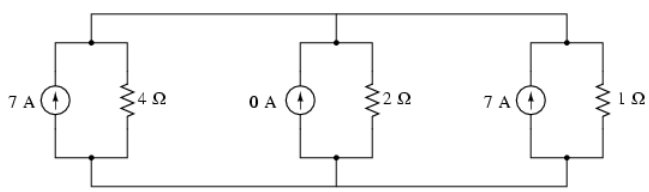

Since current sources directly add their respective currents in parallel, the total circuit current will be 7 + 0 + 7, or 14 amps. This addition of Norton source currents is what's being represented in the numerator of the Millman equation:

Millman's Theorem Equation

$$I_{total} = \frac{E_{B1}}{R_1} + \frac{E_{B2}}{R_2} + \frac{E_{B3}}{R_3} \longrightarrow \frac{\frac{E_{B1}}{R_1} + \frac{E_{B2}}{R_2} + \frac{E_{B3}}{R_3}}{\frac{1}{R_1} + \frac{1}{R_2} + \frac{1}{R_3}}$$

All the Norton resistances are in parallel with each other as well in the equivalent circuit, so they diminish to create a total resistance. This diminishing of source resistances is what's being represented in the denominator of the Millman's equation:

Millman's Theorem Equation

$$R_{total} = \frac{1}{\frac{1}{R_1} + \frac{1}{R_2} + \frac{1}{R_3}} \longrightarrow \frac{\frac{E_{B1}}{R_1} + \frac{E_{B2}}{R_2} + \frac{E_{B3}}{R_3}}{\frac{1}{R_1} + \frac{1}{R_2} + \frac{1}{R_3}}$$

In this case, the resistance total will be equal to 571.43 milliohms (571.43 mΩ). We can re-draw our equivalent circuit now as one with a single Norton current source and Norton resistance:

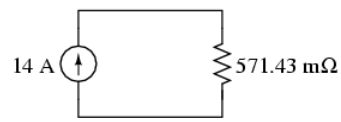

Ohm's Law can tell us the voltage across these two components now (E=IR):

$$E_{total} = (14\ A)(571.43\ m\Omega)$$

$$E_{total} = 8\ V$$

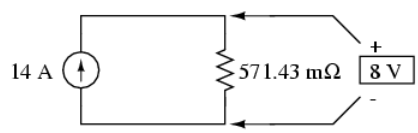

Let's summarize what we know about the circuit thus far. We know that the total current in this circuit is given by the sum of all the branch voltages divided by their respective resistances. We also know that the total resistance is found by taking the reciprocal of all the branch resistance reciprocals. Furthermore, we should be well aware of the fact that total voltage across all the branches can be found by multiplying total current by total resistance (E=IR). All we need to do is put together the two equations we had earlier for total circuit current and total resistance, multiplying them to find total voltage:

Ohm's Law: $I \times R = E$

(total current) x (total resistance) = (total voltage)

$$\frac{E_{B1}}{R_1} + \frac{E_{B2}}{R_2} + \frac{E_{B3}}{R_3} \quad x \quad \frac{1}{\frac{1}{R_1} + \frac{1}{R_2} + \frac{1}{R_3}} = \text{(total voltage)}$$

. . . or . . .

$$\frac{\frac{E_{B1}}{R_1} + \frac{E_{B2}}{R_2} + \frac{E_{B3}}{R_3}}{\frac{1}{R_1} + \frac{1}{R_2} + \frac{1}{R_3}} = \textbf{(total voltage)}$$

The Millman's equation is nothing more than a Thevenin-to-Norton conversion matched together with the parallel resistance formula to find total voltage across all the branches of the circuit. So, hopefully some of the mystery is gone now!

This page titled 10.11: Millman's Theorem Revisited is shared under a GNU Free Documentation License 1.3 license and was authored, remixed, and/or curated by Tony R. Kuphaldt (All About Circuits) via source content that was edited to the style and standards of the LibreTexts platform.

10.12: Maximum Power Transfer Theorem

This is essentially what is aimed for in radio transmitter design, where the antenna or transmission line “impedance” is matched to final power amplifier “impedance” for maximum radio frequency power output. Impedance, the overall opposition to AC and DC current, is very similar to resistance and must be equal between source and load for the greatest amount of power to be transferred to the load. A load impedance that is too high will result in low power output. A load impedance that is too low will not only result in low power output but possibly overheating of the amplifier due to the power dissipated in its internal (Thevenin or Norton) impedance.

Maximum Power Transfer Example

Taking our Thevenin equivalent example circuit, the Maximum Power Transfer Theorem tells us that the load resistance resulting in greatest power dissipation is equal in value to the Thevenin resistance (in this case, 0.8 Ω):

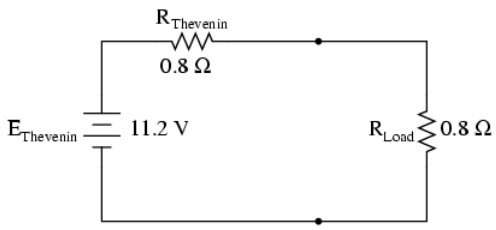

With this value of load resistance, the dissipated power will be 39.2 watts:

	$R_{Thevenin}$	R_{Load}	Total	
E	5.6	5.6	11.2	Volts
I	7	7	7	Amps
R	0.8	0.8	1.6	Ohms
P	39.2	**39.2**	78.4	Watts

If we were to try a lower value for the load resistance (0.5 Ω instead of 0.8 Ω, for example), our power dissipated by the load resistance would decrease:

	$R_{Thevenin}$	R_{Load}	Total	
E	6.892	4.308	11.2	Volts
I	8.615	8.615	8.615	Amps
R	0.8	0.5	1.3	Ohms
P	59.38	**37.11**	96.49	Watts

Power dissipation increased for both the Thevenin resistance and the total circuit, but it decreased for the load resistor. Likewise, if we increase the load resistance (1.1 Ω instead of 0.8 Ω, for example), power dissipation will also be less than it was at 0.8 Ω exactly:

	$R_{Thevenin}$	R_{Load}	Total	
E	4.716	6.484	11.2	Volts
I	5.895	5.895	5.895	Amps
R	0.8	1.1	1.9	Ohms
P	27.80	**38.22**	66.02	Watts

If you were designing a circuit for maximum power dissipation at the load resistance, this theorem would be very useful. Having reduced a network down to a Thevenin voltage and resistance (or Norton current and resistance), you simply set the load resistance equal to that Thevenin or Norton equivalent (or vice versa) to ensure maximum power dissipation at the load. Practical applications of this might include radio transmitter final amplifier stage design (seeking to maximize power delivered to the antenna or

transmission line), a *grid-tied inverter* loading a solar array, or electric vehicle design (seeking to maximize power delivered to drive motor).

Maximum Power Doesn't Mean Maximum Efficiency

Maximum power transfer does not coincide with maximum efficiency. Application of The Maximum Power Transfer theorem to AC power distribution will not result in maximum or even high efficiency. The goal of high efficiency is more important for AC power distribution, which dictates a relatively low generator impedance compared to the load impedance.

Similar to AC power distribution, high fidelity audio amplifiers are designed for a relatively low output impedance and a relatively high speaker load impedance. As a ratio, "output impedance" : "load impedance" is known as *damping factor*, typically in the range of 100 to 1000.

Maximum power transfer does not coincide with the goal of lowest noise. For example, the low-level radio frequency amplifier between the antenna and a radio receiver is often designed for lowest possible noise. This often requires a mismatch of the amplifier input impedance to the antenna as compared with that dictated by the maximum power transfer theorem.

Review

- The *Maximum Power Transfer Theorem* states that the maximum amount of power will be dissipated by a load resistance if it is equal to the Thevenin or Norton resistance of the network supplying power.
- The Maximum Power Transfer Theorem does **not** satisfy the goal of maximum efficiency.

This page titled 10.12: Maximum Power Transfer Theorem is shared under a GNU Free Documentation License 1.3 license and was authored, remixed, and/or curated by Tony R. Kuphaldt (All About Circuits) via source content that was edited to the style and standards of the LibreTexts platform.

10.13: Δ-Y and Y-Δ Conversions

In many circuit applications, we encounter components connected together in one of two ways to form a three-terminal network: the "Delta," or Δ (also known as the "Pi," or π) configuration, and the "Y" (also known as the "T") configuration.

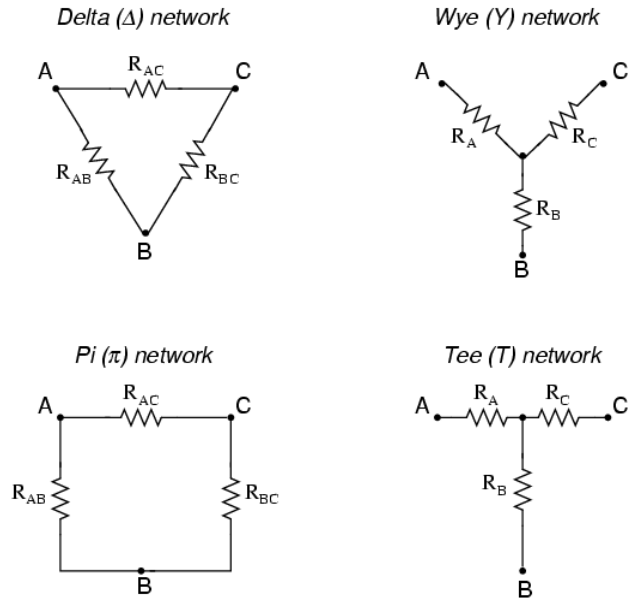

It is possible to calculate the proper values of resistors necessary to form one kind of network (Δ or Y) that behaves identically to the other kind, as analyzed from the terminal connections alone. That is, if we had two separate resistor networks, one Δ and one Y, each with its resistors hidden from view, with nothing but the three terminals (A, B, and C) exposed for testing, the resistors could be sized for the two networks so that there would be no way to electrically determine one network apart from the other. In other words, equivalent Δ and Y networks behave identically.

There are several equations used to convert one network to the other:

To convert a Delta (Δ) to a Wye (Y)

$$R_A = \frac{R_{AB}\,R_{AC}}{R_{AB} + R_{AC} + R_{BC}}$$

$$R_B = \frac{R_{AB}\,R_{BC}}{R_{AB} + R_{AC} + R_{BC}}$$

$$R_C = \frac{R_{AC}\,R_{BC}}{R_{AB} + R_{AC} + R_{BC}}$$

To convert a Wye (Y) to a Delta (Δ)

$$R_{AB} = \frac{R_AR_B + R_AR_C + R_BR_C}{R_C}$$

$$R_{BC} = \frac{R_AR_B + R_AR_C + R_BR_C}{R_A}$$

$$R_{AC} = \frac{R_AR_B + R_AR_C + R_BR_C}{R_B}$$

Δ and Y networks are seen frequently in 3-phase AC power systems (a topic covered in volume II of this book series), but even then they're usually balanced networks (all resistors equal in value) and conversion from one to the other need not involve such complex calculations. When would the average technician ever need to use these equations?

A prime application for Δ-Y conversion is in the solution of unbalanced bridge circuits, such as the one below:

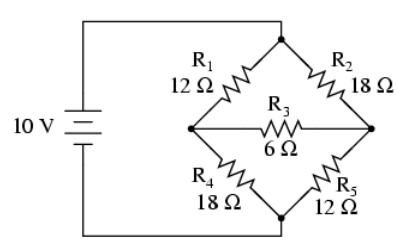

Solution of this circuit with Branch Current or Mesh Current analysis is fairly involved, and neither the Millman nor Superposition Theorems are of any help, since there's only one source of power. We could use Thevenin's or Norton's Theorem, treating R_3 as our

load, but what fun would that be?

If we were to treat resistors R_1, R_2, and R_3 as being connected in a Δ configuration (R_{ab}, R_{ac}, and R_{bc}, respectively) and generate an equivalent Y network to replace them, we could turn this bridge circuit into a (simpler) series/parallel combination circuit:

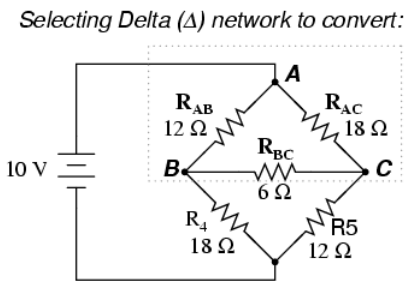

After the Δ-Y conversion . . .

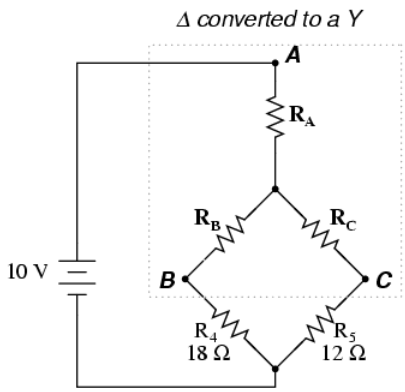

If we perform our calculations correctly, the voltages between points A, B, and C will be the same in the converted circuit as in the original circuit, and we can transfer those values back to the original bridge configuration.

$$R_A = \frac{(12\ \Omega)(18\ \Omega)}{(12\ \Omega) + (18\ \Omega) + (6\ \Omega)} = \frac{216}{36} = \mathbf{6\ \Omega}$$

$$R_B = \frac{(12\ \Omega)(6\ \Omega)}{(12\ \Omega) + (18\ \Omega) + (6\ \Omega)} = \frac{72}{36} = \mathbf{2\ \Omega}$$

$$R_C = \frac{(18\ \Omega)(6\ \Omega)}{(12\ \Omega) + (18\ \Omega) + (6\ \Omega)} = \frac{108}{36} = \mathbf{3\ \Omega}$$

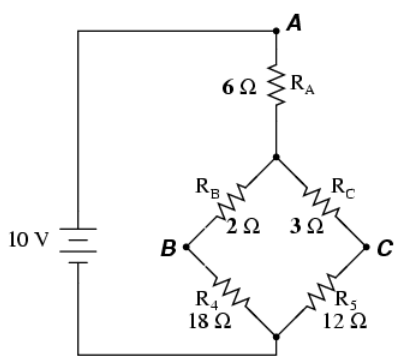

Resistors R_4 and R_5, of course, remain the same at 18 Ω and 12 Ω, respectively. Analyzing the circuit now as a series/parallel combination, we arrive at the following figures:

	R_A	R_B	R_C	R_4	R_5	
E	4.118	588.24m	1.176	5.294	4.706	Volts
I	686.27m	294.12m	392.16m	294.12m	392.16m	Amps
R	6	2	3	18	12	Ohms

	$R_B + R_4$	$R_C + R_5$	$R_B + R_4$ // $R_C + R_5$	Total	
E	5.882	5.882	5.882	10	Volts
I	294.12m	392.16m	686.27m	686.27m	Amps
R	20	15	8.571	14.571	Ohms

We must use the voltage drops figures from the table above to determine the voltages between points A, B, and C, seeing how the add up (or subtract, as is the case with voltage between points B and C):

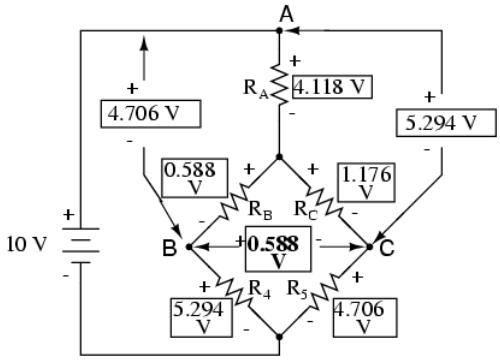

$$E_{A\text{-}B} = 4.706 \text{ V}$$

$$E_{A\text{-}C} = 5.294 \text{ V}$$

$$E_{B\text{-}C} = 588.24 \text{ mV}$$

Now that we know these voltages, we can transfer them to the same points A, B, and C in the original bridge circuit:

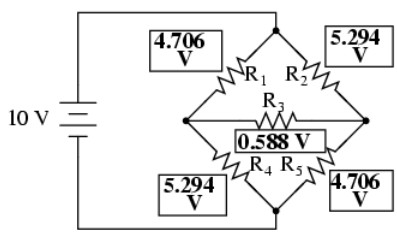

Voltage drops across R_4 and R_5, of course, are exactly the same as they were in the converted circuit.

At this point, we could take these voltages and determine resistor currents through the repeated use of Ohm's Law (I=E/R):

$$I_{R1} = \frac{4.706 \text{ V}}{12\ \Omega} = 392.16 \text{ mA}$$

$$I_{R2} = \frac{5.294 \text{ V}}{18\ \Omega} = 294.12 \text{ mA}$$

$$I_{R3} = \frac{588.24 \text{ mV}}{6\ \Omega} = 98.04 \text{ mA}$$

$$I_{R4} = \frac{5.294 \text{ V}}{18\ \Omega} = 294.12 \text{ mA}$$

$$I_{R5} = \frac{4.706 \text{ V}}{12\ \Omega} = 392.16 \text{ mA}$$

A quick simulation with SPICE will serve to verify our work:

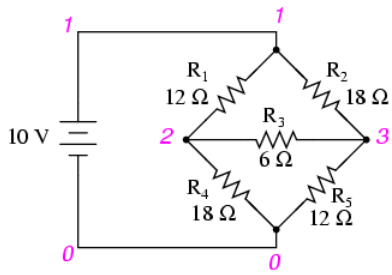


```
unbalanced bridge circuit
v1 1 0
r1 1 2 12
r2 1 3 18
r3 2 3 6
r4 2 0 18
r5 3 0 12
.dc v1 10 10 1
.print dc v(1,2) v(1,3) v(2,3) v(2,0) v(3,0)
.end
v1            v(1,2)      v(1,3)      v(2,3)      v(2)        v(3)
1.000E+01     4.706E+00   5.294E+00   5.882E-01   5.294E+00   4.706E+00
```

The voltage figures, as read from left to right, represent voltage drops across the five respective resistors, R_1 through R_5. I could have shown currents as well, but since that would have required insertion of "dummy" voltage sources in the SPICE netlist, and since we're primarily interested in validating the Δ-Y conversion equations and not Ohm's Law, this will suffice.

Review

- "Delta" (Δ) networks are also known as "Pi" (π) networks.
- "Y" networks are also known as "T" networks.
- Δ and Y networks can be converted to their equivalent counterparts with the proper resistance equations. By "equivalent," I mean that the two networks will be electrically identical as measured from the three terminals (A, B, and C).
- A bridge circuit can be simplified to a series/parallel circuit by converting half of it from a Δ to a Y network. After voltage drops between the original three connection points (A, B, and C) have been solved for, those voltages can be transferred back to the original bridge circuit, across those same equivalent points.

This page titled 10.13: Δ-Y and Y-Δ Conversions is shared under a GNU Free Documentation License 1.3 license and was authored, remixed, and/or curated by Tony R. Kuphaldt (All About Circuits) via source content that was edited to the style and standards of the LibreTexts platform.

CHAPTER OVERVIEW

11: Batteries And Power Systems

11.1: Electron Activity in Chemical Reactions

11.2: Battery Construction

11.3: Battery Ratings

11.4: Special-purpose Batteries

11.5: Practical Considerations - Batteries

This page titled 11: Batteries And Power Systems is shared under a GNU Free Documentation License 1.3 license and was authored, remixed, and/or curated by Tony R. Kuphaldt (All About Circuits) via source content that was edited to the style and standards of the LibreTexts platform.

11.1: Electron Activity in Chemical Reactions

In the first chapter of this book, the concept of an *atom* was discussed, as being the basic building-block of all material objects. Atoms, in turn, are composed of even smaller pieces of matter called *particles*. Electrons, protons, and neutrons are the basic types of particles found in atoms. Each of these particle types plays a distinct role in the behavior of an atom. While electrical activity involves the motion of electrons, the chemical identity of an atom (which largely determines how conductive the material will be) is determined by the number of protons in the nucleus (center).

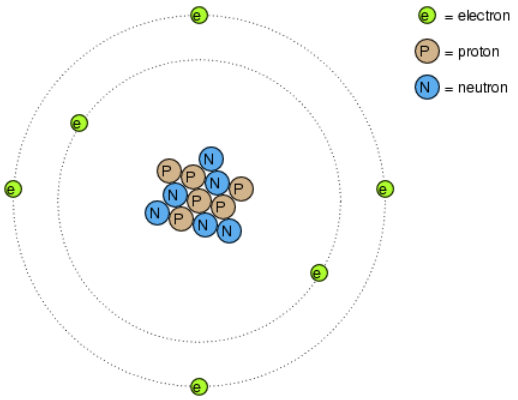

The protons in an atom's nucleus are extremely difficult to dislodge, and so the chemical identity of any atom is very stable. One of the goals of the ancient alchemists (to turn lead into gold) was foiled by this sub-atomic stability. All efforts to alter this property of an atom by means of heat, light, or friction were met with failure. The electrons of an atom, however, are much more easily dislodged. As we have already seen, friction is one way in which electrons can be transferred from one atom to another (glass and silk, wax and wool), as well as heat (generating voltage by heating a junction of dissimilar metals, as in the case of thermocouples).

Electrons can do much more than just move around and between atoms: they can also serve to link different atoms together. This linking of atoms by electrons is called a *chemical bond*. A crude (and simplified) representation of such a bond between two atoms might look like this:

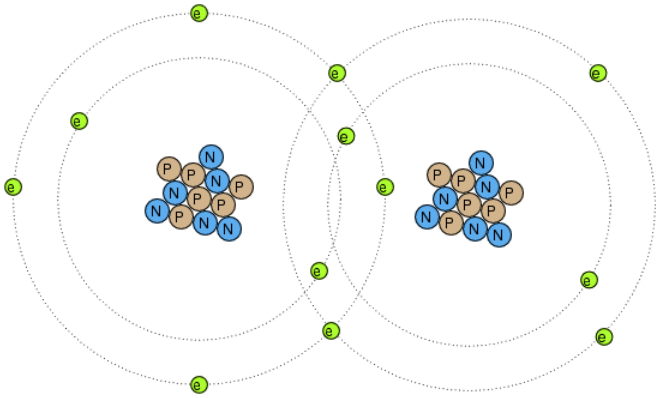

There are several types of chemical bonds, the one shown above being representative of a *covalent* bond, where electrons are shared between atoms. Because chemical bonds are based on links formed by electrons, these bonds are only as strong as the immobility of the electrons forming them. That is to say, chemical bonds can be created or broken by the same forces that force electrons to move: heat, light, friction, etc.

When atoms are joined by chemical bonds, they form materials with unique properties known as *molecules*. The dual-atom picture shown above is an example of a simple molecule formed by two atoms of the same type. Most molecules are unions of different types of atoms. Even molecules formed by atoms of the same type can have radically different physical properties. Take the element carbon, for instance: in one form, *graphite*, carbon atoms link together to form flat "plates" which slide against one another very easily, giving graphite its natural lubricating properties. In another form, *diamond*, the same carbon atoms link together in a

different configuration, this time in the shapes of interlocking pyramids, forming a material of exceeding hardness. In yet another form, *Fullerene*, dozens of carbon atoms form each molecule, which looks something like a soccer ball. Fullerene molecules are very fragile and lightweight. The airy soot formed by excessively rich combustion of acetylene gas (as in the initial ignition of an oxy-acetylene welding/cutting torch) contains many Fullerene molecules.

When alchemists succeeded in changing the properties of a substance by heat, light, friction, or mixture with other substances, they were really observing changes in the types of molecules formed by atoms breaking and forming bonds with other atoms. Chemistry is the modern counterpart to alchemy and concerns itself primarily with the properties of these chemical bonds and the reactions associated with them.

A type of chemical bond of particular interest to our study of batteries is the so-called *ionic* bond, and it differs from the *covalent* bond in that one atom of the molecule possesses an excess of electrons while another atom lacks electrons, the bonds between them being a result of the electrostatic attraction between the two unlike charges.

When ionic bonds are formed from neutral atoms, there is a transfer of electrons between the positively and negatively charged atoms. An atom that gains an excess of electrons is said to be *reduced*; an atom with a deficiency of electrons is said to be *oxidized*. A mnemonic to help remember the definitions is OIL RIG (oxidized is less; reduced is gained). It is important to note that molecules will often contain both ionic and covalent bonds. Sodium hydroxide (lye, NaOH) has an ionic bond between the sodium atom (positive) and the hydroxyl ion (negative). The hydroxyl ion has a covalent bond (shown as a bar) between the hydrogen and oxygen atoms:

Na^+ O—H^- Sodium only loses one electron, so its charge is +1 in the above example. If an atom loses more than one electron, the resulting charge can be indicated as +2, +3, +4, etc. or by a Roman numeral in parentheses showing the oxidation state, such as (I), (II), (IV), etc. Some atoms can have multiple oxidation states, and it is sometimes important to include the oxidation state in the molecular formula to avoid ambiguity.

The formation of ions and ionic bonds from neutral atoms or molecules (or *vice versa*) involves the transfer of electrons. That transfer of electrons can be harnessed to generate an electric current.A device constructed to do just this is called a *voltaic cell*, or *cell* for short, usually consisting of two metal electrodes immersed in a chemical mixture (called an *electrolyte*) designed to facilitate such an electrochemical (oxidation/reduction) reaction:

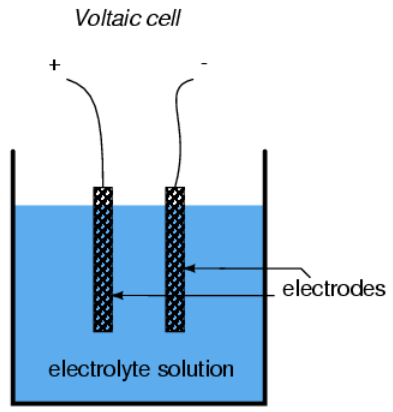

The two electrodes are made of different materials, both of which chemically react with the electrolyte in some form of ionic bonding.

In the common “lead-acid” cell (the kind commonly used in automobiles), the negative electrode is made of lead (Pb) and the positive is made of lead (IV) dioxide (PbO_2), both metallic substances. It is important to note that lead dioxide is metallic and is an electrical conductor, unlike other metal oxides that are usually insulators. (note: Table below) The electrolyte solution is a dilute sulfuric acid (H_2SO_4 + H_2O). If the electrodes of the cell are connected to an external circuit, such that electrons have a place to flow from one to the other, lead(IV) atoms in the positive electrode (PbO_2) will gain two electrons each to produce Pb(II)O. The oxygen atoms which are “left over” combine with positively charged hydrogen ions $(H)^+$to form water (H_2O). This flow of electrons into into the lead dioxide (PbO_2) electrode, gives it a positive electrical charge. Consequently, lead atoms in the negative electrode give up two electrons each to produce lead Pb(II), which combines with sulfate ions (SO_4^{-2}) produced from the

disassociation of the hydrogen ions (H^+) from the sulfuric acid (H_2SO_4) to form lead sulfate ($PbSO_4$). The flow of electrons out of the lead electrode gives it a negative electrical charge. These reactions are shown diagrammatically below:

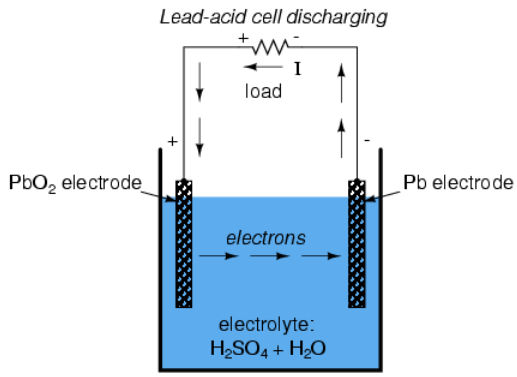

At (+) electrode:	$Pb(IV)O_2 + 3H^+ + HSO_4^- + 2e^-$	$\longrightarrow$	$Pb(II)SO_4 + 2H_2O$
At (-) electrode:	$Pb + HSO_4^-$	$\longrightarrow$	$Pb(II)SO_4 + H^+ + 2e^-$
Overall cell:	$PbO_2 + Pb + 2H_2SO_4$	$\longrightarrow$	$2PbSO_4 + 2H_2O$

Note on lead oxide nomenclature:

> The nomenclature for lead oxides can be confusing. The term, lead oxide can refer to either Pb(II)O or $Pb(IV)O_2$, and the correct compound can be determined usually from context. Other synonyms for $Pb(IV)O_2$ are: lead dioxide, lead peroxide, plumbic oxide, lead oxide brown, and lead superoxide. The term, lead peroxide is particularly confusing, as it implies a compound of lead (II) with two oxygen atoms, Pb(II)O2, which apparently does not exist. Unfortunately, the term lead peroxide has persisted in industrial literature. In this section, lead dioxide will be used to refer to Pb(IV)O2, and lead oxide will refer to Pb(II)O. The oxidation states will not be shown usually.

This process of the cell providing electrical energy to supply a load is called *discharging* since it is depleting its internal chemical reserves. Theoretically, after all of the sulfuric acid has been exhausted, the result will be two electrodes of lead sulfate ($PbSO_4$) and an electrolyte solution of pure water (H_2O), leaving no more capacity for additional ionic bonding. In this state, the cell is said to be *fully discharged*. In a lead-acid cell, the state of charge can be determined by an analysis of acid strength. This is easily accomplished with a device called a *hydrometer*, which measures the specific gravity (density) of the electrolyte. Sulfuric acid is denser than water, so the greater the charge of a cell, the greater the acid concentration, and thus a denser electrolyte solution.

There is no single chemical reaction representative of all voltaic cells, so any detailed discussion of chemistry is bound to have limited application. The important thing to understand is that electrons are motivated to and/or from the cell's electrodes via ionic reactions between the electrode molecules and the electrolyte molecules. The reaction is enabled when there is an external path for electric current and ceases when that path is broken.

Being that the motivation for electrons to move through a cell is chemical in nature, the amount of voltage (electromotive force) generated by any cell will be specific to the particular chemical reaction for that cell type. For instance, the lead-acid cell just described has a nominal voltage of 2.04 volts per cell, based on a fully "charged" cell (acid concentration strong) in good physical condition. There are other types of cells with different specific voltage outputs. The *Edison cell*, for example, with a positive electrode made of nickel oxide, a negative electrode made of iron, and an electrolyte solution of potassium hydroxide (a caustic, not acid, substance) generates a nominal voltage of only 1.2 volts, due to the specific differences in chemical reaction with those electrode and electrolyte substances.

The chemical reactions of some types of cells can be reversed by forcing electric current backward through the cell (*in* the negative electrode and *out* the positive electrode). This process is called *charging*. Any such (rechargeable) cell is called a *secondary cell*. A cell whose chemistry cannot be reversed by a reverse current is called a *primary cell*.

When a lead-acid cell is charged by an external current source, the chemical reactions experienced during discharge are reversed:

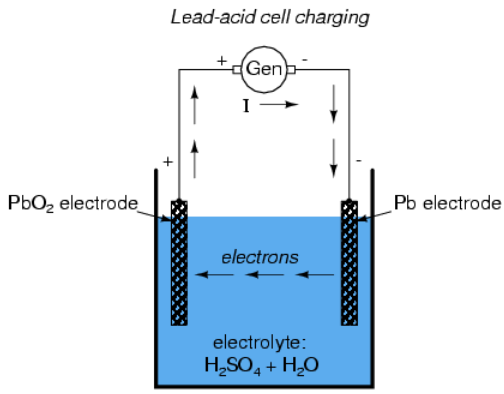

At (+) electrode: $Pb(II)SO_4 + 2H_2O \longrightarrow Pb(IV)O_2 + 3H^+ + HSO_4^- + 2e^-$

At (-) electrode: $Pb(II)SO_4 + H^+ + 2e^- \longrightarrow Pb + HSO_4^-$

Overall cell: $2PbSO_4 + 2H_2O \longrightarrow PbO_2 + Pb + 2H_2SO_4$

Review

- Atoms bound together by electrons are called *molecules*.
- *Ionic bonds* are molecular unions formed when an electron-deficient atom (a positive ion) joins with an electron-excessive atom (a negative ion).
- Electrochemical reactions involve the transfer of electrons between atoms. This transfer can be harnessed to form an electric current.
- A *cell* is a device constructed to harness such chemical reactions to generate electric current.
- A cell is said to be *discharged* when its internal chemical reserves have been depleted through use.
- A *secondary* cell's chemistry can be reversed (recharged) by forcing current backward through it.
- A *primary* cell cannot be practically recharged.
- Lead-acid cell charge can be assessed with an instrument called a *hydrometer*, which measures the density of the electrolyte liquid. The denser the electrolyte, the stronger the acid concentration, and the greater charge state of the cell.

This page titled 11.1: Electron Activity in Chemical Reactions is shared under a GNU Free Documentation License 1.3 license and was authored, remixed, and/or curated by Tony R. Kuphaldt (All About Circuits) via source content that was edited to the style and standards of the LibreTexts platform.

11.2: Battery Construction

The symbol for a cell is very simple, consisting of one long line and one short line, parallel to each other, with connecting wires:

Cell

The symbol for a battery is nothing more than a couple of cell symbols stacked in series:

Battery

As was stated before, the voltage produced by any particular kind of cell is determined strictly by the chemistry of that cell type. The size of the cell is irrelevant to its voltage. To obtain greater voltage than the output of a single cell, multiple cells must be connected in series. The total voltage of a battery is the sum of all cell voltages. A typical automotive lead-acid battery has six cells, for a nominal voltage output of 6 x 2.0 or 12.0 volts:

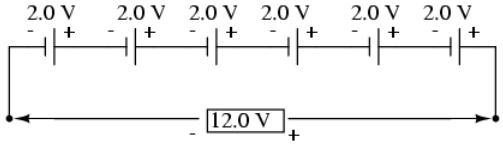

The cells in an automotive battery are contained within the same hard rubber housing, connected together with thick, lead bars instead of wires. The electrodes and electrolyte solutions for each cell are contained in separate, partitioned sections of the battery case. In large batteries, the electrodes commonly take the shape of thin metal grids or plates, and are often referred to as *plates* instead of electrodes.

For the sake of convenience, battery symbols are usually limited to four lines, alternating long/short, although the real battery it represents may have many more cells than that. On occasion, however, you might come across a symbol for a battery with unusually high voltage, intentionally drawn with extra lines. The lines, of course, are representative of the individual cell plates:

symbol for a battery with an unusually high voltage

If the physical size of a cell has no impact on its voltage, then what does it affect? The answer is resistance, which in turn affects the maximum amount of current that a cell can provide. Every voltaic cell contains some amount of internal resistance due to the electrodes and the electrolyte. The larger a cell is constructed, the greater the electrode contact area with the electrolyte, and thus the less internal resistance it will have.

Although we generally consider a cell or battery in a circuit to be a perfect source of voltage (absolutely constant), the current through it dictated solely by the *external* resistance of the circuit to which it is attached, this is not entirely true in real life. Since every cell or battery contains some internal resistance, that resistance must affect the current in any given circuit:

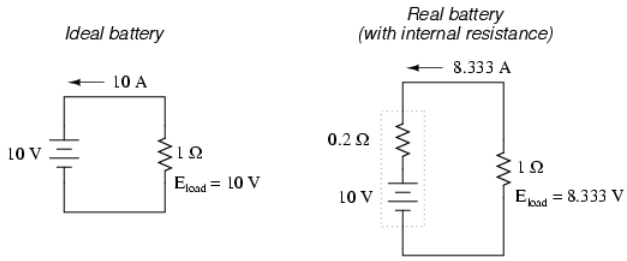

The real battery shown above within the dotted lines has an internal resistance of 0.2 Ω, which affects its ability to supply current to the load resistance of 1 Ω. The ideal battery on the left has no internal resistance, and so our Ohm's Law calculations for current (I=E/R) give us a perfect value of 10 amps for current with the 1 ohm load and 10 volt supply. The real battery, with its built-in resistance further impeding the flow of electrons, can only supply 8.333 amps to the same resistance load.

The ideal battery, in a short circuit with 0 Ω resistance, would be able to supply an infinite amount of current. The real battery, on the other hand, can only supply 50 amps (10 volts / 0.2 Ω) to a short circuit of 0 Ω resistance, due to its internal resistance. The chemical reaction inside the cell may still be providing exactly 10 volts, but voltage is dropped across that internal resistance as electrons flow through the battery, which reduces the amount of voltage available at the battery terminals to the load.

Since we live in an imperfect world, with imperfect batteries, we need to understand the implications of factors such as internal resistance. Typically, batteries are placed in applications where their internal resistance is negligible compared to that of the circuit load (where their short-circuit current far exceeds their usual load current), and so the performance is very close to that of an ideal voltage source.

If we need to construct a battery with lower resistance than what one cell can provide (for greater current capacity), we will have to connect the cells together in parallel:

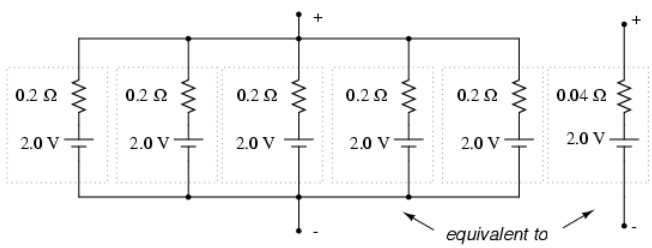

Essentially, what we have done here is determine the Thevenin equivalent of the five cells in parallel (an equivalent network of one voltage source and one series resistance). The equivalent network has the same source voltage but a fraction of the resistance of any individual cell in the original network. The overall effect of connecting cells in parallel is to decrease the equivalent internal resistance, just as resistors in parallel diminish in total resistance. The equivalent internal resistance of this battery of 5 cells is 1/5 that of each individual cell. The overall voltage stays the same: 2.0 volts. If this battery of cells were powering a circuit, the current through each cell would be 1/5 of the total circuit current, due to the equal split of current through equal-resistance parallel branches.

Review

- A *battery* is a cluster of cells connected together for greater voltage and/or current capacity.
- Cells connected together in series (polarities aiding) results in greater total voltage.
- Physical cell size impacts cell resistance, which in turn impacts the ability for the cell to supply current to a circuit. Generally, the larger the cell, the less its internal resistance.
- Cells connected together in parallel results in less total resistance, and potentially greater total current.

This page titled 11.2: Battery Construction is shared under a GNU Free Documentation License 1.3 license and was authored, remixed, and/or curated by Tony R. Kuphaldt (All About Circuits) via source content that was edited to the style and standards of the LibreTexts platform.

11.3: Battery Ratings

A battery with a capacity of 1 amp-hour should be able to continuously supply a current of 1 amp to a load for exactly 1 hour, or 2 amps for 1/2 hour, or 1/3 amp for 3 hours, etc., before becoming completely discharged. In an ideal battery, this relationship between continuous current and discharge time is stable and absolute, but real batteries don't behave exactly as this simple linear formula would indicate. Therefore, when amp-hour capacity is given for a battery, it is specified at either a given current, given time, or assumed to be rated for a time period of 8 hours (if no limiting factor is given).

For example, an average automotive battery might have a capacity of about 70 amp-hours, specified at a current of 3.5 amps. This means that the amount of time this battery could continuously supply a current of 3.5 amps to a load would be 20 hours (70 amp-hours / 3.5 amps). But let's suppose that a lower-resistance load were connected to that battery, drawing 70 amps continuously. Our amp-hour equation tells us that the battery should hold out for exactly 1 hour (70 amp-hours / 70 amps), but this might not be true in real life. With higher currents, the battery will dissipate more heat across its internal resistance, which has the effect of altering the chemical reactions taking place within. Chances are, the battery would fully discharge some time *before* the calculated time of 1 hour under this greater load.

Conversely, if a very light load (1 mA) were to be connected to the battery, our equation would tell us that the battery should provide power for 70,000 hours, or just under 8 years (70 amp-hours / 1 milliamp), but the odds are that much of the chemical energy in a real battery would have been drained due to other factors (evaporation of electrolyte, deterioration of electrodes, leakage current within battery) long before 8 years had elapsed. Therefore, we must take the amp-hour relationship as being an ideal approximation of battery life, the amp-hour rating trusted only near the specified current or timespan given by the manufacturer. Some manufacturers will provide amp-hour derating factors specifying reductions in total capacity at different levels of current and/or temperature.

For secondary cells, the amp-hour rating provides a rule for necessary charging time at any given level of charge current. For example, the 70 amp-hour automotive battery in the previous example should take 10 hours to charge from a fully-discharged state at a constant charging current of 7 amps (70 amp-hours / 7 amps).

Approximate amp-hour capacities of some common batteries are given here:

- Typical automotive battery: 70 amp-hours @ 3.5 A *(secondary cell)*
- D-size carbon-zinc battery: 4.5 amp-hours @ 100 mA *(primary cell)*
- 9 volt carbon-zinc battery: 400 milliamp-hours @ 8 mA *(primary cell)*

As a battery discharges, not only does it diminish its internal store of energy, but its internal resistance also increases (as the electrolyte becomes less and less conductive), and its open-circuit cell voltage decreases (as the chemicals become more and more dilute). The most deceptive change that a discharging battery exhibits is increased resistance. The best check for a battery's condition is a voltage measurement *under load*, while the battery is supplying a substantial current through a circuit. Otherwise, a simple voltmeter check across the terminals may falsely indicate a healthy battery (adequate voltage) even though the internal resistance has increased considerably. What constitutes a "substantial current" is determined by the battery's design parameters. A voltmeter check revealing too low of a voltage, of course, would positively indicate a discharged battery:

Fully charged battery:

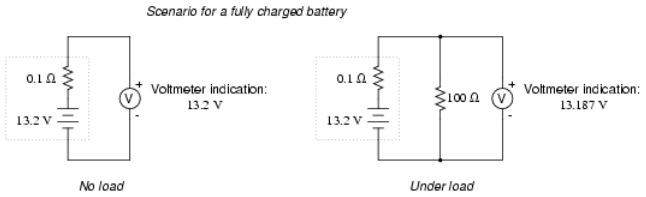

Now, if the battery discharges a bit . . .

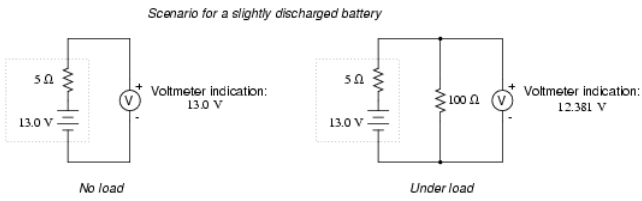

and discharges a bit further . . .

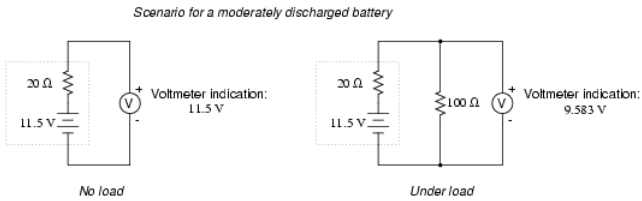

and a bit further until its dead.

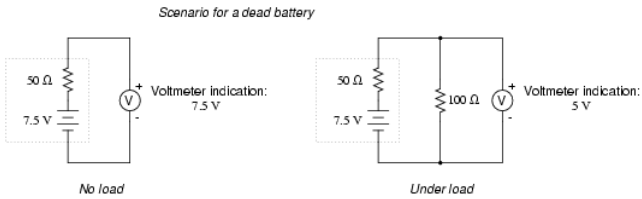

Notice how much better the battery's true condition is revealed when its voltage is checked under load as opposed to without a load. Does this mean that its pointless to check a battery with just a voltmeter (no load)? Well, no. If a simple voltmeter check reveals only 7.5 volts for a 13.2 volt battery, then you know without a doubt that its dead. However, if the voltmeter were to indicate 12.5 volts, it may be near full charge or somewhat depleted—you couldn't tell without a load check. Bear in mind also that the resistance used to place a battery under load must be rated for the amount of power expected to be dissipated. For checking large batteries such as an automobile (12 volt nominal) lead-acid battery, this may mean a resistor with a power rating of several hundred watts.

Review

- The *amp-hour* is a unit of battery energy capacity, equal to the amount of continuous current multiplied by the discharge time, that a battery can supply before exhausting its internal store of chemical energy.

$$\text{Continuous current (in Amps)} = \frac{\text{Amp-hour rating}}{\text{Charge/discharge time (in hours)}}$$

$$\text{Charge/discharge time (in hours)} = \frac{\text{Amp-hour rating}}{\text{Continuous current (in Amps)}}$$

- An amp-hour battery rating is only an approximation of the battery's charge capacity, and should be trusted only at the current level or time specified by the manufacturer. Such a rating cannot be extrapolated for very high currents or very long times with any accuracy.
- Discharged batteries lose voltage and increase in resistance. The best check for a dead battery is a voltage test under load.

This page titled 11.3: Battery Ratings is shared under a GNU Free Documentation License 1.3 license and was authored, remixed, and/or curated by Tony R. Kuphaldt (All About Circuits) via source content that was edited to the style and standards of the LibreTexts platform.

11.4: Special-purpose Batteries

Back in the early days of electrical measurement technology, a special type of battery known as a *mercury standard cell* was popularly used as a voltage calibration standard. The output of a mercury cell was 1.0183 to 1.0194 volts DC (depending on the specific design of cell), and was extremely stable over time. Advertised drift was around 0.004 percent of rated voltage per year. Mercury standard cells were sometimes known as *Weston cells* or *cadmium cells*.

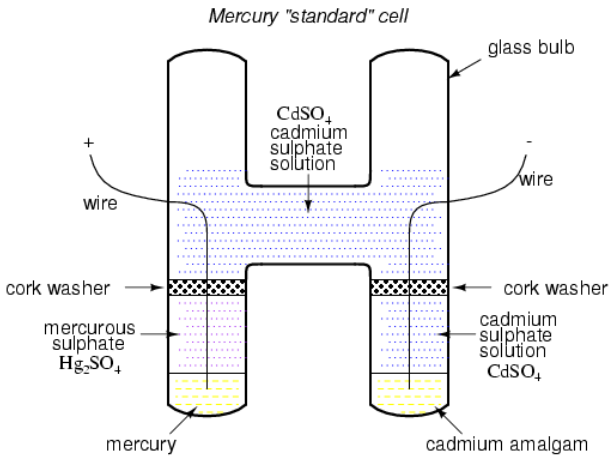

Unfortunately, mercury cells were rather intolerant of any current drain and could not even be measured with an analog voltmeter without compromising accuracy. Manufacturers typically called for no more than 0.1 mA of current through the cell, and even that figure was considered a *momentary*, or *surge* maximum! Consequently, standard cells could only be measured with a potentiometric (null-balance) device where current drain is almost zero. Short-circuiting a mercury cell was prohibited, and once short-circuited, the cell could never be relied upon again as a standard device.

Mercury standard cells were also susceptible to slight changes in voltage if physically or thermally disturbed. Two different types of mercury standard cells were developed for different calibration purposes: *saturated* and *unsaturated*. Saturated standard cells provided the greatest voltage stability over time, at the expense of thermal instability. In other words, their voltage drifted very little with the passage of time (just a few microvolts over the span of a decade!), but tended to vary with changes in temperature (tens of microvolts per degree Celsius). These cells functioned best in temperature-controlled laboratory environments where long-term stability is paramount. Unsaturated cells provided thermal stability at the expense of stability over time, the voltage remaining virtually constant with changes in temperature but decreasing steadily by about 100 µV every year. These cells functioned best as "field" calibration devices where ambient temperature is not precisely controlled. Nominal voltage for a saturated cell was 1.0186 volts, and 1.019 volts for an unsaturated cell.

Modern semiconductor voltage (zener diode regulator) references have superseded standard cell batteries as laboratory and field voltage standards.

A fascinating device closely related to primary-cell batteries is the *fuel cell*, so-called because it harnesses the chemical reaction of combustion to generate an electric current. The process of chemical oxidation (oxygen ionically bonding with other elements) is capable of producing an electron flow between two electrodes just as well as any combination of metals and electrolytes. A fuel cell can be thought of as a battery with an externally supplied chemical energy source.

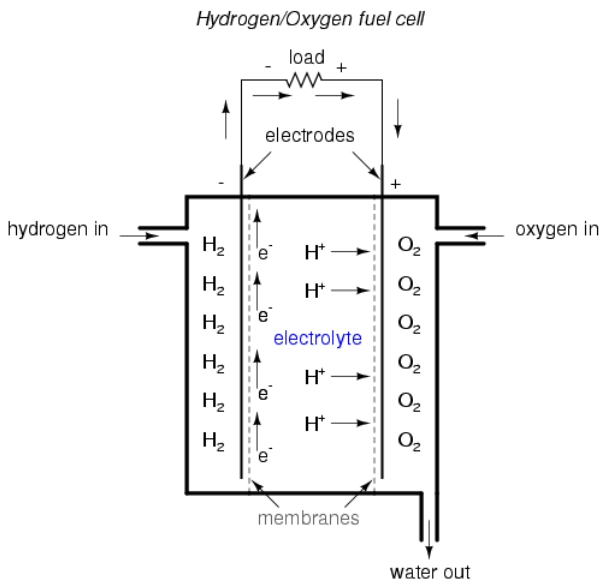

To date, the most successful fuel cells constructed are those which run on hydrogen and oxygen, although much research has been done on cells using hydrocarbon fuels. While "burning" hydrogen, a fuel cell's only waste byproducts are water and a small amount of heat. When operating on carbon-containing fuels, carbon dioxide is also released as a byproduct. Because the operating temperature of modern fuel cells is far below that of normal combustion, no oxides of nitrogen (NO_x) are formed, making it far less polluting, all other factors being equal.

The efficiency of energy conversion in a fuel cell from chemical to electrical far exceeds the theoretical Carnot efficiency limit of any internal-combustion engine, which is an exciting prospect for power generation and hybrid electric automobiles.

Another type of "battery" is the *solar cell*, a by-product of the semiconductor revolution in electronics. The *photoelectric effect*, whereby electrons are dislodged from atoms under the influence of light, has been known in physics for many decades, but it has only been with recent advances in semiconductor technology that a device existed capable of harnessing this effect to any practical degree. Conversion efficiencies for silicon solar cells are still quite low, but their benefits as power sources are legion: no moving parts, no noise, no waste products or pollution (aside from the manufacture of solar cells, which is still a fairly "dirty" industry), and indefinite life.

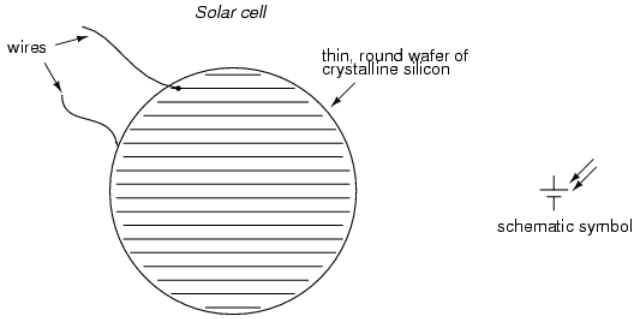

Specific cost of solar cell technology (dollars per kilowatt) is still very high, with little prospect of significant decrease barring some kind of revolutionary advance in technology. Unlike electronic components made from semiconductor material, which can be made smaller and smaller with less scrap as a result of better quality control, a single solar cell still takes the same amount of ultra-pure silicon to make as it did thirty years ago. Superior quality control fails to yield the same production gain seen in the manufacture of chips and transistors (where isolated specks of impurity can ruin many microscopic circuits on one wafer of silicon). The same number of impure inclusions does little to impact the overall efficiency of a 3-inch solar cell.

Yet another type of special-purpose "battery" is the *chemical detection cell*. Simply put, these cells chemically react with specific substances in the air to create a voltage directly proportional to the concentration of that substance. A common application for a chemical detection cell is in the detection and measurement of oxygen concentration. Many portable oxygen analyzers have been

designed around these small cells. Cell chemistry must be designed to match the specific substance(s) to be detected, and the cells do tend to “wear out,” as their electrode materials deplete or become contaminated with use.

Review

- *mercury standard cells* are special types of batteries which were once used as voltage calibration standards before the advent of precision semiconductor reference devices.
- A *fuel cell* is a kind of battery that uses a combustible fuel and oxidizer as reactants to generate electricity. They are promising sources of electrical power in the future, “burning” fuels with very low emissions.
- A *solar cell* uses ambient light energy to motivate electrons from one electrode to the other, producing voltage (and current, providing an external circuit).
- A *chemical detection cell* is a special type of voltaic cell which produces voltage proportional to the concentration of an applied substance (usually a specific gas in ambient air).

This page titled 11.4: Special-purpose Batteries is shared under a GNU Free Documentation License 1.3 license and was authored, remixed, and/or curated by Tony R. Kuphaldt (All About Circuits) via source content that was edited to the style and standards of the LibreTexts platform.

11.5: Practical Considerations - Batteries

When connecting batteries together to form larger “banks” (a *battery* of batteries?), the constituent batteries must be matched to each other so as to not cause problems. First we will consider connecting batteries in series for greater voltage:

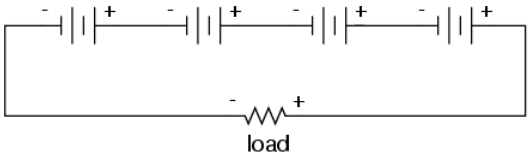

We know that the current is equal at all points in a series circuit, so whatever amount of current there is in any one of the series-connected batteries must be the same for all the others as well. *For this reason, each battery must have the same amp-hour rating, or else some of the batteries will become depleted sooner than others, compromising the capacity of the whole bank*. Please note that the total amp-hour capacity of this series battery bank is not affected by the number of batteries.

Next, we will consider connecting batteries in parallel for greater current capacity (lower internal resistance), or greater amp-hour capacity:

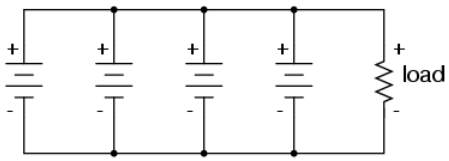

We know that the voltage is equal across all branches of a parallel circuit, so we must be sure that these batteries are of equal voltage. If not, we will have relatively large currents circulating from one battery through another, the higher-voltage batteries overpowering the lower-voltage batteries. This is not good.

On this same theme, we must be sure that any overcurrent protection (circuit breakers or fuses) are installed in such a way as to be effective. For our series battery bank, one fuse will suffice to protect the wiring from excessive current, since any break in a series circuit stops current through all parts of the circuit:

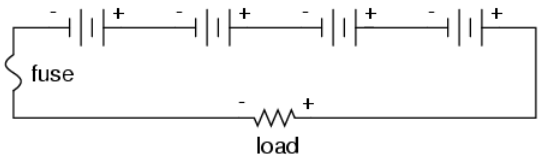

With a parallel battery bank, one fuse is adequate for protecting the wiring against load overcurrent (between the parallel-connected batteries and the load), but we have other concerns to protect against as well. Batteries have been known to internally short-circuit, due to electrode separator failure, causing a problem not unlike that where batteries of unequal voltage are connected in parallel: the good batteries will overpower the failed (lower voltage) battery, causing relatively large currents within the batteries’ connecting wires. To guard against this eventuality, we should protect each and every battery against overcurrent with individual battery fuses, in addition to the load fuse:

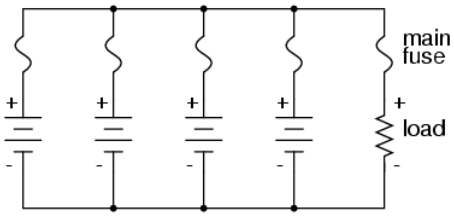

When dealing with secondary-cell batteries, particular attention must be paid to the method and timing of charging. Different types and construction of batteries have different charging needs, and the manufacturer’s recommendations are probably the best guide to

follow when designing or maintaining a system. Two distinct concerns of battery charging are *cycling* and *overcharging*. Cycling refers to the process of charging a battery to a "full" condition and then discharging it to a lower state. All batteries have a finite (limited) cycle life, and the allowable "depth" of cycle (how far it should be discharged at any time) varies from design to design. Overcharging is the condition where current continues to be forced backwards through a secondary cell beyond the point where the cell has reached full charge. With lead-acid cells in particular, overcharging leads to electrolysis of the water ("boiling" the water out of the battery) and shortened life.

Any battery containing water in the electrolyte is subject to the production of hydrogen gas due to electrolysis. This is especially true for overcharged lead-acid cells, but not exclusive to that type. Hydrogen is an extremely flammable gas (especially in the presence of free oxygen created by the same electrolysis process), odorless and colorless. Such batteries pose an explosion threat even under normal operating conditions, and must be treated with respect. The author has been a firsthand witness to a lead-acid battery explosion, where a spark created by the removal of a battery charger (small DC power supply) from an automotive battery ignited hydrogen gas within the battery case, blowing the top off the battery and splashing sulfuric acid everywhere. This occurred in a high school automotive shop, no less. If it were not for all the students nearby wearing safety glasses and buttoned-collar overalls, significant injury could have occurred.

When connecting and disconnecting charging equipment to a battery, always make the last connection (or first disconnection) at a location away from the battery itself (such as at a point on one of the battery cables, at least a foot away from the battery), so that any resultant spark has little or no chance of igniting hydrogen gas.

In large, permanently installed battery banks, batteries are equipped with vent caps above each cell, and hydrogen gas is vented outside of the battery room through hoods immediately over the batteries. Hydrogen gas is very light and rises quickly. The greatest danger is when it is allowed to accumulate in an area, awaiting ignition.

More modern lead-acid battery designs are sealed, fabricated to re-combine the electrolyzed hydrogen and oxygen back into water, inside the battery case itself. Adequate ventilation might still be a good idea, just in case a battery were to develop a leak.

Review

- Connecting batteries in series increases voltage, but does not increase overall amp-hour capacity.
- All batteries in a series bank *must* have the same amp-hour rating.
- Connecting batteries in parallel increases total current capacity by decreasing total resistance, and it also increases overall amp-hour capacity.
- All batteries in a parallel bank *must* have the same voltage rating.
- Batteries can be damaged by excessive *cycling* and *overcharging*.
- Water-based electrolyte batteries are capable of generating explosive hydrogen gas, which must not be allowed to accumulate in an area.

This page titled 11.5: Practical Considerations - Batteries is shared under a GNU Free Documentation License 1.3 license and was authored, remixed, and/or curated by Tony R. Kuphaldt (All About Circuits) via source content that was edited to the style and standards of the LibreTexts platform.

CHAPTER OVERVIEW

12: Physics of Conductors and Insulators

12.1: 12.1 Introduction to Conductance and Conductors
12.2: Conductor Size
12.3: Conductor Ampacity
12.4: Fuses
12.5: Specific Resistance
12.6: Temperature Coefficient of Resistance
12.7: Superconductivity
12.8: Insulator Breakdown Voltage

This page titled 12: Physics of Conductors and Insulators is shared under a GNU Free Documentation License 1.3 license and was authored, remixed, and/or curated by Tony R. Kuphaldt (All About Circuits) via source content that was edited to the style and standards of the LibreTexts platform.

12.1: 12.1 Introduction to Conductance and Conductors

Unfortunately, the scientific theories explaining why certain materials conduct and others don't are quite complex, rooted in quantum mechanical explanations in how electrons are arranged around the nuclei of atoms. Contrary to the well-known "planetary" model of electrons whirling around an atom's nucleus as well-defined chunks of matter in circular or elliptical orbits, electrons in "orbit" don't really act like pieces of matter at all. Rather, they exhibit the characteristics of both particle and wave, their behavior constrained by placement within distinct zones around the nucleus referred to as "shells" and "subshells." Electrons can occupy these zones only in a limited range of energies depending on the particular zone and how occupied that zone is with other electrons. If electrons really did act like tiny planets held in orbit around the nucleus by electrostatic attraction, their actions described by the same laws describing the motions of real planets, there could be no real distinction between conductors and insulators, and chemical bonds between atoms would not exist in the way they do now. It is the discrete, "quantitized" nature of electron energy and placement described by quantum physics that gives these phenomena their regularity.

When an electron is free to assume higher energy states around an atom's nucleus (due to its placement in a particular "shell"), it may be free to break away from the atom and comprise part of an electric current through the substance. If the quantum limitations imposed on an electron deny it this freedom, however, the electron is considered to be "bound" and cannot break away (at least not easily) to constitute a current. The former scenario is typical of conducting materials, while the latter is typical of insulating materials.

Some textbooks will tell you that an element's conductivity or nonconductivity is exclusively determined by the number of electrons residing in the atoms' outer "shell" (called the *valence* shell), but this is an oversimplification, as any examination of conductivity versus valence electrons in a table of elements will confirm. The true complexity of the situation is further revealed when the conductivity of molecules (collections of atoms bound to one another by electron activity) is considered.

A good example of this is the element carbon, which comprises materials of vastly differing conductivity: graphite and diamond. Graphite is a fair conductor of electricity, while diamond is practically an insulator (stranger yet, it is technically classified as a *semiconductor*, which in its pure form acts as an insulator, but can conduct under high temperatures and/or the influence of impurities). Both graphite and diamond are composed of the exact same types of atoms: carbon, with 6 protons, 6 neutrons and 6 electrons each. The fundamental difference between graphite and diamond being that graphite molecules are flat groupings of carbon atoms while diamond molecules are tetrahedral (pyramid-shaped) groupings of carbon atoms.

If atoms of carbon are joined to other types of atoms to form compounds, electrical conductivity becomes altered once again. Silicon carbide, a compound of the elements silicon and carbon, exhibits nonlinear behavior: its electrical resistance decreases with increases in applied voltage! Hydrocarbon compounds (such as the molecules found in oils) tend to be very good insulators. As you can see, a simple count of valence electrons in an atom is a poor indicator of a substance's electrical conductivity.

All metallic elements are good conductors of electricity, due to the way the atoms bond with each other. The electrons of the atoms comprising a mass of metal are so uninhibited in their allowable energy states that they float freely between the different nuclei in the substance, readily motivated by any electric field. The electrons are so mobile, in fact, that they are sometimes described by scientists as an *electron gas*, or even an *electron sea* in which the atomic nuclei rest. This electron mobility accounts for some of the other common properties of metals: good heat conductivity, malleability and ductility (easily formed into different shapes), and a lustrous finish when pure.

Thankfully, the physics behind all this is mostly irrelevant to our purposes here. Suffice it to say that some materials are good conductors, some are poor conductors, and some are in between. For now it is good enough to simply understand that these distinctions are determined by the configuration of the electrons around the constituent atoms of the material.

An important step in getting electricity to do our bidding is to be able to construct paths for electrons to flow with controlled amounts of resistance. It is also vitally important that we be able to prevent electrons from flowing where we don't want them to, by using insulating materials. However, not all conductors are the same, and neither are all insulators. We need to understand some of the characteristics of common conductors and insulators, and be able to apply these characteristics to specific applications.

Almost all conductors possess a certain, measurable resistance (special types of materials called *superconductors* possess absolutely no electrical resistance, but these are not ordinary materials, and they must be held in special conditions in order to be super conductive). Typically, we assume the resistance of the conductors in a circuit to be zero, and we expect that current passes

through them without producing any appreciable voltage drop. In reality, however, there will almost always be a voltage drop along the (normal) conductive pathways of an electric circuit, whether we want a voltage drop to be there or not:

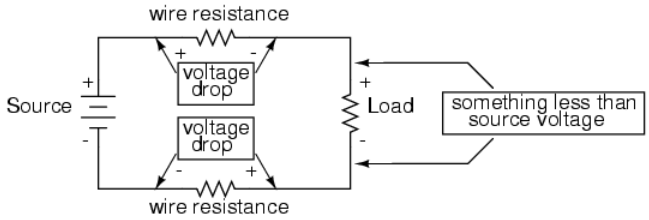

In order to calculate what these voltage drops will be in any particular circuit, we must be able to ascertain the resistance of ordinary wire, knowing the wire size and diameter. Some of the following sections of this chapter will address the details of doing this.

Review

- Electrical conductivity of a material is determined by the configuration of electrons in that materials atoms and molecules (groups of bonded atoms).
- All normal conductors possess resistance to some degree.
- Electrons flowing through a conductor with (any) resistance will produce some amount of voltage drop across the length of that conductor.

This page titled 12.1: 12.1 Introduction to Conductance and Conductors is shared under a GNU Free Documentation License 1.3 license and was authored, remixed, and/or curated by Tony R. Kuphaldt (All About Circuits) via source content that was edited to the style and standards of the LibreTexts platform.

12.2: Conductor Size

Two Basic Varieties of Electrical Wire: Solid and Stranded

Electrical wire is usually round in cross-section (although there are some unique exceptions to this rule), and comes in two basic varieties: solid and stranded. Solid copper wire is just as it sounds: a single, solid strand of copper the whole length of the wire. Stranded wire is composed of smaller strands of solid copper wire twisted together to form a single, larger conductor. The greatest benefit of stranded wire is its mechanical flexibility, being able to withstand repeated bending and twisting much better than solid copper (which tends to fatigue and break after time).

Wire size can be measured in several ways. We could speak of a wire's diameter, but since its really the cross-sectional *area* that matters most regarding the flow of electrons, we are better off designating wire size in terms of area.

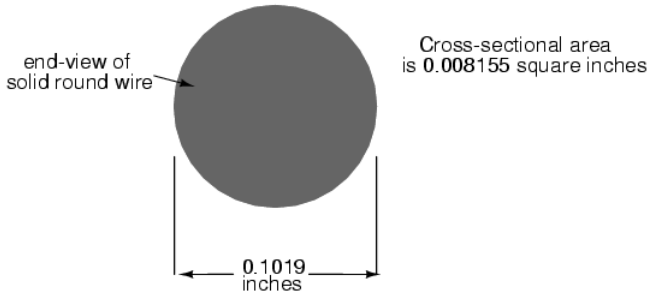

The wire cross-section picture shown above is, of course, not drawn to scale. The diameter is shown as being 0.1019 inches. Calculating the area of the cross-section with the formula Area = πr^2, we get an area of 0.008155 square inches:

$$A = \pi r^2$$

$$A = (3.1416)\left(\frac{0.1019 \text{ inches}}{2}\right)^2$$

$$A = 0.008155 \text{ square inches}$$

These are fairly small numbers to work with, so wire sizes are often expressed in measures of thousandths-of-an-inch, or *mils*. For the illustrated example, we would say that the diameter of the wire was 101.9 mils (0.1019 inch times 1000). We could also, if we wanted, express the area of the wire in the unit of square mils, calculating that value with the same circle-area formula, Area = πr^2:

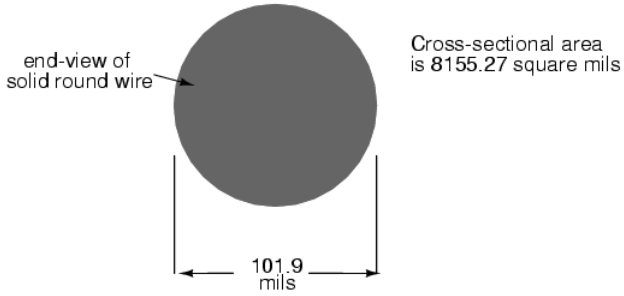

Calculating the Circular-mil Area of a Wire

However, electricians and others frequently concerned with wire size use another unit of area measurement tailored specifically for wire's circular cross-section. This special unit is called the *circular mil* (sometimes abbreviated *cmil*). The sole purpose for having this special unit of measurement is to eliminate the need to invoke the factor π (3.1415927 . . .) in the formula for calculating area, plus the need to figure wire *radius*when you've been given *diameter*. The formula for calculating the circular-mil area of a circular wire is very simple:

Circular Wire Area Formula

$$A = d^2$$

Because this is a unit of *area* measurement, the mathematical power of 2 is still in effect (doubling the width of a circle will *always* quadruple its area, no matter what units are used, or if the width of that circle is expressed in terms of radius or diameter). To illustrate the difference between measurements in square mils and measurements in circular mils, I will compare a circle with a square, showing the area of each shape in both unit measures:

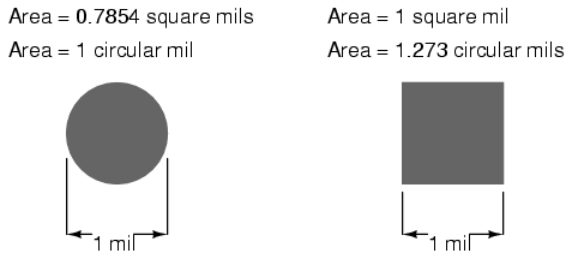

And for another size of wire:

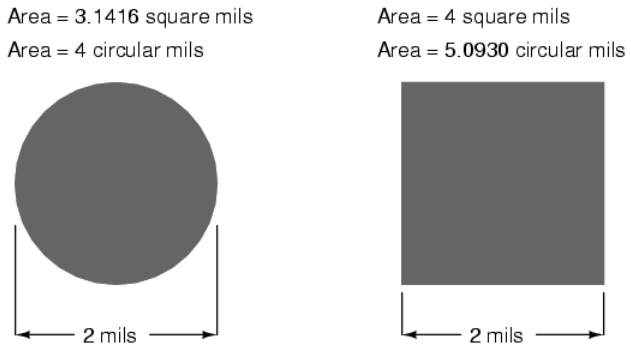

Obviously, the circle of a given diameter has less cross-sectional area than a square of width and height equal to the circle's diameter: both units of area measurement reflect that. However, it should be clear that the unit of "square mil" is really tailored for the convenient determination of a square's area, while "circular mil" is tailored for the convenient determination of a circle's area: the respective formula for each is simpler to work with. It must be understood that both units are valid for measuring the area of a shape, no matter what shape that may be. The conversion between circular mils and square mils is a simple ratio: there are π (3.1415927 . . .) square mils to every 4 circular mils.

Measuring Cross-Sectional Wire Area with Gauge

Another measure of cross-sectional wire area is the *gauge*. The gauge scale is based on whole numbers rather than fractional or decimal inches. The larger the gauge number, the skinnier the wire; the smaller the gauge number, the fatter the wire. For those acquainted with shotguns, this inversely-proportional measurement scale should sound familiar.

The table at the end of this section equates gauge with inch diameter, circular mils, and square inches for solid wire. The larger sizes of wire reach an end of the common gauge scale (which naturally tops out at a value of 1), and are represented by a series of zeros. "3/0" is another way to represent "000," and is pronounced "triple-ought." Again, those acquainted with shotguns should recognize the terminology, strange as it may sound. To make matters even more confusing, there is more than one gauge "standard" in use around the world. For electrical conductor sizing, the *American Wire Gauge* (AWG), also known as the *Brown and Sharpe* (B&S) gauge, is the measurement system of choice. In Canada and Great Britain, the *British Standard Wire Gauge* (SWG) is the legal measurement system for electrical conductors. Other wire gauge systems exist in the world for classifying wire diameter, such as the *Stubs* steel wire gauge and the *Steel Music Wire Gauge* (MWG), but these measurement systems apply to non-electrical wire use.

The American Wire Gauge (AWG) measurement system, despite its oddities, was designed with a purpose: for every three steps in the gauge scale, wire area (and weight per unit length) approximately doubles. This is a handy rule to remember when making rough wire size estimations!

For *very* large wire sizes (fatter than 4/0), the wire gauge system is typically abandoned for cross-sectional area measurement in thousands of circular mils (MCM), borrowing the old Roman numeral "M" to denote a multiple of "thousand" in front of "CM" for

“circular mils.” The following table of wire sizes does not show any sizes bigger than 4/0 gauge, because *solid* copper wire becomes impractical to handle at those sizes. Stranded wire construction is favored, instead.

```
WIRE TABLE FOR SOLID, ROUND COPPER CONDUCTORS Size Diameter Cross-sectional area Weight AWG inches cir. mi
ls sq. inches lb/1000 ft ============================================================ 4/0 -------- 0.46
00 ------- 211,600 ------ 0.1662 ------ 640.5 3/0 -------- 0.4096 ------- 167,800 ------ 0.1318 ------ 50
7.9 2/0 -------- 0.3648 ------- 133,100 ------ 0.1045 ------ 402.8 1/0 -------- 0.3249 ------- 105,500 ---
-- 0.08289 ------ 319.5 1 -------- 0.2893 ------- 83,690 ------ 0.06573 ------ 253.5 2 -------- 0.2576 ---
---- 66,370 ------ 0.05213 ------ 200.9 3 -------- 0.2294 ------- 52,630 ------ 0.04134 ------ 159.3 4 ---
----- 0.2043 ------- 41,740 ------ 0.03278 ------ 126.4 5 -------- 0.1819 ------- 33,100 ------ 0.02600 --
---- 100.2 6 -------- 0.1620 ------- 26,250 ------ 0.02062 ------ 79.46 7 -------- 0.1443 ------- 20,820 -
----- 0.01635 ------ 63.02 8 -------- 0.1285 ------- 16,510 ------ 0.01297 ------ 49.97 9 -------- 0.1144
------- 13,090 ------ 0.01028 ------ 39.63 10 -------- 0.1019 ------- 10,380 ------ 0.008155 ----- 31.43 1
1 -------- 0.09074 ------- 8,234 ------ 0.006467 ----- 24.92 12 -------- 0.08081 ------- 6,530 ------ 0.00
5129 ----- 19.77 13 -------- 0.07196 ------- 5,178 ------ 0.004067 ----- 15.68 14 -------- 0.06408 -------
4,107 ------ 0.003225 ----- 12.43 15 -------- 0.05707 ------- 3,257 ------ 0.002558 ----- 9.858 16 -------
- 0.05082 ------- 2,583 ------ 0.002028 ----- 7.818 17 -------- 0.04526 ------- 2,048 ------ 0.001609 ----
- 6.200 18 -------- 0.04030 ------- 1,624 ------ 0.001276 ----- 4.917 19 -------- 0.03589 ------- 1,288 --
---- 0.001012 ----- 3.899 20 -------- 0.03196 ------- 1,022 ----- 0.0008023 ----- 3.092 21 -------- 0.0284
6 ------- 810.1 ----- 0.0006363 ----- 2.452 22 -------- 0.02535 ------- 642.5 ----- 0.0005046 ----- 1.945
23 -------- 0.02257 ------- 509.5 ----- 0.0004001 ----- 1.542 24 -------- 0.02010 ------- 404.0 ----- 0.00
03173 ----- 1.233 25 -------- 0.01790 ------- 320.4 ----- 0.0002517 ----- 0.9699 26 -------- 0.01594 -----
-- 254.1 ----- 0.0001996 ----- 0.7692 27 -------- 0.01420 ------- 201.5 ----- 0.0001583 ----- 0.6100 28 --
------ 0.01264 ------- 159.8 ----- 0.0001255 ----- 0.4837 29 -------- 0.01126 ------- 126.7 ----- 0.000099
54 ---- 0.3836 30 -------- 0.01003 ------- 100.5 ----- 0.00007894 ---- 0.3042 31 ------- 0.008928 -------
79.70 ----- 0.00006260 ---- 0.2413 32 ------- 0.007950 ------- 63.21 ----- 0.00004964 ---- 0.1913 33 -----
-- 0.007080 ------- 50.13 ----- 0.00003937 ---- 0.1517 34 ------- 0.006305 ------- 39.75 ----- 0.00003122
---- 0.1203 35 ------- 0.005615 ------- 31.52 ----- 0.00002476 — 0.09542 36 ------- 0.005000 ------- 25.00
----- 0.00001963 — 0.07567 37 ------- 0.004453 ------- 19.83 ----- 0.00001557 — 0.06001 38 ------- 0.00396
5 ------- 15.72 ----- 0.00001235 — 0.04759 39 ------- 0.003531 ------- 12.47 ---- 0.000009793 — 0.03774 40
------- 0.003145 ------- 9.888 ---- 0.000007766 — 0.02993 41 ------- 0.002800 ------- 7.842 ---- 0.0000061
59 — 0.02374 42 ------- 0.002494 ------- 6.219 ---- 0.000004884 — 0.01882 43 ------- 0.002221 ------- 4.93
2 ---- 0.000003873 — 0.01493 44 ------- 0.001978 ------- 3.911 ---- 0.000003072 — 0.01184
```

For some high-current applications, conductor sizes beyond the practical size limit of round wire are required. In these instances, thick bars of solid metal called *busbars* are used as conductors. Busbars are usually made of copper or aluminum, and are most often uninsulated. They are physically supported away from whatever framework or structure is holding them by insulator standoff mounts. Although a square or rectangular cross-section is very common for busbar shape, other shapes are used as well. Cross-sectional area for busbars is typically rated in terms of circular mils (even for square and rectangular bars!), most likely for the convenience of being able to directly equate busbar size with round wire.

REVIEW:

- Electrons flow through large-diameter wires easier than small-diameter wires, due to the greater cross-sectional area they have in which to move.
- Rather than measure small wire sizes in inches, the unit of “mil” (1/1000 of an inch) is often employed.
- The cross-sectional area of a wire can be expressed in terms of square units (square inches or square mils), circular mils, or “gauge” scale.
- Calculating square-unit wire area for a circular wire involves the circle area formula:
- $A = \pi r^2$ *(Square units)*
- Calculating circular-mil wire area for a circular wire is much simpler, due to the fact that the unit of “circular mil” was sized just for this purpose: to eliminate the “pi” and the d/2 (radius) factors in the formula.
- $A = d^2$ *(Circular units)*
- There are π (3.1416) square mils for every 4 circular mils.
- The *gauge* system of wire sizing is based on whole numbers, larger numbers representing smaller-area wires and vice versa. Wires thicker than 1 gauge are represented by zeros: 0, 00, 000, and 0000 (spoken “single-ought,” “double-ought,” “triple-ought,” and “quadruple-ought.”
- Very large wire sizes are rated in thousands of circular mils (MCM’s), typical for busbars and wire sizes beyond 4/0.
- *Busbars* are solid bars of copper or aluminum used in high-current circuit construction. Connections made to busbars are usually welded or bolted, and the busbars are often bare (uninsulated), supported away from metal frames through the use of insulating standoffs.

This page titled 12.2: Conductor Size is shared under a GNU Free Documentation License 1.3 license and was authored, remixed, and/or curated by Tony R. Kuphaldt (All About Circuits) via source content that was edited to the style and standards of the LibreTexts platform.

12.3: Conductor Ampacity

Primarily for reasons of safety, certain standards for electrical wiring have been established within the United States, and are specified in the National Electrical Code (NEC). Typical NEC wire ampacity tables will show allowable maximum currents for different sizes and applications of wire. Though the melting point of copper theoretically imposes a limit on wire ampacity, the materials commonly employed for insulating conductors melt at temperatures far below the melting point of copper, and so practical ampacity ratings are based on the thermal limits *of the insulation*. Voltage dropped as a result of excessive wire resistance is also a factor in sizing conductors for their use in circuits, but this consideration is better assessed through more complex means (which we will cover in this chapter). A table derived from an NEC listing is shown for example:

```
COPPER CONDUCTOR AMPACITIES, IN FREE AIR AT 30 DEGREES C
=========================================================
INSULATION   RUW, T        THW, THWN       FEP, FEPB
TYPE:          TW             RUH          THHN, XHHW
=========================================================
Size    Current Rating   Current Rating   Current Rating
AWG     @ 60 degrees C   @ 75 degrees C   @ 90 degrees C
=========================================================
20 -------- *9 ----------------------------- *12.5
18 -------- *13 ----------------------------- 18
16 -------- *18 ----------------------------- 24
14 --------- 25 ------------- 30 ------------- 35
12 --------- 30 ------------- 35 ------------- 40
10 --------- 40 ------------- 50 ------------- 55
8 ---------- 60 ------------- 70 ------------- 80
6 ---------- 80 ------------- 95 ------------ 105
4 --------- 105 ------------ 125 ------------ 140
2 --------- 140 ------------ 170 ------------ 190
1 --------- 165 ------------ 195 ------------ 220
1/0 ------- 195 ------------ 230 ------------ 260
2/0 ------- 225 ------------ 265 ------------ 300
3/0 ------- 260 ------------ 310 ------------ 350
4/0 ------- 300 ------------ 360 ------------ 405
* = estimated values; normally, these small wire sizes
are not manufactured with these insulation types
```

Notice the substantial ampacity differences between same-size wires with different types of insulation. This is due, again, to the thermal limits (60°, 75°, 90°) of each type of insulation material.

These ampacity ratings are given for copper conductors in “free air” (maximum typical air circulation), as opposed to wires placed in conduit or wire trays. As you will notice, the table fails to specify ampacities for small wire sizes. This is because the NEC concerns itself primarily with power wiring (large currents, big wires) rather than with wires common to low-current electronic work.

There is meaning in the letter sequences used to identify conductor types, and these letters usually refer to properties of the conductor’s insulating layer(s). Some of these letters symbolize individual properties of the wire while others are simply abbreviations. For example, the letter “T” by itself means “thermoplastic” as an insulation material, as in “TW” or “THHN.” However, the three-letter combination “MTW” is an abbreviation for *Machine Tool Wire*, a type of wire whose insulation is made to be flexible for use in machines experiencing significant motion or vibration.

```
INSULATION MATERIAL
===================
C = Cotton
FEP = Fluorinated Ethylene Propylene
MI = Mineral (magnesium oxide)
PFA = Perfluoroalkoxy
R = Rubber (sometimes Neoprene)
S = Silicone "rubber"
SA = Silicone-asbestos
T = Thermoplastic
TA = Thermoplastic-asbestos
TFE = Polytetrafluoroethylene ("Teflon")
X = Cross-linked synthetic polymer
Z = Modified ethylene tetrafluoroethylene
HEAT RATING
===========
H = 75 degrees Celsius
HH = 90 degrees Celsius
OUTER COVERING ("JACKET")
=========================
N = Nylon
SPECIAL SERVICE CONDITIONS
==========================
U = Underground
W = Wet
-2 = 90 degrees Celsius and wet
```

Therefore, a “THWN” conductor has **T**hermoplastic insulation, is **H**eat resistant to 75º Celsius, is rated for **W**et conditions, and comes with a **N**ylon outer jacketing.

Letter codes like these are only used for general-purpose wires such as those used in households and businesses. For high-power applications and/or severe service conditions, the complexity of conductor technology defies classification according to a few letter codes. Overhead power line conductors are typically bare metal, suspended from towers by glass, porcelain, or ceramic mounts known as insulators. Even so, the actual construction of the wire to withstand physical forces both static (dead weight) and dynamic (wind) loading can be complex, with multiple layers and different types of metals wound together to form a single conductor. Large, underground power conductors are sometimes insulated by paper, then enclosed in a steel pipe filled with pressurized nitrogen or oil to prevent water intrusion. Such conductors require support equipment to maintain fluid pressure throughout the pipe.

Other insulating materials find use in small-scale applications. For instance, the small-diameter wire used to make electromagnets (coils producing a magnetic field from the flow of electrons) are often insulated with a thin layer of enamel. The enamel is an excellent insulating material and is very thin, allowing many “turns” of wire to be wound in a small space.

Review

- Wire resistance creates heat in operating circuits. This heat is a potential fire ignition hazard.
- Skinny wires have a lower allowable current (“ampacity”) than fat wires, due to their greater resistance per unit length, and consequently greater heat generation per unit current.
- The National Electrical Code (NEC) specifies ampacities for power wiring based on allowable insulation temperature and wire application.

This page titled 12.3: Conductor Ampacity is shared under a GNU Free Documentation License 1.3 license and was authored, remixed, and/or curated by Tony R. Kuphaldt (All About Circuits) via source content that was edited to the style and standards of the LibreTexts platform.

12.4: Fuses

What is a Fuse?

A fuse is nothing more than a short length of wire designed to melt and separate in the event of excessive current. Fuses are always connected in series with the component(s) to be protected from overcurrent, so that when the fuse *blows* (opens) it will open the entire circuit and stop current through the component(s). A fuse connected in one branch of a parallel circuit, of course, would not affect current through any of the other branches.

Normally, the thin piece of fuse wire is contained within a safety sheath to minimize hazards of arc blast if the wire burns open with violent force, as can happen in the case of severe overcurrents. In the case of small automotive fuses, the sheath is transparent so that the fusible element can be visually inspected. Residential wiring used to commonly employ screw-in fuses with glass bodies and a thin, narrow metal foil strip in the middle. A photograph showing both types of fuses is shown here:

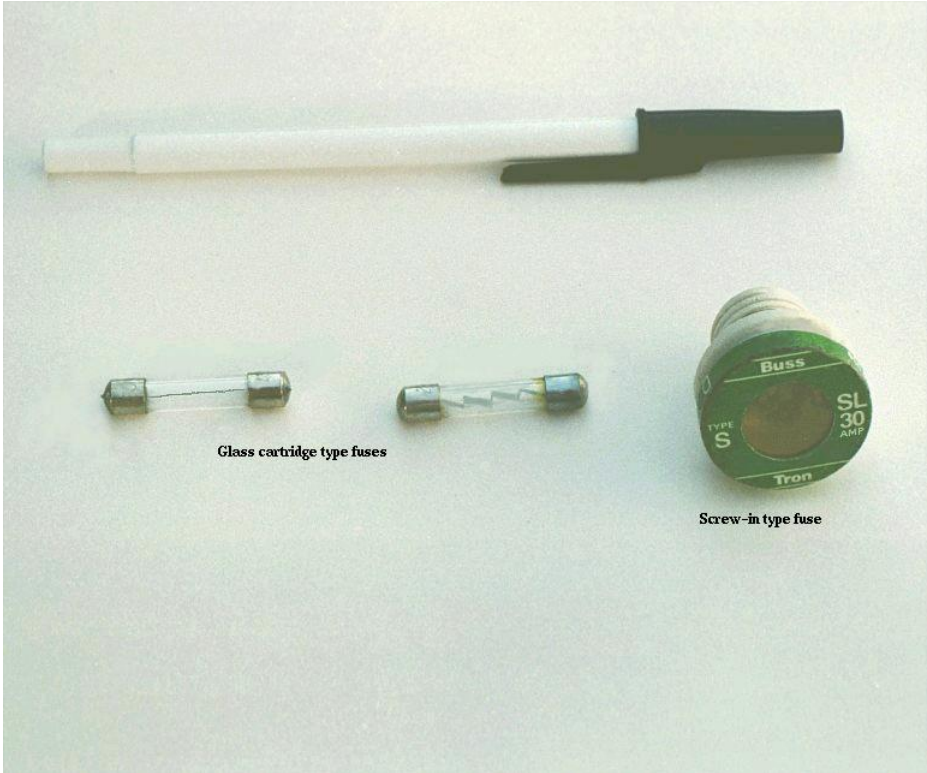

Cartridge type fuses are popular in automotive applications, and in industrial applications when constructed with sheath materials other than glass. Because fuses are designed to “fail” open when their current rating is exceeded, they are typically designed to be replaced easily in a circuit. This means they will be inserted into some type of holder rather than being directly soldered or bolted to the circuit conductors. The following is a photograph showing a couple of glass cartridge fuses in a multi-fuse holder:

The fuses are held by spring metal clips, the clips themselves being permanently connected to the circuit conductors. The base material of the fuse holder (or *fuse block* as they are sometimes called) is chosen to be a good insulator.

Another type of fuse holder for cartridge-type fuses is commonly used for installation in equipment control panels, where it is desirable to conceal all electrical contact points from human contact. Unlike the fuse block just shown, where all the metal clips are openly exposed, this type of fuse holder completely encloses the fuse in an insulating housing:

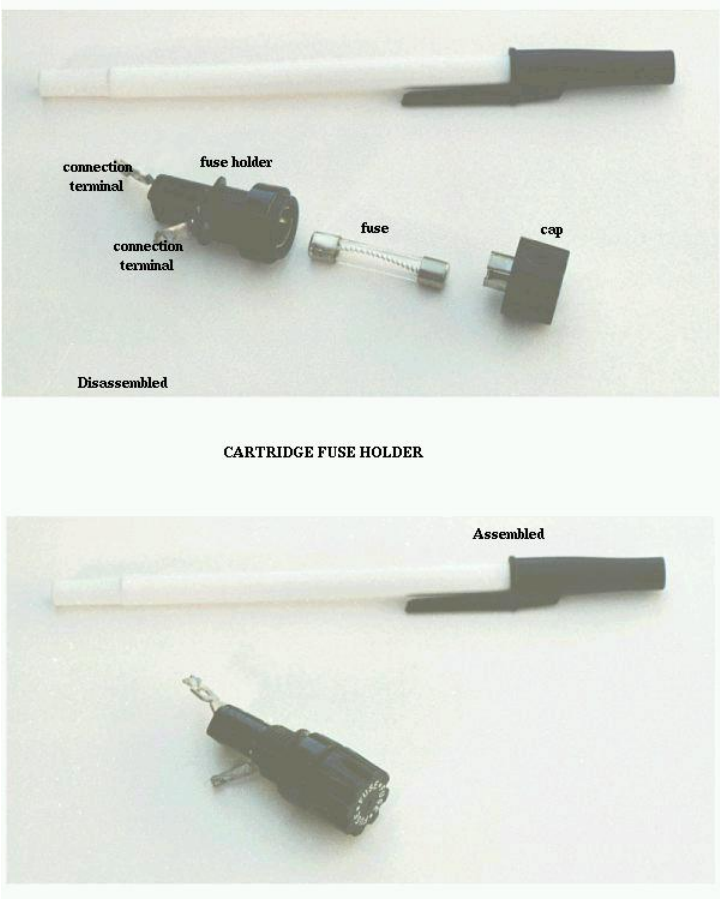

The most common device in use for overcurrent protection in high-current circuits today is the *circuit breaker*.

What is a Circuit Breaker?

Circuit breakers are specially designed switches that automatically open to stop current in the event of an overcurrent condition. Small circuit breakers, such as those used in residential, commercial and light industrial service are thermally operated. They contain a *bimetallic strip* (a thin strip of two metals bonded back-to-back) carrying circuit current, which bends when heated. When enough force is generated by the bimetallic strip (due to overcurrent heating of the strip), the trip mechanism is actuated and the breaker will open. Larger circuit breakers are automatically actuated by the strength of the magnetic field produced by current-carrying conductors within the breaker, or can be triggered to trip by external devices monitoring the circuit current (those devices being called *protective relays*).

Because circuit breakers don't fail when subjected to overcurrent conditions—rather, they merely open and can be re-closed by moving a lever—they are more likely to be found connected to a circuit in a more permanent manner than fuses. A photograph of a small circuit breaker is shown here:

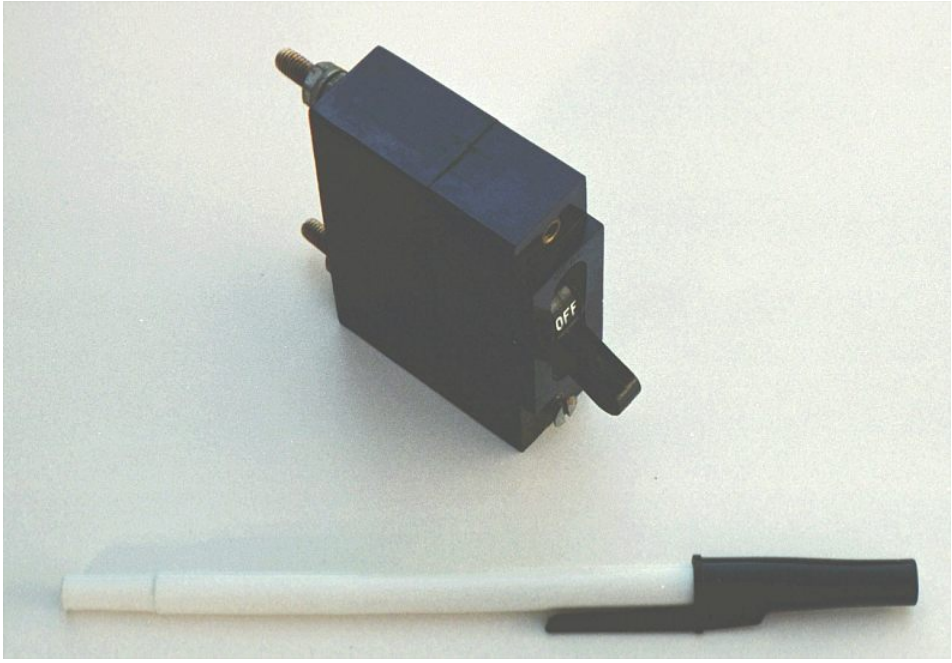

From outside appearances, it looks like nothing more than a switch. Indeed, it could be used as such. However, its true function is to operate as an overcurrent protection device.

It should be noted that some automobiles use inexpensive devices known as *fusible links* for overcurrent protection in the battery charging circuit, due to the expense of a properly-rated fuse and holder. A fusible link is a primitive fuse, being nothing more than a short piece of rubber-insulated wire designed to melt open in the event of overcurrent, with no hard sheathing of any kind. Such crude and potentially dangerous devices are never used in industry or even residential power use, mainly due to the greater voltage and current levels encountered. As far as this author is concerned, their application even in automotive circuits is questionable.

The electrical schematic drawing symbol for a fuse is an S-shaped curve:

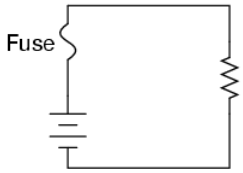

Fuse Ratings

Fuses are primarily rated, as one might expect, in the unit for current: amps. Although their operation depends on the self-generation of heat under conditions of excessive current by means of the fuse's own electrical resistance, they are engineered to contribute a negligible amount of extra resistance to the circuits they protect. This is largely accomplished by making the fuse wire as short as is practically possible. Just as a normal wire's ampacity is not related to its length (10-gauge solid copper wire will handle 40 amps of current in free air, regardless of how long or short of a piece it is), a fuse wire of certain material and gauge will blow at a certain current no matter how long it is. Since length is not a factor in current rating, the shorter it can be made, the less resistance it will have end-to-end.

However, the fuse designer also has to consider what happens after a fuse blows: the melted ends of the once-continuous wire will be separated by an air gap, with full supply voltage between the ends. If the fuse isn't made long enough on a high-voltage circuit, a spark may be able to jump from one of the melted wire ends to the other, completing the circuit again:

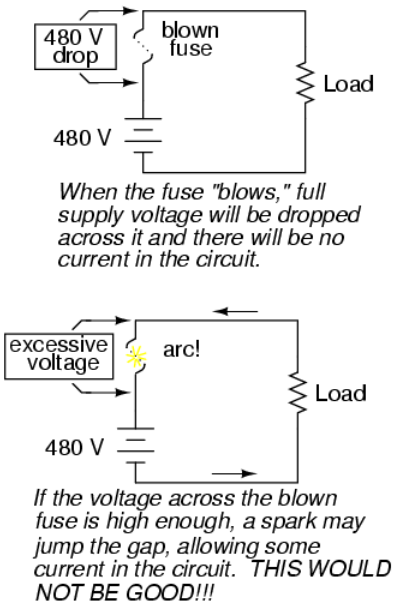

Consequently, fuses are rated in terms of their voltage capacity as well as the current level at which they will blow.

Some large industrial fuses have replaceable wire elements, to reduce the expense. The body of the fuse is an opaque, reusable cartridge, shielding the fuse wire from exposure and shielding surrounding objects from the fuse wire.

There's more to the current rating of a fuse than a single number. If a current of 35 amps is sent through a 30 amp fuse, it may blow suddenly or delay before blowing, depending on other aspects of its design. Some fuses are intended to blow very fast, while others are designed for more modest "opening" times, or even for a delayed action depending on the application. The latter fuses are sometimes called *slow-blow* fuses due to their intentional time-delay characteristics.

A classic example of a slow-blow fuse application is in electric motor protection, where *inrush* currents of up to ten times normal operating current are commonly experienced every time the motor is started from a dead stop. If fast-blowing fuses were to be used in an application like this, the motor could never get started because the normal inrush current levels would blow the fuse(s) immediately! The design of a slow-blow fuse is such that the fuse element has more mass (but no more ampacity) than an equivalent fast-blow fuse, meaning that it will heat up slower (but to the same ultimate temperature) for any given amount of current.

On the other end of the fuse action spectrum, there are so-called *semiconductor fuses* designed to open very quickly in the event of an overcurrent condition. Semiconductor devices such as transistors tend to be especially intolerant of overcurrent conditions, and as such require fast-acting protection against overcurrents in high-power applications.

Fuses are always supposed to be placed on the "hot" side of the load in systems that are grounded. The intent of this is for the load to be completely de-energized in all respects after the fuse opens. To see the difference between fusing the "hot" side versus the "neutral" side of a load, compare these two circuits:

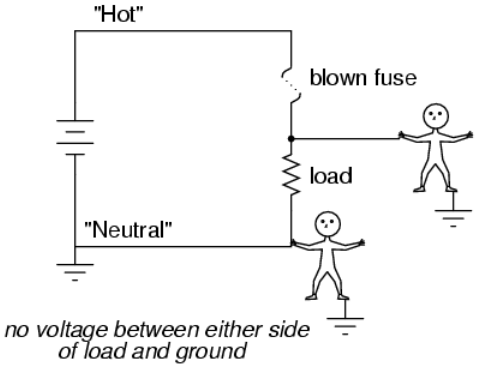

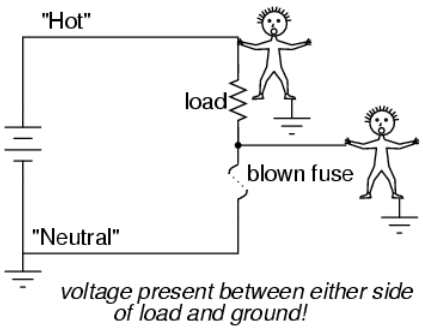

In either case, the fuse successfully interrupted current to the load, but the lower circuit fails to interrupt potentially dangerous voltage from either side of the load to ground, where a person might be standing. The first circuit design is much safer.

As it was said before, fuses are not the only type of overcurrent protection device in use. Switch-like devices called circuit breakers are often (and more commonly) used to open circuits with excessive current, their popularity due to the fact that they don't destroy themselves in the process of breaking the circuit as fuses do. In any case, though, placement of the overcurrent protection device in a circuit will follow the same general guidelines listed above: namely, to "fuse" the side of the power supply *not* connected to ground.

Although overcurrent protection placement in a circuit may determine the relative shock hazard of that circuit under various conditions, it must be understood that such devices were never intended to guard against electric shock. Neither fuses nor circuit breakers were designed to open in the event of a person getting shocked; rather, they are intended to open only under conditions of potential conductor overheating. Overcurrent devices primarily protect the conductors of a circuit from over temperature damage (and the fire hazards associated with overly hot conductors), and secondarily protect specific pieces of equipment such as loads and generators (some fast-acting fuses are designed to protect electronic devices particularly susceptible to current surges). Since the current levels necessary for electric shock or electrocution are much lower than the normal current levels of common power loads, a condition of overcurrent is not indicative of shock occurring. There are other devices designed to detect certain shock conditions (ground-fault detectors being the most popular), but these devices strictly serve that one purpose and are uninvolved with protection of the conductors against overheating.

Review

- A *fuse* is a small, thin conductor designed to melt and separate into two pieces for the purpose of breaking a circuit in the event of excessive current.
- A *circuit breaker* is a specially designed switch that automatically opens to interrupt circuit current in the event of an overcurrent condition. They can be "tripped" (opened) thermally, by magnetic fields, or by external devices called "protective relays," depending on the design of breaker, its size, and the application.
- Fuses are primarily rated in terms of maximum current, but are also rated in terms of how much voltage drop they will safely withstand after interrupting a circuit.
- Fuses can be designed to blow fast, slow, or anywhere in between for the same maximum level of current.
- The best place to install a fuse in a grounded power system is on the ungrounded conductor path to the load. That way, when the fuse blows there will only be the grounded (safe) conductor still connected to the load, making it safer for people to be around.

This page titled 12.4: Fuses is shared under a GNU Free Documentation License 1.3 license and was authored, remixed, and/or curated by Tony R. Kuphaldt (All About Circuits) via source content that was edited to the style and standards of the LibreTexts platform.

12.5: Specific Resistance

Designing Wire Resistance

Conductor ampacity rating is a crude assessment of resistance based on the potential for current to create a fire hazard. However, we may come across situations where the voltage drop created by wire resistance in a circuit poses concerns other than fire avoidance. For instance, we may be designing a circuit where voltage across a component is critical, and must not fall below a certain limit. If this is the case, the voltage drops resulting from wire resistance may cause an engineering problem while being well within safe (fire) limits of ampacity:

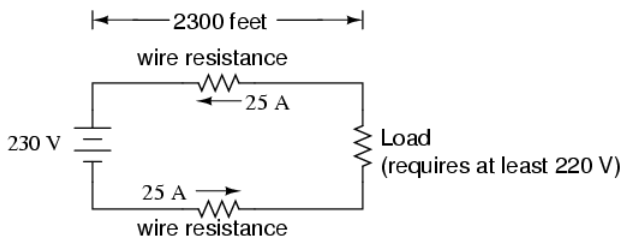

The Resistance Formula

If the load in the above circuit will not tolerate less than 220 volts, given a source voltage of 230 volts, then we'd better be sure that the wiring doesn't drop more than 10 volts along the way. Counting both the supply and return conductors of this circuit, this leaves a maximum tolerable drop of 5 volts along the length of each wire. Using Ohm's Law (R=E/I), we can determine the maximum allowable resistance for each piece of wire:

$$R = \frac{E}{I}$$

$$R = \frac{5\ V}{25\ A}$$

$$R = 0.2\ \Omega$$

We know that the wire length is 2300 feet for each piece of wire, but how do we determine the amount of resistance for a specific size and length of wire? To do that, we need another formula:

$$R = \rho \frac{l}{A}$$

This formula relates the resistance of a conductor with its specific resistance (the Greek letter "rho" (ρ), which looks similar to a lower-case letter "p"), its length ("l"), and its cross-sectional area ("A"). Notice that with the length variable on the top of the fraction, the resistance value increases as the length increases (analogy: it is more difficult to force liquid through a long pipe than a short one), and decreases as cross-sectional area increases (analogy: liquid flows easier through a fat pipe than through a skinny one). Specific resistance is a constant for the type of conductor material being calculated.

The specific resistances of several conductive materials can be found in the following table. We find copper near the bottom of the table, second only to silver in having low specific resistance (good conductivity):

```
SPECIFIC RESISTANCE AT 20 DEGREES CELSIUS Material Element/Alloy (ohm-cmil/ft) (microohm-cm) =============
================================================= Nichrome ------ Alloy --------------- 675 ----------- 1
12.2 Nichrome V ---- Alloy --------------- 650 ----------- 108.1 Manganin ------ Alloy --------------- 290
----------- 48.21 Constantan ---- Alloy --------------- 272.97 -------- 45.38 Steel* -------- Alloy ------
--------- 100 ----------- 16.62 Platinum ----- Element -------------- 63.16 --------- 10.5 Iron ---------
Element -------------- 57.81 --------- 9.61 Nickel ------- Element -------------- 41.69 --------- 6.93 Zin
c --------- Element -------------- 35.49 --------- 5.90 Molybdenum — Element -------------- 32.12 --------
- 5.34 Tungsten ----- Element -------------- 31.76 --------- 5.28 Aluminum ----- Element -------------- 1
5.94 --------- 2.650 Gold --------- Element -------------- 13.32 --------- 2.214 Copper ------- Element --
------------ 10.09 --------- 1.678 Silver ------- Element -------------- 9.546 --------- 1.587 * = Steel a
lloy at 99.5 percent iron, 0.5 percent carbon
```

Notice that the figures for specific resistance in the above table are given in the very strange unit of "ohms-cmil/ft" (Ω-cmil/ft), This unit indicates what units we are expected to use in the resistance formula (R=ρl/A). In this case, these figures for specific resistance are intended to be used when length is measured in feet and cross-sectional area is measured in circular mils.

The metric unit for specific resistance is the ohm-meter (Ω-m), or ohm-centimeter (Ω-cm), with 1.66243 x 10^{-9} Ω-meters per Ω-cmil/ft (1.66243 x 10^{-7} Ω-cm per Ω-cmil/ft). In the Ω-cm column of the table, the figures are actually scaled as μΩ-cm due to their very small magnitudes. For example, iron is listed as 9.61 μΩ-cm, which could be represented as 9.61 x 10^{-6} Ω-cm.

When using the unit of Ω-meter for specific resistance in the R=ρl/A formula, the length needs to be in meters and the area in square meters. When using the unit of Ω-centimeter (Ω-cm) in the same formula, the length needs to be in centimeters and the area in square centimeters.

All these units for specific resistance are valid for any material (Ω-cmil/ft, Ω-m, or Ω-cm). One might prefer to use Ω-cmil/ft, however, when dealing with round wire where the cross-sectional area is already known in circular mils. Conversely, when dealing with odd-shaped busbar or custom busbar cut out of metal stock, where only the linear dimensions of length, width, and height are known, the specific resistance units of Ω-meter or Ω-cm may be more appropriate.

Solving

Going back to our example circuit, we were looking for wire that had 0.2 Ω or less of resistance over a length of 2300 feet. Assuming that we're going to use copper wire (the most common type of electrical wire manufactured), we can set up our formula as such:

$$R = \rho \frac{l}{A}$$

. . . solving for unknown area A. . .

$$A = \rho \frac{l}{R}$$

$$A = (10.09\ \Omega\text{-cmil/ft}) \left(\frac{2300\ \text{feet}}{0.2\ \Omega}\right)$$

$$A = 116{,}035\ \text{cmils}$$

Algebraically solving for A, we get a value of 116,035 circular mils. Referencing our solid wire size table, we find that "double-ought" (2/0) wire with 133,100 cmils is adequate, whereas the next lower size, "single-ought" (1/0), at 105,500 cmils is too small. Bear in mind that our circuit current is a modest 25 amps. According to our ampacity table for copper wire in free air, 14 gauge wire would have sufficed (as far as *not*starting a fire is concerned). However, from the standpoint of voltage drop, 14 gauge wire would have been very unacceptable.

Just for fun, let's see what 14 gauge wire would have done to our power circuit's performance. Looking at our wire size table, we find that 14 gauge wire has a cross-sectional area of 4,107 circular mils. If we're still using copper as a wire material (a good choice, unless we're *really* rich and can afford 4600 feet of 14 gauge silver wire!), then our specific resistance will still be 10.09 Ω-cmil/ft:

$$R = \rho \frac{l}{A}$$

$$R = (10.09\ \Omega\text{-cmil/ft}) \left(\frac{2300\ \text{feet}}{4107\ \text{cmil}}\right)$$

$$R = 5.651\ \Omega$$

Remember that this is 5.651 Ω per 2300 feet of 14-gauge copper wire, and that we have two runs of 2300 feet in the entire circuit, so *each* wire piece in the circuit has 5.651 Ω of resistance:

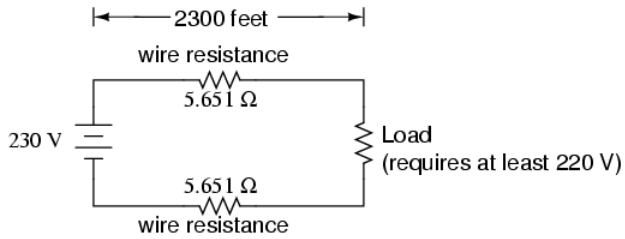

Our total circuit wire resistance is 2 times 5.651, or 11.301 Ω. Unfortunately, this is *far* too much resistance to allow 25 amps of current with a source voltage of 230 volts. Even if our load resistance was 0 Ω, our wiring resistance of 11.301 Ω would restrict the circuit current to a mere 20.352 amps! As you can see, a "small" amount of wire resistance can make a big difference in circuit performance, especially in power circuits where the currents are much higher than typically encountered in electronic circuits.

Let's do an example resistance problem for a piece of custom-cut busbar. Suppose we have a piece of solid aluminum bar, 4 centimeters wide by 3 centimeters tall by 125 centimeters long, and we wish to figure the end-to-end resistance along the long dimension (125 cm). First, we would need to determine the cross-sectional area of the bar:

$$\text{Area} = \text{Width x Height}$$

$$A = (4\text{ cm})(3\text{ cm})$$

$$A = 12\text{ square cm}$$

We also need to know the specific resistance of aluminum, in the unit proper for this application (Ω-cm). From our table of specific resistances, we see that this is 2.65 x 10^{-6} Ω-cm. Setting up our R=ρl/A formula, we have:

$$R = \rho \frac{l}{A}$$

$$R = (2.65 \text{ x } 10^{-6}\ \Omega\text{-cm}) \left(\frac{125\text{ cm}}{12\text{ cm}^2}\right)$$

$$R = 27.604\ \mu\Omega$$

As you can see, the sheer thickness of a busbar makes for *very* low resistances compared to that of standard wire sizes, even when using a material with a greater specific resistance.

The procedure for determining busbar resistance is not fundamentally different than for determining round wire resistance. We just need to make sure that cross-sectional area is calculated properly and that all the units correspond to each other as they should.

Review

- Conductor resistance increases with increased length and decreases with increased cross-sectional area, all other factors being equal.
- *Specific Resistance* ("ρ") is a property of any conductive material, a figure used to determine the end-to-end resistance of a conductor given length and area in this formula: R = ρl/A
- Specific resistance for materials are given in units of Ω-cmil/ft or Ω-meters (metric). Conversion factor between these two units is 1.66243 x 10^{-9} Ω-meters per Ω-cmil/ft, or 1.66243 x 10^{-7} Ω-cm per Ω-cmil/ft.
- If wiring voltage drop in a circuit is critical, exact resistance calculations for the wires must be made before wire size is chosen.

This page titled 12.5: Specific Resistance is shared under a GNU Free Documentation License 1.3 license and was authored, remixed, and/or curated by Tony R. Kuphaldt (All About Circuits) via source content that was edited to the style and standards of the LibreTexts platform.

12.6: Temperature Coefficient of Resistance

Resistance values for conductors at any temperature other than the standard temperature (usually specified at 20 Celsius) on the specific resistance table must be determined through yet another formula:

$$R = R_{ref}\,[1 + \alpha(T - T_{ref})]$$

Where,

R = Conductor resistance at temperature "T"

R_{ref} = Conductor resistance at reference temperature T_{ref}, usually 20° C, but sometimes 0° C.

α = Temperature coefficient of resistance for the conductor material.

T = Conductor temperature in degrees Celcius.

T_{ref} = Reference temperature that α is specified at for the conductor material.

The "alpha" (α) constant is known as the *temperature coefficient of resistance*, and symbolizes the resistance change factor per degree of temperature change. Just as all materials have a certain specific resistance (at 20° C), they also *change* resistance according to temperature by certain amounts. For pure metals, this coefficient is a positive number, meaning that resistance *increases* with increasing temperature. For the elements carbon, silicon, and germanium, this coefficient is a negative number, meaning that resistance *decreases* with increasing temperature. For some metal alloys, the temperature coefficient of resistance is very close to zero, meaning that the resistance hardly changes at all with variations in temperature (a good property if you want to build a precision resistor out of metal wire!). The following table gives the temperature coefficients of resistance for several common metals, both pure and alloy:

```
TEMPERATURE COEFFICIENTS OF RESISTANCE, AT 20 DEGREES C
Material     Element/Alloy    "alpha" per degree Celsius
==========================================================
Nickel -------- Element --------------- 0.005866
Iron ---------- Element --------------- 0.005671
Molybdenum ---- Element --------------- 0.004579
Tungsten ------ Element --------------- 0.004403
Aluminum ------ Element --------------- 0.004308
Copper -------- Element --------------- 0.004041
Silver -------- Element --------------- 0.003819
Platinum ------ Element --------------- 0.003729
Gold ---------- Element --------------- 0.003715
Zinc ---------- Element --------------- 0.003847
Steel* --------- Alloy --------------- 0.003
Nichrome ------- Alloy --------------- 0.00017
Nichrome V ----- Alloy --------------- 0.00013
Manganin ------- Alloy ------------ +/- 0.000015
Constantan ----- Alloy --------------- -0.000074
* = Steel alloy at 99.5 percent iron, 0.5 percent carbon
```

Let's take a look at an example circuit to see how temperature can affect wire resistance, and consequently circuit performance:

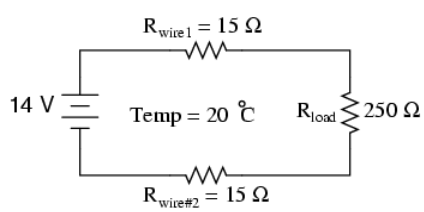

This circuit has a total wire resistance (wire 1 + wire 2) of 30 Ω at standard temperature. Setting up a table of voltage, current, and resistance values we get:

	$Wire_1$	$Wire_2$	Load	Total	
E	0.75	0.75	12.5	14	Volts
I	50 m	50 m	50 m	50 m	Amps
R	15	15	250	280	Ohms

At 20° Celsius, we get 12.5 volts across the load and a total of 1.5 volts (0.75 + 0.75) dropped across the wire resistance. If the temperature were to rise to 35° Celsius, we could easily determine the change of resistance for each piece of wire. Assuming the use of copper wire (α = 0.004041) we get:

$$R = R_{ref}[1 + \alpha(T - T_{ref})]$$

$$R = (15\ \Omega)[1 + 0.004041(35^o - 20^o)]$$

$$R = 15.909\ \Omega$$

Recalculating our circuit values, we see what changes this increase in temperature will bring:

	$Wire_1$	$Wire_2$	Load	Total	
E	0.79	0.79	12.42	14	Volts
I	49.677m	49.677m	49.677m	49.677m	Amps
R	15.909	15.909	250	281.82	Ohms

As you can see, voltage across the load went down (from 12.5 volts to 12.42 volts) and voltage drop across the wires went up (from 0.75 volts to 0.79 volts) as a result of the temperature increasing. Though the changes may seem small, they can be significant for power lines stretching miles between power plants and substations, substations and loads. In fact, power utility companies often have to take line resistance changes resulting from seasonal temperature variations into account when calculating allowable system loading.

Review

- Most conductive materials change specific resistance with changes in temperature. This is why figures of specific resistance are always specified at a standard temperature (usually 20° or 25° Celsius).
- The resistance-change factor per degree Celsius of temperature change is called the *temperature coefficient of resistance*. This factor is represented by the Greek lower-case letter "alpha" (α).
- A positive coefficient for a material means that its resistance increases with an increase in temperature. Pure metals typically have positive temperature coefficients of resistance. Coefficients approaching zero can be obtained by alloying certain metals.
- A negative coefficient for a material means that its resistance decreases with an increase in temperature. Semiconductor materials (carbon, silicon, germanium) typically have negative temperature coefficients of resistance.
- The formula used to determine the resistance of a conductor at some temperature other than what is specified in a resistance table is as follows:

$$R = R_{ref}[1 + \alpha(T - T_{ref})]$$

Where,

R = Conductor resistance at temperature "T"

R_{ref} = Conductor resistance at reference temperature T_{ref}, usually 20° C, but sometimes 0° C.

α = Temperature coefficient of resistance for the conductor material.

T = Conductor temperature in degrees Celcius.

T_{ref} = Reference temperature that α is specified at for the conductor material.

This page titled 12.6: Temperature Coefficient of Resistance is shared under a GNU Free Documentation License 1.3 license and was authored, remixed, and/or curated by Tony R. Kuphaldt (All About Circuits) via source content that was edited to the style and standards of the LibreTexts platform.

12.7: Superconductivity

There is some debate over exactly how and why superconducting materials superconduct. One theory holds that electrons group together and travel in pairs (called *Cooper pairs*) within a superconductor rather than travel independently, and that has something to do with their frictionless flow. Interestingly enough, another phenomenon of super-cold temperatures, *superfluidity*, happens with certain liquids (especially liquid helium), resulting in frictionless flow of molecules.

Superconductivity promises extraordinary capabilities for electric circuits. If conductor resistance could be eliminated entirely, there would be no power losses or inefficiencies in electric power systems due to stray resistances. Electric motors could be made almost perfectly (100%) efficient. Components such as capacitors and inductors, whose ideal characteristics are normally spoiled by inherent wire resistances, could be made ideal in a practical sense. Already, some practical superconducting conductors, motors, and capacitors have been developed, but their use at this present time is limited due to the practical problems intrinsic to maintaining super-cold temperatures.

The threshold temperature for a superconductor to switch from normal conduction to superconductivity is called the *transition temperature*. Transition temperatures for "classic" superconductors are in the cryogenic range (near absolute zero), but much progress has been made in developing "high-temperature" superconductors which superconduct at warmer temperatures. One type is a ceramic mixture of yttrium, barium, copper, and oxygen which transitions at a relatively balmy -160° Celsius. Ideally, a superconductor should be able to operate within the range of ambient temperatures, or at least within the range of inexpensive refrigeration equipment.

The critical temperatures for a few common substances are shown here in this table. Temperatures are given in kelvins, which has the same incremental span as degrees Celsius (an increase or decrease of 1 kelvin is the same amount of temperature change as 1° Celsius), only offset so that 0 K is absolute zero. This way, we don't have to deal with a lot of negative figures.

```
Material       Element/Alloy    Critical temp.(K)
=========================================================
Aluminum -------- Element --------------- 1.20
Cadmium --------- Element --------------- 0.56
Lead ------------ Element --------------- 7.2
Mercury --------- Element --------------- 4.16
Niobium --------- Element --------------- 8.70
Thorium --------- Element --------------- 1.37
Tin ------------- Element --------------- 3.72
Titanium -------- Element --------------- 0.39
Uranium --------- Element --------------- 1.0
Zinc ------------ Element --------------- 0.91
Niobium/Tin ------ Alloy ---------------- 18.1
Cupric sulphide - Compound -------------- 1.6
```

Superconducting materials also interact in interesting ways with magnetic fields. While in the superconducting state, a superconducting material will tend to exclude all magnetic fields, a phenomenon known as the *Meissner effect*. However, if the magnetic field strength intensifies beyond a critical level, the superconducting material will be rendered non-superconductive. In other words, superconducting materials will lose their superconductivity (no matter how cold you make them) if exposed to too strong of a magnetic field. In fact, the presence of *any* magnetic field tends to lower the critical temperature of any superconducting material: the more magnetic field present, the colder you have to make the material before it will superconduct.

This is another practical limitation to superconductors in circuit design, since electric current through any conductor produces a magnetic field. Even though a superconducting wire would have zero resistance to oppose current, there will still be a *limit* of how much current could practically go through that wire due to its critical magnetic field limit.

There are already a few industrial applications of superconductors, especially since the recent (1987) advent of the yttrium-barium-copper-oxygen ceramic, which only requires liquid nitrogen to cool, as opposed to liquid helium. It is even possible to order superconductivity kits from educational suppliers which can be operated in high school labs (liquid nitrogen not included). Typically, these kits exhibit superconductivity by the Meissner effect, suspending a tiny magnet in mid-air over a superconducting disk cooled by a bath of liquid nitrogen.

The zero resistance offered by superconducting circuits leads to unique consequences. In a superconducting short-circuit, it is possible to maintain large currents indefinitely with zero applied voltage!

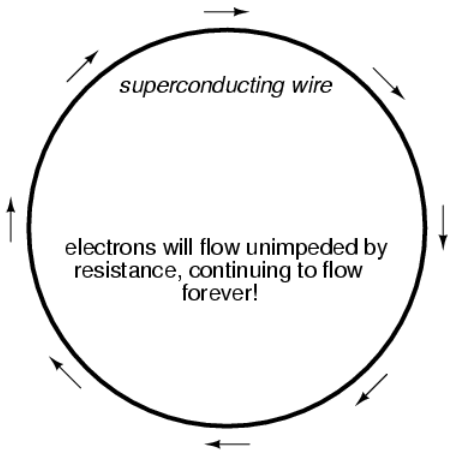

Rings of superconducting material have been experimentally proven to sustain continuous current for years with no applied voltage. So far as anyone knows, there is no theoretical time limit to how long an unaided current could be sustained in a superconducting circuit. If you're thinking this appears to be a form of *perpetual motion*, you're correct! Contrary to popular belief, there is no law of physics prohibiting perpetual motion; rather, the prohibition stands against any machine or system generating more energy than it consumes (what would be referred to as an *over-unity* device). At best, all a perpetual motion machine (like the superconducting ring) would be good for is to *store* energy, not *generate* it freely!

Superconductors also offer some strange possibilities having nothing to do with Ohm's Law. One such possibility is the construction of a device called a Josephson Junction, which acts as a relay of sorts, controlling one current with another current (with no moving parts, of course). The small size and fast switching time of Josephson Junctions may lead to new computer circuit designs: an alternative to using semiconductor transistors.

Review

- Superconductors are materials which have absolutely zero electrical resistance.
- All presently known superconductive materials need to be cooled far below ambient temperature to superconduct. The maximum temperature at which they do so is called the *transition temperature*.

This page titled 12.7: Superconductivity is shared under a GNU Free Documentation License 1.3 license and was authored, remixed, and/or curated by Tony R. Kuphaldt (All About Circuits) via source content that was edited to the style and standards of the LibreTexts platform.

12.8: Insulator Breakdown Voltage

Once current is forced through an insulating material, *breakdown* of that material's molecular structure has occurred. After breakdown, the material may or may not behave as an insulator any more, the molecular structure having been altered by the breach. There is usually a localized "puncture" of the insulating medium where the electrons flowed during breakdown.

Thickness of an insulating material plays a role in determining its breakdown voltage, otherwise known as *dielectric strength*. Specific dielectric strength is sometimes listed in terms of volts per mil (1/1000 of an inch), or kilovolts per inch (the two units are equivalent), but in practice it has been found that the relationship between breakdown voltage and thickness is not exactly linear. An insulator three times as thick has a dielectric strength slightly less than 3 times as much. However, for rough estimation use, volt-per-thickness ratings are fine.

```
Material*     Dielectric strength (kV/inch)
=========================================
Vacuum ------------------- 20
Air ---------------------- 20 to 75
Porcelain ---------------- 40 to 200
Paraffin Wax ------------- 200 to 300
Transformer Oil ---------- 400
Bakelite ----------------- 300 to 550
Rubber ------------------- 450 to 700
Shellac ------------------ 900
Paper -------------------- 1250
Teflon ------------------- 1500
Glass -------------------- 2000 to 3000
Mica --------------------- 5000
* = Materials listed are specially prepared for electrical use.
```

Review

- With a high enough applied voltage, electrons can be freed from the atoms of insulating materials, resulting in current through that material.
- The minimum voltage required to "violate" an insulator by forcing current through it is called the *breakdown voltage*, or *dielectric strength*.
- The thicker a piece of insulating material, the higher the breakdown voltage, all other factors being equal.
- Specific dielectric strength is typically rated in one of two equivalent units: volts per mil, or kilovolts per inch.

This page titled 12.8: Insulator Breakdown Voltage is shared under a GNU Free Documentation License 1.3 license and was authored, remixed, and/or curated by Tony R. Kuphaldt (All About Circuits) via source content that was edited to the style and standards of the LibreTexts platform.

CHAPTER OVERVIEW

13: Capacitors

Topic hierarchy

13.1: Electric Fields and Capacitance
13.2: Capacitors and Calculus
13.3: Factors Affecting Capacitance
13.4: Series and Parallel Capacitors
13.5: Practical Considerations - Capacitors

This page titled 13: Capacitors is shared under a GNU Free Documentation License 1.3 license and was authored, remixed, and/or curated by Tony R. Kuphaldt (All About Circuits) via source content that was edited to the style and standards of the LibreTexts platform.

13.1: Electric Fields and Capacitance

Admittedly, the concept of a “field” is somewhat abstract. At least with electric current it isn’t too difficult to envision tiny particles called electrons moving their way between the nuclei of atoms within a conductor, but a “field” doesn’t even have mass, and need not exist within matter at all.

Despite its abstract nature, almost every one of us has direct experience with fields, at least in the form of magnets. Have you ever played with a pair of magnets, noticing how they attract or repel each other depending on their relative orientation? There is an undeniable force between a pair of magnets, and this force is without “substance.” It has no mass, no color, no odor, and if not for the physical force exerted on the magnets themselves, it would be utterly insensible to our bodies. Physicists describe the interaction of magnets in terms of *magnetic fields* in the space between them. If iron filings are placed near a magnet, they orient themselves along the lines of the field, visually indicating its presence.

The Electric Fields

The subject of this chapter is *electric* fields (and devices called *capacitors* that exploit them), not *magnetic*fields, but there are many similarities. Most likely you have experienced electric fields as well. Chapter 1 of this book began with an explanation of static electricity, and how materials such as wax and wool—when rubbed against each other—produced a physical attraction. Again, physicists would describe this interaction in terms of *electric fields* generated by the two objects as a result of their electron imbalances. Suffice it to say that whenever a voltage exists between two points, there will be an electric field manifested in the space between those points.

The Field Force and the Field Flux

Fields have two measures: a field *force* and a field *flux*. The field *force* is the amount of “push” that a field exerts over a certain distance. The field *flux* is the total quantity, or effect, of the field through space. Field force and flux are roughly analogous to voltage (“push”) and current (flow) through a conductor, respectively, although field flux can exist in totally empty space (without the motion of particles such as electrons) whereas current can only take place where there are free electrons to move. Field flux can be opposed in space, just as the flow of electrons can be opposed by resistance. The amount of field flux that will develop in space is proportional to the amount of field force applied, divided by the amount of opposition to flux. Just as the type of conducting material dictates that conductor’s specific resistance to electric current, the type of insulating material separating two conductors dictates the specific opposition to field flux.

Normally, electrons cannot enter a conductor unless there is a path for an equal amount of electrons to exit (remember the marble-in-tube analogy?). This is why conductors must be connected together in a circular path (a circuit) for continuous current to occur. Oddly enough, however, extra electrons can be “squeezed” into a conductor without a path to exit if an electric field is allowed to develop in space relative to another conductor. The number of extra free electrons added to the conductor (or free electrons taken away) is directly proportional to the amount of field flux between the two conductors.

The Capacitors Electric Field

Capacitors are components designed to take advantage of this phenomenon by placing two conductive plates (usually metal) in close proximity with each other. There are many different styles of capacitor construction, each one suited for particular ratings and purposes. For very small capacitors, two circular plates sandwiching an insulating material will suffice. For larger capacitor values, the “plates” may be strips of metal foil, sandwiched around a flexible insulating medium and rolled up for compactness. The highest capacitance values are obtained by using a microscopic-thickness layer of insulating oxide separating two conductive surfaces. In any case, though, the general idea is the same: two conductors, separated by an insulator.

The schematic symbol for a capacitor is quite simple, being little more than two short, parallel lines (representing the plates) separated by a gap. Wires attach to the respective plates for connection to other components. An older, obsolete schematic symbol for capacitors showed interleaved plates, which is actually a more accurate way of representing the real construction of most capacitors:

Capacitor symbols

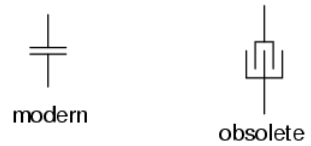

When a voltage is applied across the two plates of a capacitor, a concentrated field flux is created between them, allowing a significant difference of free electrons (a charge) to develop between the two plates:

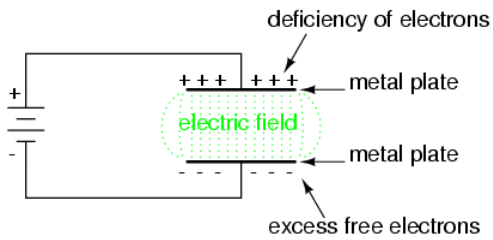

As the electric field is established by the applied voltage, extra free electrons are forced to collect on the negative conductor, while free electrons are "robbed" from the positive conductor. This differential charge equates to a storage of energy in the capacitor, representing the potential charge of the electrons between the two plates. The greater the difference of electrons on opposing plates of a capacitor, the greater the field flux, and the greater "charge" of energy the capacitor will store.

Because capacitors store the potential energy of accumulated electrons in the form of an electric field, they behave quite differently than resistors (which simply dissipate energy in the form of heat) in a circuit. Energy storage in a capacitor is a function of the voltage between the plates, as well as other factors which we will discuss later in this chapter. A capacitor's ability to store energy as a function of voltage (potential difference between the two leads) results in a tendency to try to maintain voltage at a constant level. In other words, capacitors tend to resist *changes* in voltage drop. When voltage across a capacitor is increased or decreased, the capacitor "resists" the *change* by drawing current from or supplying current to the source of the voltage change, in opposition to the *change*.

To store more energy in a capacitor, the voltage across it must be increased. This means that more electrons must be added to the (-) plate and more taken away from the (+) plate, necessitating a current in that direction. Conversely, to release energy from a capacitor, the voltage across it must be decreased. This means some of the excess electrons on the (-) plate must be returned to the (+) plate, necessitating a current in the other direction.

Just as Isaac Newton's first Law of Motion ("an object in motion tends to stay in motion; an object at rest tends to stay at rest") describes the tendency of a mass to oppose changes in velocity, we can state a capacitor's tendency to oppose changes in voltage as such: "A charged capacitor tends to stay charged; a discharged capacitor tends to stay discharged." Hypothetically, a capacitor left untouched will indefinitely maintain whatever state of voltage charge that its been left it. Only an outside source (or drain) of current can alter the voltage charge stored by a perfect capacitor:

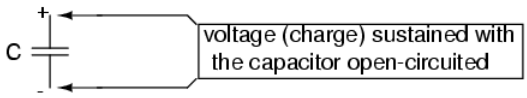

Practically speaking, however, capacitors will eventually lose their stored voltage charges due to internal leakage paths for electrons to flow from one plate to the other. Depending on the specific type of capacitor, the time it takes for a stored voltage charge to self-dissipate can be a *long* time (several years with the capacitor sitting on a shelf!).

When the voltage across a capacitor is increased, it draws current from the rest of the circuit, acting as a power load. In this condition the capacitor is said to be *charging*, because there is an increasing amount of energy being stored in its electric field. Note the direction of electron current with regard to the voltage polarity:

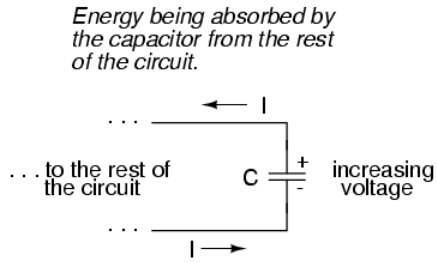

The capacitor acts as a LOAD

Conversely, when the voltage across a capacitor is decreased, the capacitor supplies current to the rest of the circuit, acting as a power source. In this condition the capacitor is said to be *discharging*. Its store of energy—held in the electric field—is decreasing now as energy is released to the rest of the circuit. Note the direction of electron current with regard to the voltage polarity:

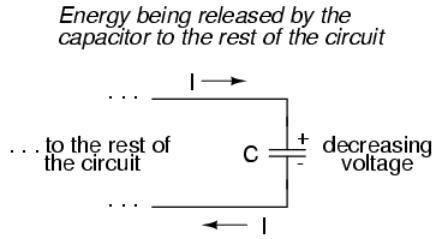

The capacitor acts as a SOURCE

If a source of voltage is suddenly applied to an uncharged capacitor (a sudden increase of voltage), the capacitor will draw current from that source, absorbing energy from it, until the capacitor's voltage equals that of the source. Once the capacitor voltage reached this final (charged) state, its current decays to zero. Conversely, if a load resistance is connected to a charged capacitor, the capacitor will supply current to the load, until it has released all its stored energy and its voltage decays to zero. Once the capacitor voltage reaches this final (discharged) state, its current decays to zero. In their ability to be charged and discharged, capacitors can be thought of as acting somewhat like secondary-cell batteries.

The choice of insulating material between the plates, as was mentioned before, has a great impact upon how much field flux (and therefore how much charge) will develop with any given amount of voltage applied across the plates. Because of the role of this insulating material in affecting field flux, it has a special name: *dielectric*. Not all dielectric materials are equal: the extent to which materials inhibit or encourage the formation of electric field flux is called the *permittivity* of the dielectric.

The measure of a capacitor's ability to store energy for a given amount of voltage drop is called *capacitance*. Not surprisingly, capacitance is also a measure of the intensity of opposition to changes in voltage (exactly how much current it will produce for a given rate of change in voltage). Capacitance is symbolically denoted with a capital "C," and is measured in the unit of the Farad, abbreviated as "F."

Convention, for some odd reason, has favored the metric prefix "micro" in the measurement of large capacitances, and so many capacitors are rated in terms of confusingly large microFarad values: for example, one large capacitor I have seen was rated 330,000 microFarads!! Why not state it as 330 milliFarads? I don't know.

The Capacitor's Obsolete Name

An obsolete name for a capacitor is *condenser* or *condensor*. These terms are not used in any new books or schematic diagrams (to my knowledge), but they might be encountered in older electronics literature. Perhaps the most well-known usage for the term "condenser" is in automotive engineering, where a small capacitor called by that name was used to mitigate excessive sparking across the switch contacts (called "points") in electromechanical ignition systems.

Review

- Capacitors react against changes in voltage by supplying or drawing current in the direction necessary to oppose the change.
- When a capacitor is faced with an increasing voltage, it acts as a *load*: drawing current as it absorbs energy (current going in the negative side and out the positive side, like a resistor).

- When a capacitor is faced with a decreasing voltage, it acts as a *source*: supplying current as it releases stored energy (current going out the negative side and in the positive side, like a battery).
- The ability of a capacitor to store energy in the form of an electric field (and consequently to oppose changes in voltage) is called *capacitance*. It is measured in the unit of the *Farad* (F).
- Capacitors used to be commonly known by another term: *condenser* (alternatively spelled “condensor”).

This page titled 13.1: Electric Fields and Capacitance is shared under a GNU Free Documentation License 1.3 license and was authored, remixed, and/or curated by Tony R. Kuphaldt (All About Circuits) via source content that was edited to the style and standards of the LibreTexts platform.

13.2: Capacitors and Calculus

Capacitors do not have a stable "resistance" as conductors do. However, there is a definite mathematical relationship between voltage and current for a capacitor, as follows:

"Ohm's Law" for a capacitor

$$i = C\frac{dv}{dt}$$

Where,

i = Instantaneous current through the capacitor

C = Capacitance in Farads

$\frac{dv}{dt}$ = Instantaneous rate of voltage change (volts per second)

The lower-case letter "i" symbolizes *instantaneous* current, which means the amount of current at a specific point in time. This stands in contrast to constant current or average current (capital letter "I") over an unspecified period of time. The expression "dv/dt" is one borrowed from calculus, meaning the instantaneous rate of voltage change over time, or the rate of change of voltage (volts per second increase or decrease) at a specific point in time, the same specific point in time that the instantaneous current is referenced at. For whatever reason, the letter *v* is usually used to represent instantaneous voltage rather than the letter *e*. However, it would not be incorrect to express the instantaneous voltage rate-of-change as "de/dt" instead.

In this equation we see something novel to our experience thus far with electric circuits: the variable of *time*. When relating the quantities of voltage, current, and resistance to a resistor, it doesn't matter if we're dealing with measurements taken over an unspecified period of time (E=IR; V=IR), or at a specific moment in time (e=ir; v=ir). The same basic formula holds true, because time is irrelevant to voltage, current, and resistance in a component like a resistor.

In a capacitor, however, time is an essential variable, because current is related to how *rapidly* voltage changes over time. To fully understand this, a few illustrations may be necessary. Suppose we were to connect a capacitor to a variable-voltage source, constructed with a potentiometer and a battery:

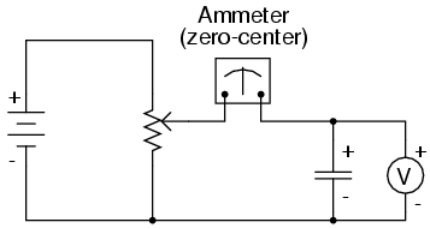

If the potentiometer mechanism remains in a single position (wiper is stationary), the voltmeter connected across the capacitor will register a constant (unchanging) voltage, and the ammeter will register 0 amps. In this scenario, the instantaneous rate of voltage change (dv/dt) is equal to zero, because the voltage is unchanging. The equation tells us that with 0 volts per second change for a dv/dt, there must be zero instantaneous current (i). From a physical perspective, with no change in voltage, there is no need for any electron motion to add or subtract charge from the capacitor's plates, and thus there will be no current.

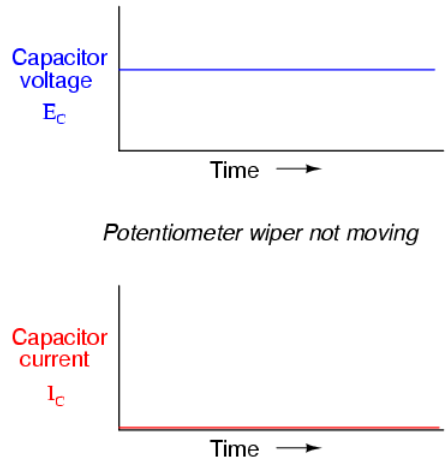

Now, if the potentiometer wiper is moved slowly and steadily in the “up” direction, a greater voltage will gradually be imposed across the capacitor. Thus, the voltmeter indication will be increasing at a slow rate:

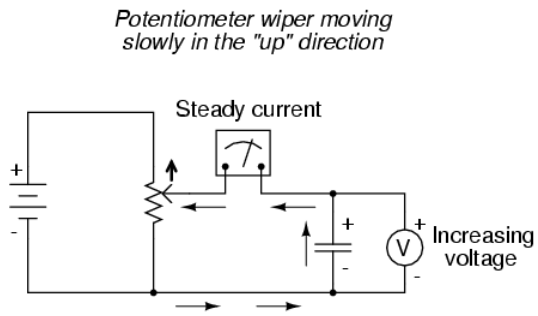

If we assume that the potentiometer wiper is being moved such that the *rate* of voltage increase across the capacitor is steady (for example, voltage increasing at a constant rate of 2 volts per second), the dv/dt term of the formula will be a fixed value. According to the equation, this fixed value of dv/dt, multiplied by the capacitor’s capacitance in Farads (also fixed), results in a fixed current of some magnitude. From a physical perspective, an increasing voltage across the capacitor demands that there be an increasing charge differential between the plates. Thus, for a slow, steady voltage increase rate, there must be a slow, steady rate of charge building in the capacitor, which equates to a slow, steady flow rate of electrons, or current. In this scenario, the capacitor is acting as a *load*, with electrons entering the negative plate and exiting the positive, accumulating energy in the electric field.

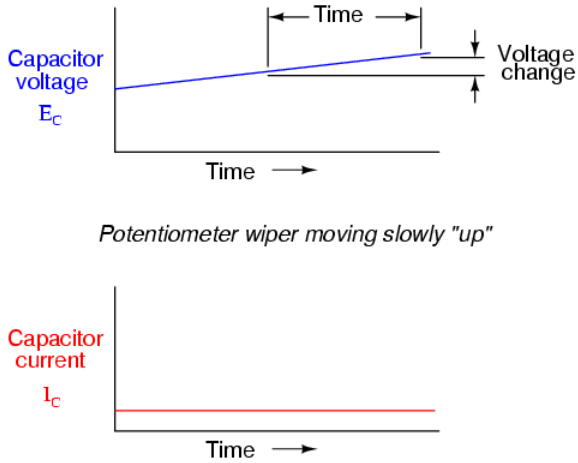

If the potentiometer is moved in the same direction, but at a faster rate, the rate of voltage change (dv/dt) will be greater and so will be the capacitor’s current:

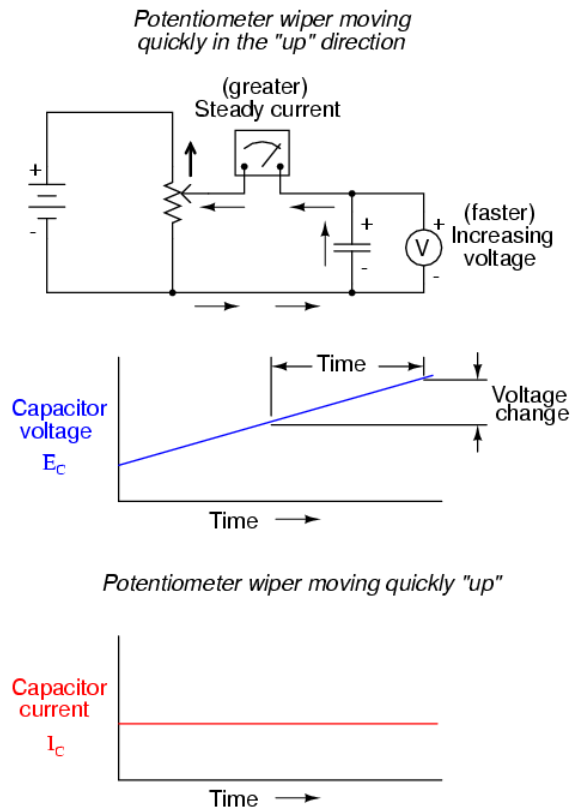

When mathematics students first study calculus, they begin by exploring the concept of *rates of change* for various mathematical functions. The *derivative*, which is the first and most elementary calculus principle, is an expression of one variable's rate of change in terms of another. Calculus students have to learn this principle while studying abstract equations. You get to learn this principle while studying something you can relate to: electric circuits!

To put this relationship between voltage and current in a capacitor in calculus terms, the current through a capacitor is the *derivative* of the voltage across the capacitor with respect to time. Or, stated in simpler terms, a capacitor's current is directly proportional to how quickly the voltage across it is changing. In this circuit where capacitor voltage is set by the position of a rotary knob on a potentiometer, we can say that the capacitor's current is directly proportional to how quickly we turn the knob.

If we were to move the potentiometer's wiper in the same direction as before ("up"), but at varying rates, we would obtain graphs that looked like this:

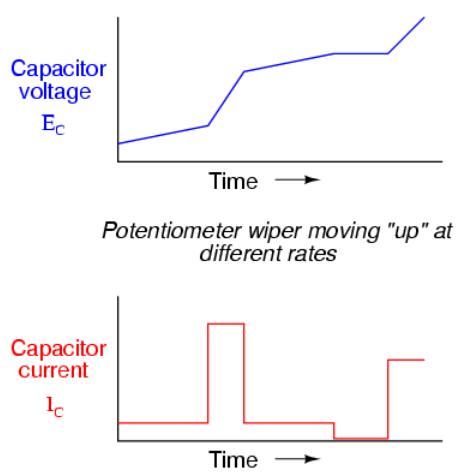

Note how that at any given point in time, the capacitor's current is proportional to the rate-of-change, or *slope* of the capacitor's voltage plot. When the voltage plot line is rising quickly (steep slope), the current will likewise be great. Where the voltage plot has

a mild slope, the current is small. At one place in the voltage plot where it levels off (zero slope, representing a period of time when the potentiometer wasn't moving), the current falls to zero.

If we were to move the potentiometer wiper in the "down" direction, the capacitor voltage would *decrease*rather than increase. Again, the capacitor will react to this change of voltage by producing a current, but this time the current will be in the opposite direction. A decreasing capacitor voltage requires that the charge differential between the capacitor's plates be reduced, and the only way that can happen is if the electrons reverse their direction of flow, the capacitor discharging rather than charging. In this condition, with electrons exiting the negative plate and entering the positive, the capacitor will act as a *source*, like a battery, releasing its stored energy to the rest of the circuit.

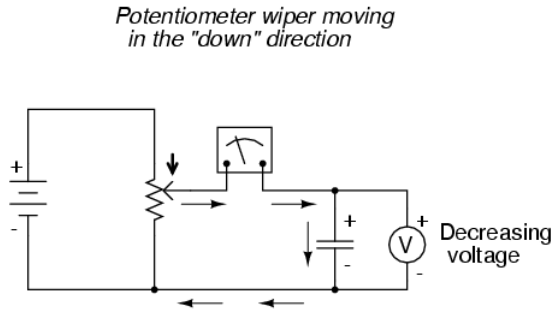

Again, the amount of current through the capacitor is directly proportional to the rate of voltage change across it. The only difference between the effects of a *decreasing* voltage and an *increasing* voltage is the *direction* of electron flow. For the same rate of voltage change over time, either increasing or decreasing, the current magnitude (amps) will be the same. Mathematically, a decreasing voltage rate-of-change is expressed as a *negative* dv/dt quantity. Following the formula i = C(dv/dt), this will result in a current figure (i) that is likewise negative in sign, indicating a direction of flow corresponding to discharge of the capacitor.

This page titled 13.2: Capacitors and Calculus is shared under a GNU Free Documentation License 1.3 license and was authored, remixed, and/or curated by Tony R. Kuphaldt (All About Circuits) via source content that was edited to the style and standards of the LibreTexts platform.

13.3: Factors Affecting Capacitance

There are three basic factors of capacitor construction determining the amount of capacitance created. These factors all dictate capacitance by affecting how much electric field flux (relative difference of electrons between plates) will develop for a given amount of electric field force (voltage between the two plates):

PLATE AREA: All other factors being equal, greater plate area gives greater capacitance; less plate area gives less capacitance.

Explanation: Larger plate area results in more field flux (charge collected on the plates) for a given field force (voltage across the plates).

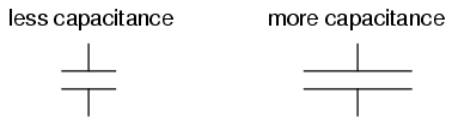

PLATE SPACING: All other factors being equal, further plate spacing gives less capacitance; closer plate spacing gives greater capacitance.

Explanation: Closer spacing results in a greater field force (voltage across the capacitor divided by the distance between the plates), which results in a greater field flux (charge collected on the plates) for any given voltage applied across the plates.

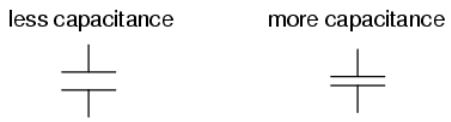

DIELECTRIC MATERIAL: All other factors being equal, greater permittivity of the dielectric gives greater capacitance; less permittivity of the dielectric gives less capacitance.

Explanation: Although its complicated to explain, some materials offer less opposition to field flux for a given amount of field force. Materials with a greater permittivity allow for more field flux (offer less opposition), and thus a greater collected charge, for any given amount of field force (applied voltage).

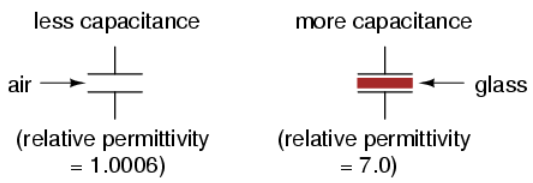

"Relative" permittivity means the permittivity of a material, relative to that of a pure vacuum. The greater the number, the greater the permittivity of the material. Glass, for instance, with a relative permittivity of 7, has seven times the permittivity of a pure vacuum, and consequently will allow for the establishment of an electric field flux seven times stronger than that of a vacuum, all other factors being equal.

The following is a table listing the relative permittivities (also known as the "dielectric constant") of various common substances:

```
Material        Relative permittivity (dielectric constant)
============================================================
Vacuum ------------------------- 1.0000
Air ---------------------------- 1.0006
PTFE, FEP ("Teflon") ----------- 2.0
Polypropylene ------------------ 2.20 to 2.28
ABS resin ---------------------- 2.4 to 3.2
Polystyrene -------------------- 2.45 to 4.0
Waxed paper -------------------- 2.5
Transformer oil ---------------- 2.5 to 4
Hard Rubber -------------------- 2.5 to 4.80
Wood (Oak) --------------------- 3.3
Silicones ---------------------- 3.4 to 4.3
Bakelite ----------------------- 3.5 to 6.0
Quartz, fused ------------------ 3.8
Wood (Maple) ------------------- 4.4
Glass -------------------------- 4.9 to 7.5
Castor oil --------------------- 5.0
Wood (Birch) ------------------- 5.2
Mica, muscovite ---------------- 5.0 to 8.7
Glass-bonded mica -------------- 6.3 to 9.3
Porcelain, Steatite ------------ 6.5
Alumina ------------------------ 8.0 to 10.0
Distilled water ---------------- 80.0
Barium-strontium-titanite ------ 7500
```

An approximation of capacitance for any pair of separated conductors can be found with this formula:

$$C = \frac{\varepsilon A}{d}$$

Where,

$C =$ Capacitance in Farads

$\varepsilon =$ Permittivity of dielectric (absolute, not relative)

$A =$ Area of plate overlap in square meters

$d =$ Distance between plates in meters

A capacitor can be made variable rather than fixed in value by varying any of the physical factors determining capacitance. One relatively easy factor to vary in capacitor construction is that of plate area, or more properly, the amount of plate overlap.

The following photograph shows an example of a variable capacitor using a set of interleaved metal plates and an air gap as the dielectric material:

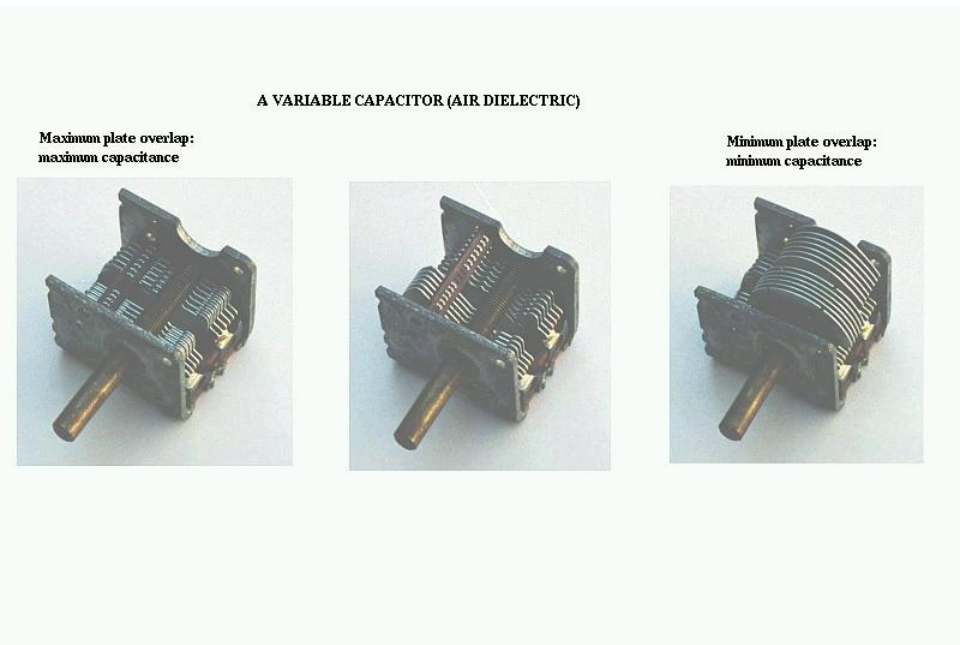

As the shaft is rotated, the degree to which the sets of plates overlap each other will vary, changing the effective area of the plates between which a concentrated electric field can be established. This particular capacitor has a capacitance in the picofarad range, and finds use in radio circuitry.

This page titled 13.3: Factors Affecting Capacitance is shared under a GNU Free Documentation License 1.3 license and was authored, remixed, and/or curated by Tony R. Kuphaldt (All About Circuits) via source content that was edited to the style and standards of the LibreTexts platform.

13.4: Series and Parallel Capacitors

When capacitors are connected in series, the total capacitance is less than any one of the series capacitors' individual capacitances. If two or more capacitors are connected in series, the overall effect is that of a single (equivalent) capacitor having the sum total of the plate spacings of the individual capacitors. As we've just seen, an increase in plate spacing, with all other factors unchanged, results in decreased capacitance.

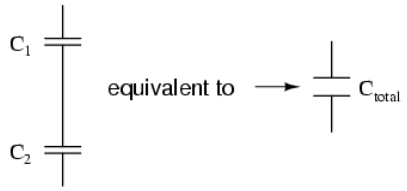

Thus, the total capacitance is less than any one of the individual capacitors' capacitances. The formula for calculating the series total capacitance is the same form as for calculating parallel resistances:

Series Capacitances

$$C_{total} = \frac{1}{\frac{1}{C_1} + \frac{1}{C_2} + \ldots \frac{1}{C_n}}$$

When capacitors are connected in parallel, the total capacitance is the sum of the individual capacitors' capacitances. If two or more capacitors are connected in parallel, the overall effect is that of a single equivalent capacitor having the sum total of the plate areas of the individual capacitors. As we've just seen, an increase in plate area, with all other factors unchanged, results in increased capacitance.

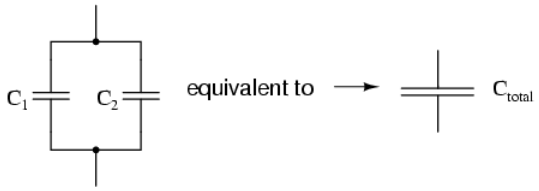

Thus, the total capacitance is more than any one of the individual capacitors' capacitances. The formula for calculating the parallel total capacitance is the same form as for calculating series resistances:

Parallel Capacitances

$$C_{total} = C_1 + C_2 + \ldots C_n$$

As you will no doubt notice, this is exactly opposite of the phenomenon exhibited by resistors. With resistors, series connections result in additive values while parallel connections result in diminished values. With capacitors, its the reverse: parallel connections result in additive values while series connections result in diminished values.

Review

- Capacitances diminish in series.
- Capacitances add in parallel.

This page titled 13.4: Series and Parallel Capacitors is shared under a GNU Free Documentation License 1.3 license and was authored, remixed, and/or curated by Tony R. Kuphaldt (All About Circuits) via source content that was edited to the style and standards of the LibreTexts platform.

13.5: Practical Considerations - Capacitors

Capacitor Working Voltage

Working voltage: Since capacitors are nothing more than two conductors separated by an insulator (the dielectric), you must pay attention to the maximum voltage allowed across it. If too much voltage is applied, the “breakdown” rating of the dielectric material may be exceeded, resulting in the capacitor internally short-circuiting.

Capacitor Polarity

Polarity: Some capacitors are manufactured so they can only tolerate applied voltage in one polarity but not the other. This is due to their construction: the dielectric is a microscopically thin layer of insulation deposited on one of the plates by a DC voltage during manufacture. These are called *electrolytic* capacitors, and their polarity is clearly marked.

Electrolytic ("polarized") capacitor

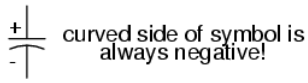

Reversing voltage polarity to an electrolytic capacitor may result in the destruction of that super-thin dielectric layer, thus ruining the device. However, the thinness of that dielectric permits extremely high values of capacitance in a relatively small package size. For the same reason, electrolytic capacitors tend to be low in voltage rating as compared with other types of capacitor construction.

Capacitor Equivalent Circuit

Equivalent circuit: Since the plates in a capacitor have some resistance, and since no dielectric is a perfect insulator, there is no such thing as a “perfect” capacitor. In real life, a capacitor has both a series resistance and a parallel (leakage) resistance interacting with its purely capacitive characteristics:

Capacitor equivalent circuit

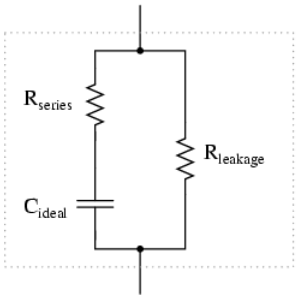

Fortunately, it is relatively easy to manufacture capacitors with very small series resistances and very high leakage resistances!

Capacitor Physical Size

Physical Size: For most applications in electronics, minimum size is the goal for component engineering. The smaller components can be made, the more circuitry can be built into a smaller package, and usually weight is saved as well. With capacitors, there are two major limiting factors to the minimum size of a unit: working voltage and capacitance. And these two factors tend to be in opposition to each other. For any given choice in dielectric materials, the only way to increase the voltage rating of a capacitor is to increase the thickness of the dielectric. However, as we have seen, this has the effect of decreasing capacitance. Capacitance can be brought back up by increasing plate area. but this makes for a larger unit. This is why you cannot judge a capacitor’s rating in Farads simply by size. A capacitor of any given size may be relatively high in capacitance and low in working voltage, vice versa, or some compromise between the two extremes. Take the following two photographs for example:

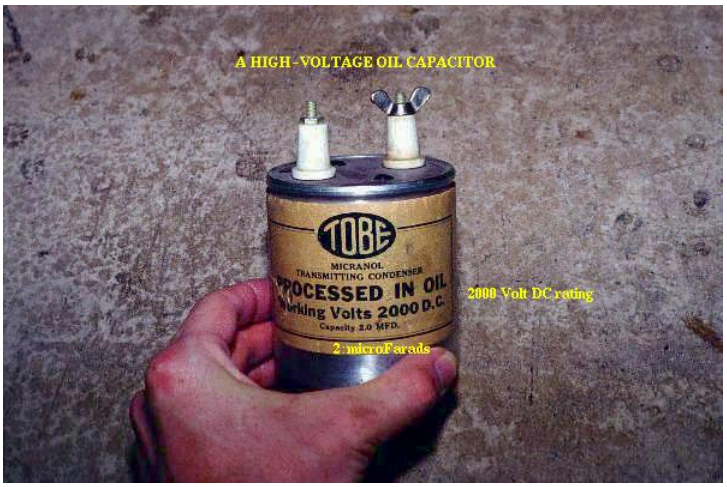

This is a fairly large capacitor in physical size, but it has quite a low capacitance value: only 2 µF. However, its working voltage is quite high: 2000 volts! If this capacitor were re-engineered to have a thinner layer of dielectric between its plates, at least a hundredfold increase in capacitance might be achievable, but at a cost of significantly lowering its working voltage. Compare the above photograph with the one below. The capacitor shown in the lower picture is an electrolytic unit, similar in size to the one above, but with *very* different values of capacitance and working voltage:

The thinner dielectric layer gives it a much greater capacitance (20,000 µF) and a drastically reduced working voltage (35 volts continuous, 45 volts intermittent).

Samples of Different Capacitor Types

Here are some samples of different capacitor types, all smaller than the units shown previously:

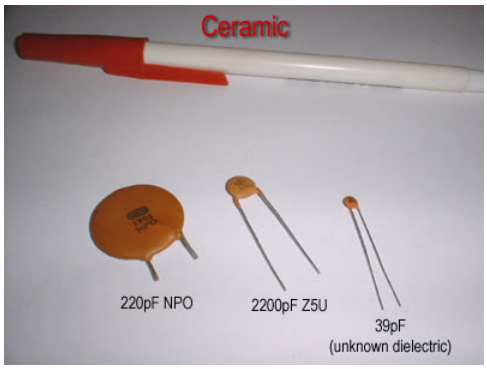

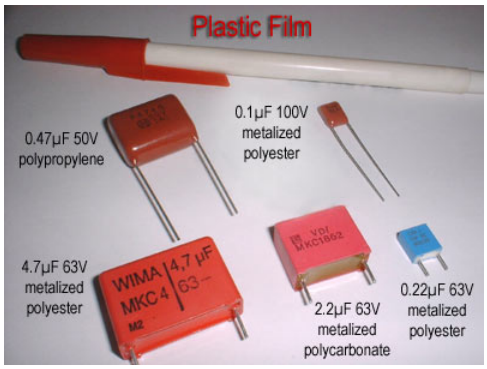

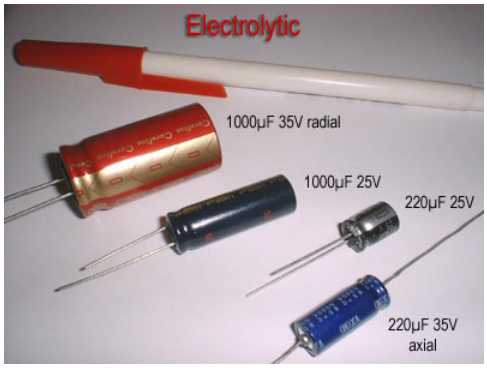

The electrolytic and tantalum capacitors are *polarized* (polarity sensitive), and are always labeled as such. The electrolytic units have their negative (-) leads distinguished by arrow symbols on their cases. Some polarized capacitors have their polarity designated by marking the positive terminal. The large, 20,000 µF electrolytic unit shown in the upright position has its positive (+) terminal labeled with a “plus” mark. Ceramic, mylar, plastic film, and air capacitors do not have polarity markings, because those types are *nonpolarized* (they are not polarity sensitive).

Capacitors are very common components in electronic circuits. Take a close look at the following photograph—every component marked with a “C” designation on the printed circuit board is a capacitor:

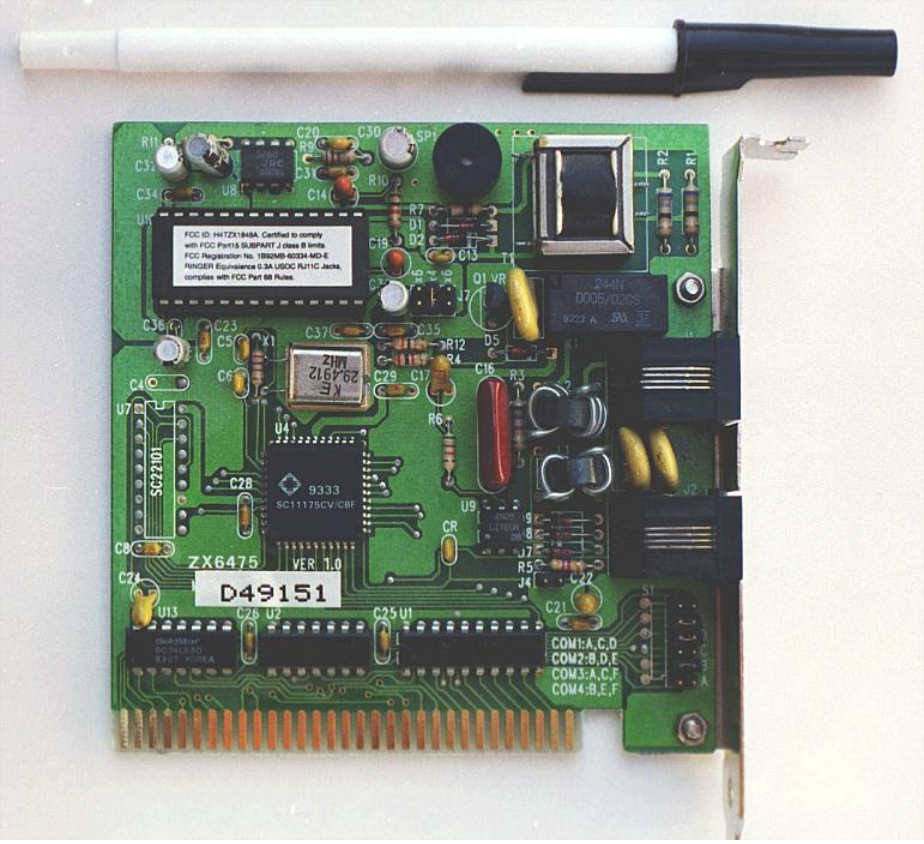

Some of the capacitors shown on this circuit board are standard electrolytic: C_{30} (top of board, center) and C_{36} (left side, 1/3 from the top). Some others are a special kind of electrolytic capacitor called *tantalum*, because this is the type of metal used to make the plates. Tantalum capacitors have relatively high capacitance for their physical size. The following capacitors on the circuit board shown above are tantalum: C_{14} (just to the lower-left of C_{30}), C_{19} (directly below R_{10}, which is below C_{30}), C_{24} (lower-left corner of board), and C_{22} (lower-right).

Examples of even smaller capacitors can be seen in this photograph:

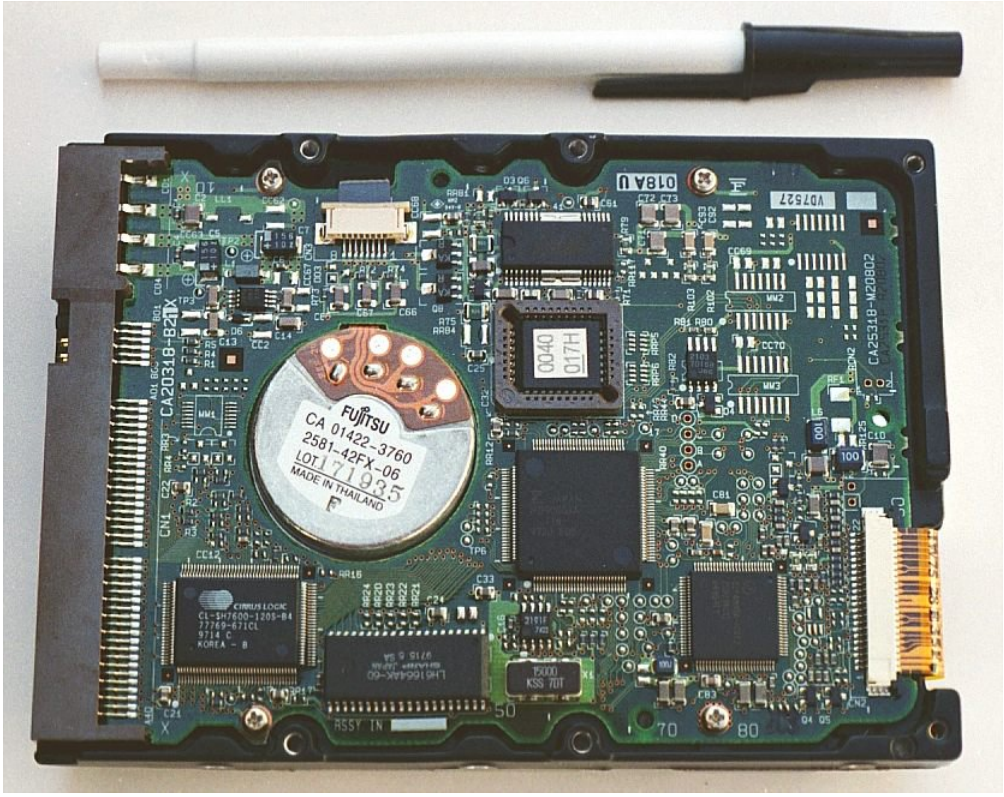

The capacitors on this circuit board are “surface mount devices” as are all the resistors, for reasons of saving space. Following component labeling convention, the capacitors can be identified by labels beginning with the letter “C”.

This page titled 13.5: Practical Considerations - Capacitors is shared under a GNU Free Documentation License 1.3 license and was authored, remixed, and/or curated by Tony R. Kuphaldt (All About Circuits) via source content that was edited to the style and standards of the LibreTexts platform.

CHAPTER OVERVIEW

14: Magnetism and Electromagnetism

14.1: Permanent Magnets
14.2: Electromagnetism
14.3: Magnetic Units of Measurement
14.4: Permeability and Saturation
14.5: Electromagnetic Induction
14.6: Mutual Inductance

This page titled 14: Magnetism and Electromagnetism is shared under a GNU Free Documentation License 1.3 license and was authored, remixed, and/or curated by Tony R. Kuphaldt (All About Circuits) via source content that was edited to the style and standards of the LibreTexts platform.

14.1: Permanent Magnets

Unlike electric charges (such as those observed when amber is rubbed against cloth), magnetic objects possessed two poles of opposite effect, denoted “north” and “south” after their self-orientation to the earth. As Peregrinus found, it was impossible to isolate one of these poles by itself by cutting a piece of lodestone in half: each resulting piece possessed its own pair of poles:

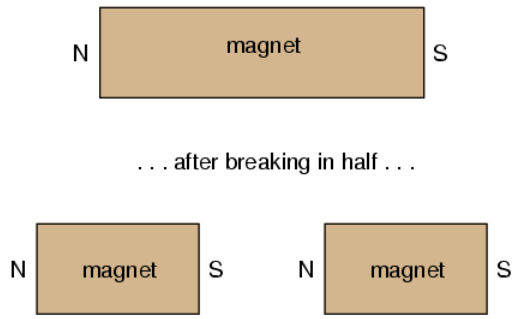

Like electric charges, there were only two types of poles to be found: north and south (by analogy, positive and negative). Just as with electric charges, same poles repel one another, while opposite poles attract. This force, like that caused by static electricity, extended itself invisibly over space, and could even pass through objects such as paper and wood with little effect upon strength.

The philosopher-scientist Rene Descartes noted that this invisible “field” could be mapped by placing a magnet underneath a flat piece of cloth or wood and sprinkling iron filings on top. The filings will align themselves with the magnetic field, “mapping” its shape. The result shows how the field continues unbroken from one pole of a magnet to the other:

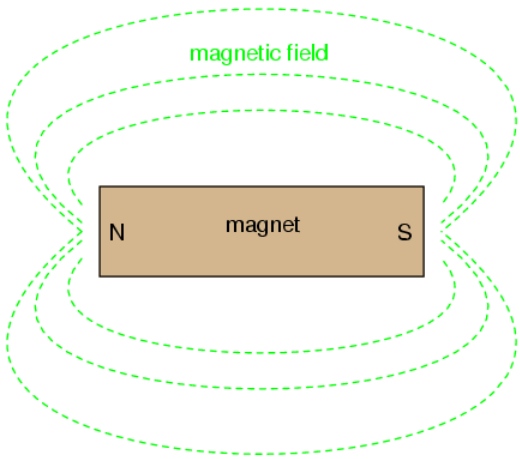

As with any kind of field (electric, magnetic, gravitational), the total quantity, or effect, of the field is referred to as a *flux*, while the “push” causing the flux to form in space is called a *force*. Michael Faraday coined the term “tube” to refer to a string of magnetic flux in space (the term “line” is more commonly used now). Indeed, the measurement of magnetic field flux is often defined in terms of the number of flux lines, although it is doubtful that such fields exist in individual, discrete lines of constant value.

Modern theories of magnetism maintain that a magnetic field is produced by an electric charge in motion, and thus it is theorized that the magnetic field of a so-called “permanent” magnets such as lodestone is the result of electrons within the atoms of iron spinning uniformly in the same direction. Whether or not the electrons in a material’s atoms are subject to this kind of uniform spinning is dictated by the atomic structure of the material (not unlike how electrical conductivity is dictated by the electron binding in a material’s atoms). Thus, only certain types of substances react with magnetic fields, and even fewer have the ability to permanently sustain a magnetic field.

Iron is one of those types of substances that readily magnetizes. If a piece of iron is brought near a permanent magnet, the electrons within the atoms in the iron orient their spins to match the magnetic field force produced by the permanent magnet, and the iron becomes “magnetized.” The iron will magnetize in such a way as to incorporate the magnetic flux lines into its shape, which attracts it toward the permanent magnet, no matter which pole of the permanent magnet is offered to the iron:

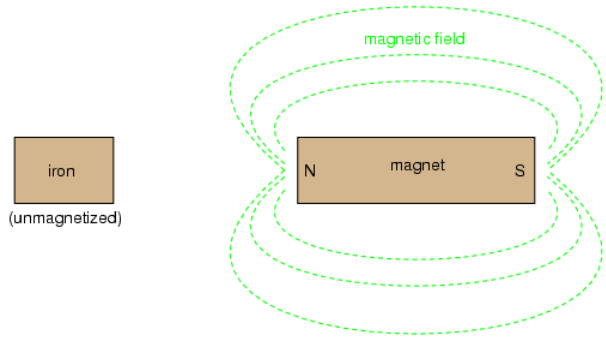

The previously unmagnetized iron becomes magnetized as it is brought closer to the permanent magnet. No matter what pole of the permanent magnet is extended toward the iron, the iron will magnetize in such a way as to be attracted toward the magnet:

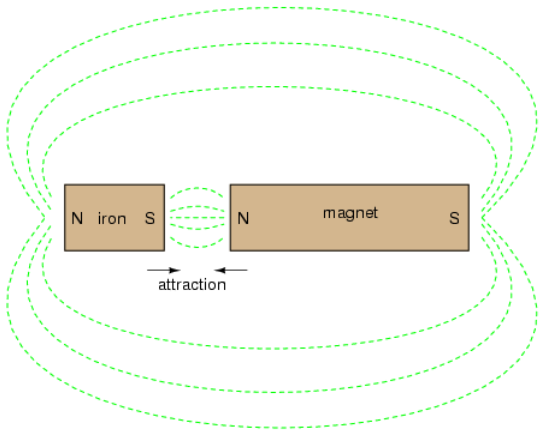

Referencing the natural magnetic properties of iron (Latin = “ferrum”), a *ferromagnetic* material is one that readily magnetizes (its constituent atoms easily orient their electron spins to conform to an external magnetic field force). All materials are magnetic to some degree, and those that are not considered ferromagnetic (easily magnetized) are classified as either *paramagnetic* (slightly magnetic) or *diamagnetic*(tend to exclude magnetic fields). Of the two, diamagnetic materials are the strangest. In the presence of an external magnetic field, they actually become slightly magnetized in the opposite direction, so as to repel the external field!

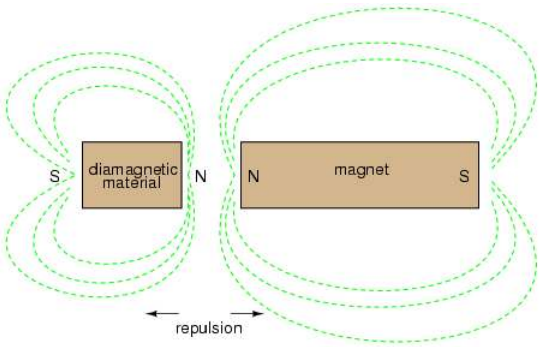

If a ferromagnetic material tends to retain its magnetization after an external field is removed, it is said to have good *retentivity*. This, of course, is a necessary quality for a permanent magnet.

Review

- *Lodestone* (also called *Magnetite*) is a naturally-occurring “permanent” magnet mineral. By “permanent,” it is meant that the material maintains a magnetic field with no external help. The characteristic of any magnetic material to do so is called *retentivity*.
- *Ferromagnetic* materials are easily magnetized.
- *Paramagnetic* materials are magnetized with more difficulty.

- *Diamagnetic* materials actually tend to repel external magnetic fields by magnetizing in the opposite direction.

This page titled 14.1: Permanent Magnets is shared under a GNU Free Documentation License 1.3 license and was authored, remixed, and/or curated by Tony R. Kuphaldt (All About Circuits) via source content that was edited to the style and standards of the LibreTexts platform.

14.2: Electromagnetism

Detailed experiments showed that the magnetic field produced by an electric current is always oriented perpendicular to the direction of flow. A simple method of showing this relationship is called the *left-hand rule*. Simply stated, the left-hand rule says that the magnetic flux lines produced by a current-carrying wire will be oriented the same direction as the curled fingers of a person's left hand (in the "hitchhiking" position), with the thumb pointing in the direction of electron flow:

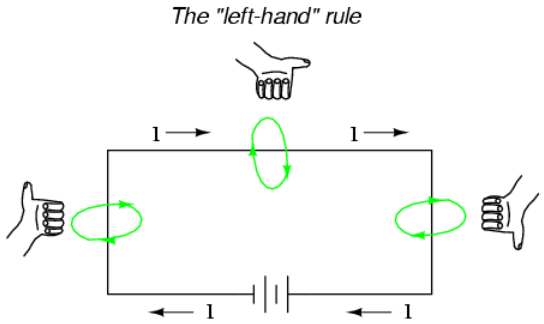

The magnetic field encircles this straight piece of current-carrying wire, the magnetic flux lines having no definite "north" or "south' poles.

While the magnetic field surrounding a current-carrying wire is indeed interesting, it is quite weak for common amounts of current, able to deflect a compass needle and not much more. To create a stronger magnetic field force (and consequently, more field flux) with the same amount of electric current, we can wrap the wire into a coil shape, where the circling magnetic fields around the wire will join to create a larger field with a definite magnetic (north and south) polarity:

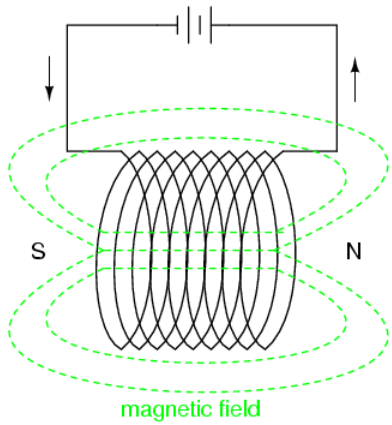

The amount of magnetic field force generated by a coiled wire is proportional to the current through the wire multiplied by the number of "turns" or "wraps" of wire in the coil. This field force is called *magnetomotive force* (mmf), and is very much analogous to electromotive force (E) in an electric circuit.

An *electromagnet* is a piece of wire intended to generate a magnetic field with the passage of electric current through it. Though all current-carrying conductors produce magnetic fields, an electromagnet is usually constructed in such a way as to maximize the strength of the magnetic field it produces for a special purpose. Electromagnets find frequent application in research, industry, medical, and consumer products.

As an electrically-controllable magnet, electromagnets find application in a wide variety of "electromechanical" devices: machines that effect mechanical force or motion through electrical power. Perhaps the most obvious example of such a machine is the *electric motor*.

Another example is the *relay*, an electrically-controlled switch. If a switch contact mechanism is built so that it can be actuated (opened and closed) by the application of a magnetic field, and an electromagnet coil is placed in the near vicinity to produce that

requisite field, it will be possible to open and close the switch by the application of a current through the coil. In effect, this gives us a device that enables electricity to control electricity:

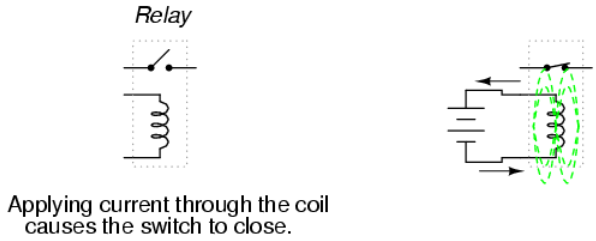

Relays can be constructed to actuate multiple switch contacts, or operate them in “reverse” (energizing the coil will *open* the switch contact, and unpowering the coil will allow it to spring closed again).

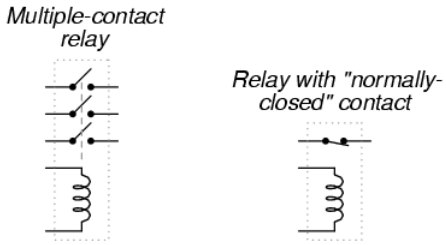

Review

- When electrons flow through a conductor, a magnetic field will be produced around that conductor.
- The left-hand rule states that the magnetic flux lines produced by a current-carrying wire will be oriented the same direction as the curled fingers of a person’s left hand (in the “hitchhiking” position), with the thumb pointing in the direction of electron flow.
- The magnetic field force produced by a current-carrying wire can be greatly increased by shaping the wire into a coil instead of a straight line. If wound in a coil shape, the magnetic field will be oriented along the axis of the coil’s length.
- The magnetic field force produced by an electromagnet (called the *magnetomotive force*, or mmf), is proportional to the product (multiplication) of the current through the electromagnet and the number of complete coil “turns” formed by the wire.

This page titled 14.2: Electromagnetism is shared under a GNU Free Documentation License 1.3 license and was authored, remixed, and/or curated by Tony R. Kuphaldt (All About Circuits) via source content that was edited to the style and standards of the LibreTexts platform.

14.3: Magnetic Units of Measurement

First, we need to become acquainted with the various quantities associated with magnetism. There are quite a few more quantities to be dealt with in magnetic systems than for electrical systems. With electricity, the basic quantities are Voltage (E), Current (I), Resistance (R), and Power (P). The first three are related to one another by Ohm's Law (E=IR ; I=E/R ; R=E/I), while Power is related to voltage, current, and resistance by Joule's Law ($P=IE$; $P=I^2R$; $P=E^2/R$).

With magnetism, we have the following quantities to deal with:

Magnetomotive Force—The quantity of magnetic field force, or "push." Analogous to electric voltage (electromotive force).

Field Flux—The quantity of total field effect, or "substance" of the field. Analogous to electric current.

Field Intensity—The amount of field force (mmf) distributed over the length of the electromagnet. Sometimes referred to as *Magnetizing Force*.

Flux Density—The amount of magnetic field flux concentrated in a given area.

Reluctance—The opposition to magnetic field flux through a given volume of space or material. Analogous to electrical resistance.

Permeability—The specific measure of a material's acceptance of magnetic flux, analogous to the specific resistance of a conductive material (ρ), except inverse (greater permeability means easier passage of magnetic flux, whereas greater specific resistance means more difficult passage of electric current).

But wait . . . the fun is just beginning! Not only do we have more quantities to keep track of with magnetism than with electricity, but we have several different systems of unit measurement for each of these quantities. As with common quantities of length, weight, volume, and temperature, we have both English and metric systems. However, there is actually more than one metric system of units, and multiple metric systems are used in magnetic field measurements! One is called the *cgs*, which stands for **C**entimeter-**G**ram-**S**econd, denoting the root measures upon which the whole system is based. The other was originally known as the *mks* system, which stood for **M**eter-**K**ilogram-**S**econd, which was later revised into another system, called *rmks*, standing for **R**ationalized **M**eter-**K**ilogram-**S**econd. This ended up being adopted as an international standard and renamed *SI* (**S**ysteme **I**nternational).

Quantity	Symbol	Unit of Measurement and abbreviation		
		CGS	SI	English
Field Force	mmf	Gilbert (Gb)	Amp-turn	Amp-turn
Field Flux	Φ	Maxwell (Mx)	Weber (Wb)	Line
Field Intensity	H	Oersted (Oe)	Amp-turns per meter	Amp-turns per inch
Flux Density	B	Gauss (G)	Tesla (T)	Lines per square inch
Reluctance	ℜ	Gilberts per Maxwell	Amp-turns per Weber	Amp-turns per line
Permeability	μ	Gauss per Oersted	Tesla-meters per Amp-turn	Lines per inch-Amp-turn

And yes, the μ symbol is really the same as the metric prefix "micro." I find this especially confusing, using the exact same alphabetical character to symbolize both a specific quantity and a general metric prefix!

As you might have guessed already, the relationship between field force, field flux, and reluctance is much the same as that between the electrical quantities of electromotive force (E), current (I), and resistance (R). This provides something akin to an Ohm's Law for magnetic circuits:

A comparison of "Ohm's Law" for electric and magnetic circuits:

$E = IR$	$mmf = \Phi\Re$
Electrical	Magnetic

And, given that permeability is inversely analogous to specific resistance, the equation for finding the reluctance of a magnetic material is very similar to that for finding the resistance of a conductor:

A comparison of electrical and magnetic opposition:

$R = \rho \frac{l}{A}$	$\Re = \frac{l}{\mu A}$
Electrical	Magnetic

In either case, a longer piece of material provides a greater opposition, all other factors being equal. Also, a larger cross-sectional area makes for less opposition, all other factors being equal.

The major caveat here is that the reluctance of a material to magnetic flux actually *changes* with the concentration of flux going through it. This makes the "Ohm's Law" for magnetic circuits nonlinear and far more difficult to work with than the electrical version of Ohm's Law. It would be analogous to having a resistor that changed resistance as the current through it varied (a circuit composed of *var*istors instead of *res*istors).

This page titled 14.3: Magnetic Units of Measurement is shared under a GNU Free Documentation License 1.3 license and was authored, remixed, and/or curated by Tony R. Kuphaldt (All About Circuits) via source content that was edited to the style and standards of the LibreTexts platform.

14.4: Permeability and Saturation

The nonlinearity of material permeability may be graphed for better understanding. We'll place the quantity of field intensity (H), equal to field force (mmf) divided by the length of the material, on the horizontal axis of the graph. On the vertical axis, we'll place the quantity of flux density (B), equal to total flux divided by the cross-sectional area of the material. We will use the quantities of field intensity (H) and flux density (B) instead of field force (mmf) and total flux (Φ) so that the shape of our graph remains independent of the physical dimensions of our test material. What we're trying to do here is show a mathematical relationship between field force and flux for *any* chunk of a particular substance, in the same spirit as describing a material's *specific resistance* in ohm-cmil/ft instead of its actual *resistance* in ohms.

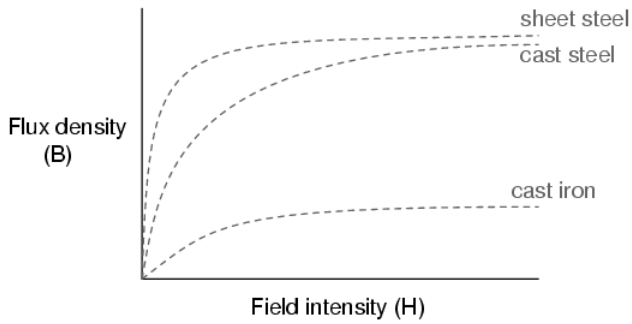

This is called the *normal magnetization curve*, or *B-H curve*, for any particular material. Notice how the flux density for any of the above materials (cast iron, cast steel, and sheet steel) levels off with increasing amounts of field intensity. This effect is known as *saturation*. When there is little applied magnetic force (low H), only a few atoms are in alignment, and the rest are easily aligned with additional force. However, as more flux gets crammed into the same cross-sectional area of a ferromagnetic material, fewer atoms are available within that material to align their electrons with additional force, and so it takes more and more force (H) to get less and less "help" from the material in creating more flux density (B). To put this in economic terms, we're seeing a case of diminishing returns (B) on our investment (H). Saturation is a phenomenon limited to iron-core electromagnets. Air-core electromagnets don't saturate, but on the other hand they don't produce nearly as much magnetic flux as a ferromagnetic core for the same number of wire turns and current.

Another quirk to confound our analysis of magnetic flux versus force is the phenomenon of magnetic *hysteresis*. As a general term, hysteresis means a lag between input and output in a system upon a change in direction. Anyone who's ever driven an old automobile with "loose" steering knows what hysteresis is: to change from turning left to turning right (or vice versa), you have to rotate the steering wheel an additional amount to overcome the built-in "lag" in the mechanical linkage system between the steering wheel and the front wheels of the car. In a magnetic system, hysteresis is seen in a ferromagnetic material that tends to stay magnetized after an applied field force has been removed (see "retentivity" in the first section of this chapter), if the force is reversed in polarity.

Let's use the same graph again, only extending the axes to indicate both positive and negative quantities. First we'll apply an increasing field force (current through the coils of our electromagnet). We should see the flux density increase (go up and to the right) according to the normal magnetization curve:

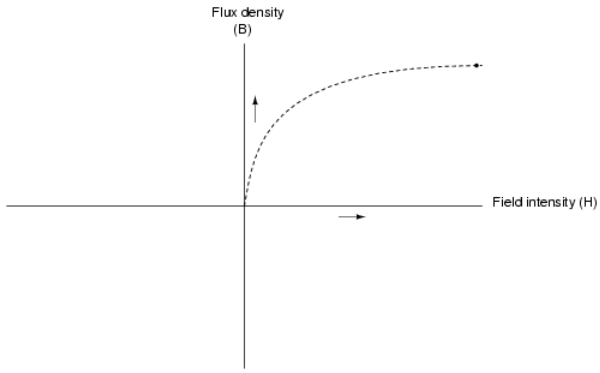

Next, we'll stop the current going through the coil of the electromagnet and see what happens to the flux, leaving the first curve still on the graph:

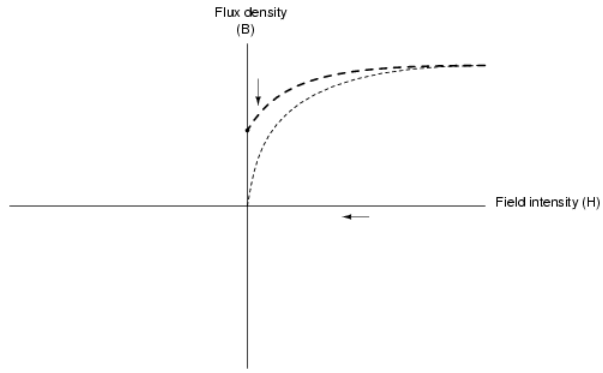

Due to the retentivity of the material, we still have a magnetic flux with no applied force (no current through the coil). Our electromagnet core is acting as a permanent magnet at this point. Now we will slowly apply the same amount of magnetic field force in the *opposite* direction to our sample:

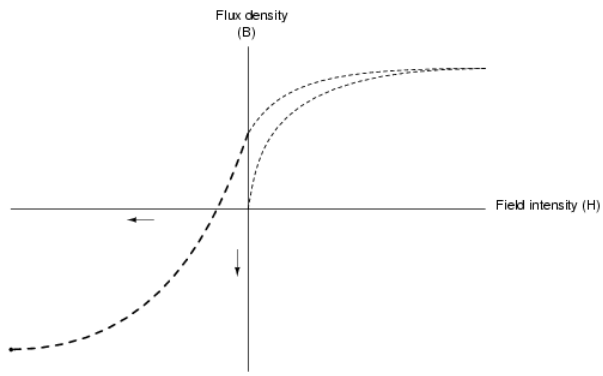

The flux density has now reached a point equivalent to what it was with a full positive value of field intensity (H), except in the negative, or opposite, direction. Let's stop the current going through the coil again and see how much flux remains:

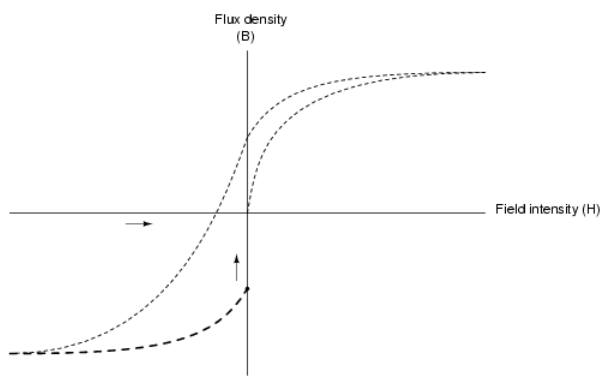

Once again, due to the natural retentivity of the material, it will hold a magnetic flux with no power applied to the coil, except this time its in a direction opposite to that of the last time we stopped current through the coil. If we re-apply power in a positive direction again, we should see the flux density reach its prior peak in the upper-right corner of the graph again:

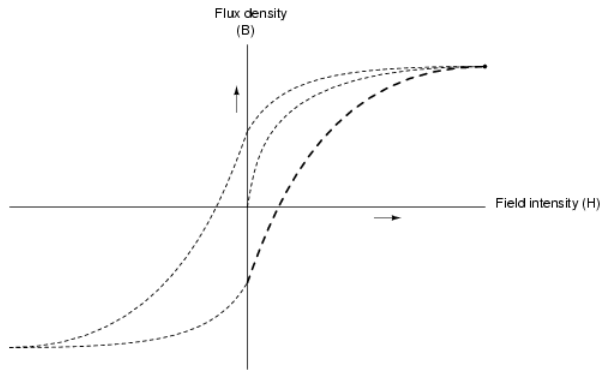

The “S”-shaped curve traced by these steps form what is called the *hysteresis curve* of a ferromagnetic material for a given set of field intensity extremes (-H and +H). If this doesn’t quite make sense, consider a hysteresis graph for the automobile steering scenario described earlier, one graph depicting a “tight” steering system and one depicting a “loose” system:

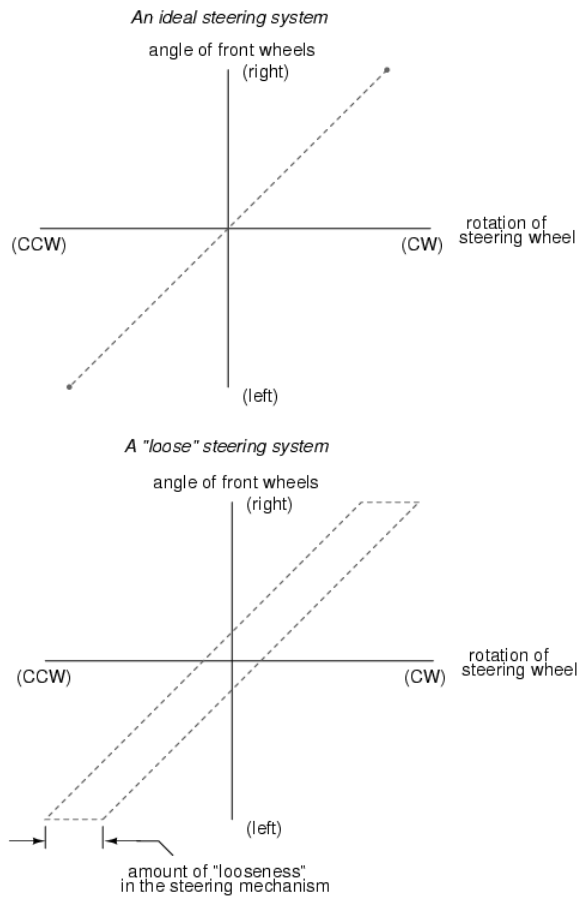

Just as in the case of automobile steering systems, hysteresis can be a problem. If you’re designing a system to produce precise amounts of magnetic field flux for given amounts of current, hysteresis may hinder this design goal (due to the fact that the amount of flux density would depend on the current *and* how strongly it was magnetized before!). Similarly, a loose steering system is unacceptable in a race car, where precise, repeatable steering response is a necessity. Also, having to overcome prior magnetization in an electromagnet can be a waste of energy if the current used to energize the coil is alternating back and forth (AC). The area within the hysteresis curve gives a rough estimate of the amount of this wasted energy.

Other times, magnetic hysteresis is a desirable thing. Such is the case when magnetic materials are used as a means of storing information (computer disks, audio and video tapes). In these applications, it is desirable to be able to magnetize a speck of iron oxide (ferrite) and rely on that material’s retentivity to “remember” its last magnetized state. Another productive application for

magnetic hysteresis is in filtering high-frequency electromagnetic “noise” (rapidly alternating surges of voltage) from signal wiring by running those wires through the middle of a ferrite ring. The energy consumed in overcoming the hysteresis of ferrite attenuates the strength of the “noise” signal. Interestingly enough, the hysteresis curve of ferrite is quite extreme:

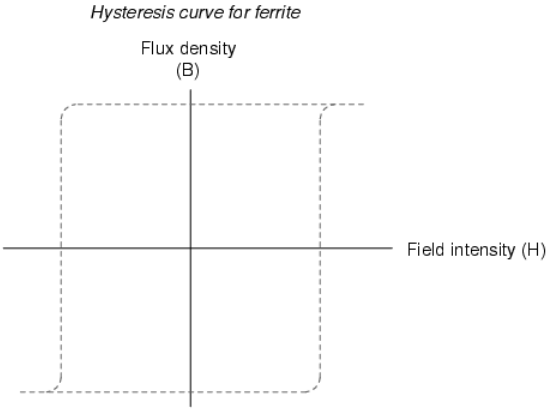

Review

- The permeability of a material changes with the amount of magnetic flux forced through it.
- The specific relationship of force to flux (field intensity H to flux density B) is graphed in a form called the *normal magnetization curve*.
- It is possible to apply so much magnetic field force to a ferromagnetic material that no more flux can be crammed into it. This condition is known as magnetic *saturation*.
- When the *retentivity* of a ferromagnetic substance interferes with its re-magnetization in the opposite direction, a condition known as *hysteresis* occurs.

This page titled 14.4: Permeability and Saturation is shared under a GNU Free Documentation License 1.3 license and was authored, remixed, and/or curated by Tony R. Kuphaldt (All About Circuits) via source content that was edited to the style and standards of the LibreTexts platform.

14.5: Electromagnetic Induction

An easy way to create a magnetic field of changing intensity is to move a permanent magnet next to a wire or coil of wire. Remember: the magnetic field must increase or decrease in intensity *perpendicular* to the wire (so that the lines of flux "cut across" the conductor), or else no voltage will be induced:

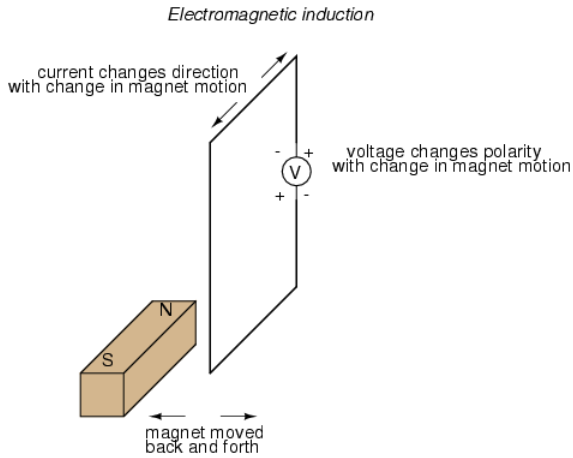

Faraday was able to mathematically relate the rate of change of the magnetic field flux with induced voltage (note the use of a lower-case letter "e" for voltage. This refers to *instantaneous* voltage, or voltage at a specific point in time, rather than a steady, stable voltage.):

$$e = N\frac{d\Phi}{dt}$$

Where,

$e =$ (Instantaneous) induced voltage in volts
$N =$ Number of turns in wire coil (straight wire = 1)
$\Phi =$ Magnetic flux in Webers
$t =$ Time in seconds

The "d" terms are standard calculus notation, representing rate-of-change of flux over time. "N" stands for the number of turns, or wraps, in the wire coil (assuming that the wire is formed in the shape of a coil for maximum electromagnetic efficiency).

This phenomenon is put into obvious practical use in the construction of electrical generators, which use mechanical power to move a magnetic field past coils of wire to generate voltage. However, this is by no means the only practical use for this principle.

If we recall that the magnetic field produced by a current-carrying wire was always perpendicular to that wire, and that the flux intensity of that magnetic field varied with the amount of current through it, we can see that a wire is capable of inducing a voltage *along its own length* simply due to a change in current through it. This effect is called *self-induction:* a changing magnetic field produced by changes in current through a wire inducing voltage along the length of that same wire. If the magnetic field flux is enhanced by bending the wire into the shape of a coil, and/or wrapping that coil around a material of high permeability, this effect of self-induced voltage will be more intense. A device constructed to take advantage of this effect is called an *inductor*, and will be discussed in greater detail in the next chapter.

Review

- A magnetic field of changing intensity perpendicular to a wire will induce a voltage along the length of that wire. The amount of voltage induced depends on the rate of change of the magnetic field flux and the number of turns of wire (if coiled) exposed to the change in flux.
- Faraday's equation for induced voltage: $e = N(d\Phi/dt)$
- A current-carrying wire will experience an induced voltage along its length if the current changes (thus changing the magnetic field flux perpendicular to the wire, thus inducing voltage according to Faraday's formula). A device built specifically to take advantage of this effect is called an *inductor*.

This page titled 14.5: Electromagnetic Induction is shared under a GNU Free Documentation License 1.3 license and was authored, remixed, and/or curated by Tony R. Kuphaldt (All About Circuits) via source content that was edited to the style and standards of the LibreTexts platform.

14.6: Mutual Inductance

A device specifically designed to produce the effect of mutual inductance between two or more coils is called a *transformer*.

The device shown in the above photograph is a kind of transformer, with two concentric wire coils. It is actually intended as a precision standard unit for mutual inductance, but for the purposes of illustrating what the essence of a transformer is, it will suffice. The two wire coils can be distinguished from each other by color: the bulk of the tube's length is wrapped in green-insulated wire (the first coil) while the second coil (wire with bronze-colored insulation) stands in the middle of the tube's length. The wire ends run down to connection terminals at the bottom of the unit. Most transformer units are not built with their wire coils exposed like this.

Because magnetically-induced voltage only happens when the magnetic field flux is *changing* in strength relative to the wire, mutual inductance between two coils can only happen with alternating (changing—AC) voltage, and not with direct (steady—DC) voltage. The only applications for mutual inductance in a DC system is where some means is available to switch power on and off to the coil (thus creating a *pulsing* DC voltage), the induced voltage peaking at every pulse.

A very useful property of transformers is the ability to transform voltage and current levels according to a simple ratio, determined by the ratio of input and output coil turns. If the energized coil of a transformer is energized by an AC voltage, the amount of AC voltage induced in the unpowered coil will be equal to the input voltage multiplied by the ratio of output to input wire turns in the coils. Conversely, the current through the windings of the output coil compared to the input coil will follow the opposite ratio: if the voltage is increased from input coil to output coil, the current will be decreased by the same proportion. This action of the transformer is analogous to that of mechanical gear, belt sheave, or chain sprocket ratios:

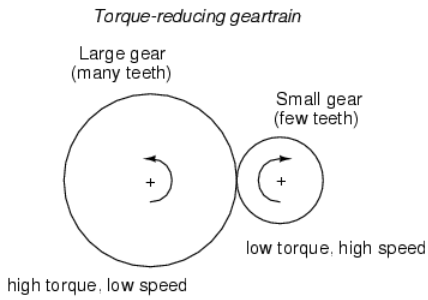

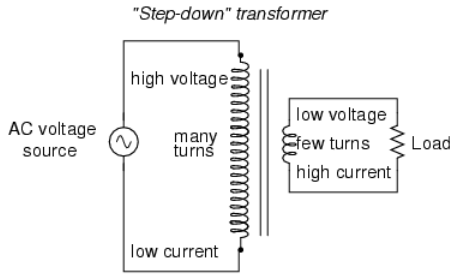

A transformer designed to output more voltage than it takes in across the input coil is called a “step-up” transformer, while one designed to do the opposite is called a “step-down,” in reference to the transformation of voltage that takes place. The current through each respective coil, of course, follows the exact opposite proportion.

Review

- Mutual inductance is where the magnetic field generated by a coil of wire induces voltage in an adjacent coil of wire.
- A *transformer* is a device constructed of two or more coils in close proximity to each other, with the express purpose of creating a condition of mutual inductance between the coils.
- Transformers only work with *changing* voltages, not steady voltages. Thus, they may be classified as an AC device and not a DC device.

This page titled 14.6: Mutual Inductance is shared under a GNU Free Documentation License 1.3 license and was authored, remixed, and/or curated by Tony R. Kuphaldt (All About Circuits) via source content that was edited to the style and standards of the LibreTexts platform.

CHAPTER OVERVIEW

15: Inductors

15.1: Magnetic Fields and Inductance
15.2: Inductors and Calculus
15.3: Factors Affecting Inductance
15.4: Series and Parallel Inductors
15.5: Practical Considerations - Inductors

This page titled 15: Inductors is shared under a GNU Free Documentation License 1.3 license and was authored, remixed, and/or curated by Tony R. Kuphaldt (All About Circuits) via source content that was edited to the style and standards of the LibreTexts platform.

15.1: Magnetic Fields and Inductance

Field Force and Field Flux

Fields have two measures: a field *force* and a field *flux*. The field *force* is the amount of "push" that a field exerts over a certain distance. The field *flux* is the total quantity, or effect, of the field through space. Field force and flux are roughly analogous to voltage ("push") and current (flow) through a conductor, respectively, although field flux can exist in totally empty space (without the motion of particles such as electrons) whereas current can only take place where there are free electrons to move. Field flux can be opposed in space, just as the flow of electrons can be opposed by resistance. The amount of field flux that will develop in space is proportional to the amount of field force applied, divided by the amount of opposition to flux. Just as the type of conducting material dictates that conductor's specific resistance to electric current, the type of material occupying the space through which a magnetic field force is impressed dictates the specific opposition to magnetic field flux.

Whereas an electric field flux between two conductors allows for an accumulation of free electron charge within those conductors, a magnetic field flux allows for a certain "inertia" to accumulate in the flow of electrons through the conductor producing the field.

Stronger Magnetic Fields With Inductors

Inductors are components designed to take advantage of this phenomenon by shaping the length of conductive wire in the form of a coil. This shape creates a stronger magnetic field than what would be produced by a straight wire. Some inductors are formed with wire wound in a self-supporting coil. Others wrap the wire around a solid core material of some type. Sometimes the core of an inductor will be straight, and other times it will be joined in a loop (square, rectangular, or circular) to fully contain the magnetic flux. These design options all have an effect on the performance and characteristics of inductors.

The schematic symbol for an inductor, like the capacitor, is quite simple, being little more than a coil symbol representing the coiled wire. Although a simple coil shape is the generic symbol for any inductor, inductors with cores are sometimes distinguished by the addition of parallel lines to the axis of the coil. A newer version of the inductor symbol dispenses with the coil shape in favor of several "humps" in a row:

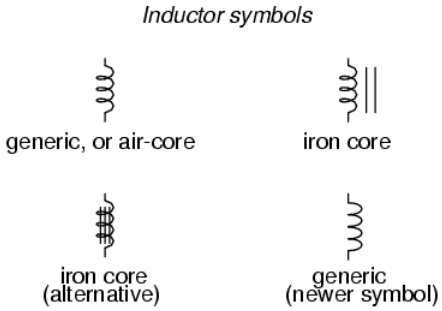

As the electric current produces a concentrated magnetic field around the coil, this field flux equates to a storage of energy representing the kinetic motion of the electrons through the coil. The more current in the coil, the stronger the magnetic field will be, and the more energy the inductor will store.

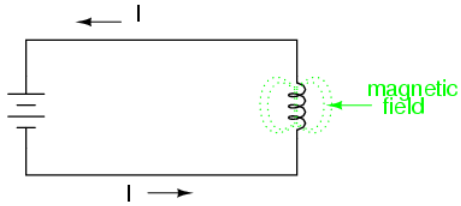

Because inductors store the kinetic energy of moving electrons in the form of a magnetic field, they behave quite differently than resistors (which simply dissipate energy in the form of heat) in a circuit. Energy storage in an inductor is a function of the amount of current through it. An inductor's ability to store energy as a function of current results in a tendency to try to maintain current at a constant level. In other words, inductors tend to resist *changes* in current. When current through an inductor is increased or decreased, the inductor "resists" the *change* by producing a voltage between its leads in opposing polarity to the *change*.

To store more energy in an inductor, the current through it must be increased. This means that its magnetic field must increase in strength, and that change in field strength produces the corresponding voltage according to the principle of electromagnetic self-induction. Conversely, to release energy from an inductor, the current through it must be decreased. This means that the inductor's magnetic field must decrease in strength, and that change in field strength self-induces a voltage drop of just the opposite polarity.

Just as Isaac Newton's first Law of Motion ("an object in motion tends to stay in motion; an object at rest tends to stay at rest") describes the tendency of a mass to oppose changes in velocity, we can state an inductor's tendency to oppose changes in current as such: "Electrons moving through an inductor tend to stay in motion; electrons at rest in an inductor tend to stay at rest." Hypothetically, an inductor left short-circuited will maintain a constant rate of current through it with no external assistance:

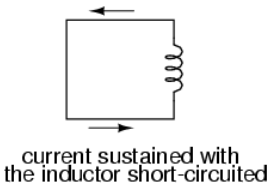

Practically speaking, however, the ability for an inductor to self-sustain current is realized only with superconductive wire, as the wire resistance in any normal inductor is enough to cause current to decay very quickly with no external source of power.

When the current through an inductor is increased, it drops a voltage opposing the direction of electron flow, acting as a power load. In this condition, the inductor is said to be *charging*, because there is an increasing amount of energy being stored in its magnetic field. Note the polarity of the voltage with regard to the direction of current:

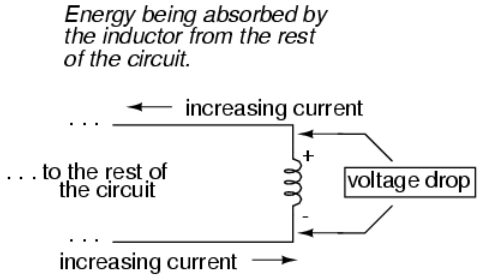

The inductor acts as a LOAD

Conversely, when the current through the inductor is decreased, it drops a voltage aiding the direction of electron flow, acting as a power source. In this condition, the inductor is said to be *discharging*, because its store of energy is decreasing as it releases energy from its magnetic field to the rest of the circuit. Note the polarity of the voltage with regard to the direction of current.

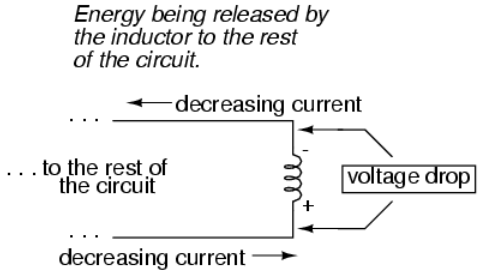

The inductor acts as a SOURCE

If a source of electric power is suddenly applied to an unmagnetized inductor, the inductor will initially resist the flow of electrons by dropping the full voltage of the source. As current begins to increase, a stronger and stronger magnetic field will be created, absorbing energy from the source. Eventually the current reaches a maximum level, and stops increasing. At this point, the inductor stops absorbing energy from the source, and is dropping minimum voltage across its leads, while the current remains at a maximum level. As an inductor stores more energy, its current level increases, while its voltage drop decreases. Note that this is precisely the opposite of capacitor behavior, where the storage of energy results in an increased voltage across the component! Whereas

capacitors store their energy charge by maintaining a static voltage, inductors maintain their energy "charge" by maintaining a steady current through the coil.

The type of material the wire is coiled around greatly impacts the strength of the magnetic field flux (and therefore the amount of stored energy) generated for any given amount of current through the coil. Coil cores made of ferromagnetic materials (such as soft iron) will encourage stronger field fluxes to develop with a given field force than nonmagnetic substances such as aluminum or air.

What is Inductance?

The measure of an inductor's ability to store energy for a given amount of current flow is called *inductance*. Not surprisingly, inductance is also a measure of the intensity of opposition to changes in current (exactly how much self-induced voltage will be produced for a given rate of change of current). Inductance is symbolically denoted with a capital "L," and is measured in the unit of the Henry, abbreviated as "H."

Choke Vs. Inductor

An obsolete name for an inductor is *choke*, so called for its common usage to block ("choke") high-frequency AC signals in radio circuits. Another name for an inductor, still used in modern times, is *reactor*, especially when used in large power applications. Both of these names will make more sense after you've studied alternating current (AC) circuit theory, and especially a principle known as *inductive reactance*.

Review

- Inductors react against changes in current by dropping voltage in the polarity necessary to oppose the change.
- When an inductor is faced with an increasing current, it acts as a load: dropping voltage as it absorbs energy (negative on the current entry side and positive on the current exit side, like a resistor).
- When an inductor is faced with a decreasing current, it acts as a source: creating voltage as it releases stored energy (positive on the current entry side and negative on the current exit side, like a battery).
- The ability of an inductor to store energy in the form of a magnetic field (and consequently to oppose changes in current) is called *inductance*. It is measured in the unit of the *Henry* (H).
- Inductors used to be commonly known by another term: *choke*. In large power applications, they are sometimes referred to as *reactors*.

This page titled 15.1: Magnetic Fields and Inductance is shared under a GNU Free Documentation License 1.3 license and was authored, remixed, and/or curated by Tony R. Kuphaldt (All About Circuits) via source content that was edited to the style and standards of the LibreTexts platform.

15.2: Inductors and Calculus

Inductors do not have a stable "resistance" as conductors do. However, there is a definite mathematical relationship between voltage and current for an inductor, as follows:

"Ohm's Law" for an inductor

$$v = L\frac{di}{dt}$$

Where,

v = Instantaneous voltage across the inductor

L = Inductance in Henrys

$\frac{di}{dt}$ = Instantaneous rate of current change (amps per second)

You should recognize the form of this equation from the capacitor chapter. It relates one variable (in this case, inductor voltage drop) to a *rate of change* of another variable (in this case, inductor current). Both voltage (v) and rate of current change (di/dt) are *instantaneous*: that is, in relation to a specific point in time, thus the lower-case letters "v" and "i". As with the capacitor formula, it is convention to express instantaneous voltage as *v* rather than *e*, but using the latter designation would not be wrong. Current rate-of-change (di/dt) is expressed in units of amps per second, a positive number representing an increase and a negative number representing a decrease.

Like a capacitor, an inductor's behavior is rooted in the variable of time. Aside from any resistance intrinsic to an inductor's wire coil (which we will assume is zero for the sake of this section), the voltage dropped across the terminals of an inductor is purely related to how quickly its current changes over time.

Suppose we were to connect a perfect inductor (one having zero ohms of wire resistance) to a circuit where we could vary the amount of current through it with a potentiometer connected as a variable resistor:

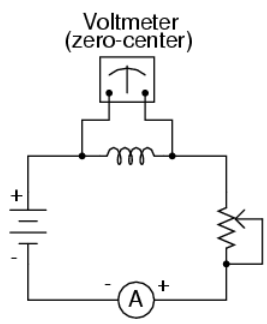

If the potentiometer mechanism remains in a single position (wiper is stationary), the series-connected ammeter will register a constant (unchanging) current, and the voltmeter connected across the inductor will register 0 volts. In this scenario, the instantaneous rate of current change (di/dt) is equal to zero, because the current is stable. The equation tells us that with 0 amps per second change for a di/dt, there must be zero instantaneous voltage (v) across the inductor. From a physical perspective, with no current change, there will be a steady magnetic field generated by the inductor. With no change in magnetic flux ($d\Phi/dt = 0$ Webers per second), there will be no voltage dropped across the length of the coil due to induction.

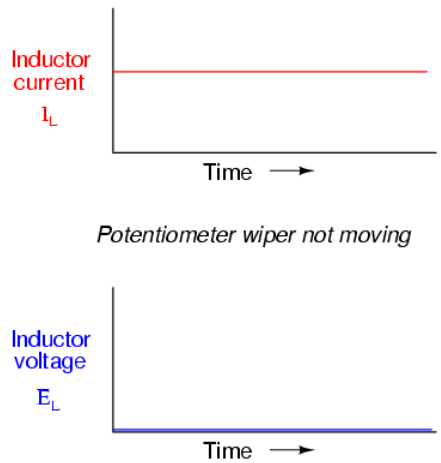

If we move the potentiometer wiper slowly in the “up” direction, its resistance from end to end will slowly decrease. This has the effect of increasing current in the circuit, so the ammeter indication should be increasing at a slow rate:

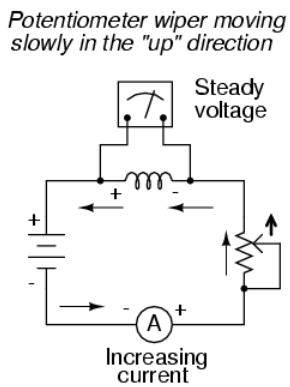

Assuming that the potentiometer wiper is being moved such that the *rate* of current increase through the inductor is steady, the di/dt term of the formula will be a fixed value. This fixed value, multiplied by the inductor’s inductance in Henrys (also fixed), results in a fixed voltage of some magnitude. From a physical perspective, the gradual increase in current results in a magnetic field that is likewise increasing. This gradual increase in magnetic flux causes a voltage to be induced in the coil as expressed by Michael Faraday’s induction equation $e = N(d\Phi/dt)$. This self-induced voltage across the coil, as a result of a gradual change in current magnitude through the coil, happens to be of a polarity that attempts to oppose the change in current. In other words, the induced voltage polarity resulting from an *increase* in current will be oriented in such a way as to push *against* the direction of current, to try to keep the current at its former magnitude. This phenomenon exhibits a more general principle of physics known as *Lenz’s Law*, which states that an induced effect will always be opposed to the cause producing it.

In this scenario, the inductor will be acting as a *load*, with the negative side of the induced voltage on the end where electrons are entering, and the positive side of the induced voltage on the end where electrons are exiting.

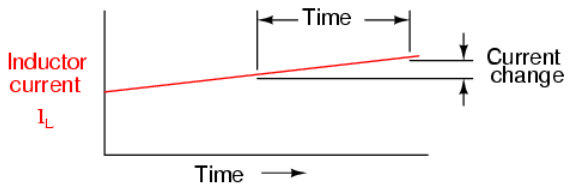

Potentiometer wiper moving slowly "up"

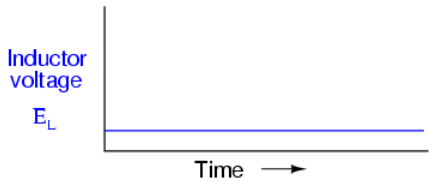

Changing the rate of current increase through the inductor by moving the potentiometer wiper "up" at different speeds results in different amounts of voltage being dropped across the inductor, all with the same polarity (opposing the increase in current):

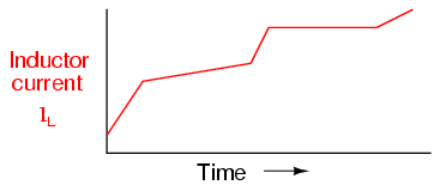

Potentiometer wiper moving "up" at different rates

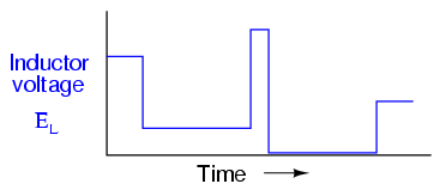

Here again we see the *derivative* function of calculus exhibited in the behavior of an inductor. In calculus terms, we would say that the induced voltage across the inductor is the derivative of the current through the inductor: that is, proportional to the current's rate-of-change with respect to time.

Reversing the direction of wiper motion on the potentiometer (going "down" rather than "up") will result in its end-to-end resistance increasing. This will result in circuit current decreasing (a *negative* figure for di/dt). The inductor, always opposing any change in current, will produce a voltage drop opposed to the direction of change:

Potentiometer wiper moving in the "down" direction

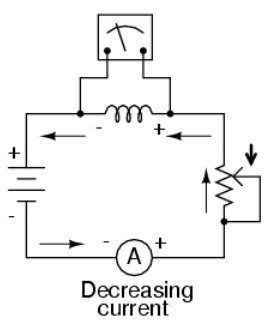

How much voltage the inductor will produce depends, of course, on how rapidly the current through it is decreased. As described by Lenz's Law, the induced voltage will be opposed to the change in current. With a *decreasing* current, the voltage polarity will be

oriented so as to try to keep the current at its former magnitude. In this scenario, the inductor will be acting as a *source*, with the negative side of the induced voltage on the end where electrons are exiting, and the positive side of the induced voltage on the end where electrons are entering. The more rapidly current is decreased, the more voltage will be produced by the inductor, in its release of stored energy to try to keep current constant.

Again, the amount of voltage across a perfect inductor is directly proportional to the rate of current change through it. The only difference between the effects of a *decreasing* current and an *increasing* current is the *polarity* of the induced voltage. For the same rate of current change over time, either increasing or decreasing, the voltage magnitude (volts) will be the same. For example, a di/dt of -2 amps per second will produce the same amount of induced voltage drop across an inductor as a di/dt of +2 amps per second, just in the opposite polarity.

If current through an inductor is forced to change very rapidly, very high voltages will be produced. Consider the following circuit:

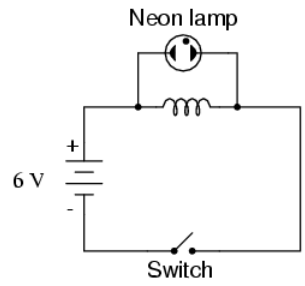

In this circuit, a lamp is connected across the terminals of an inductor. A switch is used to control current in the circuit, and power is supplied by a 6 volt battery. When the switch is closed, the inductor will briefly oppose the change in current from zero to some magnitude, but will drop only a small amount of voltage. It takes about 70 volts to ionize the neon gas inside a neon bulb like this, so the bulb cannot be lit on the 6 volts produced by the battery, or the low voltage momentarily dropped by the inductor when the switch is closed:

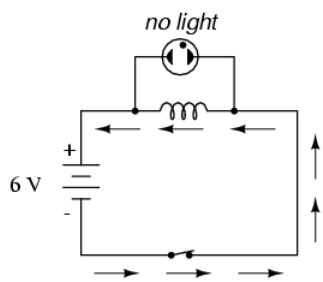

When the switch is opened, however, it suddenly introduces an extremely high resistance into the circuit (the resistance of the air gap between the contacts). This sudden introduction of high resistance into the circuit causes the circuit current to decrease almost instantly. Mathematically, the di/dt term will be a very large negative number. Such a rapid change of current (from some magnitude to zero in very little time) will induce a very high voltage across the inductor, oriented with negative on the left and positive on the right, in an effort to oppose this decrease in current. The voltage produced is usually more than enough to light the neon lamp, if only for a brief moment until the current decays to zero:

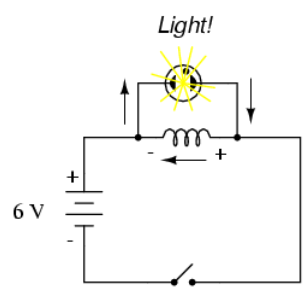

For maximum effect, the inductor should be sized as large as possible (at least 1 Henry of inductance).

This page titled 15.2: Inductors and Calculus is shared under a GNU Free Documentation License 1.3 license and was authored, remixed, and/or curated by Tony R. Kuphaldt (All About Circuits) via source content that was edited to the style and standards of the LibreTexts platform.

15.3: Factors Affecting Inductance

NUMBER OF WIRE WRAPS, OR "TURNS" IN THE COIL: All other factors being equal, a greater number of turns of wire in the coil results in greater inductance; fewer turns of wire in the coil results in less inductance.

Explanation: More turns of wire means that the coil will generate a greater amount of magnetic field force (measured in amp-turns!), for a given amount of coil current.

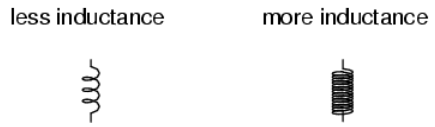

COIL AREA: All other factors being equal, greater coil area (as measured looking lengthwise through the coil, at the cross-section of the core) results in greater inductance; less coil area results in less inductance.

Explanation: Greater coil area presents less opposition to the formation of magnetic field flux, for a given amount of field force (amp-turns).

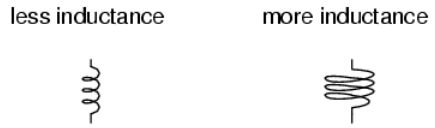

COIL LENGTH: All other factors being equal, the longer the coil's length, the less inductance; the shorter the coil's length, the greater the inductance.

Explanation: A longer path for the magnetic field flux to take results in more opposition to the formation of that flux for any given amount of field force (amp-turns).

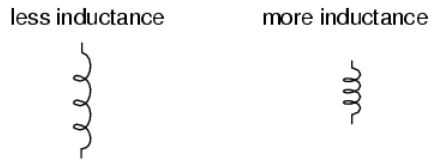

CORE MATERIAL: All other factors being equal, the greater the magnetic permeability of the core which the coil is wrapped around, the greater the inductance; the less the permeability of the core, the less the inductance.

Explanation: A core material with greater magnetic permeability results in greater magnetic field flux for any given amount of field force (amp-turns).

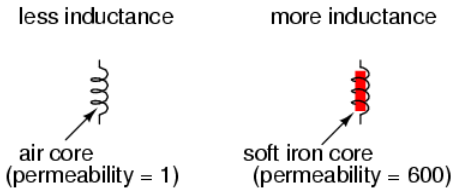

An approximation of inductance for any coil of wire can be found with this formula:

$$L = \frac{N^2 \mu A}{l}$$

$$\mu = \mu_r \mu_0$$

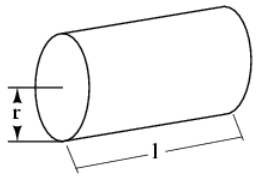

Where,

L = Inductance of coil in Henrys

N = Number of turns in wire coil (straight wire = 1)

μ = Permeability of core material (absolute, not relative)

μ_r = Relative permeability, dimensionless (μ_0=1 for air)

μ_0 = 1.26×10^{-6} T-m/At permeability of free space

A = Area of coil in square meters = πr^2

l = Average length of coil in meters

It must be understood that this formula yields *approximate* figures only. One reason for this is the fact that permeability changes as the field intensity varies (remember the nonlinear "B/H" curves for different materials). Obviously, if permeability (μ) in the equation is unstable, then the inductance (L) will also be unstable to some degree as the current through the coil changes in magnitude. If the hysteresis of the core material is significant, this will also have strange effects on the inductance of the coil. Inductor designers try to minimize these effects by designing the core in such a way that its flux density never approaches saturation levels, and so the inductor operates in a more linear portion of the B/H curve.

If an inductor is designed so that any one of these factors may be varied at will, its inductance will correspondingly vary. Variable inductors are usually made by providing a way to vary the number of wire turns in use at any given time, or by varying the core material (a sliding core that can be moved in and out of the coil). An example of the former design is shown in this photograph:

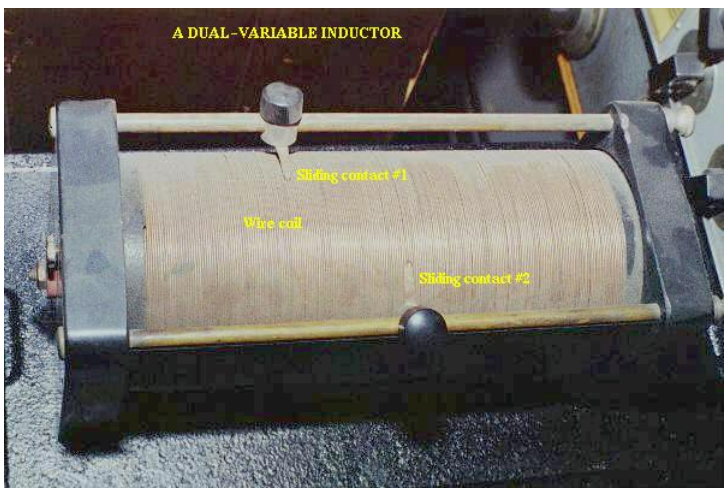

This unit uses sliding copper contacts to tap into the coil at different points along its length. The unit shown happens to be an air-core inductor used in early radio work.

A fixed-value inductor is shown in the next photograph, another antique air-core unit built for radios. The connection terminals can be seen at the bottom, as well as the few turns of relatively thick wire:

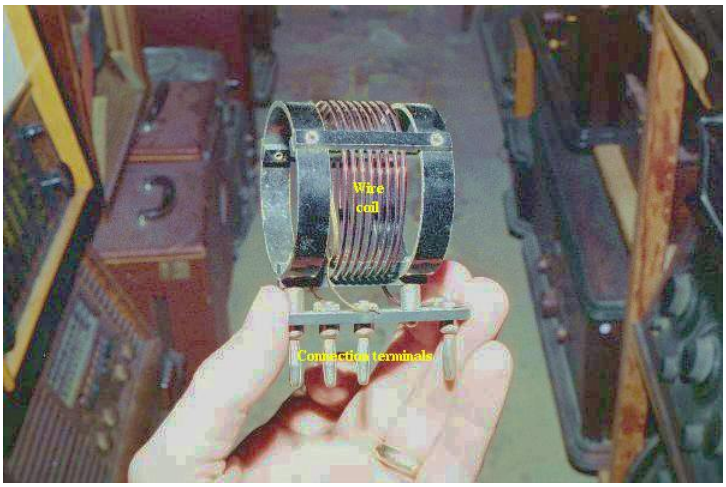

Here is another inductor (of greater inductance value), also intended for radio applications. Its wire coil is wound around a white ceramic tube for greater rigidity:

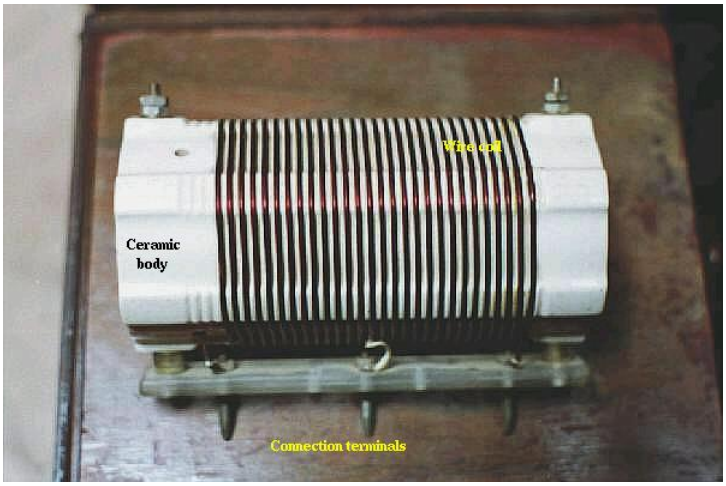

Inductors can also be made very small for printed circuit board applications. Closely examine the following photograph and see if you can identify two inductors near each other:

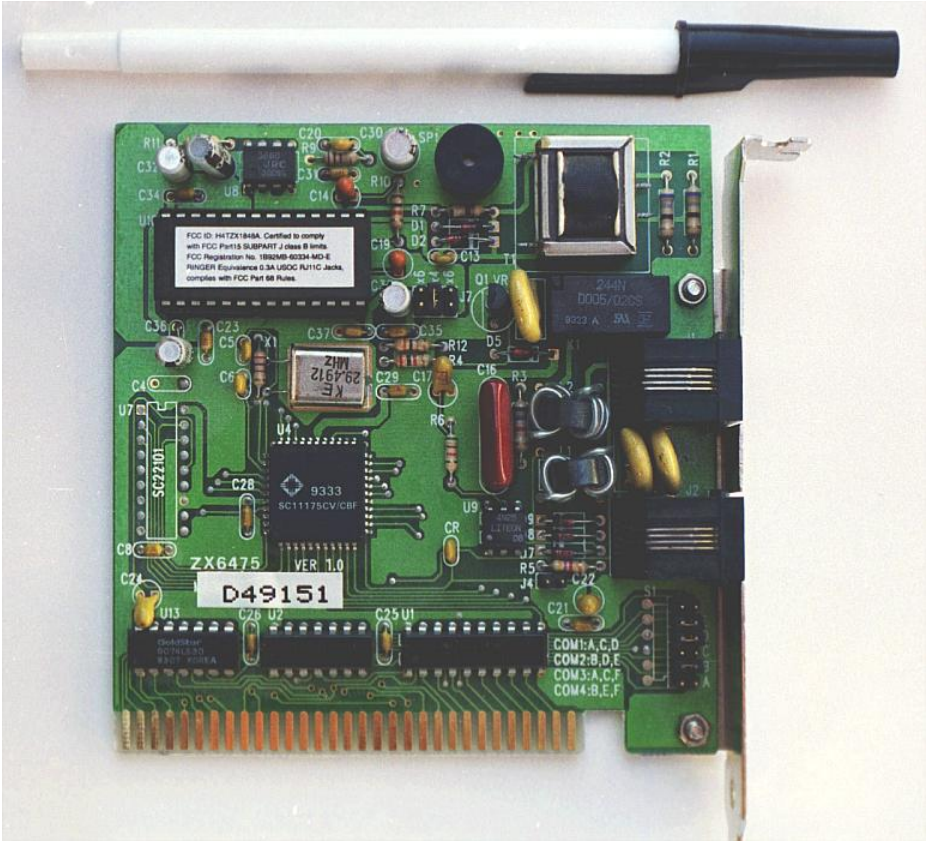

The two inductors on this circuit board are labeled L_1 and L_2, and they are located to the right-center of the board. Two nearby components are R_3 (a resistor) and C_{16} (a capacitor). These inductors are called "toroidal" because their wire coils are wound around donut-shaped ("torus") cores.

Like resistors and capacitors, inductors can be packaged as "surface mount devices" as well. The following photograph shows just how small an inductor can be when packaged as such:

A pair of inductors can be seen on this circuit board, to the right and center, appearing as small black chips with the number “100” printed on both. The upper inductor’s label can be seen printed on the green circuit board as L_5. Of course these inductors are very small in inductance value, but it demonstrates just how tiny they can be manufactured to meet certain circuit design needs.

This page titled 15.3: Factors Affecting Inductance is shared under a GNU Free Documentation License 1.3 license and was authored, remixed, and/or curated by Tony R. Kuphaldt (All About Circuits) via source content that was edited to the style and standards of the LibreTexts platform.

15.4: Series and Parallel Inductors

When inductors are connected in series, the total inductance is the sum of the individual inductors' inductances. To understand why this is so, consider the following: the definitive measure of inductance is the amount of voltage dropped across an inductor for a given rate of current change through it. If inductors are connected together in series (thus sharing the same current, and seeing the same rate of change in current), then the total voltage dropped as the result of a change in current will be additive with each inductor, creating a greater total voltage than either of the individual inductors alone. Greater voltage for the same rate of change in current means greater inductance.

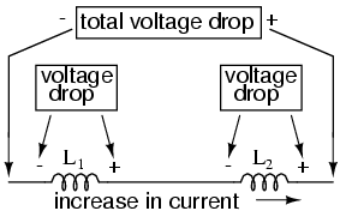

Thus, the total inductance for series inductors is more than any one of the individual inductors' inductances. The formula for calculating the series total inductance is the same form as for calculating series resistances:

$$\underbrace{L_{total} = L_1 + L_2 + \cdots + L_m}_{\text{Series Inductaces}} \tag{15.4.1}$$

When inductors are connected in parallel, the total inductance is less than any one of the parallel inductors' inductances. Again, remember that the definitive measure of inductance is the amount of voltage dropped across an inductor for a given rate of current change through it. Since the current through each parallel inductor will be a fraction of the total current, and the voltage across each parallel inductor will be equal, a change in total current will result in less voltage dropped across the parallel array than for any one of the inductors considered separately. In other words, there will be less voltage dropped across parallel inductors for a given rate of change in current than for any of those inductors considered separately, because total current divides among parallel branches. Less voltage for the same rate of change in current means less inductance.

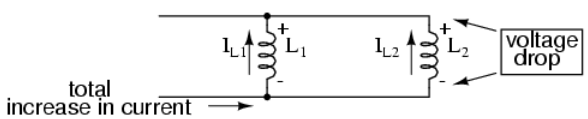

Thus, the total inductance is less than any one of the individual inductors' inductances. The formula for calculating the parallel total inductance is the same form as for calculating parallel resistances:

Parallel Inductances

$$L_{total} = \frac{1}{\frac{1}{L_1} + \frac{1}{L_2} + \ldots \frac{1}{L_n}}$$

Review

- Inductances add in series.
- Inductances diminish in parallel.

This page titled 15.4: Series and Parallel Inductors is shared under a GNU Free Documentation License 1.3 license and was authored, remixed, and/or curated by Tony R. Kuphaldt (All About Circuits) via source content that was edited to the style and standards of the LibreTexts platform.

15.5: Practical Considerations - Inductors

Rated current: Since inductors are constructed of coiled wire, and any wire will be limited in its current-carrying capacity by its resistance and ability to dissipate heat, you must pay attention to the maximum current allowed through an inductor.

Equivalent circuit: Since inductor wire has some resistance, and circuit design constraints typically demand the inductor be built to the smallest possible dimensions, there is no such thing as a “perfect” inductor. Inductor coil wire usually presents a substantial amount of series resistance, and the close spacing of wire from one coil turn to another (separated by insulation) may present measurable amounts of stray capacitance to interact with its purely inductive characteristics. Unlike capacitors, which are relatively easy to manufacture with negligible stray effects, inductors are difficult to find in “pure” form. In certain applications, these undesirable characteristics may present significant engineering problems.

Inductor size: Inductors tend to be much larger, physically, than capacitors are for storing equivalent amounts of energy. This is especially true considering the recent advances in electrolytic capacitor technology, allowing incredibly large capacitance values to be packed into a small package. If a circuit designer needs to store a large amount of energy in a small volume and has the freedom to choose either capacitors or inductors for the task, he or she will most likely choose a capacitor. A notable exception to this rule is in applications requiring *huge* amounts of either capacitance or inductance to store electrical energy: inductors made of superconducting wire (zero resistance) are more practical to build and safely operate than capacitors of equivalent value, and are probably smaller too.

Interference: Inductors may affect nearby components on a circuit board with their magnetic fields, which can extend significant distances beyond the inductor. This is especially true if there are other inductors nearby on the circuit board. If the magnetic fields of two or more inductors are able to “link” with each others’ turns of wire, there will be mutual inductance present in the circuit as well as self-inductance, which could very well cause unwanted effects. This is another reason why circuit designers tend to choose capacitors over inductors to perform similar tasks: capacitors inherently contain their respective electric fields neatly within the component package and therefore do not typically generate any “mutual” effects with other components.

This page titled 15.5: Practical Considerations - Inductors is shared under a GNU Free Documentation License 1.3 license and was authored, remixed, and/or curated by Tony R. Kuphaldt (All About Circuits) via source content that was edited to the style and standards of the LibreTexts platform.

16: RC and L

This page was auto-generated because a user created a sub-page to this page.

16: RC and L is shared under a not declared license and was authored, remixed, and/or curated by LibreTexts.

CHAPTER OVERVIEW

16: RC and L/R Time Constants

This chapter explores the response of capacitors and inductors to sudden changes in DC voltage (called a *transient* voltage), when wired in series with a resistor. Unlike resistors, which respond instantaneously to applied voltage, capacitors and inductors react over time as they absorb and release energy.

16.1: Electrical Transients

16.2: Capacitor Transient Response

16.3: Inductor Transient Response

16.4: Voltage and Current Calculations

16.05: Why L

16.5: Why L/R and not LR?

16.6: Complex Voltage and Current Calculations

16.7: Complex Circuits

16.8: Solving for Unknown Time

This page titled 16: RC and L/R Time Constants is shared under a GNU Free Documentation License 1.3 license and was authored, remixed, and/or curated by Tony R. Kuphaldt (All About Circuits) via source content that was edited to the style and standards of the LibreTexts platform.

16.1: Electrical Transients

This chapter explores the response of capacitors and inductors to sudden changes in DC voltage (called a *transient* voltage), when wired in series with a resistor. Unlike resistors, which respond instantaneously to applied voltage, capacitors and inductors react over time as they absorb and release energy.

This page titled 16.1: Electrical Transients is shared under a GNU Free Documentation License 1.3 license and was authored, remixed, and/or curated by Tony R. Kuphaldt (All About Circuits) via source content that was edited to the style and standards of the LibreTexts platform.

16.2: Capacitor Transient Response

Because capacitors store energy in the form of an electric field, they tend to act like small secondary-cell batteries, being able to store and release electrical energy. A fully discharged capacitor maintains zero volts across its terminals, and a charged capacitor maintains a steady quantity of voltage across its terminals, just like a battery. When capacitors are placed in a circuit with other sources of voltage, they will absorb energy from those sources, just as a secondary-cell battery will become charged as a result of being connected to a generator. A fully discharged capacitor, having a terminal voltage of zero, will initially act as a short-circuit when attached to a source of voltage, drawing maximum current as it begins to build a charge. Over time, the capacitor's terminal voltage rises to meet the applied voltage from the source, and the current through the capacitor decreases correspondingly. Once the capacitor has reached the full voltage of the source, it will stop drawing current from it, and behave essentially as an open-circuit.

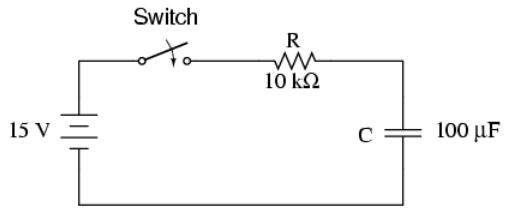

When the switch is first closed, the voltage across the capacitor (which we were told was fully discharged) is zero volts; thus, it first behaves as though it were a short-circuit. Over time, the capacitor voltage will rise to equal battery voltage, ending in a condition where the capacitor behaves as an open-circuit. Current through the circuit is determined by the difference in voltage between the battery and the capacitor, divided by the resistance of 10 kΩ. As the capacitor voltage approaches the battery voltage, the current approaches zero. Once the capacitor voltage has reached 15 volts, the current will be exactly zero. Let's see how this works using real values:

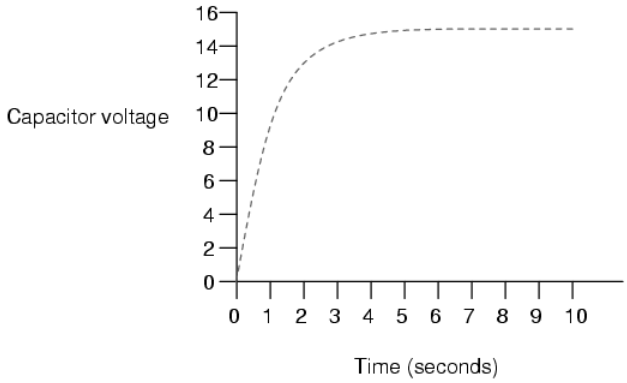

Time (seconds)	Battery voltage	Capacitor voltage	Current
0	15 V	0 V	1500 uA
0.5	15 V	5.902 V	909.8 uA
1	15 V	9.482 V	551.8 uA
2	15 V	12.970 V	203.0 uA
3	15 V	14.253 V	74.68 uA
4	15 V	14.725 V	27.47 uA
5	15 V	14.899 V	10.11 uA
6	15 V	14.963 V	3.718 uA
10	15 V	14.999 V	0.068 uA

The capacitor voltage's approach to 15 volts and the current's approach to zero over time is what a mathematician would call *asymptotic:* that is, they both approach their final values, getting closer and closer over time, but never exactly reaches their destinations. For all practical purposes, though, we can say that the capacitor voltage will eventually reach 15 volts and that the current will eventually equal zero.

Using the SPICE circuit analysis program, we can chart this asymptotic buildup of capacitor voltage and decay of capacitor current in a more graphical form (capacitor current is plotted in terms of voltage drop across the resistor, using the resistor as a shunt to measure current):

```
capacitor charging
v1 1 0 dc 15
r1 1 2 10k
c1 2 0 100u ic=0
.tran .5 10 uic
.plot tran v(2,0) v(1,2)
.end
legend:

*: v(2)   Capacitor voltage
+: v(1,2) Capacitor current

time             v(2)

(*+)----------  0.000E+00     5.000E+00     1.000E+01     1.500E+01
- - - - - - - - - - - - - - - - - - - - - - - - - - - - - - - - - - - -
0.000E+00  5.976E-05 *            .             .             +
5.000E-01  5.881E+00 .            . *         + .             .
1.000E+00  9.474E+00 .            .+            *.            .
1.500E+00  1.166E+01 .        +   .             .    *        .
2.000E+00  1.297E+01 .     +      .             .       +     .
2.500E+00  1.377E+01 .  +         .             .          *  .
3.000E+00  1.426E+01 . +          .             .           * .
3.500E+00  1.455E+01 .+           .             .            *.
4.000E+00  1.473E+01 .+           .             .            *.
4.500E+00  1.484E+01 +            .             .             *
5.000E+00  1.490E+01 +            .             .             *
5.500E+00  1.494E+01 +            .             .             *
6.000E+00  1.496E+01 +            .             .             *
6.500E+00  1.498E+01 +            .             .             *
7.000E+00  1.499E+01 +            .             .             *
7.500E+00  1.499E+01 +            .             .             *
8.000E+00  1.500E+01 +            .             .             *
8.500E+00  1.500E+01 +            .             .             *
9.000E+00  1.500E+01 +            .             .             *
9.500E+00  1.500E+01 +            .             .             *
1.000E+01  1.500E+01 +            .             .             *
- - - - - - - - - - - - - - - - - - - - - - - - - - - - - - - - - - - -
```

As you can see, I have used the `.plot` command in the netlist instead of the more familiar `.print` command. This generates a pseudo-graphic plot of figures on the computer screen using text characters. SPICE plots graphs in such a way that time is on the vertical axis (going down) and amplitude (voltage/current) is plotted on the horizontal (right=more; left=less). Notice how the voltage increases (to the right of the plot) very quickly at first, then tapering off as time goes on. Current also changes very quickly at first then levels off as time goes on, but it is approaching minimum (left of scale) while voltage approaches maximum.

Review

- Capacitors act somewhat like secondary-cell batteries when faced with a sudden change in applied voltage: they initially react by producing a high current which tapers off over time.
- A fully discharged capacitor initially acts as a short circuit (current with no voltage drop) when faced with the sudden application of voltage. After charging fully to that level of voltage, it acts as an open circuit (voltage drop with no current).
- In a resistor-capacitor charging circuit, capacitor voltage goes from nothing to full source voltage while current goes from maximum to zero, both variables changing most rapidly at first, approaching their final values slower and slower as time goes on.

This page titled 16.2: Capacitor Transient Response is shared under a GNU Free Documentation License 1.3 license and was authored, remixed, and/or curated by Tony R. Kuphaldt (All About Circuits) via source content that was edited to the style and standards of the LibreTexts platform.

16.3: Inductor Transient Response

Inductors have the exact opposite characteristics of capacitors. Whereas capacitors store energy in an *electric* field (produced by the voltage between two plates), inductors store energy in a *magnetic* field(produced by the current through wire). Thus, while the stored energy in a capacitor tries to maintain a constant voltage across its terminals, the stored energy in an inductor tries to maintain a constant current through its windings. Because of this, inductors oppose changes in current, and act precisely the opposite of capacitors, which oppose changes in voltage. A fully discharged inductor (no magnetic field), having zero current through it, will initially act as an open-circuit when attached to a source of voltage (as it tries to maintain zero current), dropping maximum voltage across its leads. Over time, the inductor's current rises to the maximum value allowed by the circuit, and the terminal voltage decreases correspondingly. Once the inductor's terminal voltage has decreased to a minimum (zero for a "perfect" inductor), the current will stay at a maximum level, and it will behave essentially as a short-circuit.

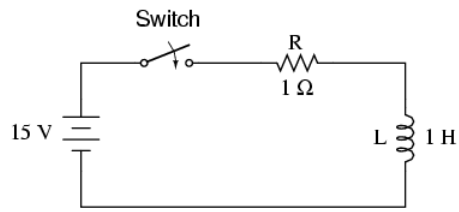

When the switch is first closed, the voltage across the inductor will immediately jump to battery voltage (acting as though it were an open-circuit) and decay down to zero over time (eventually acting as though it were a short-circuit). Voltage across the inductor is determined by calculating how much voltage is being dropped across R, given the current through the inductor, and subtracting that voltage value from the battery to see what's left. When the switch is first closed, the current is zero, then it increases over time until it is equal to the battery voltage divided by the series resistance of 1 Ω. This behavior is precisely opposite that of the series resistor-capacitor circuit, where current started at a maximum and capacitor voltage at zero. Let's see how this works using real values:

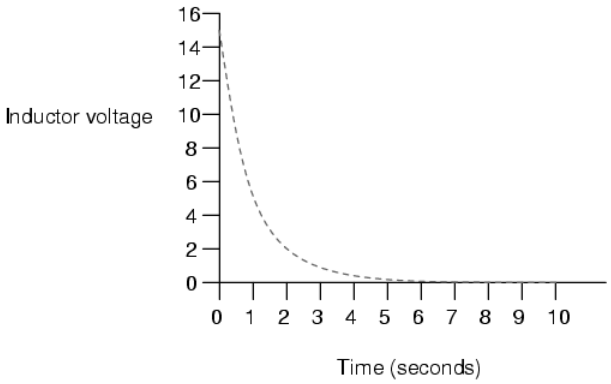

Time (seconds)	Battery voltage	Inductor voltage	Current
0	15 V	15 V	0
0.5	15 V	9.098 V	5.902 A
1	15 V	5.518 V	9.482 A
2	15 V	2.030 V	12.97 A
3	15 V	0.747 V	14.25 A
4	15 V	0.275 V	14.73 A
5	15 V	0.101 V	14.90 A
6	15 V	37.181 mV	14.96 A
10	15 V	0.681 mV	14.99 A

Just as with the RC circuit, the inductor voltage's approach to 0 volts and the current's approach to 15 amps over time is *asymptotic*. For all practical purposes, though, we can say that the inductor voltage will eventually reach 0 volts and that the current will eventually equal the maximum of 15 amps.

Again, we can use the SPICE circuit analysis program to chart this asymptotic decay of inductor voltage and buildup of inductor current in a more graphical form (inductor current is plotted in terms of voltage drop across the resistor, using the resistor as a shunt to measure current):

```
inductor charging
v1 1 0 dc 15
r1 1 2 1
l1 2 0 1 ic=0
.tran .5 10 uic
.plot tran v(2,0) v(1,2)
.end
legend:

*: v(2)   Inductor voltage
+: v(1,2) Inductor current

time            v(2)

(*+)----------- 0.000E+00     5.000E+00     1.000E+01     1.500E+01
- - - - - - - - - - - - - - - - - - - - - - - - - - - - - - - - - - - -
0.000E+00  1.500E+01 +            .             .             *
5.000E-01  9.119E+00 .            . +         * .             .
1.000E+00  5.526E+00 .            .*           +.             .
1.500E+00  3.343E+00 .        *   .             .    +        .
2.000E+00  2.026E+00 .     *      .             .       +     .
2.500E+00  1.226E+00 .  *         .             .          +  .
3.000E+00  7.429E-01 . *          .             .           + .
3.500E+00  4.495E-01 .*           .             .            +.
4.000E+00  2.724E-01 .*           .             .            +.
4.500E+00  1.648E-01 *            .             .             +
5.000E+00  9.987E-02 *            .             .             +
5.500E+00  6.042E-02 *            .             .             +
6.000E+00  3.662E-02 *            .             .             +
6.500E+00  2.215E-02 *            .             .             +
7.000E+00  1.343E-02 *            .             .             +
7.500E+00  8.123E-03 *            .             .             +
8.000E+00  4.922E-03 *            .             .             +
8.500E+00  2.978E-03 *            .             .             +
9.000E+00  1.805E-03 *            .             .             +
9.500E+00  1.092E-03 *            .             .             +
1.000E+01  6.591E-04 *            .             .             +
- - - - - - - - - - - - - - - - - - - - - - - - - - - - - - - - - - - -
```

Notice how the voltage decreases (to the left of the plot) very quickly at first, then tapering off as time goes on. Current also changes very quickly at first then levels off as time goes on, but it is approaching maximum (right of scale) while voltage approaches minimum.

Review

- A fully "discharged" inductor (no current through it) initially acts as an open circuit (voltage drop with no current) when faced with the sudden application of voltage. After "charging" fully to the final level of current, it acts as a short circuit (current with no voltage drop).
- In a resistor-inductor "charging" circuit, inductor current goes from nothing to full value while voltage goes from maximum to zero, both variables changing most rapidly at first, approaching their final values slower and slower as time goes on.

This page titled 16.3: Inductor Transient Response is shared under a GNU Free Documentation License 1.3 license and was authored, remixed, and/or curated by Tony R. Kuphaldt (All About Circuits) via source content that was edited to the style and standards of the LibreTexts platform.

16.4: Voltage and Current Calculations

There's a sure way to calculate any of the values in a reactive DC circuit over time.

Calculating Values in a Reactive DC Circuit

The first step is to identify the starting and final values for whatever quantity the capacitor or inductor opposes change in; that is, whatever quantity the reactive component is trying to hold constant. For capacitors, this quantity is *voltage*; for inductors, this quantity is *current*. When the switch in a circuit is closed (or opened), the reactive component will attempt to maintain that quantity at the same level as it was before the switch transition, so that value is to be used for the "starting" value. The final value for this quantity is whatever that quantity will be after an infinite amount of time. This can be determined by analyzing a capacitive circuit as though the capacitor was an open-circuit, and an inductive circuit as though the inductor was a short-circuit because that is what these components behave as when they've reached "full charge," after an infinite amount of time.

Calculating the Time Constant of a Circuit

The next step is to calculate the *time constant* of the circuit: the amount of time it takes for voltage or current values to change approximately 63 percent from their starting values to their final values in a transient situation. In a series RC circuit, the time constant is equal to the total resistance in ohms multiplied by the total capacitance in farads. For a series L/R circuit, it is the total inductance in henrys divided by the total resistance in ohms. In either case, the time constant is expressed in units of *seconds* and symbolized by the Greek letter "tau" (τ):

For resistor-capacitor circuits:

$$\tau = RC$$

For resistor-inductor circuits:

$$\tau = \frac{L}{R}$$

The rise and fall of circuit values such as voltage and current in response to a transient is, as was mentioned before, asymptotic. Being so, the values begin to rapidly change soon after the transient and settle down over time. If plotted on a graph, the approach to the final values of voltage and current form exponential curves.

As was stated before, one time constant is the amount of time it takes for any of these values to change about 63 percent from their starting values to their (ultimate) final values. For every time constant, these values move (approximately) 63 percent closer to their eventual goal. The mathematical formula for determining the precise percentage is quite simple:

$$\text{Percentage of change} = \left(1 - \frac{1}{e^{t/\tau}}\right) \times 100\%$$

The letter *e* stands for Euler's constant, which is approximately 2.7182818. It is derived from calculus techniques, after mathematically analyzing the asymptotic approach of the circuit values. After one time constant's worth of time, the percentage of change from starting value to final value is:

$$\left(1 - \frac{1}{e^{1}}\right) \times 100\% = 63.212\%$$

After two time constant's worth of time, the percentage of change from starting value to final value is:

$$\left(1 - \frac{1}{e^{2}}\right) \times 100\% = 86.466\%$$

After ten time constant's worth of time, the percentage is:

$$\left(1 - \frac{1}{e^{10}}\right) \times 100\% = 99.995\%$$

The more time that passes since the transient application of voltage from the battery, the larger the value of the denominator in the fraction, which makes for a smaller value for the whole fraction, which makes for a grand total (1 minus the fraction) approaching 1, or 100 percent.

Universal Time Constant Formula

We can make a more universal formula out of this one for the determination of voltage and current values in transient circuits, by multiplying this quantity by the difference between the final and starting circuit values:

Universal Time Constant Formula

$$\text{Change} = (\text{Final-Start})\left(1 - \frac{1}{e^{t/\tau}}\right)$$

Where,

Final = Value of calculated variable after infinite time (its *ultimate* value)

Start = Initial value of calculated variable

e = Euler's number (≈2.7182818)

t = Time in seconds

τ = Time constant for circuit in seconds

Let's analyze the voltage rise on the series resistor-capacitor circuit shown at the beginning of the chapter.

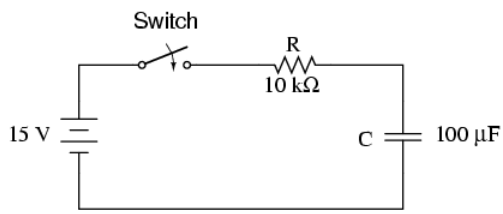

Note that we're choosing to analyze voltage because that is the quantity capacitors tend to hold constant. Although the formula works quite well for current, the starting and final values for current are actually derived from the capacitor's voltage, so calculating voltage is a more direct method. The resistance is 10 kΩ, and the capacitance is 100 µF (microfarads). Since the time constant (τ) for an RC circuit is the product of resistance and capacitance, we obtain a value of 1 second:

$$\tau = RC$$
$$\tau = (10\ \text{k}\Omega)(100\ \mu\text{F})$$
$$\tau = 1\ \text{second}$$

If the capacitor starts in a totally discharged state (0 volts), then we can use that value of voltage for a "starting" value. The final value, of course, will be the battery voltage (15 volts). Our universal formula for capacitor voltage in this circuit looks like this:

$$\text{Change} = (\text{Final-Start})\left(1 - \frac{1}{e^{t/\tau}}\right)$$

$$\text{Change} = (15\ \text{V} - 0\ \text{V})\left(1 - \frac{1}{e^{t/1}}\right)$$

So, after 7.25 seconds of applying voltage through the closed switch, our capacitor voltage will have increased by:

$$\text{Change} = (15\ \text{V} - 0\ \text{V})\left(1 - \frac{1}{e^{7.25/1}}\right)$$

$$\text{Change} = (15\ \text{V} - 0\ \text{V})(0.99929)$$

$$\text{Change} = 14.989\ \text{V}$$

Since we started at a capacitor voltage of 0 volts, this increase of 14.989 volts means that we have 14.989 volts after 7.25 seconds.

The same formula will work for determining current in that circuit, too. Since we know that a discharged capacitor initially acts like a short-circuit, the starting current will be the maximum amount possible: 15 volts (from the battery) divided by 10 kΩ (the only opposition to current in the circuit at the beginning):

$$\text{Starting current} = \frac{15\ \text{V}}{10\ \text{k}\Omega}$$

$$\text{Starting current} = 1.5\ \text{mA}$$

We also know that the final current will be zero, since the capacitor will eventually behave as an open-circuit, meaning that eventually no electrons will flow in the circuit. Now that we know both the starting and final current values, we can use our universal formula to determine the current after 7.25 seconds of switch closure in the same RC circuit:

$$\text{Change} = (0\ \text{mA} - 1.5\ \text{mA})\left(1 - \frac{1}{e^{7.25/1}}\right)$$

$$\text{Change} = (0\ \text{mA} - 1.5\ \text{mA})(0.99929)$$

$$\text{Change} = -\ 1.4989\ \text{mA}$$

Note that the figure obtained for change is negative, not positive! This tells us that current has *decreased*rather than increased with the passage of time. Since we started at a current of 1.5 mA, this decrease (-1.4989 mA) means that we have 0.001065 mA (1.065 µA) after 7.25 seconds.

We could have also determined the circuit current at time=7.25 seconds by subtracting the capacitor's voltage (14.989 volts) from the battery's voltage (15 volts) to obtain the voltage drop across the 10 kΩ resistor, then figuring current through the resistor (and the whole series circuit) with Ohm's Law (I=E/R). Either way, we should obtain the same answer:

$$I = \frac{E}{R}$$

$$I = \frac{15\ \text{V} - 14.989\ \text{V}}{10\ \text{k}\Omega}$$

$$I = 1.065\ \mu\text{A}$$

Using the Universal Time Constant Formula for Analyzing Inductive Circuits

The universal time constant formula also works well for analyzing inductive circuits. Let's apply it to our example L/R circuit in the beginning of the chapter:

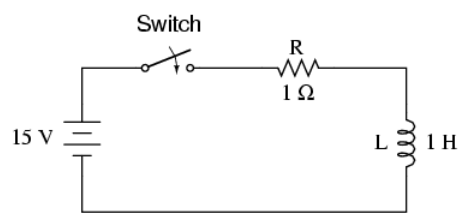

With an inductance of 1 henry and a series resistance of 1 Ω, our time constant is equal to 1 second:

$$\tau = \frac{L}{R}$$

$$\tau = \frac{1\ \text{H}}{1\ \Omega}$$

$$\tau = 1\ \text{second}$$

Because this is an inductive circuit, and we know that inductors oppose change in current, we'll set up our time constant formula for starting and final values of current. If we start with the switch in the open position, the current will be equal to zero, so zero is

our starting current value. After the switch has been left closed for a long time, the current will settle out to its final value, equal to the source voltage divided by the total circuit resistance (I=E/R), or 15 amps in the case of this circuit.

If we desired to determine the value of current at 3.5 seconds, we would apply the universal time constant formula as such:

$$\text{Change} = (15\text{ A} - 0\text{ A})\left(1 - \frac{1}{e^{3.5/1}}\right)$$

$$\text{Change} = (15\text{ A} - 0\text{ A})(0.9698)$$

$$\text{Change} = 14.547\text{ A}$$

Given the fact that our starting current was zero, this leaves us at a circuit current of 14.547 amps at 3.5 seconds' time.

Determining voltage in an inductive circuit is best accomplished by first figuring circuit current and then calculating voltage drops across resistances to find what's left to drop across the inductor. With only one resistor in our example circuit (having a value of 1 Ω), this is rather easy:

$$E_R = (14.547\text{ A})(1\ \Omega)$$

$$E_R = 14.547\text{ V}$$

Subtracted from our battery voltage of 15 volts, this leaves 0.453 volts across the inductor at time=3.5 seconds.

$$E_L = E_{battery} - E_R$$

$$E_L = 15\text{ V} - 14.547\text{ V}$$

$$E_L = 0.453\text{ V}$$

REVIEW

- Universal Time Constant Formula:

Universal Time Constant Formula

$$\text{Change} = (\text{Final-Start})\left(1 - \frac{1}{e^{t/\tau}}\right)$$

Where,

Final = Value of calculated variable after infinite time (its *ultimate* value)

Start = Initial value of calculated variable

e = Euler's number (≈2.7182818)

t = Time in seconds

τ = Time constant for circuit in seconds

- To analyze an RC or L/R circuit, follow these steps:

(1): Determine the time constant for the circuit (RC or L/R).

(2): Identify the quantity to be calculated (whatever quantity whose change is directly opposed by the reactive component. For capacitors this is voltage; for inductors this is current).

(3): Determine the starting and final values for that quantity.

(4): Plug all these values (Final, Start, time, time constant) into the universal time constant formula and solve for *change* in quantity.

(5): If the starting value was zero, then the actual value at the specified time is equal to the calculated change given by the universal formula. If not, add the change to the starting value to find out where you're at.

This page titled 16.4: Voltage and Current Calculations is shared under a GNU Free Documentation License 1.3 license and was authored, remixed, and/or curated by Tony R. Kuphaldt (All About Circuits) via source content that was edited to the style and standards of the LibreTexts

platform.

16.05: Why L

This page was auto-generated because a user created a sub-page to this page.

16.05: Why L is shared under a not declared license and was authored, remixed, and/or curated by LibreTexts.

16.5: Why L/R and not LR?

Learn About L/R Time Constants

It is often perplexing to new students of electronics why the time-constant calculation for an inductive circuit is different from that of a capacitive circuit. For a resistor-capacitor circuit, the time constant (in seconds) is calculated from the product (multiplication) of resistance in ohms and capacitance in farads: $\tau=RC$. However, for a resistor-inductor circuit, the time constant is calculated from the quotient (division) of inductance in henrys over the resistance in ohms: $\tau=L/R$.

This difference in calculation has a profound impact on the *qualitative* analysis of transient circuit response. Resistor-capacitor circuits respond quicker with low resistance and slower with high resistance; resistor-inductor circuits are just the opposite, responding quicker with high resistance and slower with low resistance. While capacitive circuits seem to present no intuitive trouble for the new student, inductive circuits tend to make less sense.

Capacitor and Inductor Energy

Key to the understanding of transient circuits is a firm grasp on the concept of energy transfer and the electrical nature of it. Both capacitors and inductors have the ability to store quantities of energy, the capacitor storing energy in the medium of an electric field and the inductor storing energy in the medium of a magnetic field. A capacitor's electrostatic energy storage manifests itself in the tendency to maintain a constant voltage across the terminals. An inductor's electromagnetic energy storage manifests itself in the tendency to maintain a constant current through it.

Let's consider what happens to each of these reactive components in a condition of *discharge*: that is, when energy is being released from the capacitor or inductor to be dissipated in the form of heat by a resistor:

Capacitor and inductor discharge

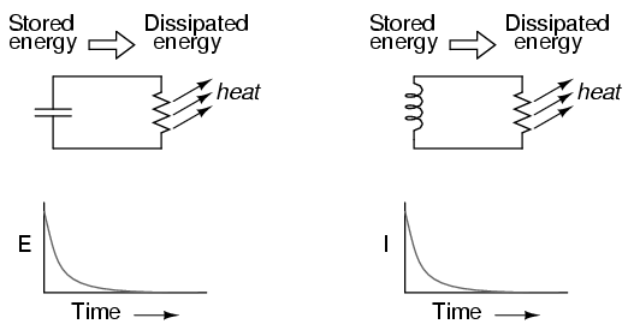

In either case, heat dissipated by the resistor constitutes energy *leaving* the circuit, and as a consequence the reactive component loses its store of energy over time, resulting in a measurable decrease of either voltage (capacitor) or current (inductor) expressed on the graph. The more power dissipated by the resistor, the faster this discharging action will occur, because power is by definition the rate of energy transfer over time.

Therefore, a transient circuit's time constant will be dependent upon the resistance of the circuit. Of course, it is also dependent upon the size (storage capacity) of the reactive component, but since the relationship of resistance to time constant is the issue of this section, we'll focus on the effects of resistance alone. A circuit's time constant will be less (faster discharging rate) if the resistance value is such that it maximizes power dissipation (rate of energy transfer into heat). For a capacitive circuit where stored energy manifests itself in the form of a voltage, this means the resistor must have a low resistance value so as to maximize current for any given amount of voltage (given voltage times high current equals high power). For an inductive circuit where stored energy manifests itself in the form of a current, this means the resistor must have a high resistance value so as to maximize voltage drop for any given amount of current (given current times high voltage equals high power).

This may be analogously understood by considering capacitive and inductive energy storage in mechanical terms. Capacitors, storing energy electrostatically, are reservoirs of *potential energy*. Inductors, storing energy electromagnetically

(electro*dynamically*), are reservoirs of *kinetic energy*. In mechanical terms, potential energy can be illustrated by a suspended mass, while kinetic energy can be illustrated by a moving mass. Consider the following illustration as an analogy of a capacitor:

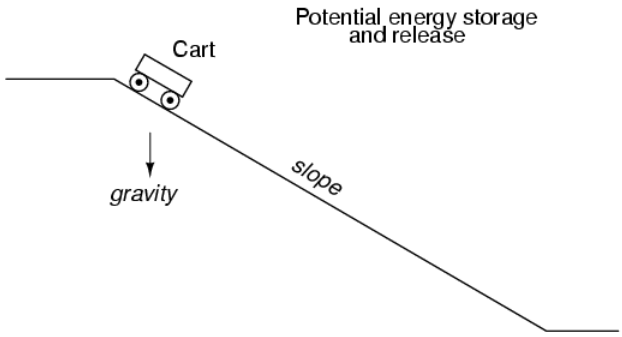

The cart, sitting at the top of a slope, possesses potential energy due to the influence of gravity and its elevated position on the hill. If we consider the cart's braking system to be analogous to the resistance of the system and the cart itself to be the capacitor, what resistance value would facilitate rapid release of that potential energy? Minimum resistance (no brakes) would diminish the cart's altitude quickest, of course! Without any braking action, the cart will freely roll downhill, thus expending that potential energy as it loses height. With maximum braking action (brakes firmly set), the cart will refuse to roll (or it will roll very slowly) and it will hold its potential energy for a long period of time. Likewise, a capacitive circuit will discharge rapidly if its resistance is low and discharge slowly if its resistance is high.

Now let's consider a mechanical analogy for an inductor, showing its stored energy in kinetic form:

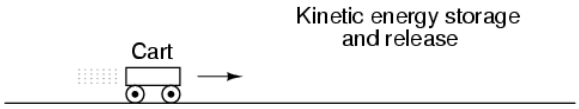

This time the cart is on level ground, already moving. Its energy is kinetic (motion), not potential (height). Once again if we consider the cart's braking system to be analogous to circuit resistance and the cart itself to be the inductor, what resistance value would facilitate rapid release of that kinetic energy? Maximum resistance (maximum braking action) would slow it down quickest, of course! With maximum braking action, the cart will quickly grind to a halt, thus expending its kinetic energy as it slows down. Without any braking action, the cart will be free to roll on indefinitely (barring any other sources of friction like aerodynamic drag and rolling resistance), and it will hold its kinetic energy for a long period of time. Likewise, an inductive circuit will discharge rapidly if its resistance is high and discharge slowly if its resistance is low.

Hopefully this explanation sheds more light on the subject of time constants and resistance, and why the relationship between the two is opposite for capacitive and inductive circuits.

This page titled 16.5: Why L/R and not LR? is shared under a GNU Free Documentation License 1.3 license and was authored, remixed, and/or curated by Tony R. Kuphaldt (All About Circuits) via source content that was edited to the style and standards of the LibreTexts platform.

16.6: Complex Voltage and Current Calculations

There are circumstances when you may need to analyze a DC reactive circuit when the starting values of voltage and current are not respective of a fully "discharged" state. In other words, the capacitor might start at a partially-charged condition instead of starting at zero volts, and an inductor might start with some amount of current already through it, instead of zero as we have been assuming so far. Take this circuit as an example, starting with the switch open and finishing with the switch in the closed position:

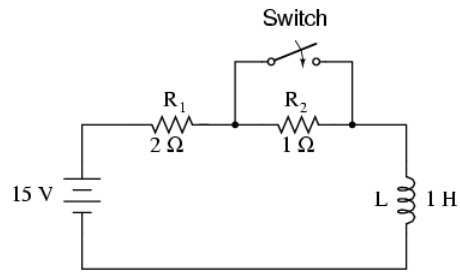

Since this is an inductive circuit, we'll start our analysis by determining the start and end values for *current*. This step is vitally important when analyzing inductive circuits, as the starting and ending *voltage* can only be known after the current has been determined! With the switch open (starting condition), there is a total (series) resistance of 3 Ω, which limits the final current in the circuit to 5 amps:

$$I = \frac{E}{R}$$

$$I = \frac{15\ \text{V}}{3\ \Omega}$$

$$I = 5\ \text{A}$$

So, before the switch is even closed, we have a current through the inductor of 5 amps, rather than starting from 0 amps as in the previous inductor example. With the switch closed (the final condition), the 1 Ω resistor is shorted across (bypassed), which changes the circuit's total resistance to 2 Ω. With the switch closed, the final value for current through the inductor would then be:

$$I = \frac{E}{R}$$

$$I = \frac{15\ \text{V}}{2\ \Omega}$$

$$I = 7.5\ \text{A}$$

So, the inductor in this circuit has a starting current of 5 amps and an ending current of 7.5 amps. Since the "timing" will take place during the time that the switch is closed and R_2 is shorted past, we need to calculate our time constant from L_1 and R_1: 1 Henry divided by 2 Ω, or τ = 1/2 second. With these values, we can calculate what will happen to the current over time. The voltage across the inductor will be calculated by multiplying the current by 2 (to arrive at the voltage across the 2 Ω resistor), then subtracting that from 15 volts to see what's left. If you realize that the voltage across the inductor starts at 5 volts (when the switch is first closed) and decays to 0 volts over time, you can also use these figures for starting/ending values in the general formula and derive the same results:

$$\text{Change} = (7.5\ \text{A} - 5\ \text{A})\left(1 - \frac{1}{e^{t/0.5}}\right) \quad \textit{Calculating current}$$

. . . or . . .

$$\text{Change} = (0\ \text{V} - 5\ \text{V})\left(1 - \frac{1}{e^{t/0.5}}\right) \quad \textit{Calculating voltage}$$

```
-----------------------------------------
|   Time   | Battery | Inductor  | Current  |
|(seconds) | voltage |  voltage  |          |
|----------------------------------------|
|    0     |   15 V  |    5 V    |    5 A   |
|----------------------------------------|
|   0.1    |   15 V  |  4.094 V  |  5.453 A |
|----------------------------------------|
|   0.25   |   15 V  |  3.033 V  |  5.984 A |
|----------------------------------------|
|   0.5    |   15 V  |  1.839 V  |  6.580 A |
|----------------------------------------|
|    1     |   15 V  |  0.677 V  |  7.162 A |
|----------------------------------------|
|    2     |   15 V  |  0.092 V  |  7.454 A |
|----------------------------------------|
|    3     |   15 V  |  0.012 V  |  7.494 A |
-----------------------------------------
```

This page titled 16.6: Complex Voltage and Current Calculations is shared under a GNU Free Documentation License 1.3 license and was authored, remixed, and/or curated by Tony R. Kuphaldt (All About Circuits) via source content that was edited to the style and standards of the LibreTexts platform.

16.7: Complex Circuits

What do we do if we come across a circuit more complex than the simple series configurations we've seen so far? Take this circuit as an example:

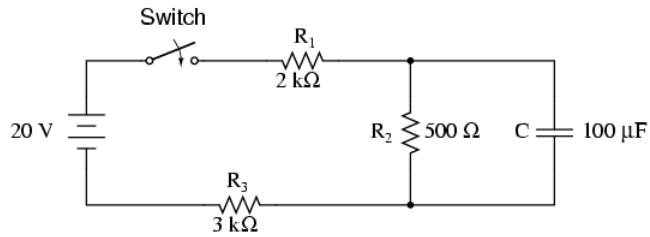

The simple time constant formula (τ=RC) is based on a simple series resistance connected to the capacitor. For that matter, the time constant formula for an inductive circuit (τ=L/R) is also based on the assumption of a simple series resistance. So, what can we do in a situation like this, where resistors are connected in a series-parallel fashion with the capacitor (or inductor)?

The answer comes from our studies in network analysis. Thevenin's Theorem tells us that we can reduce *any* linear circuit to an equivalent of one voltage source, one series resistance, and a load component through a couple of simple steps. To apply Thevenin's Theorem to our scenario here, we'll regard the reactive component (in the above example circuit, the capacitor) as the load and remove it temporarily from the circuit to find the Thevenin voltage and Thevenin resistance. Then, once we've determined the Thevenin equivalent circuit values, we'll re-connect the capacitor and solve for values of voltage or current over time as we've been doing so far.

After identifying the capacitor as the "load," we remove it from the circuit and solve for voltage across the load terminals (assuming, of course, that the switch is closed):

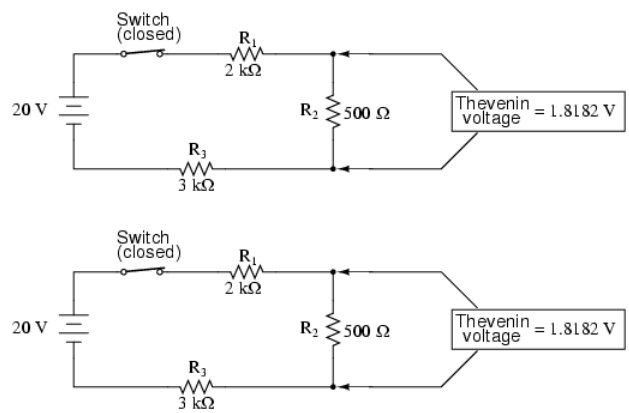

This step of the analysis tells us that the voltage across the load terminals (same as that across resistor R_2) will be 1.8182 volts with no load connected. With a little reflection, it should be clear that this will be our final voltage across the capacitor, seeing as how a fully-charged capacitor acts like an open circuit, drawing zero current. We will use this voltage value for our Thevenin equivalent circuit source voltage.

Now, to solve for our Thevenin resistance, we need to eliminate all power sources in the original circuit and calculate resistance as seen from the load terminals:

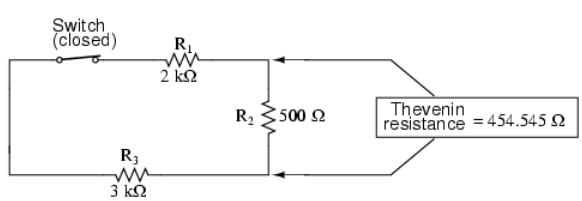

Re-drawing our circuit as a Thevenin equivalent, we get this:

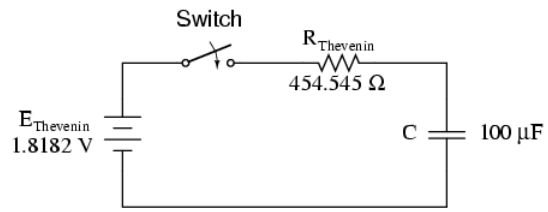

Our time constant for this circuit will be equal to the Thevenin resistance times the capacitance (τ=RC). With the above values, we calculate:

$$\tau = RC$$

$$\tau = (454.545\ \Omega)(100\ \mu F)$$

$$\tau = 45.4545 \text{ milliseconds}$$

Now, we can solve for voltage across the capacitor directly with our universal time constant formula. Let's calculate for a value of 60 milliseconds. Because this is a capacitive formula, we'll set our calculations up for voltage:

$$\text{Change} = (\text{Final - Start})\left(1 - \frac{1}{e^{t/\tau}}\right)$$

$$\text{Change} = (1.8182\ \text{V} - 0\ \text{V})\left(1 - \frac{1}{e^{60m/45.4545m}}\right)$$

$$\text{Change} = (1.8182\ \text{V})(0.73286)$$

$$\text{Change} = 1.3325\ \text{V}$$

Again, because our starting value for capacitor voltage was assumed to be zero, the actual voltage across the capacitor at 60 milliseconds is equal to the amount of voltage change from zero, or 1.3325 volts.

We could go a step further and demonstrate the equivalence of the Thevenin RC circuit and the original circuit through computer analysis. I will use the SPICE analysis program to demonstrate this:

```
Comparison RC analysis
* first, the netlist for the original circuit:
v1 1 0 dc 20
r1 1 2 2k
r2 2 3 500
r3 3 0 3k
c1 2 3 100u ic=0
* then, the netlist for the thevenin equivalent:
v2 4 0 dc 1.818182
r4 4 5 454.545
c2 5 0 100u ic=0
* now, we analyze for a transient, sampling every .005 seconds
* over a time period of .37 seconds total, printing a list of
* values for voltage across the capacitor in the original
* circuit (between modes 2 and 3) and across the capacitor in
* the thevenin equivalent circuit (between nodes 5 and 0)
.tran .005 0.37 uic
.print tran v(2,3) v(5,0)
.end
```

```
time          v(2,3)      v(5)

0.000E+00     4.803E-06   4.803E-06
5.000E-03     1.890E-01   1.890E-01
1.000E-02     3.580E-01   3.580E-01
1.500E-02     5.082E-01   5.082E-01
2.000E-02     6.442E-01   6.442E-01
2.500E-02     7.689E-01   7.689E-01
3.000E-02     8.772E-01   8.772E-01
3.500E-02     9.747E-01   9.747E-01
4.000E-02     1.064E+00   1.064E+00
4.500E-02     1.142E+00   1.142E+00
5.000E-02     1.212E+00   1.212E+00
5.500E-02     1.276E+00   1.276E+00
6.000E-02     1.333E+00   1.333E+00
6.500E-02     1.383E+00   1.383E+00
7.000E-02     1.429E+00   1.429E+00
7.500E-02     1.470E+00   1.470E+00
8.000E-02     1.505E+00   1.505E+00
8.500E-02     1.538E+00   1.538E+00
9.000E-02     1.568E+00   1.568E+00
9.500E-02     1.594E+00   1.594E+00
1.000E-01     1.617E+00   1.617E+00
1.050E-01     1.638E+00   1.638E+00
1.100E-01     1.657E+00   1.657E+00
1.150E-01     1.674E+00   1.674E+00
1.200E-01     1.689E+00   1.689E+00
1.250E-01     1.702E+00   1.702E+00
1.300E-01     1.714E+00   1.714E+00
1.350E-01     1.725E+00   1.725E+00
1.400E-01     1.735E+00   1.735E+00
1.450E-01     1.744E+00   1.744E+00
1.500E-01     1.752E+00   1.752E+00
1.550E-01     1.758E+00   1.758E+00
1.600E-01     1.765E+00   1.765E+00
1.650E-01     1.770E+00   1.770E+00
1.700E-01     1.775E+00   1.775E+00
1.750E-01     1.780E+00   1.780E+00
1.800E-01     1.784E+00   1.784E+00
1.850E-01     1.787E+00   1.787E+00
1.900E-01     1.791E+00   1.791E+00
1.950E-01     1.793E+00   1.793E+00
2.000E-01     1.796E+00   1.796E+00
2.050E-01     1.798E+00   1.798E+00
2.100E-01     1.800E+00   1.800E+00
2.150E-01     1.802E+00   1.802E+00
```

```
2.200E-01     1.804E+00   1.804E+00
2.250E-01     1.805E+00   1.805E+00
2.300E-01     1.807E+00   1.807E+00
2.350E-01     1.808E+00   1.808E+00
2.400E-01     1.809E+00   1.809E+00
2.450E-01     1.810E+00   1.810E+00
2.500E-01     1.811E+00   1.811E+00
2.550E-01     1.812E+00   1.812E+00
2.600E-01     1.812E+00   1.812E+00
2.650E-01     1.813E+00   1.813E+00
2.700E-01     1.813E+00   1.813E+00
2.750E-01     1.814E+00   1.814E+00
2.800E-01     1.814E+00   1.814E+00
2.850E-01     1.815E+00   1.815E+00
2.900E-01     1.815E+00   1.815E+00
2.950E-01     1.815E+00   1.815E+00
3.000E-01     1.816E+00   1.816E+00
3.050E-01     1.816E+00   1.816E+00
3.100E-01     1.816E+00   1.816E+00
3.150E-01     1.816E+00   1.816E+00
3.200E-01     1.817E+00   1.817E+00
3.250E-01     1.817E+00   1.817E+00
3.300E-01     1.817E+00   1.817E+00
3.350E-01     1.817E+00   1.817E+00
3.400E-01     1.817E+00   1.817E+00
3.450E-01     1.817E+00   1.817E+00
3.500E-01     1.817E+00   1.817E+00
3.550E-01     1.817E+00   1.817E+00
3.600E-01     1.818E+00   1.818E+00
3.650E-01     1.818E+00   1.818E+00
3.700E-01     1.818E+00   1.818E+00
```

At every step along the way of the analysis, the capacitors in the two circuits (original circuit versus Thevenin equivalent circuit) are at equal voltage, thus demonstrating the equivalence of the two circuits.

Review

- To analyze an RC or L/R circuit more complex than simple series, convert the circuit into a Thevenin equivalent by treating the reactive component (capacitor or inductor) as the “load” and reducing everything else to an equivalent circuit of one voltage source and one series resistor. Then, analyze what happens over time with the universal time constant formula.

This page titled 16.7: Complex Circuits is shared under a GNU Free Documentation License 1.3 license and was authored, remixed, and/or curated by Tony R. Kuphaldt (All About Circuits) via source content that was edited to the style and standards of the LibreTexts platform.

16.8: Solving for Unknown Time

Sometimes it is necessary to determine the length of time that a reactive circuit will take to reach a predetermined value. This is especially true in cases where we're designing an RC or L/R circuit to perform a precise timing function. To calculate this, we need to modify our "Universal time constant formula." The original formula looks like this:

$$\text{Change} = (\text{Final-Start})\left(1 - \frac{1}{e^{t/\tau}}\right) = (\text{Final-Start})\left(1 - e^{-t/\tau}\right)$$

However, we want to solve for time, not the amount of change. To do this, we algebraically manipulate the formula so that time is all by itself on one side of the equal sign, with all the rest on the other side:

$$\text{Change} = (\text{Final-Start})\left(1 - e^{-t/\tau}\right)$$

$$\left(1 - \frac{\text{Change}}{\text{Final-Start}}\right) = e^{-t/\tau}$$

$$\ln\left(1 - \frac{\text{Change}}{\text{Final-Start}}\right) = \ln(e^{-t/\tau})$$

The *ln* designation just to the right of the time constant term is the *natural logarithm* function: the exact reverse of taking the power of *e*. In fact, the two functions (powers of e and natural logarithms) can be related as such:

If $e^x = a$, then $\ln a = x$.

If $e^x = a$, then the natural logarithm of a will give you x: the power that *e* must be was raised to in order to produce *a*.

Let's see how this all works on a real example circuit. Taking the same resistor-capacitor circuit from the beginning of the chapter, we can work "backwards" from previously determined values of voltage to find how long it took to get there.

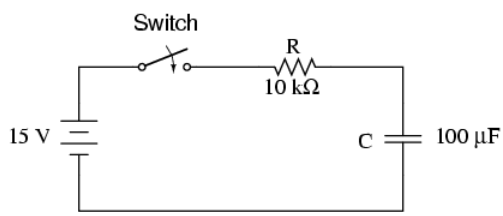

The time constant is still the same amount: 1 second (10 kΩ times 100 µF), and the starting/final values remain unchanged as well (E_C = 0 volts starting and 15 volts final). According to our chart at the beginning of the chapter, the capacitor would be charged to 12.970 volts at the end of 2 seconds. Let's plug 12.970 volts in as the "Change" for our new formula and see if we arrive at an answer of 2 seconds:

$$t = -(1\text{ second})\left(\ln\left(1 - \frac{12.970\text{ V}}{15\text{ V} - 0\text{ V}}\right)\right)$$

$$t = -(1\text{ second})(\ln 0.13534))$$

$$t = (1\text{ second})(2)$$

$$t = 2\text{ seconds}$$

Indeed, we end up with a value of 2 seconds for the time it takes to go from 0 to 12.970 volts across the capacitor. This variation of the universal time constant formula will work for all capacitive and inductive circuits, both "charging" and "discharging," provided the proper values of time constant, Start, Final, and Change are properly determined beforehand. Remember, the most important step in solving these problems is the initial set-up. After that, its just a lot of button-pushing on your calculator!

Review

- To determine the time it takes for an RC or L/R circuit to reach a certain value of voltage or current, you'll have to modify the universal time constant formula to solve for *time* instead of *change*.

$$t = -\tau \left(\ln \left(1 - \frac{\text{Change}}{\text{Final - Start}} \right) \right)$$

- The mathematical function for reversing an exponent of "e" is the natural logarithm (ln), provided on any scientific calculator.

This page titled 16.8: Solving for Unknown Time is shared under a GNU Free Documentation License 1.3 license and was authored, remixed, and/or curated by Tony R. Kuphaldt (All About Circuits) via source content that was edited to the style and standards of the LibreTexts platform.

Index

C

cadmium cells
- 11.4: Special-purpose Batteries

circuit wiring
- 2.7: Circuit Wiring

cold junction
- 9.5: Thermocouples

conductors
- 1.2: Conductors, Insulators, and Electron Flow

current
- 1.4: Voltage and Current

E

electric circuits
- 1.3: What Are Electric Circuits?

F

fuse
- 12.4: Fuses

G

generator
- 9.4: Tachogenerators

H

Helipot
- 6.1: Voltage Divider Circuits

I

Induction
- 14.5: Electromagnetic Induction

insulators
- 1.2: Conductors, Insulators, and Electron Flow

J

Joule’s law
- 2.4: Calculating Electric Power

K

Kirchhoff’s Current Law
- 6.4: Kirchhoff’s Current Law (KCL)

Kirchhoff’s Voltage Law
- 6.2: Kirchhoff’s Voltage Law (KVL)

M

Millman’s Theorem
- 10.6: Millman’s Theorem

Mutual Inductance
- 14.6: Mutual Inductance

N

Nonlinear Conduction
- 2.6: Nonlinear Conduction

O

Ohm's Law
- 2: Ohm's Law

P

Permanent Magnets
- 14.1: Permanent Magnets

Permeability
- 14.4: Permeability and Saturation

Power
- 2.3: Power in Electric Circuits
- 2.4: Calculating Electric Power

power (electric)
- 2.4: Calculating Electric Power

R

resistance
- 1.5: Resistance

resistors
- 2.5: Resistors

S

Seebeck effect
- 9.5: Thermocouples

static electricity
- 1.1: Static Electricity

Superposition Theorem
- 10.7: Superposition Theorem

T

tachogenerator
- 9.4: Tachogenerators

tachometer
- 9.4: Tachogenerators

thermocouple
- 9.5: Thermocouples

Thevenin’s Theorem
- 10.8: Thevenin’s Theorem

V

voltage
- 1.4: Voltage and Current

Voltage Dividers
- 6.1: Voltage Divider Circuits

W

water level indicator (LI)
- 9.1: Analog and Digital Signals

Weston cells
- 11.4: Special-purpose Batteries

Credits

All entries arranged in alphabetical order of surname. Major contributions are listed by individual name with some detail on the nature of the contribution(s), date, contact info, etc. Minor contributions (typo corrections, etc.) are listed by name only for reasons of brevity. Please understand that when I classify a contribution as “minor,” it is in no way inferior to the effort or value of a “major” contribution, just smaller in the sense of less text changed. Any and all contributions are gratefully accepted. I am indebted to all those who have given freely of their own knowledge, time, and resources to make this a better book!

John Anhalt

- **Date(s) of contribution(s):** December 2008
- **Nature of contribution:** Updated lead-acid cell chemistry, Ch 11
- **Contact at:** jpa@anhalt.org

Benjamin Crowell, Ph.D.

- **Date(s) of contribution(s):** January 2001
- **Nature of contribution:** Suggestions on improving technical accuracy of electric field and charge explanations in the first two chapters.
- **Contact at:** crowell01@lightandmatter.com

Dennis Crunkilton

- **Date(s) of contribution(s):** January 2006 to present
- **Nature of contribution:** Mini table of contents, all chapters except appedicies; html, latex, ps, pdf; See Devel/tutorial.html; 01/2006.
- DC network analysis ch, Mesh current section, Mesh current by inspection, new material.i DC network analysis ch, Node voltage method, new section.
- Ch3, Added AFCI paragraphs after GFCI, 10/09/2007.
- **Contact at:** liecibiblio(at)gmail.com

Tony R. Kuphaldt

- **Date(s) of contribution(s):** 1996 to present
- **Nature of contribution:** Original author.
- **Contact at:** liec0@lycos.com

Ron LaPlante

- **Date(s) of contribution(s):** October 1998
- **Nature of contribution:** Helped create the “table” concept for use in analysis of series and parallel circuits.

Davy Van Nieuwenborgh

- **Date(s) of contribution(s):** October 2006
- **Nature of contribution:** DC network analysis ch, Mesh current section, supplied solution to mesh problem, pointed out error in text.
- **Contact at:** Theoretical Computer Science laboratory, Department of Computer Science, Vrije Universiteit Brussel.
-

Ray A. Rayburn

- **Date(s) of contribution(s):** September 2009
- **Nature of contribution:** Nonapplicability of Maximum Power Transfer Theorem to Hi-Fi audio amplifier.
- **Contact at:** http://forum.allaboutcircuits.com/member.php?u=54720

Jason Starck

- **Date(s) of contribution(s):** June 2000
- **Nature of contribution:** HTML formatting, some error corrections.
- **Contact at:** jstarck@yhslug.tux.org

Warren Young

- **Date(s) of contribution(s):** August 2002
- **Nature of contribution:** Provided capacitor photographs for chapter 13.

Typo corrections and other "minor" contributions

- *The students of Bellingham Technical College's Instrumentation program*.
- **anonymous** (July 2007) Ch 1, remove :registers. Ch 5, s/figures something/figures is something/. Ch 6 s/The current/The current. (September 2007) Ch 5, 8, 9, 10, 11, 12, 13, 15. Numerous typos, clarifications.
- **Tony Armstrong** (January 2003) Suggested diagram correction in "Series and Parallel Combination Circuits" chapter.
- **James Boorn** (January 2001) Clarification on SPICE simulation.
- **Dejan Budimir** (January 2003) Clarification of Mesh Current method explanation.
- **Sridhar Chitta**, Assoc. Professor, Dept. of Instrumentation and Control Engg., Vignan Institute of Technology and Science, Deshmukhi Village, Pochampally Mandal, Nalgonda Distt, Andhra Pradesh, India (December 2005) Chapter 13: CAPACITORS, Clarification: s/note the direction of current/note the direction of electron current/, 2-places
- **Colin Creitz** (May 2007) Chapters: several, s/it's/its.
- **Larry Cramblett** (September 2004) Typographical error correction in "Nonlinear conduction" section.
- **Brad Drum** (May 2006) Error correction in "Superconductivity" section, Chapter 12: PHYSICS OF CONDUCTORS AND INSULATORS. Degrees are not used as a modifier with kelvin(s), 3 changes.
- **Jeff DeFreitas** (March 2006)Improve appearance: replace "/" and "/" Chapters: A1, A2. Type errors Chapter 3: /am injurious spark/an injurious spark/, /in the even/inthe event/
- **Sean Donner** (December 2004) Typographical error correction in "Voltage and current" section, Chapter 1: BASIC CONCEPTS OF ELECTRICITY,(by a the/ by the) (current of current/ of current). (January 2005), Typographical error correction in "Fuses" section, Chapter 12: THE PHYSICS OF CONDUCTORS AND INSULATORS (Neither fuses nor circuit breakers were not designed to open / Neither fuses nor circuit breakers were designed to open). (January 2005), Typographical error correction in "Factors Affecting Capacitance" section, Chapter 13: CAPACITORS, (greater plate area gives greater capacitance; less plate area gives less capacitance / greater plate area gives greater capacitance; less plate area gives less capacitance); "Factors Affecting Capacitance" section, (thin layer if insulation/thin layer of insulation). (January 2005), Typographical error correction in "Practical Considerations" section, Chapter 15: INDUCTORS, (there is not such thing / there is no such thing). (January 2005), Typographical error correction in "Voltage and current calculations" section, Chapter 16: RC AND L/R TIME CONSTANTS (voltage in current / voltage and current).
- **Manuel Duarte** (August 2006): Ch: DC Metering Circuits ammeter images: 00163.eps, 00164.eps; Ch: RC and L/R Time Constants, simplified ln() equation images 10263.eps, 10264.eps, 10266.eps, 10276.eps.
- **Aaron Forster** (February 2003) Typographical error correction in "Physics of Conductors and Insulators" chapter.
- **Bill Heath** (September-December 2002) Correction on illustration of atomic structure, and corrections of several typographical errors.
- **Stefan Kluehspies** (June 2003): Corrected spelling error in Andrew Tannenbaum's name.
- **David M. St. Pierre** (November 2007): Corrected spelling error in Andrew Tanenbaum's name (from the title page of his book).
- **Geoffrey Lessel**,Thompsons Station, TN (June 2005): Corrected typo error in Ch 1 "If this charge (static electricity) is stationary, and you won't realize–remove If; Ch 2 "Ohm's Law also make intuitive sense if you apply if to the water-and-pipe analogy." s/if/it; Chapter 2 "Ohm's Law is not very useful for analyzing the behavior of components like these where resistance is varies with voltage and current." remove "is"; Ch 3 "which halts fibrillation and and gives the heart a chance to recover." double "and"; Ch 3 "To be safest, you should follow this procedure is checking, using, and then checking your meter…. s/is/of.
- **LouTheBlueGuru**, allaboutcircuits.com, July 2005 Typographical errors, in Ch 6 "the current through R1 is half:" s/half/twice; "current through R1 is still exactly twice that of R2" s/R3/R2

- **Norm Meyrowitz** , nkm, allaboutcircuits.com, July 2005 Typographical errors, in Ch 2.3 “where we don’t know both voltage and resistance:” s/resistance/current
- **Don Stalkowski** (June 2002) Technical help with PostScript-to-PDF file format conversion.
- **Joseph Teichman** (June 2002) Suggestion and technical help regarding use of PNG images instead of JPEG.
- **Derek Terveer** (June 2006) Typographical errors, several in Ch 1,2,3.
- **Geoffrey Lessel** (June 2005) Typographical error, s/It discovered/It was discovered/ in Ch 1.
- **Austin@allaboutcircuits.com** (July 2007) Ch 2, units of mass, pound vs kilogram, near “units of pound” s/pound/kilogram/.
- **CATV@allaboutcircuits.com** (April 2007) Telephone ring voltage error, Ch 3.
- **line@allaboutcircuits.com** (June 2005) Typographical error correction in Volumes 1,2,3,5, various chapters ,(:s/visa-versa/vice versa/).
- **rob843@allaboutcircuits.com** (April 2007) Telephone ring voltage error, Ch 3.
- **bigtwenty@allaboutcircuits.com** (July 2007) Ch 4 near “different metric prefix”, s/right to left/left to right/.
- **jut@allaboutcircuits.com** (September 2007) Ch 13 near s/if were we to/if we were to/, s/a capacitors/a capacitor.
- **rxtxau@allaboutcircuits.com** (October 2007) Ch 3, suggested, GFCI terminology, non-US usage.
- **Stacy Mckenna Seip** (November 2007) Ch 3 s/on hand/one hand, Ch 4 s/weight/weigh, Ch 8 s/weight/weigh, s/left their/left there, Ch 9 s/cannot spare/cannot afford/, Ch1 Clarification, static electricity.
- **Cory Benjamin** (November 2007) Ch 3 s/on hand/one hand.
- **Larry Weber** (Feb 2008) Ch 3 s/on hand/one hand.
- **trunks14@allaboutrcircuits.com** (Feb 2008) Ch 15 s/of of/of .
- **Greg Herrington** (Feb 2008) Ch 1, Clarification: no neutron in hydrogen atom.
- **mark44** (Feb 2008) Ch 1, s/naturaly/naturally/
- **Unregistered@allaboutcircuits.com** (February 2008) Ch 1, s/smokelsee/smokeless , s/ecconomic/economic/ .
- **Timothy Unregistered@allaboutcircuits.com** (Feb 2008) Changed default roman font to newcent.
- **Imranullah Syed** (Feb 2008) Suggested centering of uncaptioned schematics.
- **davidr@insyst_ltd.com** (april 2008) Ch 5, s/results/result 2plcs.
- **Professor Thom@allaboutcircuits.com** (Oct 2008) Ch 6, s/g/c near Ecd and near 00435.png, 2plcs.
- **John Schwab** (Dec 2008) Ch 1, Static Electricity, near Charles Coulomb: rearrangement of text segments.
- **Olivier Derewonko** (Dec 2008) Ch 4 s/orientation a voltage/orientation of a/. Ch2 s/flow though/flow through/. Ch Safe meter usage, REVIEW, s/,/./ . Ch5, s/is it/it is/.
- **dor@allaboutcircuits.com** (June 2009) Ch 1, s/nusiance/nuisance.
- **rspuzio@allaboutcircuits.com** (September 2009) Ch 8, s/logarithmic/nonlinear , 6-plcs.
- **David Lewis@allaboutcircuits.com** (September 2009) Ch 1, hide paragraph: Physical dimension also impacts conductivity. . . etc.
- **Walter Odington@allaboutcircuits.com** (January 2010) Ch 3, s/hydration another/hydration is another/ .
- **tone_b@allaboutcircuits.com** (January 2010) Ch 6 , s/must were/were/ .
- **Unregistered Guest@allaboutcircuits.com** (July 2010) Ch 1 , s/is is/it is/ .
- **Unregistered Guest@allaboutcircuits.com** (July 2010) Ch 5 , added I2 to image 00090.png .
- **Unregistered Guest@allaboutcircuits.com** (August 2010) Ch 1 , s/was one the/was one of the/ .
- **D. Crunkilton** (June 2011) hi.latex, header file; updated link to openbookproject.net .
- **Bob Arthur** (Jan 2012) images: 00046.eps, 00047.eps,00048.eps 00362.eps, graph line visibility fixed.
- **vspriyan@allaboutcircuits.com** (Jan 2013) Ch 10, Near: voltages divided by their s/currents/resistances/ .
- **Eugene Smirnoff** (Jan 2013) Ch1, s/an hypothetical/a hypothetical/ . Ch 2 s/An historic/A historic/ .
- **Gulliveig@allaboutcircuits.com** (Jan 2014) Ch4, s/significant digits/mantissa, s/1000/999/ .
- **slidercrank@allaboutcircuits.com** (Feb 2014) Ch6, s/both positive/both be positive/ .

Index

C

cadmium cells
- 11.4: Special-purpose Batteries

circuit wiring
- 2.7: Circuit Wiring

cold junction
- 9.5: Thermocouples

conductors
- 1.2: Conductors, Insulators, and Electron Flow

current
- 1.4: Voltage and Current

E

electric circuits
- 1.3: What Are Electric Circuits?

F

fuse
- 12.4: Fuses

G

generator
- 9.4: Tachogenerators

H

Helipot
- 6.1: Voltage Divider Circuits

I

Induction
- 14.5: Electromagnetic Induction

insulators
- 1.2: Conductors, Insulators, and Electron Flow

J

Joule’s law
- 2.4: Calculating Electric Power

K

Kirchhoff’s Current Law
- 6.4: Kirchhoff’s Current Law (KCL)

Kirchhoff’s Voltage Law
- 6.2: Kirchhoff’s Voltage Law (KVL)

M

Millman’s Theorem
- 10.6: Millman’s Theorem

Mutual Inductance
- 14.6: Mutual Inductance

N

Nonlinear Conduction
- 2.6: Nonlinear Conduction

O

Ohm's Law
- 2: Ohm's Law

P

Permanent Magnets
- 14.1: Permanent Magnets

Permeability
- 14.4: Permeability and Saturation

Power
- 2.3: Power in Electric Circuits
- 2.4: Calculating Electric Power

power (electric)
- 2.4: Calculating Electric Power

R

resistance
- 1.5: Resistance

resistors
- 2.5: Resistors

S

Seebeck effect
- 9.5: Thermocouples

static electricity
- 1.1: Static Electricity

Superposition Theorem
- 10.7: Superposition Theorem

T

tachogenerator
- 9.4: Tachogenerators

tachometer
- 9.4: Tachogenerators

thermocouple
- 9.5: Thermocouples

Thevenin’s Theorem
- 10.8: Thevenin’s Theorem

V

voltage
- 1.4: Voltage and Current

Voltage Dividers
- 6.1: Voltage Divider Circuits

W

water level indicator (LI)
- 9.1: Analog and Digital Signals

Weston cells
- 11.4: Special-purpose Batteries

Glossary

Sample Word 1 | Sample Definition 1

Detailed Licensing

Overview

Title: Electric Circuits I - Direct Current (Kuphaldt)

Webpages: 148

All licenses found:

- Unknown License: 76.4% (113 pages)
- GNU Free Documentation License: 16.9% (25 pages)
- Undeclared: 6.8% (10 pages)
- Unknown License: 0% (0 page)
- Unknown License: 0% (0 page)
- Unknown License: 0% (0 page)
- Unknown License: 0% (0 page)
- Unknown License: 0% (0 page)
- Unknown License: 0% (0 page)
- Unknown License: 0% (0 page)
- Unknown License: 0% (0 page)
- Unknown License: 0% (0 page)
- Unknown License: 0% (0 page)
- Unknown License: 0% (0 page)
- Unknown License: 0% (0 page)
- Unknown License: 0% (0 page)
- Unknown License: 0% (0 page)
- Unknown License: 0% (0 page)
- Unknown License: 0% (0 page)
- Unknown License: 0% (0 page)
- Unknown License: 0% (0 page)
- Unknown License: 0% (0 page)
- Unknown License: 0% (0 page)
- Unknown License: 0% (0 page)
- Unknown License: 0% (0 page)
- Unknown License: 0% (0 page)
- Unknown License: 0% (0 page)
- Unknown License: 0% (0 page)
- Unknown License: 0% (0 page)
- Unknown License: 0% (0 page)
- Unknown License: 0% (0 page)
- Unknown License: 0% (0 page)
- Unknown License: 0% (0 page)
- Unknown License: 0% (0 page)
- Unknown License: 0% (0 page)
- Unknown License: 0% (0 page)
- Unknown License: 0% (0 page)
- Unknown License: 0% (0 page)
- Unknown License: 0% (0 page)
- Unknown License: 0% (0 page)

- Unknown License: 0% (0 page)
- Unknown License: 0% (0 page)
- Unknown License: 0% (0 page)
- Unknown License: 0% (0 page)
- Unknown License: 0% (0 page)
- Unknown License: 0% (0 page)
- Unknown License: 0% (0 page)
- Unknown License: 0% (0 page)
- Unknown License: 0% (0 page)
- Unknown License: 0% (0 page)
- Unknown License: 0% (0 page)
- Unknown License: 0% (0 page)
- Unknown License: 0% (0 page)
- Unknown License: 0% (0 page)
- Unknown License: 0% (0 page)
- Unknown License: 0% (0 page)
- Unknown License: 0% (0 page)
- Unknown License: 0% (0 page)
- Unknown License: 0% (0 page)
- Unknown License: 0% (0 page)
- Unknown License: 0% (0 page)
- Unknown License: 0% (0 page)
- Unknown License: 0% (0 page)
- Unknown License: 0% (0 page)
- Unknown License: 0% (0 page)
- Unknown License: 0% (0 page)
- Unknown License: 0% (0 page)
- Unknown License: 0% (0 page)
- Unknown License: 0% (0 page)
- Unknown License: 0% (0 page)
- Unknown License: 0% (0 page)
- Unknown License: 0% (0 page)
- Unknown License: 0% (0 page)
- Unknown License: 0% (0 page)
- Unknown License: 0% (0 page)
- Unknown License: 0% (0 page)
- Unknown License: 0% (0 page)
- Unknown License: 0% (0 page)
- Unknown License: 0% (0 page)
- Unknown License: 0% (0 page)
- Unknown License: 0% (0 page)
- Unknown License: 0% (0 page)
- Unknown License: 0% (0 page)
- Unknown License: 0% (0 page)
- Unknown License: 0% (0 page)
- Unknown License: 0% (0 page)
- Unknown License: 0% (0 page)
- Unknown License: 0% (0 page)
- Unknown License: 0% (0 page)
- Unknown License: 0% (0 page)
- Unknown License: 0% (0 page)
- Unknown License: 0% (0 page)
- Unknown License: 0% (0 page)

- Unknown License: 0% (0 page)
- Unknown License: 0% (0 page)
- Unknown License: 0% (0 page)
- Unknown License: 0% (0 page)
- Unknown License: 0% (0 page)
- Unknown License: 0% (0 page)
- Unknown License: 0% (0 page)
- Unknown License: 0% (0 page)
- Unknown License: 0% (0 page)
- Unknown License: 0% (0 page)
- Unknown License: 0% (0 page)
- Unknown License: 0% (0 page)
- Unknown License: 0% (0 page)
- Unknown License: 0% (0 page)
- Unknown License: 0% (0 page)
- Unknown License: 0% (0 page)
- Unknown License: 0% (0 page)
- Unknown License: 0% (0 page)
- Unknown License: 0% (0 page)
- Unknown License: 0% (0 page)
- Unknown License: 0% (0 page)
- Unknown License: 0% (0 page)

By Page

- Electric Circuits I - Direct Current (Kuphaldt) - *GNU Free Documentation License*
  - Front Matter - *GNU Free Documentation License*
    - TitlePage - *GNU Free Documentation License*
    - InfoPage - *GNU Free Documentation License*
    - Table of Contents - *Undeclared*
    - Licensing - *Undeclared*
  - 1: Basic Concepts of Electricity - *Unknown License*
    - 1.1: Static Electricity - *GNU Free Documentation License*
    - 1.2: Conductors, Insulators, and Electron Flow - *GNU Free Documentation License*
    - 1.3: What Are Electric Circuits? - *GNU Free Documentation License*
    - 1.4: Voltage and Current - *GNU Free Documentation License*
    - 1.5: Resistance - *GNU Free Documentation License*
    - 1.6: Voltage and Current in a Practical Circuit - *Unknown License*
    - 1.7: Conventional Versus Electron Flow - *Unknown License*
  - 2: Ohm's Law - *Unknown License*
    - 2.1: Ohm’s Law - How Voltage, Current, and Resistance Relate - *Unknown License*
    - 2.2: An Analogy for Ohm’s Law - *Unknown License*
    - 2.3: Power in Electric Circuits - *GNU Free Documentation License*
    - 2.4: Calculating Electric Power - *GNU Free Documentation License*
    - 2.5: Resistors - *Unknown License*
    - 2.6: Nonlinear Conduction - *Unknown License*
    - 2.7: Circuit Wiring - *GNU Free Documentation License*
    - 2.8: Polarity of voltage drops - *Unknown License*
    - 2.9: Computer Simulation of Electric Circuits - *GNU Free Documentation License*
  - 3: Electrical Safety - *Unknown License*
    - 3.1: The Importance of Electrical Safety - *Unknown License*
    - 3.2: Physiological Effects of Electricity - *Unknown License*
    - 3.3: Shock Current Path - *Unknown License*
    - 3.4: Ohm’s Law (again) - *GNU Free Documentation License*
    - 3.5: Safe Practices - *Unknown License*
    - 3.6: Emergency Response - *Unknown License*

- 3.7: Common Sources of Hazard - *Unknown License*
- 3.8: Safe Circuit Design - *Unknown License*
- 3.9: Safe Meter Usage - *Unknown License*
- 3.10: Electric Shock Data - *Unknown License*

- 4: Scientific Notation And Metric Prefixes - *Unknown License*
  - 4.1: Scientific Notation - *Unknown License*
  - 4.2: Arithmetic with Scientific Notation - *Unknown License*
  - 4.3: Metric Notation - *Unknown License*
  - 4.4: Metric Prefix Conversions - *Unknown License*
  - 4.5: Hand Calculator Use - *Unknown License*
  - 4.6: Scientific Notation in SPICE - *Unknown License*
- 5: Series And Parallel Circuits - *Unknown License*
  - 5.1: What are “Series” and “Parallel” Circuits? - *Unknown License*
  - 5.2: Simple Series Circuits - *Unknown License*
  - 5.3: Simple Parallel Circuits - *Unknown License*
  - 5.4: Conductance - *Unknown License*
  - 5.5: Power Calculations - *Unknown License*
  - 5.6: Correct use of Ohm’s Law - *Unknown License*
  - 5.7: Component Failure Analysis - *Unknown License*
  - 5.8: Building Simple Resistor Circuits - *Unknown License*
- 6: Divider Circuits and Kirchhoff's Laws - *Unknown License*
  - 6.1: Voltage Divider Circuits - *GNU Free Documentation License*
  - 6.2: Kirchhoff’s Voltage Law (KVL) - *GNU Free Documentation License*
  - 6.3: Current Divider Circuits and the Current Divider Formula - *Unknown License*
  - 6.4: Kirchhoff’s Current Law (KCL) - *Unknown License*
- 7: Series-parallel Combination Circuits - *Unknown License*
  - 7.1: What is a Series-Parallel Circuit? - *Unknown License*
  - 7.2: Analysis Techniques for Series Parallel Resistor Circuits - *Unknown License*
  - 7.3: Re-drawing Complex Schematics - *Unknown License*
  - 7.4: Component Failure Analysis (Continued) - *Unknown License*
  - 7.5: Building Series-Parallel Resistor Circuits - *Unknown License*
- 8: DC Metering Circuits - *Unknown License*
  - 8.1: What is a Meter? - *Unknown License*
  - 8.2: Voltmeter Design - *Unknown License*
  - 8.3: Voltmeter Impact on Measured Circuit - *Unknown License*
  - 8.4: Ammeter Design - *Unknown License*
  - 8.5: Ammeter Impact on Measured Circuit - *Unknown License*
  - 8.6: Ohmmeter Design - *Unknown License*
  - 8.7: High Voltage Ohmmeters - *Unknown License*
  - 8.8: Multimeters - *Unknown License*
  - 8.9: Kelvin (4-wire) Resistance Measurement - *Unknown License*
  - 8.10: Bridge Circuits - *Unknown License*
  - 8.11: Wattmeter Design - *Unknown License*
  - 8.12: Creating Custom Calibration Resistances - *Unknown License*
- 9: Electrical Instrumentation Signals - *Unknown License*
  - 9.1: Analog and Digital Signals - *GNU Free Documentation License*
  - 9.2: Voltage Signal Systems - *Unknown License*
  - 9.3: Current Signal Systems - *Unknown License*
  - 9.4: Tachogenerators - *GNU Free Documentation License*
  - 9.5: Thermocouples - *GNU Free Documentation License*
  - 9.6: pH Measurement - *Unknown License*
  - 9.7: Strain Gauges - *Unknown License*
- 10: DC Network Analysis - *Unknown License*
  - 10.1: What is Network Analysis? - *Undeclared*
  - 10.2: Branch Current Method - *Unknown License*
  - 10.3: Mesh Current Method and Analysis - *Unknown License*
  - 10.4: Node Voltage Method - *Unknown License*
  - 10.5: Introduction to Network Theorems - *Unknown License*
  - 10.6: Millman’s Theorem - *Unknown License*
  - 10.7: Superposition Theorem - *GNU Free Documentation License*
  - 10.8: Thevenin’s Theorem - *GNU Free Documentation License*
  - 10.9: Norton’s Theorem - *Unknown License*
  - 10.10: Thevenin-Norton Equivalencies - *Unknown License*
  - 10.11: Millman’s Theorem Revisited - *Unknown License*
  - 10.12: Maximum Power Transfer Theorem - *Unknown License*
  - 10.13: Δ-Y and Y-Δ Conversions - *Unknown License*
- 11: Batteries And Power Systems - *Unknown License*

- 11.1: Electron Activity in Chemical Reactions - *Unknown License*
- 11.2: Battery Construction - *Unknown License*
- 11.3: Battery Ratings - *Unknown License*
- 11.4: Special-purpose Batteries - *GNU Free Documentation License*
- 11.5: Practical Considerations - Batteries - *Unknown License*

- 12: Physics of Conductors and Insulators - *Unknown License*
  - 12.1: 12.1 Introduction to Conductance and Conductors - *Unknown License*
  - 12.2: Conductor Size - *Unknown License*
  - 12.3: Conductor Ampacity - *Unknown License*
  - 12.4: Fuses - *GNU Free Documentation License*
  - 12.5: Specific Resistance - *Unknown License*
  - 12.6: Temperature Coefficient of Resistance - *Unknown License*
  - 12.7: Superconductivity - *Unknown License*
  - 12.8: Insulator Breakdown Voltage - *Unknown License*
- 13: Capacitors - *Unknown License*
  - 13.1: Electric Fields and Capacitance - *Unknown License*
  - 13.2: Capacitors and Calculus - *Unknown License*
  - 13.3: Factors Affecting Capacitance - *Unknown License*
  - 13.4: Series and Parallel Capacitors - *Unknown License*
  - 13.5: Practical Considerations - Capacitors - *Unknown License*
- 14: Magnetism and Electromagnetism - *Unknown License*
  - 14.1: Permanent Magnets - *Unknown License*
  - 14.2: Electromagnetism - *GNU Free Documentation License*
  - 14.3: Magnetic Units of Measurement - *Unknown License*
  - 14.4: Permeability and Saturation - *Unknown License*
  - 14.5: Electromagnetic Induction - *Unknown License*
  - 14.6: Mutual Inductance - *Unknown License*
- 15: Inductors - *Unknown License*
  - 15.1: Magnetic Fields and Inductance - *Unknown License*
  - 15.2: Inductors and Calculus - *Unknown License*
  - 15.3: Factors Affecting Inductance - *Unknown License*
  - 15.4: Series and Parallel Inductors - *Unknown License*
  - 15.5: Practical Considerations - Inductors - *Unknown License*
- 16: RC and L - *Undeclared*
  - 16: RC and L/R Time Constants - *Unknown License*
    - 16.1: Electrical Transients - *Unknown License*
    - 16.2: Capacitor Transient Response - *Unknown License*
    - 16.3: Inductor Transient Response - *Unknown License*
    - 16.4: Voltage and Current Calculations - *Unknown License*
    - 16.05: Why L - *Undeclared*
      - 16.5: Why L/R and not LR? - *Undeclared*
    - 16.6: Complex Voltage and Current Calculations - *Unknown License*
    - 16.7: Complex Circuits - *Unknown License*
    - 16.8: Solving for Unknown Time - *Unknown License*
- Back Matter - *GNU Free Documentation License*
  - Index - *Undeclared*
  - Credits - *Unknown License*
  - Index - *Undeclared*
  - Glossary - *Undeclared*
  - Detailed Licensing - *Undeclared*