TECHNICAL SKETCHING

Justin Lemke
Northeast Wisconsin Technical College

LibreTexts™

Technical Sketching (NWTC)

This text is disseminated via the Open Education Resource (OER) LibreTexts Project (https://LibreTexts.org) and like the thousands of other texts available within this powerful platform, it is freely available for reading, printing, and "consuming."

The LibreTexts mission is to bring together students, faculty, and scholars in a collaborative effort to provide an accessible, and comprehensive platform that empowers our community to develop, curate, adapt, and adopt openly licensed resources and technologies; through these efforts we can reduce the financial burden born from traditional educational resource costs, ensuring education is more accessible for students and communities worldwide.

Most, but not all, pages in the library have licenses that may allow individuals to make changes, save, and print this book. Carefully consult the applicable license(s) before pursuing such effects. Instructors can adopt existing LibreTexts texts or Remix them to quickly build course-specific resources to meet the needs of their students. Unlike traditional textbooks, LibreTexts' web based origins allow powerful integration of advanced features and new technologies to support learning.

LibreTexts is the adaptable, user-friendly non-profit open education resource platform that educators trust for creating, customizing, and sharing accessible, interactive textbooks, adaptive homework, and ancillary materials. We collaborate with individuals and organizations to champion open education initiatives, support institutional publishing programs, drive curriculum development projects, and more.

The LibreTexts libraries are Powered by NICE CXone Expert and was supported by the Department of Education Open Textbook Pilot Project, the California Education Learning Lab, the UC Davis Office of the Provost, the UC Davis Library, the California State University Affordable Learning Solutions Program, and Merlot. This material is based upon work supported by the National Science Foundation under Grant No. 1246120, 1525057, and 1413739.

Any opinions, findings, and conclusions or recommendations expressed in this material are those of the author(s) and do not necessarily reflect the views of the National Science Foundation nor the US Department of Education.

Have questions or comments? For information about adoptions or adaptions contact info@LibreTexts.org or visit our main website at https://LibreTexts.org.

This text was compiled on 04/23/2026

TABLE OF CONTENTS

Licensing

1: Introduction to Blueprints and Technical Sketches

- 1.1: Introduction
- 1.2: Types drawings
  - 1.2.1: Self Test
- 1.3: Describe the drafting tools and materials used in drawing plans
  - 1.3.1: Tools
  - 1.3.2: Drafting Materials
  - 1.3.3: Self Test 1

2: Introduction to Drawing Layout

- 2.1: Basic layout of a drawing

3: Lines Styles and Types

- 3.1: Line styles and types
- 3.2: The Meaning of Lines

4: Sketching

- 4.1: Sketching Technique

5: Isometric Drawings

- 5.1: Make isometric sketches of simple rectangular objects
- 5.2: Sketching Figures with Non-isometric Lines
- 5.3: Make Isometric Sketches

6: Orthographic Projection

- 6.1: Visualization of Orthographics Projections
- 6.2: Auxiliary Views
- 6.3: Sectional Views
- 6.4: Make orthographic sketches
- 6.5: Make an orthographic three-view, fully dimensioned sketch of a simple object

7: Dimensioning

- 7.1: Scaling
- 7.2: Principles of Dimensioning
- 7.3: Dimensioning
- 7.4: Dimensioning Exercise

Index

Glossary

Detailed Licensing

Detailed Licensing

Licensing

*A detailed breakdown of this resource's licensing can be found in **Back Matter/Detailed Licensing**.*

CHAPTER OVERVIEW

1: Introduction to Blueprints and Technical Sketches

1.1: Introduction

1.2: Types drawings

1.2.1: Self Test

1.3: Describe the drafting tools and materials used in drawing plans

1.3.1: Tools

1.3.2: Drafting Materials

1.3.3: Self Test 1

1: Introduction to Blueprints and Technical Sketches is shared under a CC BY 4.0 license and was authored, remixed, and/or curated by LibreTexts.

1.1: Introduction

What are Blueprints?

Blueprints (prints) are copies of mechanical or other types of technical drawings. The term blueprint reading means interpreting ideas expressed by others on drawings, whether or not the drawings are actually blueprints. Drawing or sketching is the universal language engineers, technicians, and skilled craftsmen use. Drawings need to convey all the necessary information to the person who will make or assemble the object in the drawing. Blueprints show the construction details of parts, machines, ships, aircraft, buildings, bridges, roads, etc.

Why is it essential to be able to create Technical Sketches

Making quick, accurate sketches is a valuable advantage that helps convey technical information or ideas to others. A sketch may be of an object, an idea of something you are thinking about, or a combination. Most of us think of a sketch as a freehand drawing, which is not always true. You may sketch on graph paper to take advantage of the lined squares, or you may sketch on plain paper with or without the help of drawing aids.

There is no standard for technical sketching. Technical Sketches borrow many technics from Professional Drafting, but it is not drafting. You may draw pictorial sketches that look like the object or make an orthographic sketch showing different views, which we will cover in the following chapters.

1.1: Introduction is shared under a CC BY 4.0 license and was authored, remixed, and/or curated by LibreTexts.

1.2: Types drawings

Drawings are made according to a set of conventions, which include particular views (floor plan, section, etc.), sheet sizes, units of measurement and scales, annotation, and cross-referencing.

The two main types of views (or “projections”) used in drawings are:

- Pictorial
- Orthographic
  - Building Plans

Pictorial views

Pictorial views show a 3-D view of how something should look when completed. There are three types of pictorial views:

- Perspective
- Isometric
- Oblique

Perspective view

Perspective is the most realistic form of drawing. Artists use one-point perspective, two-point (shown here), and three-point to create visual depth. Perspectives are used by architects and for industrial pictorials of plan layouts, machinery, and other subjects where realism is required.

A perspective view presents a building or an object just as it would look to you. A perspective view has a vanishing point; that is, lines that move away from you come together in the distance. For example, in Figure 1.2.1, we see a road and a line of telephone poles. Even though the poles get smaller in their actual measurement, we recognize them as being the same size but more distant.

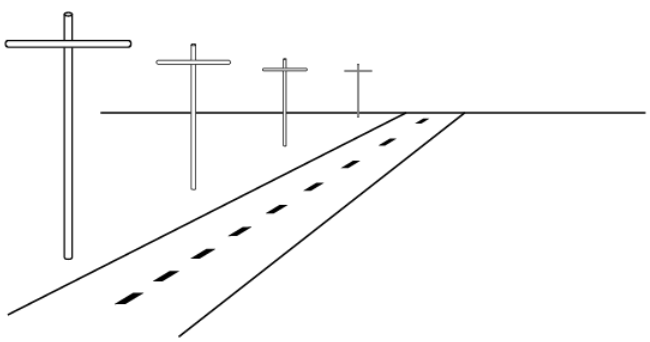

Figure 1.2.1: Perspective

Isometric

An isometric view is a three-dimensional view. The plumb lines are vertical, and the horizontal lines are set at 30-degree angles from a line parallel to the bottom of the page. Isometric views have no vanishing point, so the objects do not appear as they would in a perspective view. Lengths are exact on isometric drawings only when the item is parallel to one of the axes of the drawing. Figure 1.2.2 shows an isometric view of a simple object, as well as the lines that represent the three dimensions.

These are the most used type of drawings in the piping industry and take a good deal of practice to fully understand how to draw. They best represent what is being built and what it will look like from the different sides with one drawing.

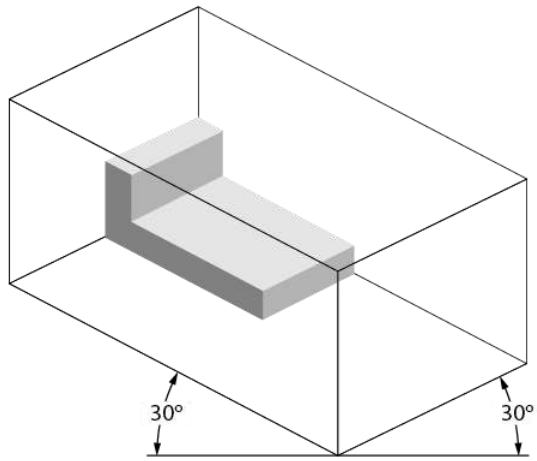

Figure 1.2.2: An isometric view

Oblique

An oblique view is similar to an isometric view, except that the face or front view is drawn to an exact scale. The diagonal lines are extended at a 30- to 45-degree angle to create a three-dimensional representation (Figure 1.2.3). The angled lines can then either be to an exact scale (Cavalier Oblique) or 1/2 scale (Cabinet Oblique).

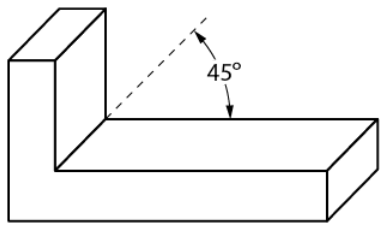

Figure 1.2.3: An oblique view of the object in Figure 2 (Copyright; author via source)

Orthographic (Multi-view) Projections

Pictorial drawings are excellent for presenting easy-to-visualize pictures to the viewer, but there are some problems. The main problem is that pictorial drawings cannot be accurately drawn to scale. Also, they cannot accurately duplicate exact shapes and angles. As this information can be essential, another form of drawing is used, one that has several names, including orthographic projection, third angle projection, multi-view projection, and working drawing. Each projection is a view that shows only one face of an object, such as the front, side, top, or back. These views are not pictorial.

To interpret or read these drawings you must first understand how the views in a multi-view drawing are developed and how each view relates to the other views. The best way to understand the principle of orthographic views is to suspend the object you wish to draw inside an imaginary glass box. If you were to look at the object through each side of the box and draw onto the glass the view of the object you see through the glass, you would end up with a sketch similar to that shown in Figure 1.2.4.

The view through each side of the glass box shows only the end view of one side of the object. All lines are straight and parallel because the original object has sides that are straight and parallel. Each view represents what you see when you look directly at the object.

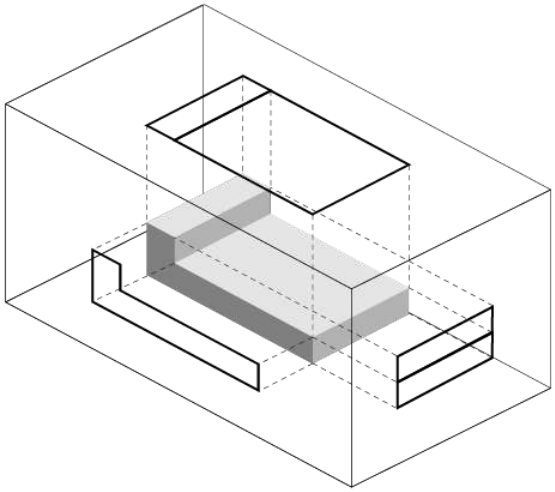

Figure 1.2.4: Orthographic projection (Multi-view) through a glass box of the object in Figure 2

If you were to open up the glass box, as shown in Figure 1.2.5, each view would be in the correct position for a third angle orthographic drawing. Each view is given a name that reflects its position in relation to the other views.

Third angle projections are what are commonly used in North America, while first angle is often used in Europe as the object is "viewed" from the center out.

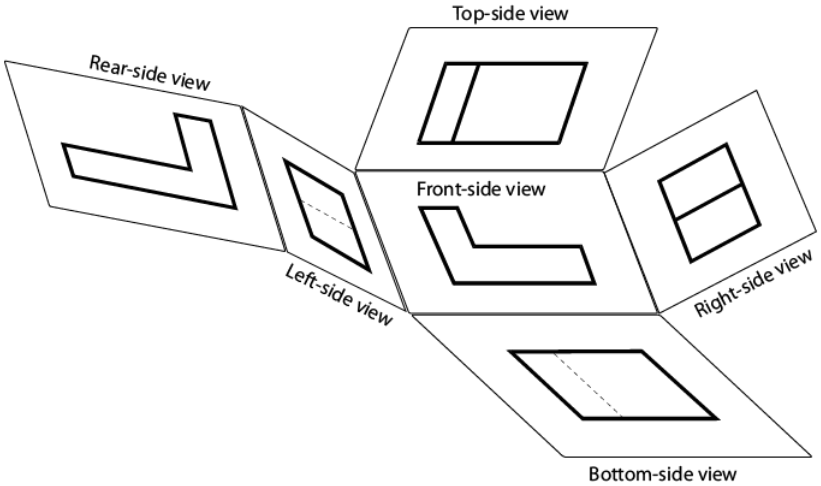

Figure 1.2.5: Glass box opening to produce orthographic views

When the imaginary glass box is flattened as shown in Figure 1.2.6, you can see that each view is in line with the adjacent view. Then the edges of the box are removed and you have a six-view orthographic drawing of the original object (Figure 1.2.7). These six views are called the six principal orthographic views. This view alignment is important and is always consistent in orthographic projection. You will seldom need to show views of all six sides of an object. Usually, it is sufficient to show three; top, front, and right side. While simpler objects like bars could possibly be shown in two, or a ball only in one. You should remember the names of these six views and understand how they are obtained in case you ever need to show an object that cannot be truly represented in two or three views.

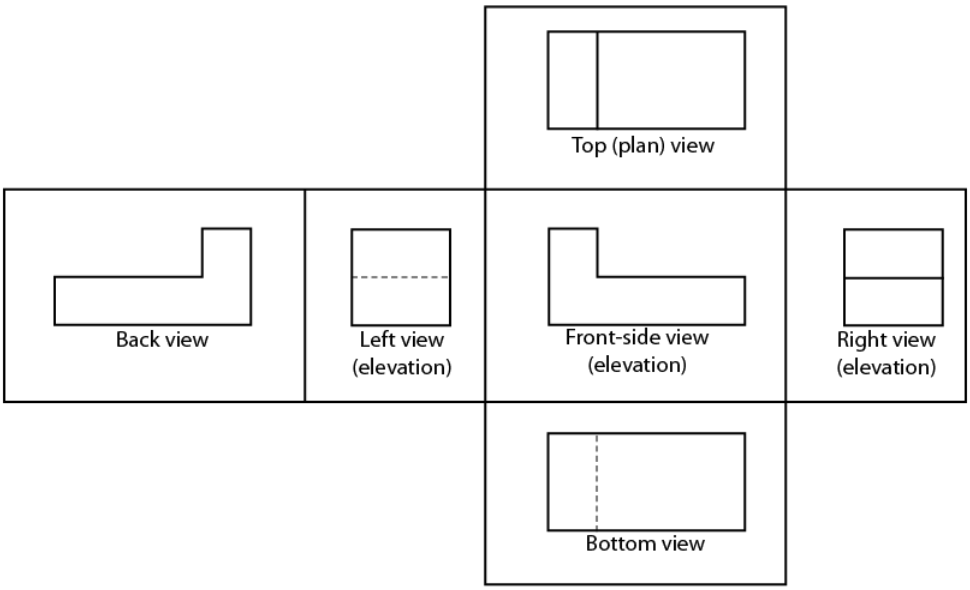

Figure 1.2.6: Drawing with the glass box flattened out

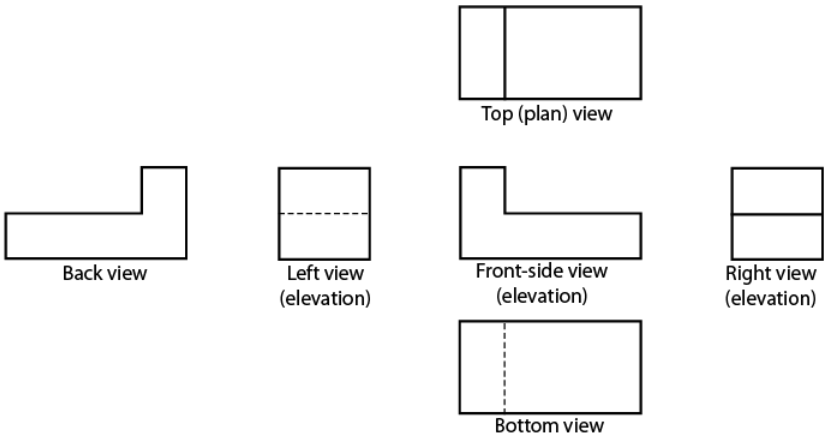

Figure 1.2.7: Orthographic views of the object in Figure 1.2.2

Building Plans

A floor plan (or floor drawing) is an orthographic plan view (or top view) looking down on the various floor levels. Floor plans are one of the most important drawings for construction, as they provide the most information about the building. Floor plans identify rooms by name or number.

They give the:

- room dimensions
- overall dimensions
- doorways
- windows
- plumbing fixtures
- equipment
- location of structural members and walls Figure 8 shows the floor plan for the main floor of a house.

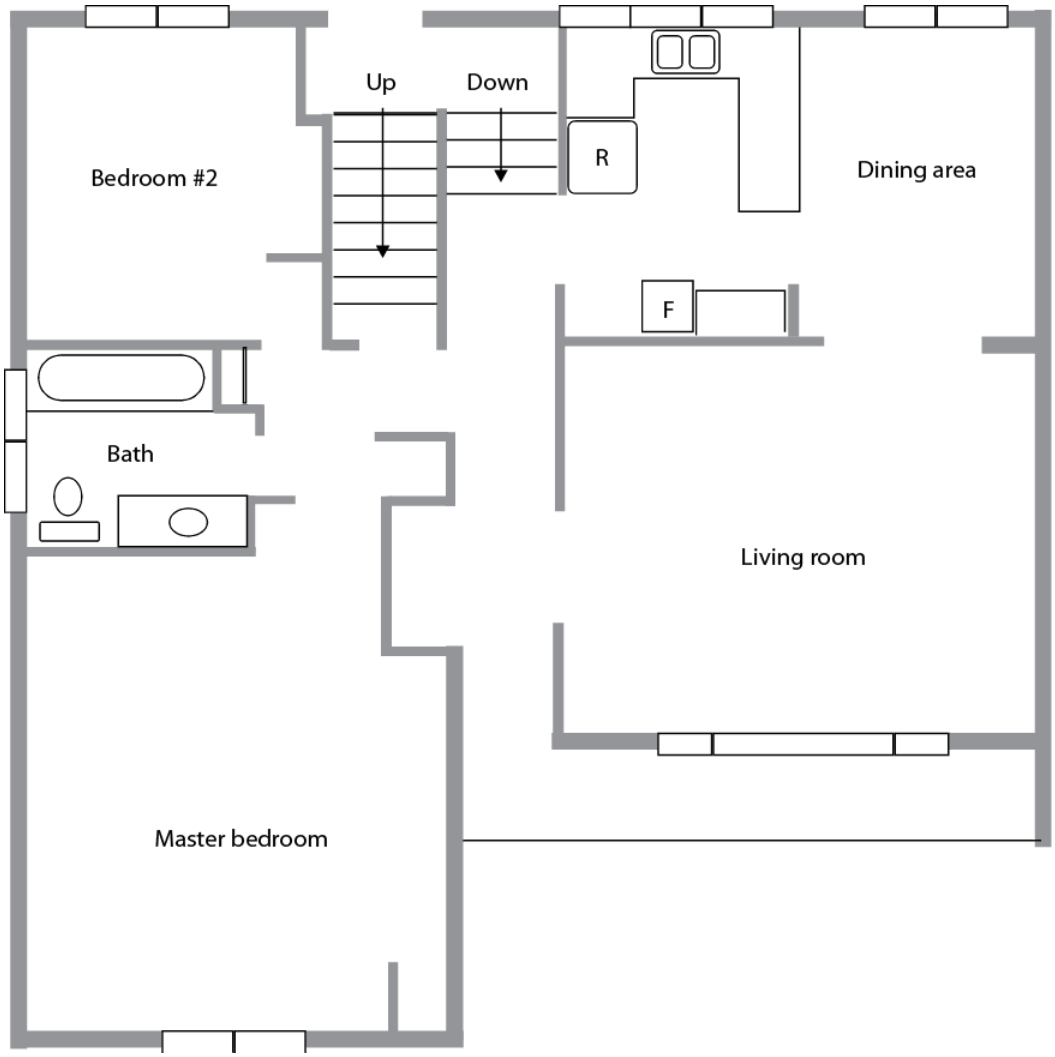

Figure 1.2.8: Main floor plan of a house

Elevation drawings

An elevation drawing (called an elevation) is a view of any vertical surface and is taken from the floor plans (Figure 1.2.9). Normally, elevation drawings include the front, back, and side orthographic projections of the buildings. The elevation drawings show what the exterior of the building will look like when it is finished. The drawings show the finished grade line, the finish materials, and the door and the window locations. Elevation drawings may also show interior walls that have special features, such as fireplaces or kitchen cabinets.

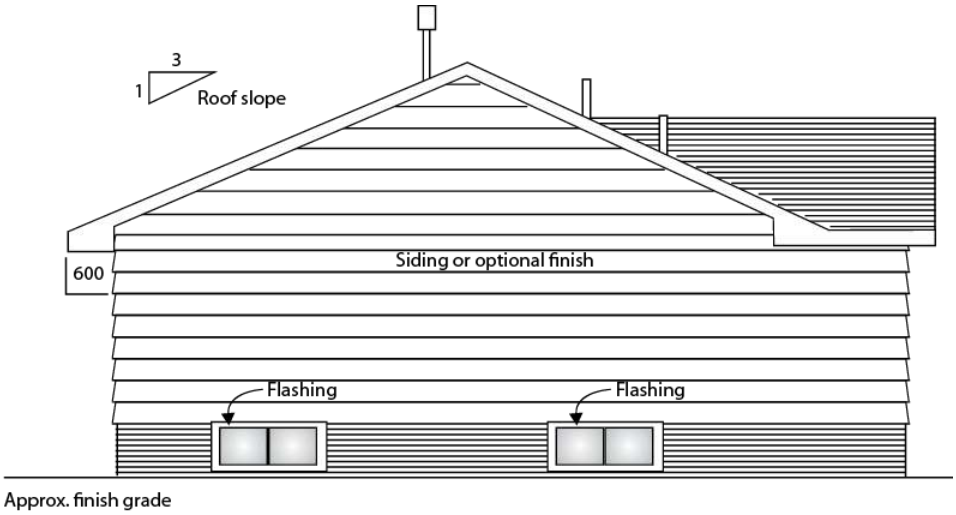

Figure 1.2.9: Left elevation of house in Figure 1.2.8

Section plan

Section drawings (called sections) provide detailed drawings of the cross-section of a building or wall unit (Figure 1.2.10). The scale of these drawings is large (about 1:20), which allows different structural members to be drawn so that the construction details are seen clearly.

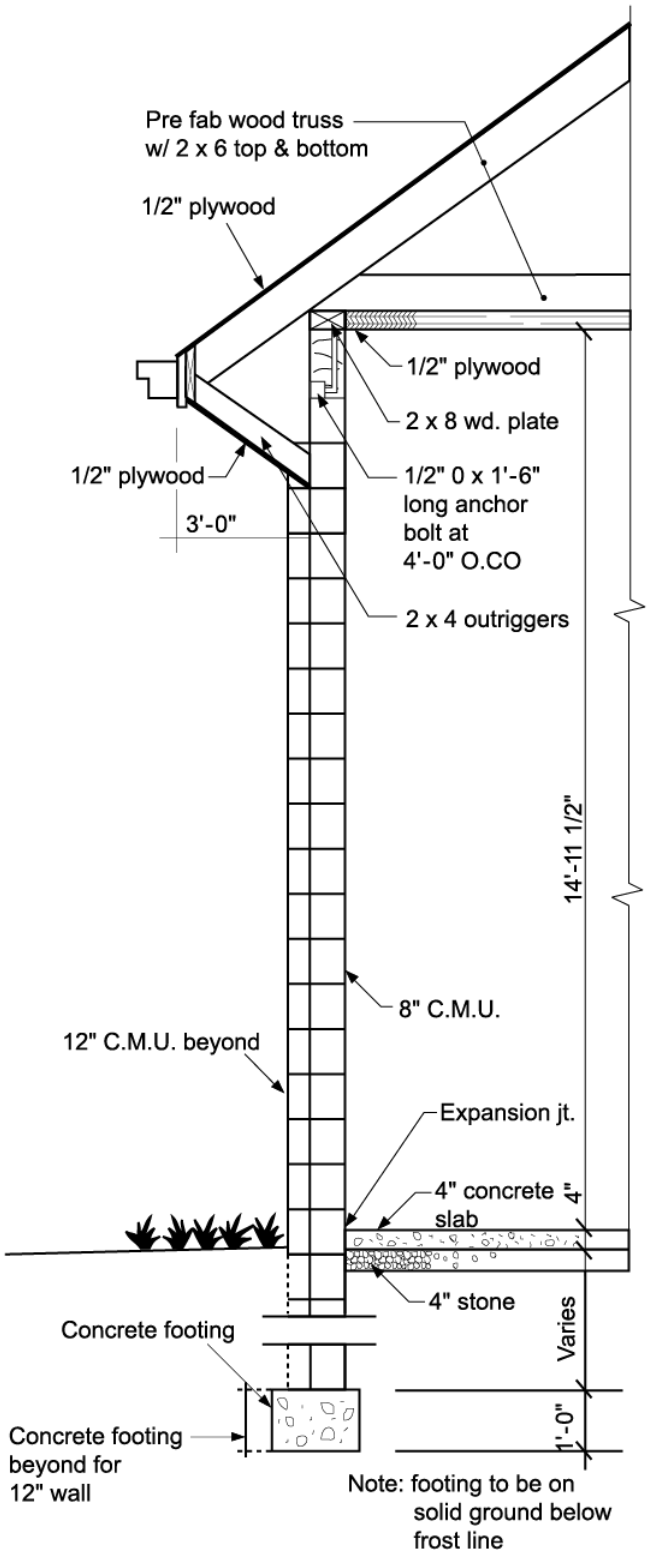

Figure 1.2.10: Section A-A

Sectional views give information about wall construction and exterior and interior wall finish. To avoid any confusion, the precise location or cut of a sectional view is given in another drawing, such as a detailed drawing or a floor plan. For example, the reference in the lower left-hand corner of Figure 1.2.11 shows the location of the section in Figure 1.2.10. The line drawn through the wall indicates the point and span of the cut and the arrows indicate the direction of view.

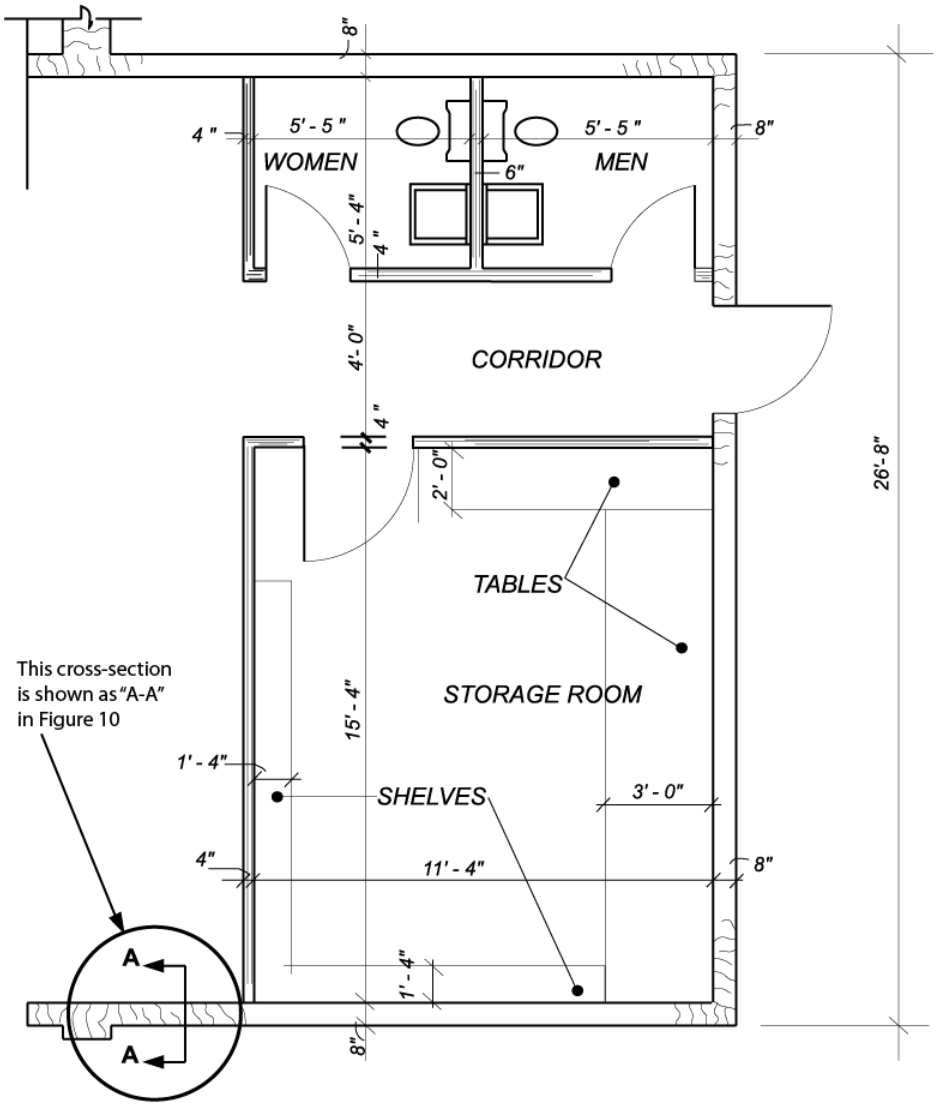

Figure 1.2.11: —Section A-A Callout

Measurements on orthographic drawings

To get all of the measurements required, you will typically need to refer to more than one view. For example, you cannot take elevation measurements from a plan view.

1.2: Types drawings is shared under a CC BY 4.0 license and was authored, remixed, and/or curated by LibreTexts.

- **4.1: Types of views used in drawings** is licensed CC BY 4.0.

1.2.1: Self Test

Self-Test 4

1. A perspective drawing is one form of which type of view?
    1. Oblique
    2. Pictorial
    3. Isometric
    4. Orthographic
2. At what angle should isometric drawings have horizontal lines drawn?
    1. 15°
    2. 30°
    3. 45°
    4. 60°
3. What do perspective drawings always have?
    1. Scale
    2. Dimensions
    3. Hidden lines
    4. Vanishing points
4. At what angles should oblique drawings have lines drawn?
    1. 0°–15°
    2. 15°–30°
    3. 30°–45°
    4. 45°–60°
5. Orthographic projection drawings are three-dimensional drawings.
    1. True
    2. False
6. What is a common name for a top view in an orthographic drawing?
    1. Plan view
    2. Down view
    3. Ceiling view
    4. Elevation view
7. In orthographic projection, how many views are most commonly shown?
    1. 1
    2. 2
    3. 3
    4. 4
8. In the diagrams below, match letters A to L with numbers 1 to 12.

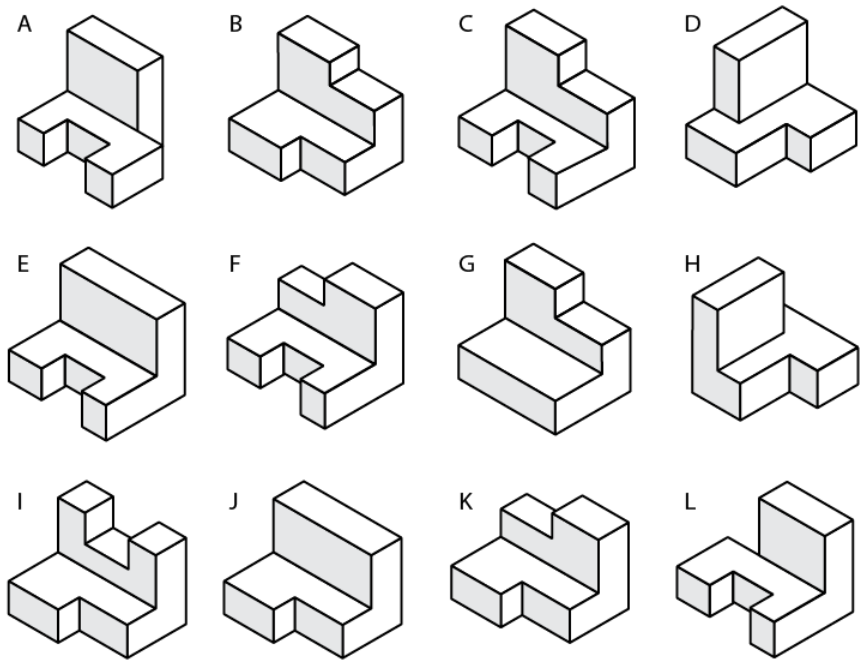

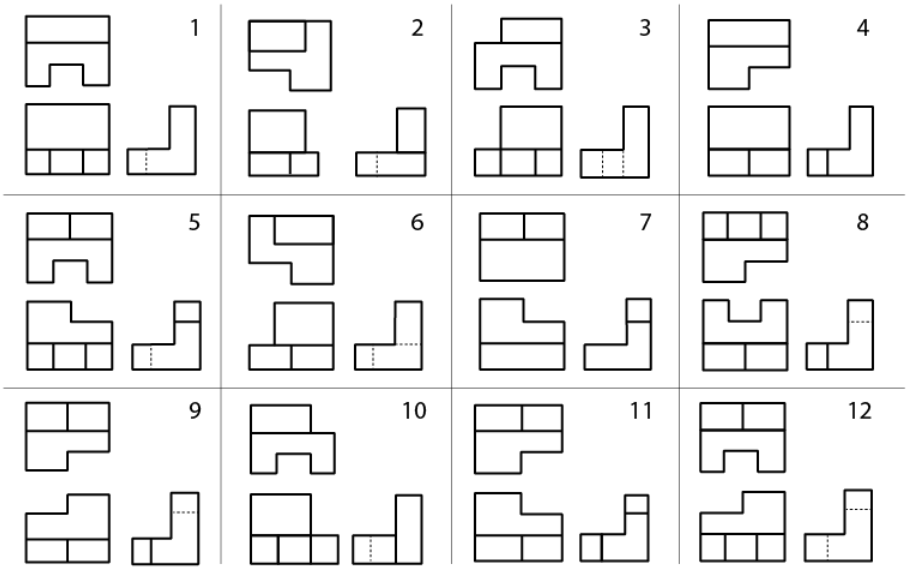

9. What is a top view called in a construction drawing?
    1. Plan view
    2. Floor plan
    3. Floor detail
    4. Building plan
10. What are drawings called that show door and window locations, and other exterior finishes of a building?
    1. Wall drawings
    2. Front drawings
    3. Exterior drawings
    4. Elevation drawings

1.2.1: Self Test is shared under a CC BY 4.0 license and was authored, remixed, and/or curated by LibreTexts.

- **4.E: Self Test 4** is licensed CC BY 4.0.

SECTION OVERVIEW

1.3: Describe the drafting tools and materials used in drawing plans

Traditionally, drafters sat at drafting boards and used pencils, pens, compasses, protractors, triangles, and other drafting devices to prepare a drawing manually. Today, however, most professional drafters use computer-aided drafting (CAD) systems to prepare drawings. Although drafters use CAD extensively, it is only a tool. Drafters and tradespersons still need knowledge of traditional drafting tools and techniques. Being able to use these techniques will allow the tradesperson to communicate effectively with others.

1.3.1: Tools

1.3.2: Drafting Materials

1.3.3: Self Test 1

1.3: Describe the drafting tools and materials used in drawing plans is shared under a CC BY 4.0 license and was authored, remixed, and/or curated by LibreTexts.

1.3.1: Tools

Drafting tools are needed to lay out the different shapes and lines used to create drawings and sketches. Basic knowledge of the available tools and how to use them will assist you in your drawing.

Drafting board or table

The drafting board is an essential tool. Paper will be attached and kept straight and still, so the surface of the drafting board must be smooth and true, with no warps or twists. The surfaces of most drafting boards are covered with vinyl because it is smooth and even.

The drafting board or table should have two parallel outside working edges made of either hardwood or steel.

Most drafting table tops can be set at different heights from the floor and at any angle from vertical to horizontal. Other drafting tables may not have the same adjustments and may be limited to being raised only from horizontal to a low slope.

To reduce back strain, use an adjustable drafting stool when working at a drafting table. Tables or boards should be a minimum of 1.2 m (4') in width and 0.9 m (3') in height.

T-square

The fixed head T-square is used for most work. It should be made of durable materials and have a transparent edge on the blade. To do accurate work, the blade must be perfectly square and straight, which should be checked regularly.

The T-square is used to draw horizontal lines and align other drawing instruments. If you are right-handed, you hold it tight against the left edge of the drawing board and move it up and down as required. When you make close adjustments, your fingers should be on top of the square, and you should use your thumb to control the T-square's movement, Figure **1.3.1.1**.

Figure **1.3.1.1**: A person using a T-square

When drawing horizontal lines, incline your pencil in the direction you are drawing the line. Hold the pencil point as close as possible to the blade. Roll the pencil between your fingers to prevent the point from becoming flat on one side.

Triangle

A triangle (set-square) is made of clear plastic. Some triangles have rabbeted edges (Figure **1.3.1.2**) so that when you draw lines, the corner of the edge is set away from the paper to help prevent smudges and ink blotches.

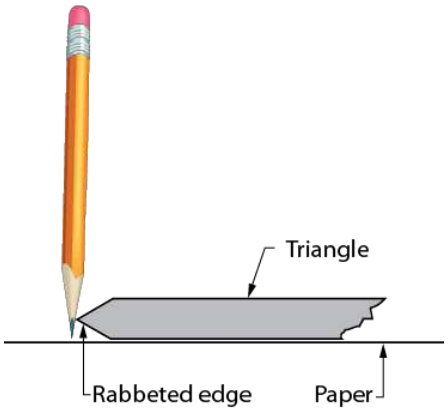

Figure 1.3.1.2: Hold a pencil vertical against the rabbeted edge

Triangles are available in 45°-90°-45° or 30°-60°-90° combinations. For most work, triangles should be about 200 mm to 250 mm (8” to 10”) long. Triangles should be stored flat to prevent warping and not stored underneath other objects to prevent any pressure from causing them to deform.

Check a triangle for accuracy by drawing a perpendicular line, then reversing the triangle and drawing another perpendicular line (Figure 1.3.1.3).

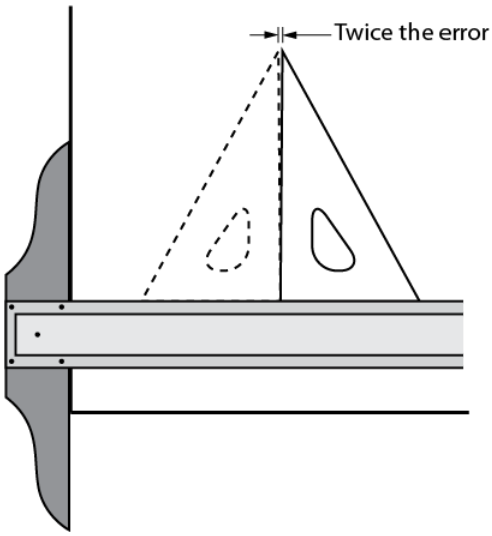

Figure 1.3.1.3: Testing a triangle

Triangles are used to draw vertical lines and other lines at set angles. Rest the triangle on the T-square blade and slide it along the blade to the desired location. Draw the full length of the vertical line in one pass if possible. Hold the blades of the T-square and the triangle together to prevent movement when you are drawing, and hold the pencil point as close as possible to the triangle. You can also draw 15° and 75° angles by using both a 45°-90°-45° and a 30°-60°-90° in combination. Figure 1.3.1.4 shows how triangles are placed to draw angles that are every multiple of 15°.

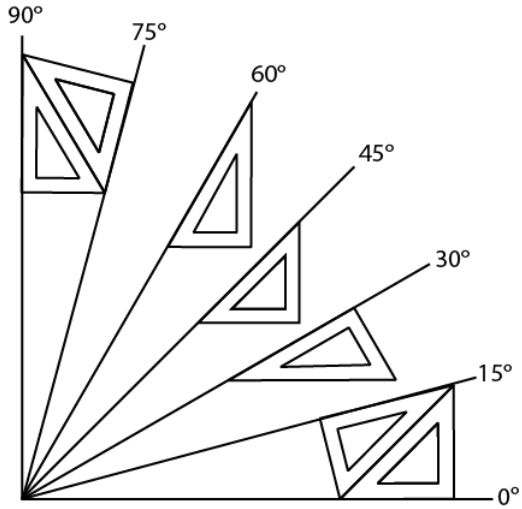

Figure 1.3.1.4: How to create the most common angles with triangles

Protractor

A protractor, Figure 1.3.1.5, is an instrument used to measure angles. It is typically made of transparent plastic or glass. Protractors can be used for checking and transferring angles to and from a drawing sheet.

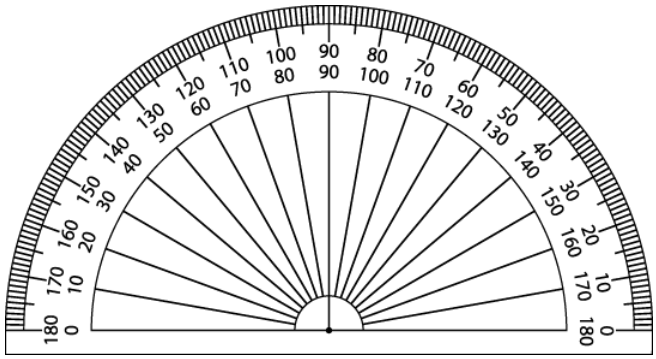

Figure 1.3.1.5: Protractor

Drafting machine

A drafting machine (Figure 1.3.1.6) is a device that is mounted to the drawing board. The drafting machine replaces the T-square and triangles, as it has rulers with angles that can be precisely adjusted with a controlling mechanism. A drafting machine allows easy drawing of parallel lines over the paper. The adjustable angle between the rulers allows the lines to be drawn at various accurate angles. The rulers are replaceable and can be replaced with scale rulers. Rulers may also be used as a support for separate special rulers and letter templates.

Figure 1.3.1.6: Drafting machine

Drawing pencils

Both wood and mechanical pencils are used for drafting (Figure 1.3.1.7). Manufacturers grade drawing pencils using numbers and letters. These range from 6B (very soft and black) to 9H (the hardest). From 6B, the pencils progress through 5B, 4B, 3B, 2B, B, and HB, and then to F, the medium grade. After that, they move to the harder graphite: H, 2H, 3H, 4H, 5H, 6H, 7H, 8H, and finally 9H. The softer grades are used for sketching and rendering drawings. The harder grades are used for instrument drawings. Mechanical pencils do not require sharpening and are made to hold leads (they are actually made of graphite) that are bought separately. Thin-lead mechanical pencils, with leads as small as 0.5 mm, are available in different grades of lead. Most draftspersons use four or five different mechanical pencils with a different lead in each. The pencils come in different colors, so it is easy to track which lead is in each.

Figure 1.3.1.7: Wood and mechanical pencils

Erasers and erasing shields

The best eraser to use on drawings is either a soft pink eraser with beveled ends or a white plastic eraser. Electric rotary erasers are also available. They permit easy erasure of small errors without erasing adjacent lines. A metal erasing shield helps to confine erasures to the desired area. Erasing shields are made from very thin stainless steel and have holes of various shapes to accommodate the sections to be erased. Figure 1.3.1.8 shows two erasers and an erasing shield.

Figure 1.3.1.8: Erasers and erasing shields

Templates

Templates (Figure 1.3.1.9) are available for many different trades. Templates incorporate cut-outs of symbols and fixtures commonly used in that trade. These cut-outs make it easy to trace shapes onto drawing paper.

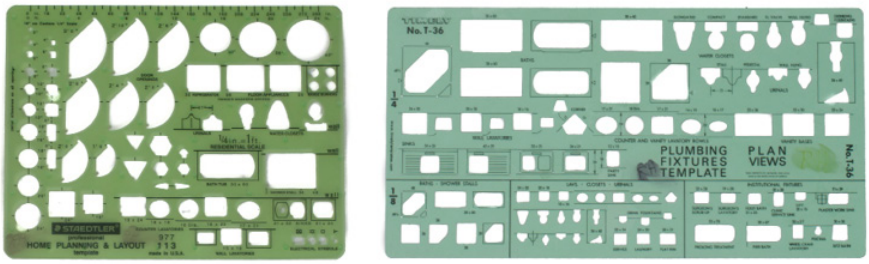

Figure 1.3.1.9: Templates

French curves and splines

A French curve (1.3.1.10) is a plastic template designed to help you draw curves. The French curve contains many different curves, but each is represented over a very short distance only. One radius of the curve blends into another radius. It takes a lot of practice to use French curves effectively.

Figure 1.3.1.10: French Curve

A spline or flexible curve (Figure 11) can be used instead of a French curve to draw most curves. A spline is a plastic or rubber rod that is reinforced with metal. To use a spline, bend it to the shape of the curve you need. The design of the spline lets you hold a pencil against an edge and draw an accurate line without smudging. A spline cannot be used to draw curves with a very short radius because the spline will not bend tightly.

Figure 1.3.1.11: Spline

Compass

A compass can be used for drawing circles, bisecting lines, or dividing angles. For very large circles, you can use a beam compass. The four types of compasses are shown in Figure 1.3.1.12 — Figure 1.3.1.14. Most compasses can be fitted with leads, pens, or points.

Figure 1.3.1.12: Friction Compasses

Figure 1.3.1.13: Wing Compass

Figure 1.3.1.14: Beam Compass

When using the compass, tilt it in the direction of the line, as shown in Figure 13

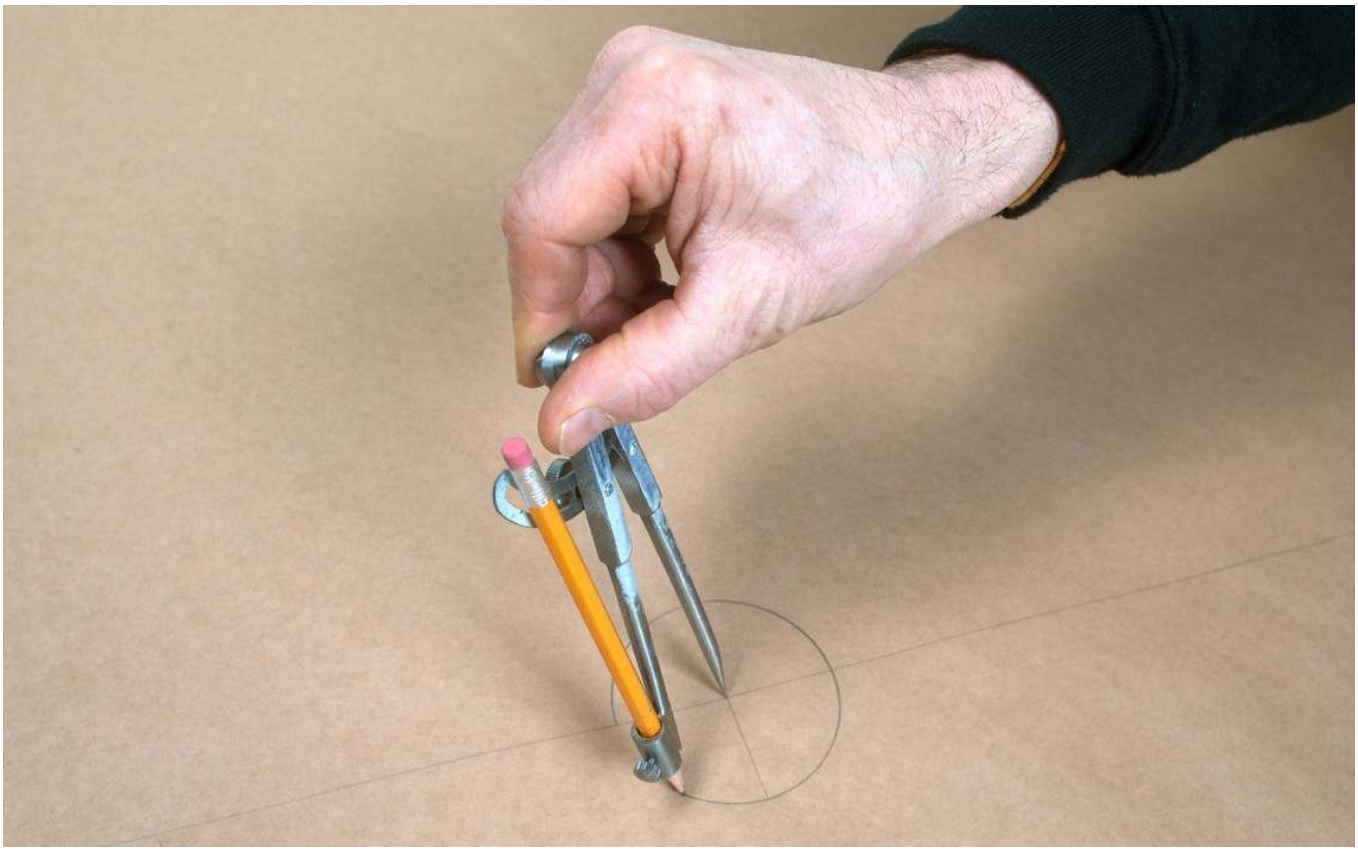

Figure 1.3.1.15: Drawing a circle with a compass

Dividers

Dividers (Figure 1.3.1.16) are used for transferring dimensions from a drawing to a measuring device such as a ruler or scale. They are also used when scribing directly on material like metal.

Figure 1.3.1.16: Dividers

Dusting cloth or brush

It is essential to keep your drawings and drafting surface clean. When equipment gets dirty from the lead pencils, you should clean it regularly so that it does not smudge your drawings. Any soft, clean cloth is suitable. You may want to wash your board occasionally with a spray cleaner.

Use a brush like the one in Figure 1.3.1.17 to clean your table before placing paper down and sweep away any debris as you draw. If you use your hand to brush, you could leave marks on the paper. After sharpening a pencil, wipe off any dust clinging to the pencil's point to prevent smudging.

Figure 1.3.1.17: Dusting Brush

Scale rulers

Scale rulers let you draw diagrams at a reduced scale. They also let you obtain dimensions from a scaled drawing. Scale rulers come in various types to meet the requirements of many kinds of work. Most scale rulers have three edges and six different scales. The scales are read from either end of the rule. A typical combination of metric scales is 1:20, 1:50, 1:100, 1:25, 1:75, and 1:125.

Because of the decimal basis of metric measurements, metric scale rulers are both applicable and easy to use at any scale. Figure 1.3.1.18 shows the two scales from both ends of the same side.

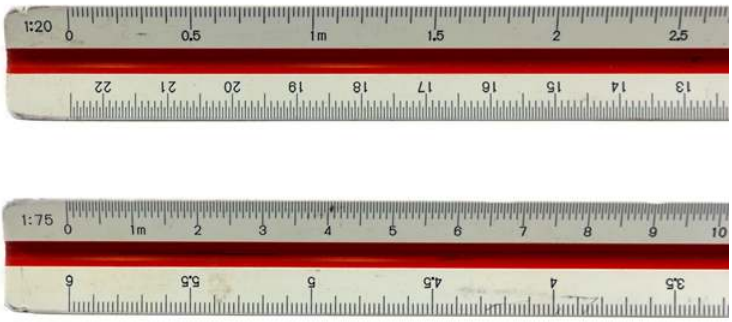

Figure 1.3.1.18: Metric scale ruler

Imperial scale rulers may be an architect's ruler, a mechanical engineer's ruler, or a civil engineer's ruler (Figure 1.3.1.19). The architect's scale ruler is the most common and is in inches and fractions of inches. A mechanical engineer's scale ruler comes in inches and decimals of inches. A civil engineer's scale ruler comes in feet and decimals of feet.

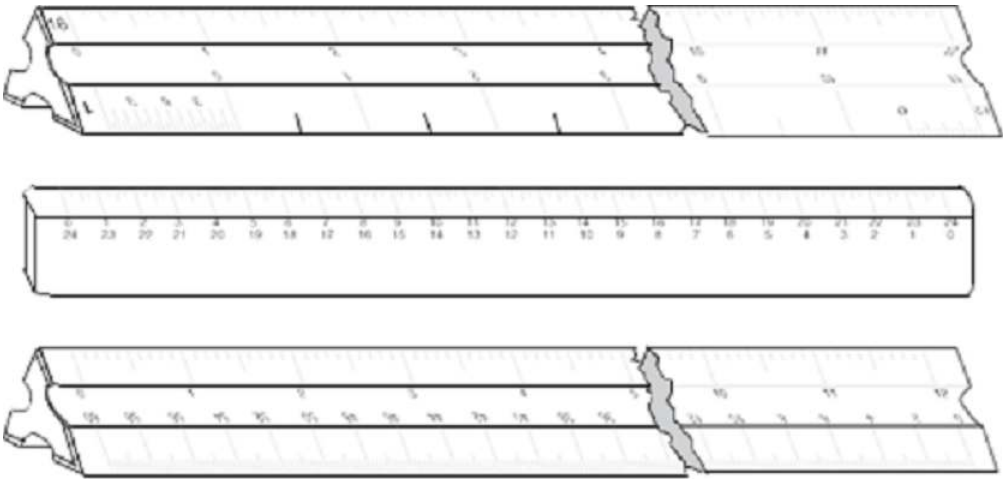

Figure 1.3.1.19: Imperial Scale Rulers

1.3.1: Tools is shared under a CC BY 4.0 license and was authored, remixed, and/or curated by LibreTexts.

- **1.1: Tools** is licensed CC BY 4.0.

1.3.2: Drafting Materials

The most common support for drawing is paper. Even though the original creative surface has changed from the drafting table to the computer screen, on the work site drawings are still primarily in printed form.

Drawing paper

There is a wide variety of drawing paper available in many sizes and of different qualities.
Good quality drawing paper is acid-free and will not turn yellow with age. Light-colored drawing papers are available in pale yellow or buff, but these should be used only when it is not necessary to make copies.

Tracing paper

Tracing paper, which is transparent, can be used to make copies of drawings. It is thin enough to allow the light of photocopy machines to shine through the unmarked areas, and only the lines and figures will block the light. Materials used for tracing include tracing paper, vellum, tracing cloth, glass cloth, and polyester film with a matte finish.

Standard paper sizes

Paper sizes typically comply with one of two different standards: ISO (world standard) or ANSI/ ASME Y14 (American).
The standard ISO series of paper sizes are as follows:

- A0 841 mm × 1189 mm
- A1 594 mm × 841 mm
- A2 420 mm × 594 mm
- A3 297 mm × 420 mm
- A4 210 mm × 297 mm
- A5 148 mm × 210 mm

The standard ANSI/ASME series of paper sizes is as follows:

- E 34 inch × 44 inch
- D 22 inch × 34 inch
- C 17 inch × 22 inch
- B 11 inch × 17 inch
- A 8.5 inch × 11 inch

The 81/2" × 11" standard letter paper corresponds to 216 mm × 279 mm. You can buy precut sheets that have a border and a preprinted title block in the lower right-hand corner. These are available in many standard sizes.

If the paper you use does not have a border and title block, you will have to draw them in. The left-hand border should be wider than the right-hand border and should be at least 50 mm wide to allow room for the prints to be bound. Figure 1.3.2.1 shows a title block with suitable dimensions added.

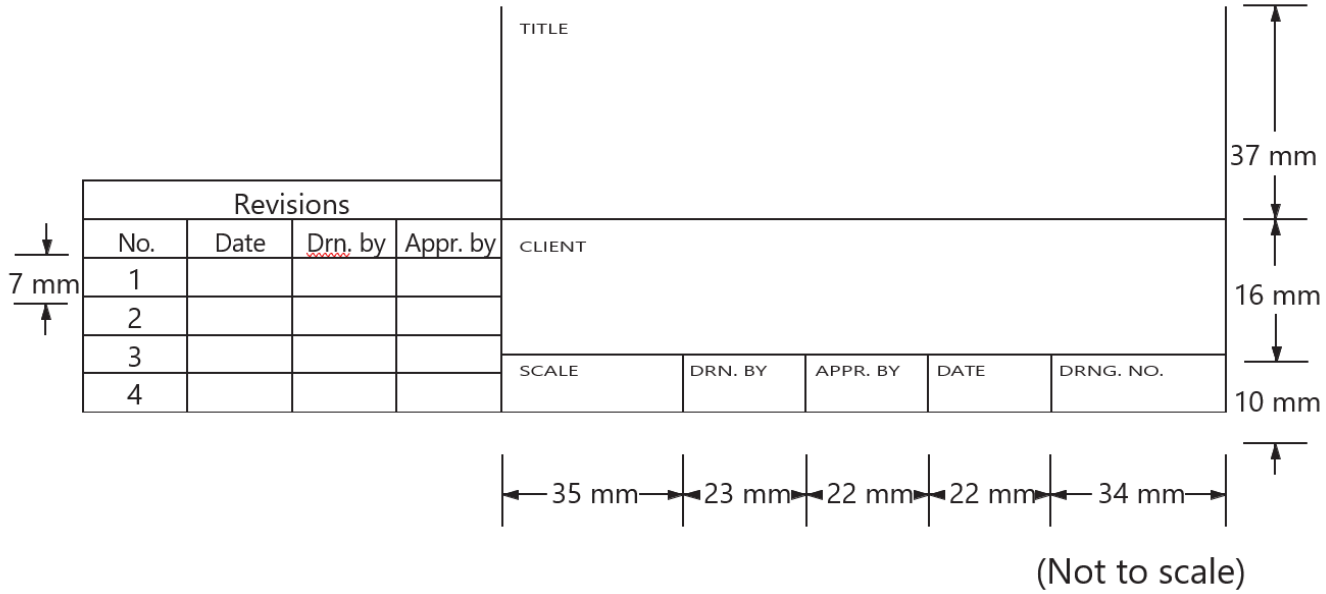

Figure 1.3.2.1: Sample Title Block

Paper rolls

Many grades of paper rolls are available in different widths that can be cut to any length required.

Drafting or masking tape

Use drafting or masking tape to hold the paper on the drafting surface. The tape should be attached at the corners to hold the sheet firmly stretched with no wrinkles. Only short pieces of tape are required.

1.3.2: Drafting Materials is shared under a CC BY 4.0 license and was authored, remixed, and/or curated by LibreTexts.

1.3.3: Self Test 1

1. What are most drafting tables covered with?
    1. Vinyl
    2. Wood
    3. Metal
    4. Plastic wrap
2. Drafting tables are adjustable in height and angle to the floor.
    1. True
    2. False
3. What are T-squares used for?
    1. Drawing angled lines
    2. Drawing vertical lines
    3. Setting paper on a table
    4. Drawing horizontal lines
4. Why might a set square have rabbeted edges?
    1. To help you prevent smudges
    2. To help keep your pencil sharp
    3. To help keep your pencil aligned
    4. To allow you to draw straight lines
5. Checking a triangle should be done periodically.
    1. True
    2. False
6. What is a set square used for?
    1. Drawing circles
    2. Drawing curved lines
    3. Drawing vertical and angled lines
    4. Drawing horizontal and angled lines
7. When using a 45°-90°-45° and a 30°-60°-90° triangle, angles can be drawn every 10°.
    1. True
    2. False
8. What is a protractor used for?
    1. Measuring lines
    2. Measuring angles
    3. Drawing angled lines
    4. Drawing straight lines
9. What kind of line is drawn to check a triangle?
    1. Straight
    2. Parallel
    3. Oblique
    4. Perpendicular
10. What is a compass used for?
    1. Drawing angled lines
    2. Drawing straight lines
    3. Drawing arcs and circles
    4. Drawing irregular curves
11. What is an erasing shield used for?

11. What is an erasing shield used for?
    1. To erase mistakes
    2. To hold the eraser
    3. To erase in a desired area
    4. To prevent the need for erasing
12. A spline is a plastic or rubber rod reinforced with metal used for drawing curves.
    1. True
    2. False
13. What is the tool called a divider used for?
    1. Drawing circles
    2. Drawing a diameter
    3. Scribing arcs on metal
    4. Drawing arcs and curves
14. What is the purpose of a scale ruler?
    1. To draw straight lines
    2. To enlarge the scale of a drawing
    3. To create drawings at a reduced scale
    4. To convert between imperial and metric measures

1.3.3: Self Test 1 is shared under a CC BY 4.0 license and was authored, remixed, and/or curated by LibreTexts.

- **1.E: Self Test 1** is licensed CC BY 4.0.

CHAPTER OVERVIEW

2: Introduction to Drawing Layout

2.1: Basic layout of a drawing

2: Introduction to Drawing Layout is shared under a CC BY 4.0 license and was authored, remixed, and/or curated by LibreTexts.

2.1: Basic layout of a drawing

The layout of most drawings is similar in that the drawing format has some standard features or components. A typical drawing format will include some or all of these features:

- title block
- bill of materials or material list
- area where the job specifications are listed
- general notes
- reference drawing list
- revision chart

These drawing components are common for some types of drawings; however, other components may be used to show the necessary information for the complete design.

Each of the listed drawing components serves a specific purpose and contains information about the job and its specifications, Figure 2.1.1.

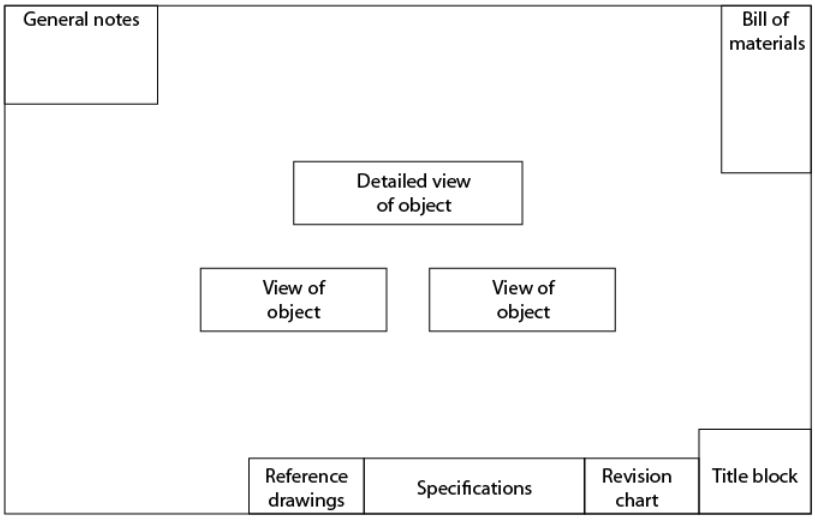

Figure 2.1.1: Drawing format

The following information is a guideline to use each time a new drawing is observed.

Title block

The title block is located in the lower right corner of the drawing and is separated from the main drawing. The contents of the title block will vary from company to company and often differ from drawing to drawing by the same company. As a standard feature, a company will have its name and logo in the title block along with other standard company information, plus particular information such as the customer's name.

The following information can be located in the title block; however, note that not all of the items listed below are necessarily included:

- job title
- name of the item to be fabricated or installed
- name of the customer
- name of the designing engineer or firm
- name or initial of draftsperson and checker
- date drawn
- drawing number
- contract number or job number

- number of revisions, if any, for the drawings
- scale of the drawing

Bill of materials

The bill of materials is usually located in the upper right corner of the drawings, above the title block. As with the title block, the bill of materials is separated from the rest of the drawing and is essentially a table with partitioned rows and columns showing:

- item number or mark number
- quantity
- material description
- material grade
- material weight
- remarks

Revision chart

The revision chart, is often located to the left of the title block, and is bordered off from the rest of the drawing. The revision chart, like the bill of materials, is divided into rows and columns. These columns identify the revision number and give a general description of the revision, who checked the revision, and the date of the revision. It is essential to make sure that you are working from the latest revision, as it is not uncommon for changes to be made from the original drawing.

Drawing specifications

The specifications section of a drawing is used to list all the design information of the item being built or installed. This section is often located to the left of the revision chart. If drawing space is a problem, it may be located elsewhere. A common location is the area below the bill of materials. (The contents of specifications are covered in more detail later.)

Drawing notes

Drawings will often contain two types of notes: general and specific. The general and specific notes should not be confused with the information found in the bill of materials, title block, revision chart, or the drawing specifications.

The general notes are usually located in the upper left corner of the drawing. A general note is information about the fabrication that refers to similar items or procedures throughout the drawing. Specific notes can be found anywhere on the drawing as needed and are most often written with a leader line pointing to the relevant part or area.

Reference drawings

A job requiring more than one drawing is called a drawing set, and it contains two or more drawings. It is a common practice to have a list of all of the drawings that make up the drawing set. This listing is referred to as the reference drawings for the project.

Often work being shown on one drawing requires you to look at or reference other drawings in the set. There is no specific area where the reference drawings are listed; however, two common locations are near the bottom of the print on the far left-hand side, and just below the bill of materials.

Specifications

Specifications in North America form part of the contract documents that accompany and govern the construction of a building. Specifications are written descriptions of the materials and procedures that must be used in constructing a building or system. These specifications translate working drawings into words to ensure that systems will be neither overdesigned nor underdesigned. They tell the contractor exactly which materials must be used. Aside from serving as a manual on how to do the job, the book of specifications has another function: it is a legal document outlining each contractor's obligations. These obligations may include the need to provide fire insurance, to pay for municipal inspections, or to complete the job by a certain deadline.

2.1: Basic layout of a drawing is shared under a CC BY 4.0 license and was authored, remixed, and/or curated by LibreTexts.

- **5.1: Basic layout of a drawing** is licensed CC BY 4.0.

CHAPTER OVERVIEW

3: Lines Styles and Types

3.1: Line styles and types
3.2: The Meaning of Lines

3: Lines Styles and Types is shared under a CC BY 4.0 license and was authored, remixed, and/or curated by LibreTexts.

3.1: Line styles and types

Standard lines have been developed so that every drawing or sketch conveys the same meaning to everyone. In order to convey that meaning, the lines used in technical drawings have both a definite pattern and a definite thickness. Some lines are complete, and others are broken. Some lines are thick, and others are thin. A visible line, for example, is used to show the edges (or “outline”) of an object and to make it stand out for easy reading. This line is made thick and dark. On the other hand, a center line, which locates the precise center of a hole or shaft, is drawn thin and made with long and short dashes. This makes it easily distinguishable from the visible line.

When you draw, use a fairly sharp pencil of the correct grade and try to maintain an even, consistent pressure to make it easier for you to produce acceptable lines (Figure **3.1.1**). Study the line thicknesses (or “line weights”) shown in Figure **3.1.2** and practice making them.

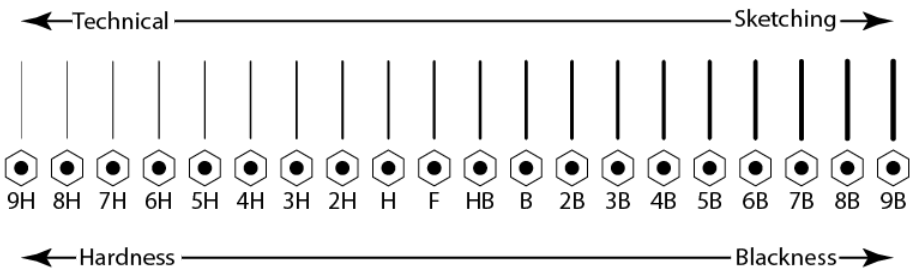

Figure **3.1.1**: Lead grade and usage

In computer drafting, the line shape remains the same, but line thickness may not vary as it does in manually created drawings. Some lines, such as center lines, may not cross in the same manner as in a manual drawing. For most computer drafting, line thickness is not important.

Type	Weight	Line	Description
Object line Margin line	Heavy		Solid line to show visible shapes, edges, and outlines.
Hidden body line	Medium		Broken lines of long and short dashes to show hidden object lines not visible to the eye.
Phantom line	Light		Broken line of short dashes to show alternate positions or movement of a part.
Section line	Light	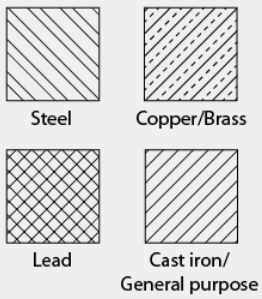	Unbroken lines arranged in a pattern, usually straight and at a 45° diagonal.
Projection line	Light		Unbroken lines that extend away from the object or feature for emphasis.
center line	Light		Broken lines of long and short dashes to show the center of an object.
Extension line/ Dimension line	Light	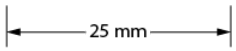	Extension lines are small lines that extend outward from an object or feature. Dimension lines span between the extension lines with arrowheads and a given dimension.
Leader line	Light	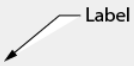	Unbroken line usually drawn at an angle, often with a “dogleg” and an arrowhead. A dot is used in place of an arrowhead where a surface is referenced. Usually accompanied by a label.
Cutting plane line	Heavy		Broken line of one long and two short dashes to show an imaginary cross-section. The arrowheads show the direction from where the cross-section is viewed. A corresponding image will show the view of A.

Type	Weight	Line	Description
Break lines for wood and metal	Heavy		Unbroken freehand or straight zig-zag lines to abbreviate longer spans of wood or metal.
Break lines for piping	Heavy	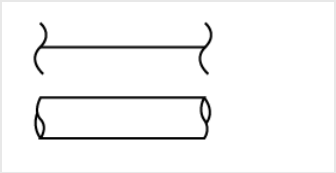	Curled lines to abbreviate a longer span of pipe.

Figure 3.1.2: Weight of lines

To properly read and interpret drawings, you must know the meaning of each line and understand how each is used to construct a drawing. The ten most common are often referred to as the “alphabet of lines.” Let’s look at an explanation and example of each type.

Object lines

Object lines (Figure 3.1.3) are the most common lines used in drawings. These thick, solid lines show the visible edges, corners, and surfaces of a part. Object lines stand out on the drawing and clearly define the outline and features of the object.

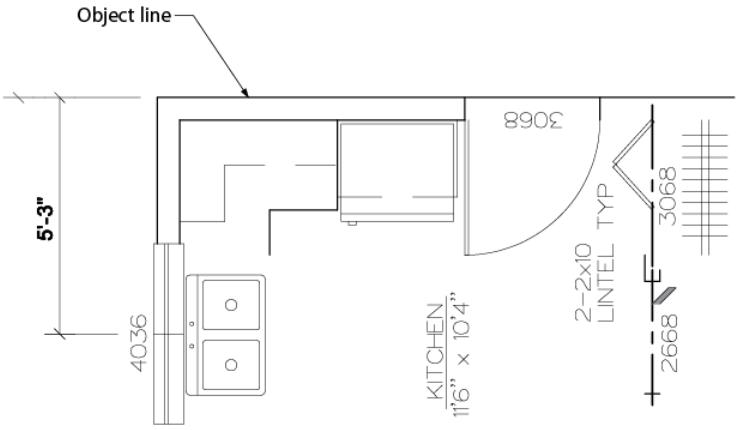

Figure 3.1.3: Object lines

Hidden lines

Hidden lines (Figure 3.1.4) are used to show edges and surfaces that are not visible in a view. These lines are drawn as thin, evenly-spaced dashes. A surface or edge that is shown in one view with an object line will be shown in another view with a hidden line.

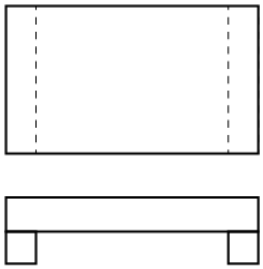

Figure 3.1.4: Hidden lines

Center lines

Center lines (Figure 3.1.5) are used in drawings for several different applications. The meaning of a center line is normally determined by how it is used. center lines are thin, alternating long and short dashes that are generally used to show hole centers and center positions of rounded features, such as arcs and radii. Arcs are sections of a circle, and radii are rounded corners or edges of a part. center lines can also show the symmetry of an object.

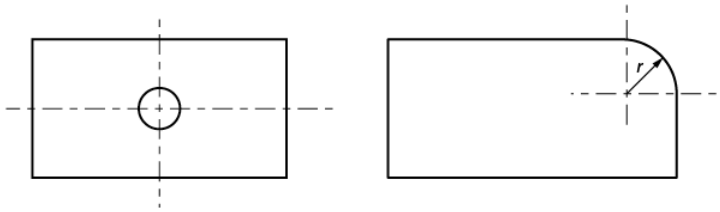

Figure 3.1.5: Center lines

Dimension and extension lines

Dimension and extension lines (Figure 3.1.6) are thin, solid lines that show the direction, length, and limits of the dimensions of a part. Dimension lines are drawn with an arrowhead at both ends.

Extension lines are drawn close to, but never touching, the edges or surface they limit. They should be perpendicular, or at right angles, to the dimension line. The length of extension lines is generally suited to the number of dimensions they limit.

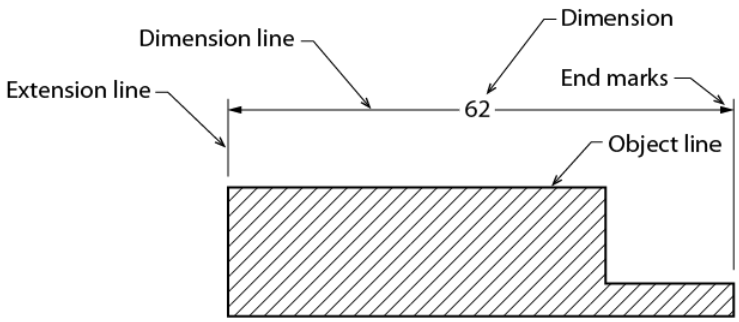

Figure 3.1.6: Dimension and extension lines

Leader lines

Leader lines (Figure 3.1.7) show information such as dimensional notes, material specifications, and process notes. These lines are normally drawn as thin, solid lines with an arrowhead at one end. They are bent or angled at the start but should always end horizontally at the notation. When leader lines reference a surface, a dot is used instead of an arrowhead.

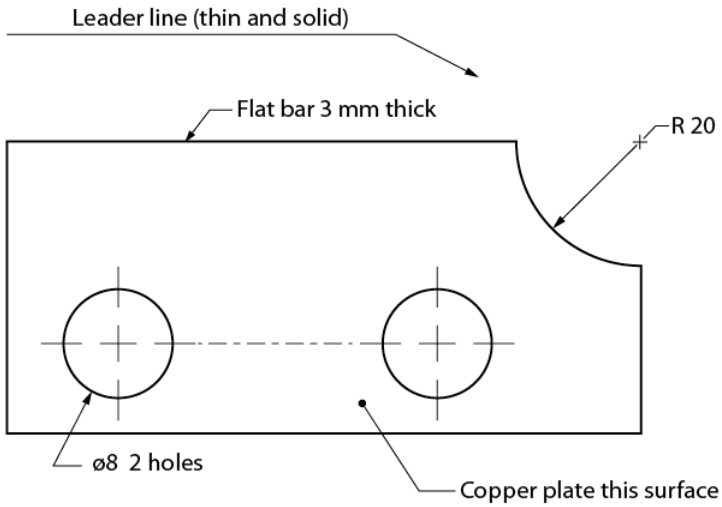

Figure 3.1.7: Leader lines

Note that the symbol ø is used to indicate a diameter rather than the abbreviation "DIA." The number that immediately follows this symbol is the diameter of the hole, followed by the number of holes that must be drilled to that dimension.

Phantom lines

Like center lines, phantom lines (Figure 3.1.8) are used for several purposes in blueprints. Phantom lines are used to show alternate positions for moving parts and the positions of related or adjacent parts and to eliminate repeated details. Phantom lines are drawn as thin, alternating long dashes separated by two short dashes.

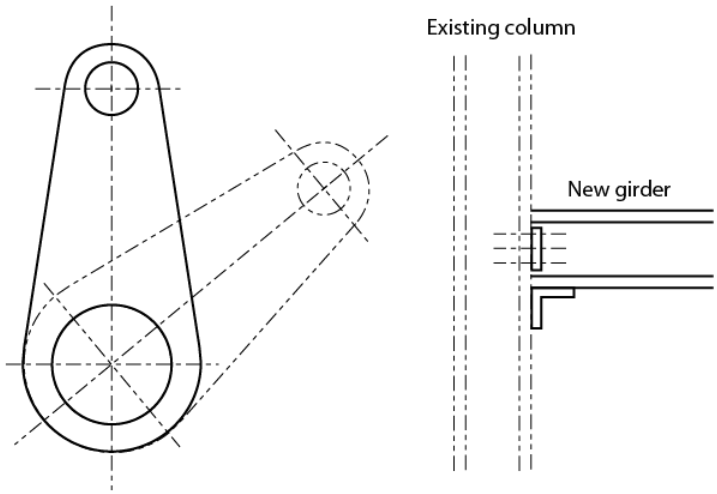

Figure 3.1.8: Phantom lines

Cutting plane lines

Cutting plane lines (Figure 3.1.9) show the location and path of imaginary cuts made through parts to show internal details. In most cases, sectional views (or views that show complicated internal details of a part) are indicated by using a cutting plane line. These lines are thick, alternating long lines separated by two short dashes. The arrowheads at each end show the viewing direction of the related sectional view. The two main types of cutting plane lines are straight and offset.

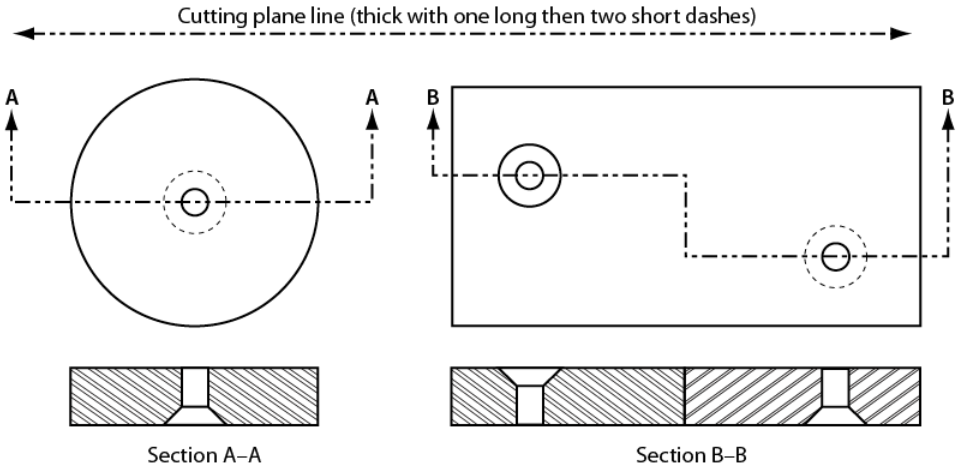

Figure 3.1.9: Cutting plane lines

Section lines

Section lines, also known as sectional lining, (Figure 3.1.10) indicate the surfaces in a sectional view as they would appear if the part were actually cut along the cutting plane line. These are solid lines that are normally drawn at 45-degree angles. Different symbols are used to represent different types of materials.

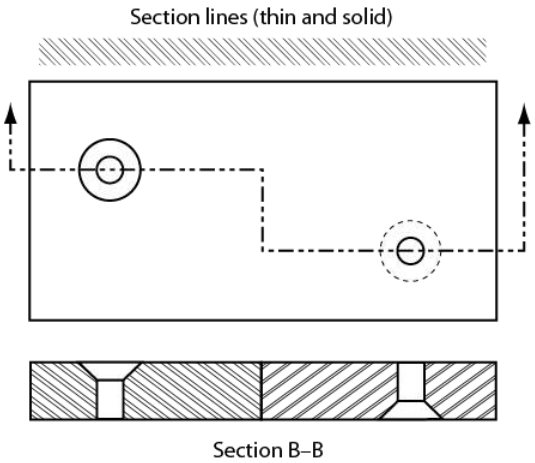

Figure 3.1.10: Section lines combined with cutting plane lines

Break lines

Break lines are drawn to show that a part has been shortened to reduce its size on the drawing. The two variations of break lines common to blueprints are the long break line and the short break line (Figure 3.1.11). Long break lines are thin solid lines that have zigzags to indicate a break. Short break lines are thick, wavy solid lines that are drawn freehand. When either of these break lines is used to shorten an object, you can assume that the section removed from the part is identical to the portions shown on either side of the break.

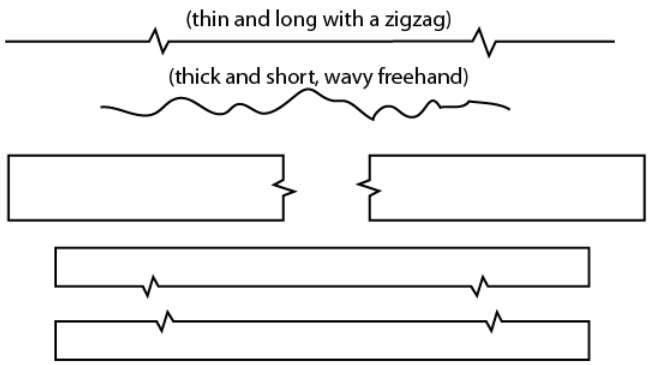

Figure 3.1.11: Break lines

3.1: Line styles and types is shared under a CC BY 4.0 license and was authored, remixed, and/or curated by LibreTexts.

- **2.1: Line styles and types** is licensed CC BY 4.0.

3.2: The Meaning of Lines

Remember to read blueprints and create effective drawings; you must understand the use of lines. The alphabet of lines is the common language of the technician and the engineer. In drawing an object, the different views are arranged in a certain way, and various lines convey the information. Here is another example of the use of standard lines in a simple drawing is shown in Figure 3.2.1. Line characteristics, such as width, breaks in the line, and zigzags, are shown below in Figure 3.2.2.

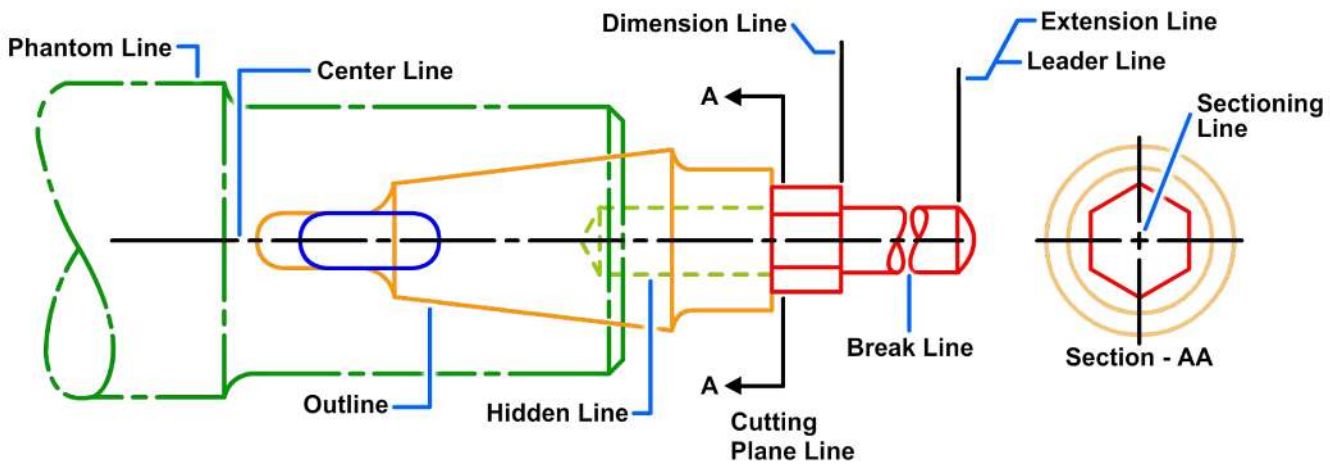

Figure 3.2.1: Finish marks and lines.

Line Standards

Table 3.2.1: Line characteristics and conventions for drawings.

Name	Convention	Description and Application	Example
Center Lines		Thin lines made up of long and short dashes alternatively spaces and consistent in length. Used to indicate symmetry about an axis and location of centers.	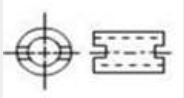
Visible Lines		Heavy unbroken lines. Used to indicate visible edges of an object.	
Hidden Lines		Medium lines with short evenly spaced dashes. Used to indicate concealed edges.	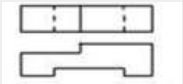
Extension Lines		Thin unbroken lines. Used to indicate extent of dimensions.	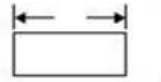
Dimension Lines		Thin lines terminated with arrow heads at each end. Used to indicate distance measured.	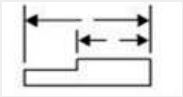
Leader		Thin line terminated with arrowhead or dot at one end. Used to indicate a part, dimension or other reference.	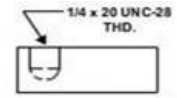
Break (Long)	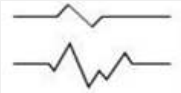	Thin, solid ruled lines with freehand zigzags. Used to reduce size of drawing required to delineate object and reduce detail.	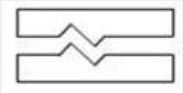
Break (Short)		Thick, solid free hand lines. Used to indicate a short break.	
Phantom or Datum Line		Medium series of one long dash and two short dashes evenly spaced ending with long dash. Used to indicate alternate position of parts, repeated detail or to indicate a datum plane.	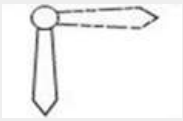
Stitch Line		Medium line of short dashes evenly spaced and labeled. Used to indicate stitching or sewing.	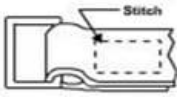

Cutting or Viewing Plan - Viewing Plane Optional	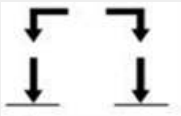	Thick solid lines with arrowhead to indicate direction in which section or plane is viewed or taken.	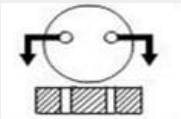
Cutting Plane for Complex or Offset Views		Thick short dashed. Used to show offset with arrowheads to show direction viewed.	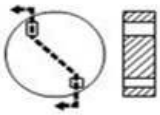

3.2: The Meaning of Lines is shared under a CC BY 4.0 license and was authored, remixed, and/or curated by LibreTexts.

CHAPTER OVERVIEW

4: Sketching

4.1: Sketching Technique

4: Sketching is shared under a CC BY 4.0 license and was authored, remixed, and/or curated by LibreTexts.

4.1: Sketching Technique

Freehand sketching is a crucial skill that can be mastered with practice and a few fundamental guidelines. It's an essential tool for interpreting drawings and a valuable method for conveying job information to others, especially when no formal drawing is available. While professionally produced drawings may often be used in your work, there are many instances in the field where you might find yourself working off sketches drawn on various surfaces, from napkins and cardboard to wood scraps or any flat surface.

The ability to create technical sketches doesn't necessitate being an artist. Sketching isn't difficult if you follow a few simple rules, and while you might be slow at first, with practice, you'll be able to create reasonably good sketches without too much effort. The goal isn't to be judged as a professional draftsperson or architect but to be able to describe with lines what you need to be built, repaired, or modified. This requires practice and is an essential skill to develop.

For freehand sketching, a pad of graph paper (8 ½" × 11" sheets with a 5 mm or ¼" grid), a sharp HB pencil, and an eraser are the tools of the trade. Always ensure your pencil is sharp before starting any sketch, as this will enhance the quality and precision of your work. Remember, sometimes you'll need to work with what you have, using the tools and materials at hand, to communicate effectively about a project.

Sketching techniques

All you need to start with is a pencil and some paper. A soft pencil works best for most people, so try a #2 or an F. Keep the pencil sharp but not too sharp: hold it firmly enough for control but not so tight that your arm isn't relaxed. Don't draw heavily at first. That way, it is easier to erase without smudging. Darken the sketch when it begins to shape up the way you want it.

It's generally best to begin sketching with grid paper, although some prefer plain paper. On the job, you may find yourself sketching on the back of a work order or piece of packing crate. In any case, learning to sketch quickly and effectively is essential.

Here are some limbering-up exercises wot get you started. To keep your pencil sharper longer and for more precise lines widths, try turning your pencil slowly while completing the lines in the exercises below.

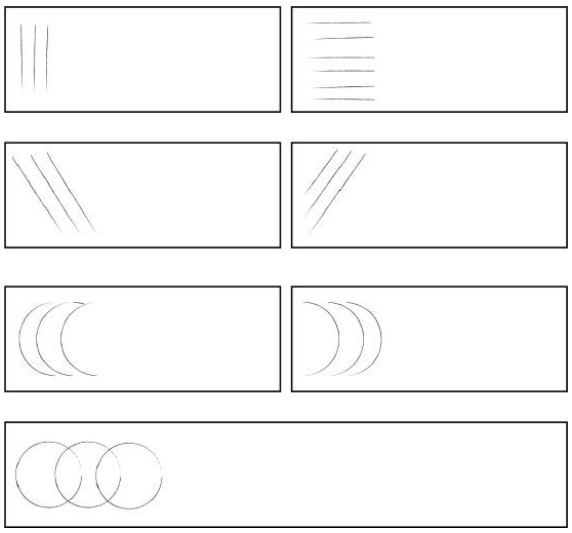

Figure 4.1.1: Sketching line practice

Sketching parallel lines

Start by drawing lines parallel to the paper's edges, such as a border line and title block. Use your finger as a guide when you draw along the grid line on the sketch pad (Figure 4.1.2). Letting the end of your little finger run down the edge of the paper pad as you draw will steady your hand and make it easier to get a straight line.

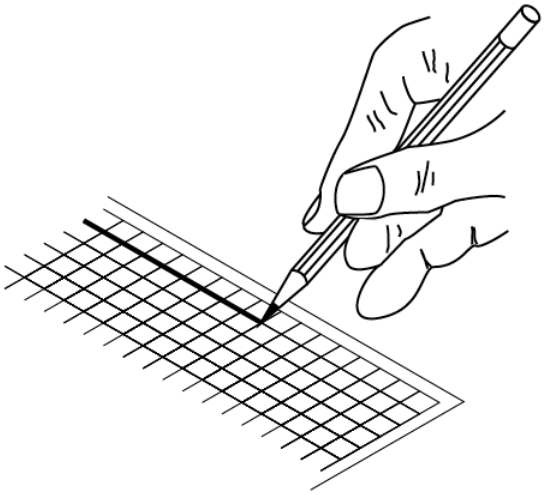

Figure 4.1.2: Sketching a parallel vertical line

Sketching non-parallel lines

When sketching lines that are not parallel to the sides of the paper, turn the paper around so that the line you wish to draw is either straight up and down in front of you or straight across the sheet of paper.

Drawing lines this way rather than at an angle across the sheet is much easier. Let the side of your little finger rest on the paper as you draw. This will help you steady your hand (Figure 4.1.3).

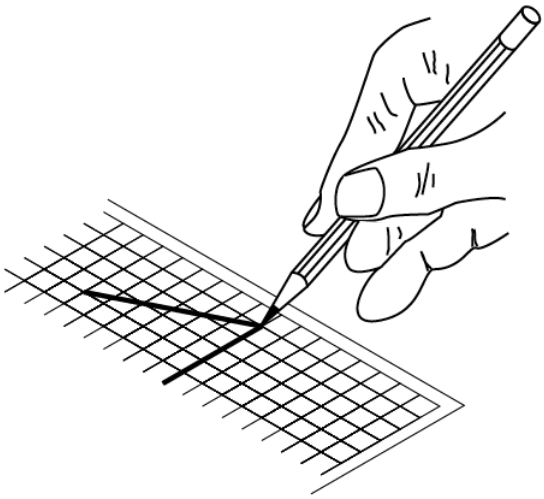

Figure 4.1.3: Sketching a horizontal line

Sketching a rectangle

Locate the corners of the rectangle first. Then place your paper in a comfortable position for sketching and sketch downward for vertical lines and left to right for horizontal lines. Use the grid lines as a guide to help maintain your parallel and at 90 degrees lines to each other (Figure 4.1.4).

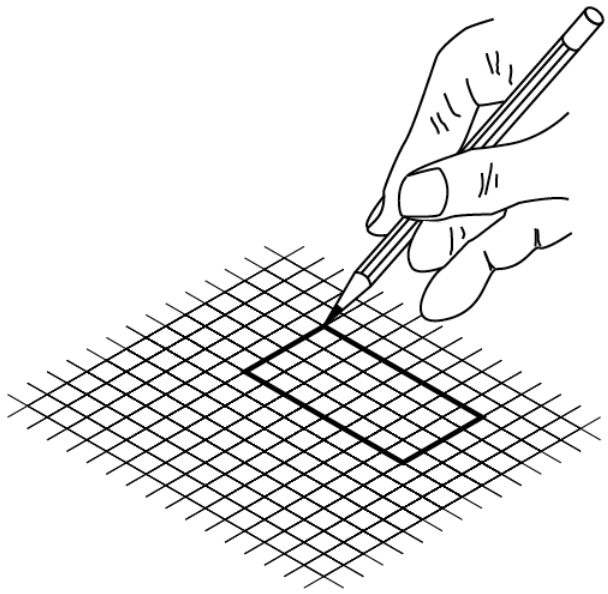

Figure 4.1.4: Sketching a rectangle

Sketching a circle

First, locate the center of the circle (Figure 4.1.5), and then very lightly box in the size of the circle (using the diameter as a guide), as in the top right. Sketch in the circle, one quarter at a time, as shown in the bottom row, left to right. You may find it necessary at first to add light points along the projected circumference to help guide you through each quarter. Remember to move your sketch pad to maintain a comfortable sketching position.

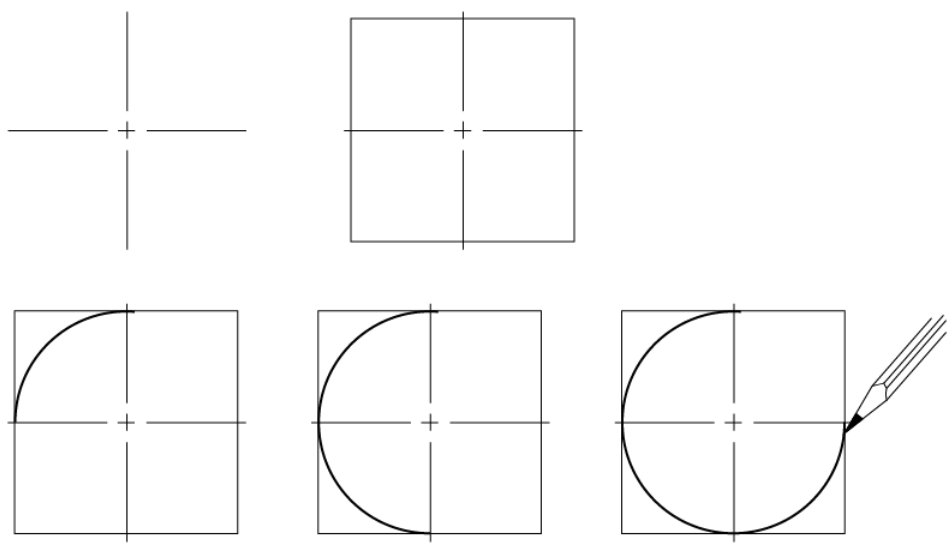

Figure 4.1.5: Sketching a circle

Sketching to approximate scale

Figure 4.1.6 shows the full square on the left. The center square is half size, and the right square is quarter size. Note that the center and right squares are the same shape as the left square, only smaller.

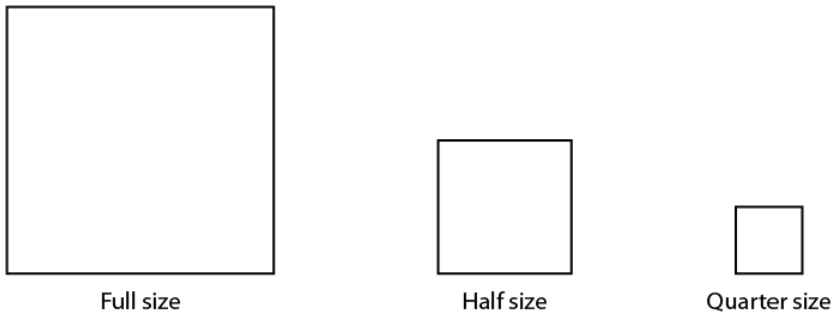

Figure 4.1.6: Sketching to scale

When sketching freehand, your sketches should reflect the actual shapes of objects as much as possible. Using grid paper, sketching to an approximate scale is not difficult. Assume that the object in Figure 4.1.7 is shown full size. As it is necessary to show all orthographic views on the same sheet of paper, the views must be scaled. Figure 4.1.8 shows the views at approximately one-half the original size.

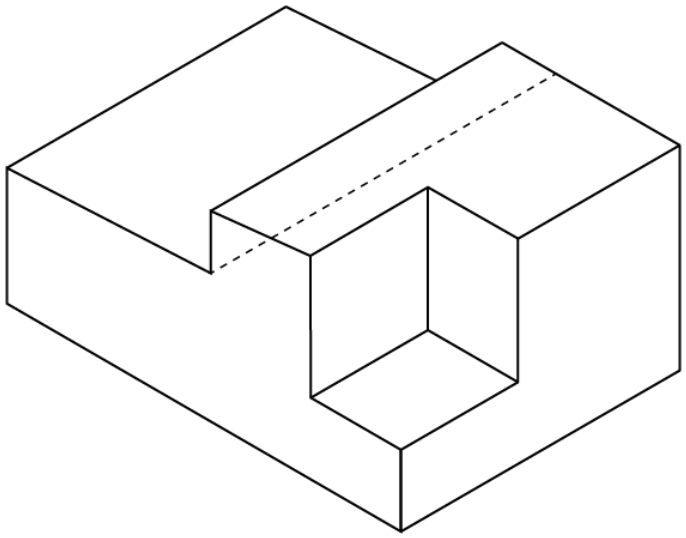

Figure 4.1.7: Full-size isometric object

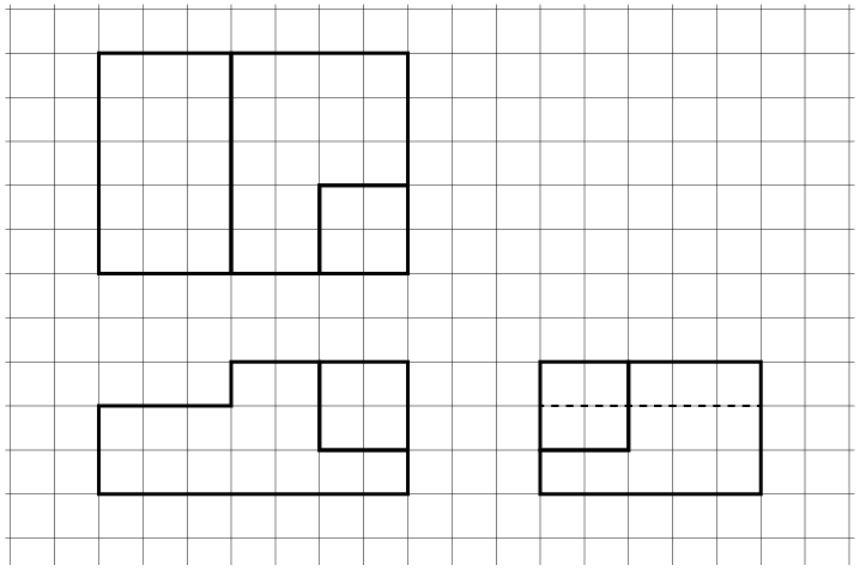

Figure 4.1.8: Scale orthographic projections

4.1: Sketching Technique is shared under a CC BY 4.0 license and was authored, remixed, and/or curated by LibreTexts.

- **6.1: Creating Drawings and Sketches** is licensed CC BY 4.0.

CHAPTER OVERVIEW

5: Isometric Drawings

5.1: Make isometric sketches of simple rectangular objects
5.2: Sketching Figures with Non-isometric Lines
5.3: Make Isometric Sketches

5: Isometric Drawings is shared under a CC BY 4.0 license and was authored, remixed, and/or curated by LibreTexts.

5.1: Make isometric sketches of simple rectangular objects

Isometric sketches are helpful because they are easy to draw and clearly represent an object or system. This clarity comes from using directional lines to represent the three dimensions of length, width, and height, much like a picture.

Construction methods

The following steps explain how to draw an isometric cube. The three dimensions of length, width, and height are drawn along the isometric axes shown in Figure 5.1.1. The lengths of objects running parallel to these axes can be drawn to scale. Lines at other angles will not be to scale.

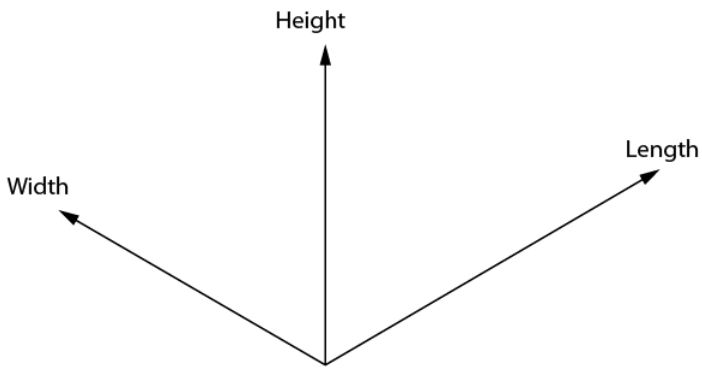

Figure 5.1.1: Isometric axes

Draw a small star-shaped axis on the bottom corner of your grid paper. The sloping axes should be drawn at a 30-degree angle from the horizontal grid line. The vertical axis of the star indicates height (H) or depth (D), and the two sloping axes indicate the length (L) and the width (W) of the rectangle. The vertical axis can be used as a guide when making lines on your drawing. Notice we have labeled the points on the star in Figure 5.1.2. When drawing a stationary object, these labels can change depending on your desired view. The bottom two horizontal points indicate the view that is being drawn. In this case, we would be creating a front-right view.

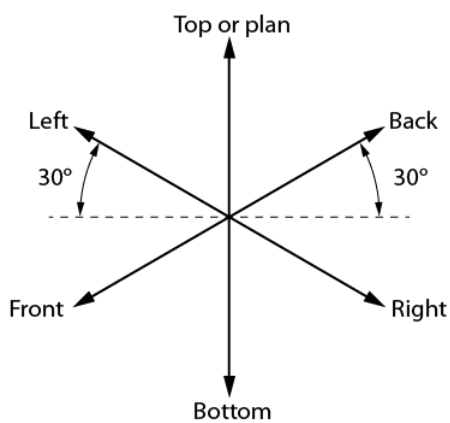

Figure 5.1.2: Step 1: Isometric guide for front-right view

Sketch the top of the block by drawing two lines, one parallel to L and one parallel to W (Figure 5.1.3).

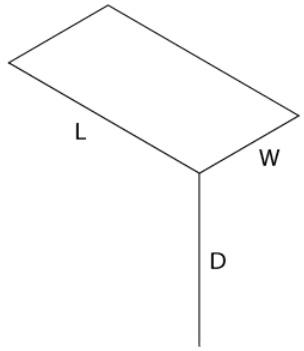

Figure 5.1.3: Step 2: Isometric view of the top surface of a rectangular block

Sketch two lines, one parallel to L and one parallel to D, as shown in Figure 5.1.4.

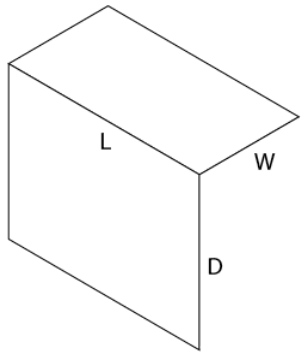

Figure 5.1.4: Step 3: Lines parallel to L and D

Sketch two lines, one parallel to W and one parallel to D, to complete the outline of the rectangular block as shown in Figure 5.1.5. Begin with light construction lines so that you can make any necessary adjustments before darkening them. Figure 5.1.6 shows the finished isometric sketch.

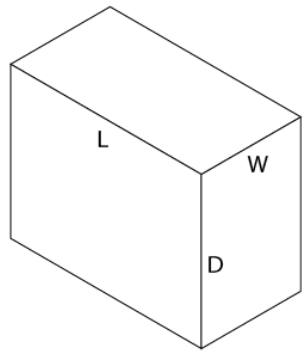

Figure 5.1.5: Step 4: Completed outline of rectangular block

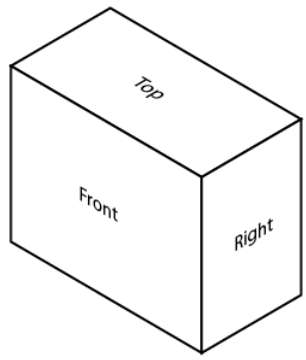

Figure 5.1.6: Completed isometric sketch

Sketching irregular shapes with isometric lines

Not all rectangular objects are as simple as the block you have just sketched. Sometimes the shapes are irregular and have cut-out sections, or some sides longer than others. All rectangular objects can be fitted into a box having the maximum length (L), width (W), and depth (D). Begin by sketching a light outline of a basic box that is the size of the object to be drawn.

Consider the object shown in the three-view orthographic sketch in Figure 5.1.7. To produce an isometric sketch of this object, you need to find the maximum L, W, and D for the containing box (Figure 5.1.7). In this case:

- L = 5 grid spaces
- W = 3 grid spaces
- D = 3 grid spaces

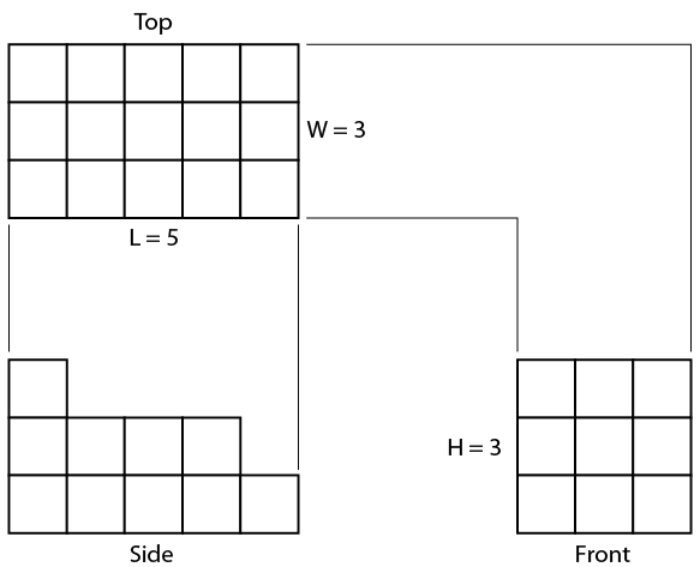

Figure 5.1.7: Orthographic views

Sketch a light outline of the basic rectangular box to the required size, as shown in Figure 5.1.8.

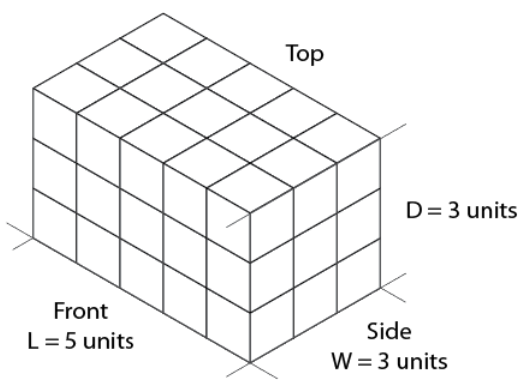

Figure 5.1.8: Basic outline

The front view shows the outline most clearly. Place this view on the front surface of the isometric box. Use the dimension given in the front view of Figure 5.1.7 and mark the number of units indicated along the axes L and D (Figure 5.1.9).

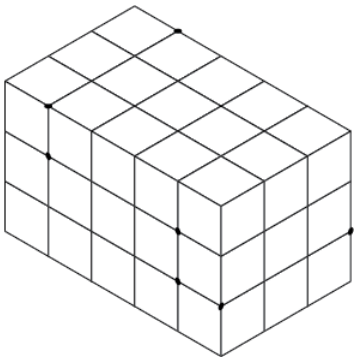

Figure 5.1.9: Location of marks on axes

Lightly sketch lines parallel to the L and D axes from the marked points on the front surface (Figure 5.1.10). Once you are sure your sketch is correct, the step outline is drawn more heavily to emphasize the object's profile.

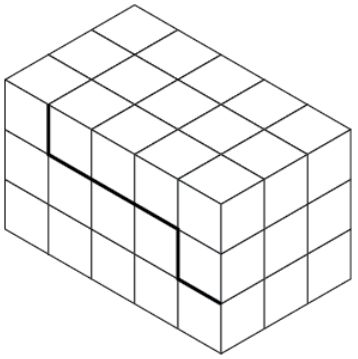

Figure 5.1.10: Location of main features

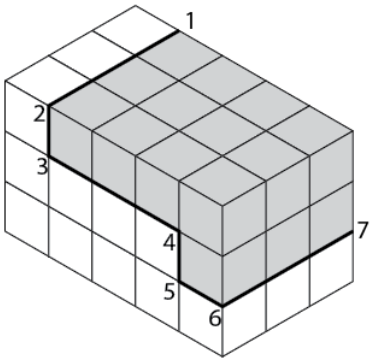

Figure 5.1.11: Location of outer surfaces

Sketch in a series of lines parallel to the axes (L, W, and D) from the corners numbered 1 to 7 (Figure 5.1.11). These lines establish the stepped outline as shown in Figure 5.1.12.

When you are sure your isometric sketch is correct, erase all unnecessary construction lines and darken the object lines. Your completed sketch of the rectangular object should be similar to that in Figure 5.1.13.

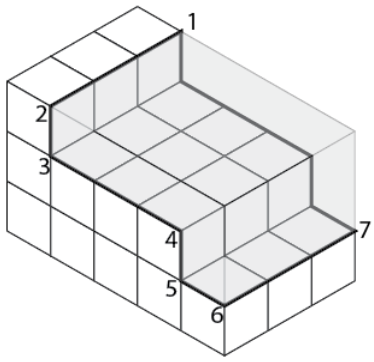

Figure 5.1.12: Internal features

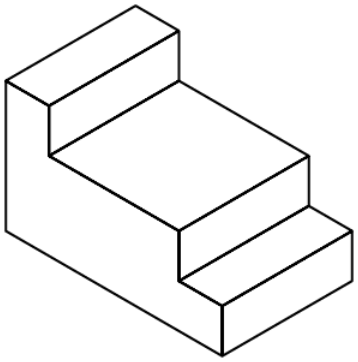

Figure 5.1.13: Completed sketch

5.1: Make isometric sketches of simple rectangular objects is shared under a CC BY 4.0 license and was authored, remixed, and/or curated by LibreTexts.

- **6.2: Make isometric sketches of simple rectangular objects** is licensed CC BY 4.0.

5.2: Sketching Figures with Non-isometric Lines

Figure 5.2.1 shows an object that is basically rectangular but has one face machined at an angle. You can easily construct an isometric sketch of the basic rectangular block. To show the machined face, it is necessary to plot the appropriate points of intersection and join those points to produce the correct angle.

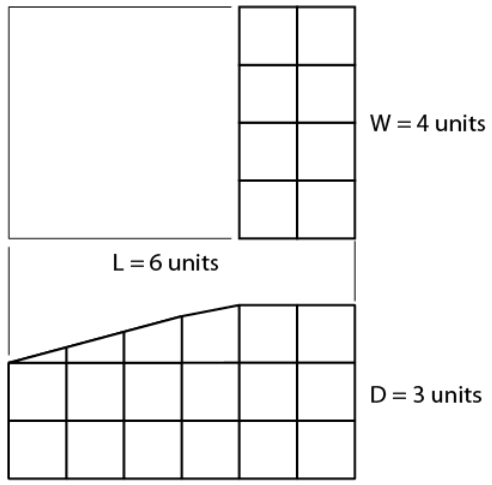

Figure 5.2.1: Rectangle with face machined at an angle

Sketch a light outline of the basic rectangular block using the size measurements given in Figure 5.2.1. Mark the number of units indicated along the length (L) and the depth (D), as shown in Figure 5.2.2.

Lightly sketch lines parallel to the original block outlines from the marked points on the front and side surfaces, as shown in Figure 5.2.3.

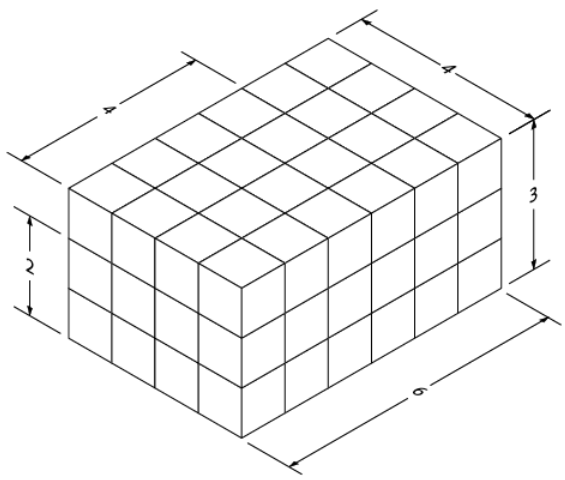

Figure 5.2.2: Rectangle with units marked along L and D

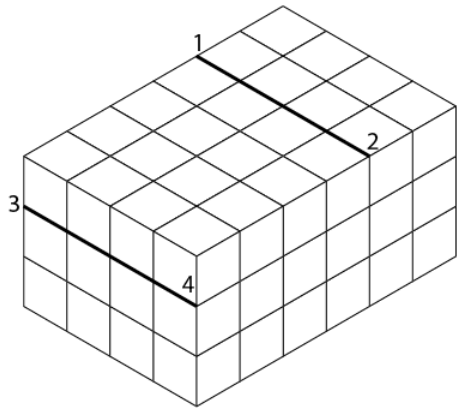

Figure 5.2.3: Lines sketched parallel to original block outline

Join the two points on the front face and the two ends of the lines you have just sketched across the object (Figure 5.2.4). Once you are sure your sketch is correct, erase the light lines that originally outlined the block and darken the outline of the completed block as shown in Figure 5.2.5.

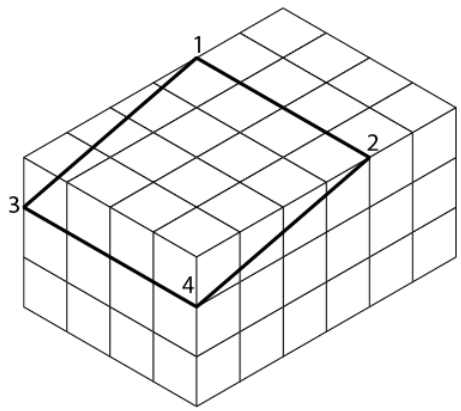

Figure 5.2.4: Front face

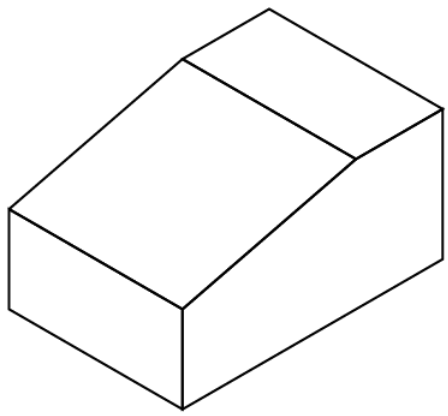

Figure 5.2.5: Completed block

5.2: Sketching Figures with Non-isometric Lines is shared under a CC BY 4.0 license and was authored, remixed, and/or curated by LibreTexts.

- **6.3: Sketching Figures with Non-isometric Lines** is licensed CC BY 4.0.

5.3: Make Isometric Sketches

Given the orthographic sketches shown of the two objects in 1 and 2, make isometric sketches of each object to the same scale as the object shown. Borders and title blocks are not necessary for these sketches.

1.

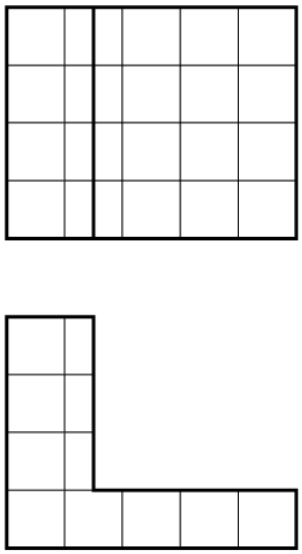

2.

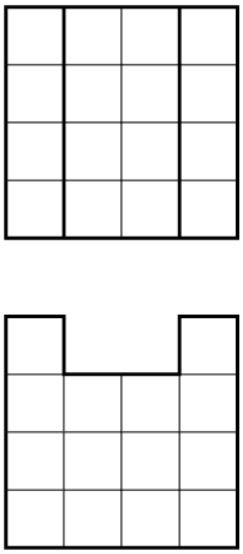

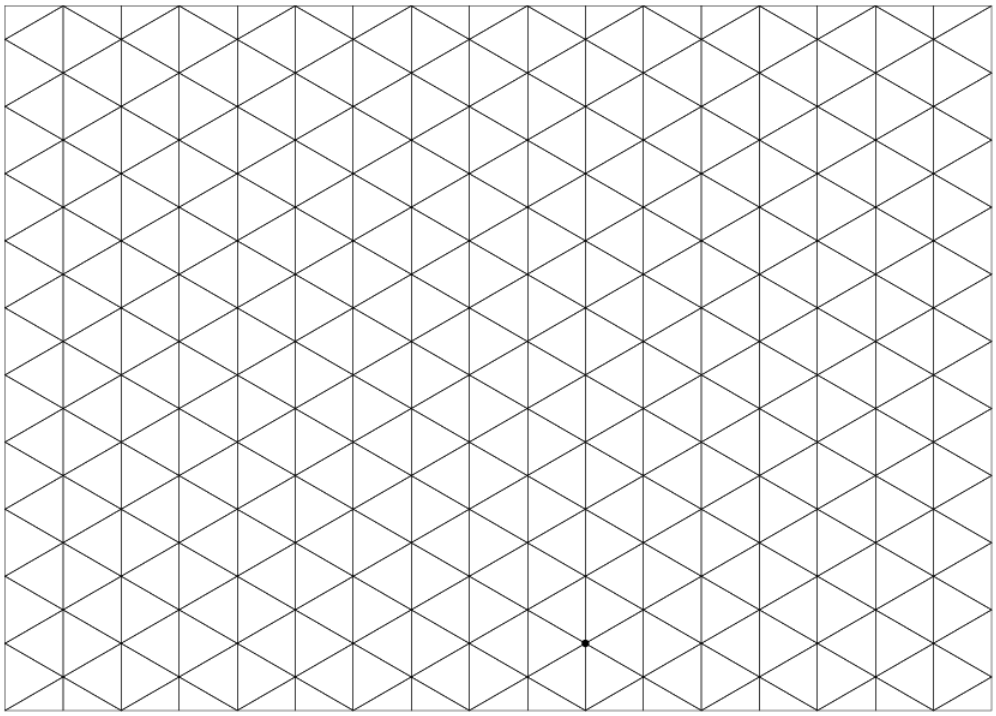

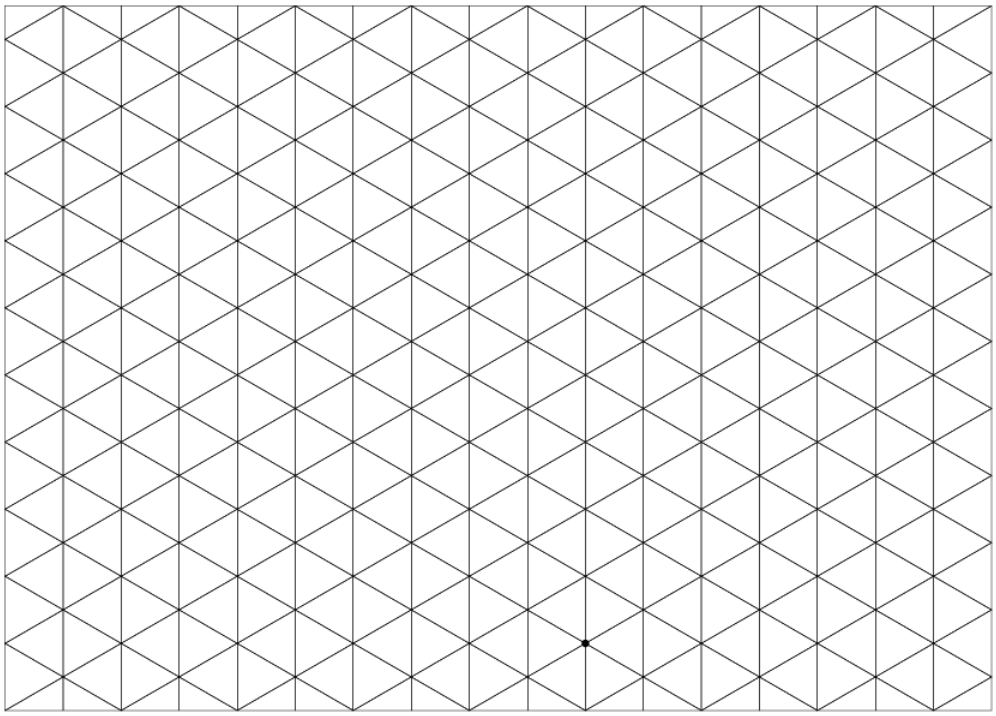

5.3: Make Isometric Sketches is shared under a CC BY 4.0 license and was authored, remixed, and/or curated by LibreTexts.

- **7.3: Practice 3: Make Isometric Sketches** is licensed CC BY 4.0.

CHAPTER OVERVIEW

6: Orthographic Projection

6.1: Visualization of Orthographics Projections
6.2: Auxiliary Views
6.3: Sectional Views
6.4: Make orthographic sketches
6.5: Make an orthographic three-view, fully dimensioned sketch of a simple object

6: Orthographic Projection is shared under a CC BY 4.0 license and was authored, remixed, and/or curated by LibreTexts.

6.1: Visualization of Orthographics Projections

Single View

A single view of an object is sometimes all that is needed for a complete visual explanation. When dimensions, material, and other information are included, an object requiring only a single view is easy to understand.

Most one-view drawings are of flat objects, made from materials such as sheet metal and gasket stock. Spherical objects, such as a cannonball, would require only one view and a note indicating the material and diameter of the sphere.

The object shown in the one-view drawing below could be made of any appropriate material that might be specified. In appearance, it is much like the gasket used as part of the cooling system on many cars. All that would need to be noted is the material type and thickness required.

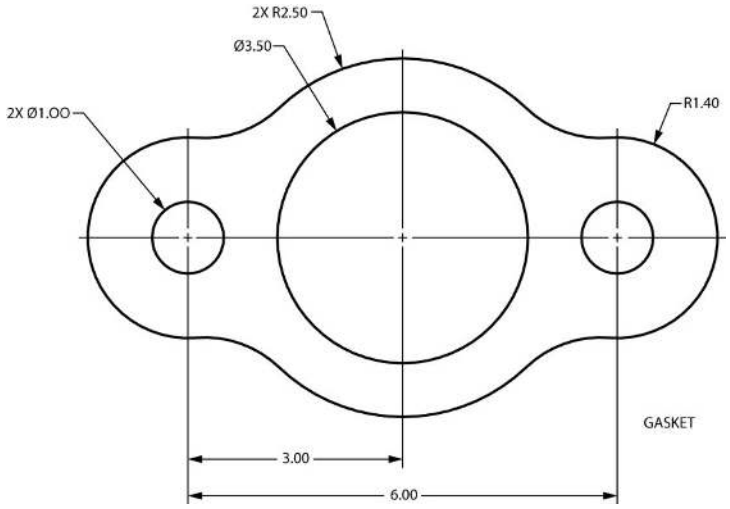

Figure **6.1.1**: A single view of a flat gasket.

Two View

Sometimes “two-view” drawings are used on prints. Two views may be all that is needed to show the shape of an object. Objects that are cylindrical, such as a length of pipe, are usually shown on a print with two views. In such a case, two views are sufficient to explain the shape. Notice in the two-view drawing shown below that the length of the pipe is shown in one view, while the diameter is called out in the other. Without the view on the right, what might this shape be mistaken for? Square tube, channel…

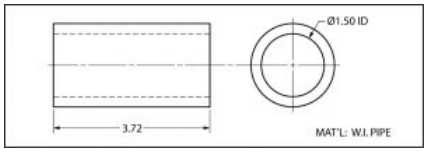

Figure **6.1.2**: A two-view drawing of a pipe.

Three View

The most common orthographic projection drawings usually have three views. The three views selected are the top, front, and right side for the third angle projection used commonly in North America. It is possible, of course, to select other views such as the left side or bottom, but you should have a good reason to do so. Generally, though, it’s the top, front and right side that are traditionally seen by the person reading prints.

Since most prints make use of the orthographic projection system, and because the top, front, and right side views are most often used, it is important that you have their order, or arrangement on the print fixed in your mind. To help you understand this system, think of a chalkboard eraser, a short length of 2″ x 4″ lumber, or a common brick that looks like Figure **6.1.3**.

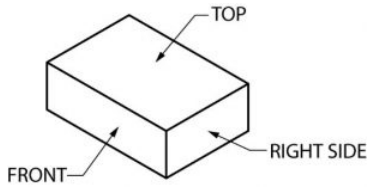

Figure **6.1.3**: An isometric view of a simple block.

When seen on a print, using orthographic projection, it would appear like this.

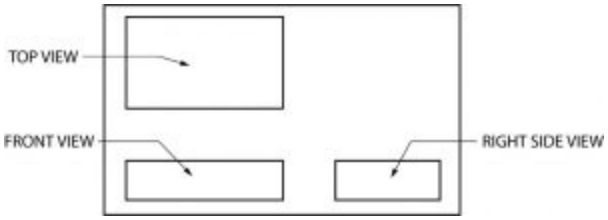

Figure **6.1.4**: An orthographic projection of a simple block.

This system of orthographic projection may be difficult to understand or visualize at first, but you will grasp it with some practice. Here's a basic example of how it works, using a simple object.

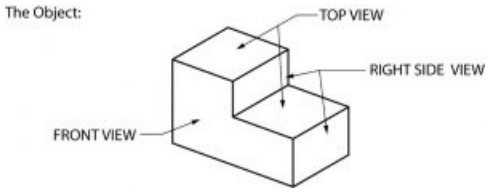

Figure **6.1.5**: An isometric view of a stepped block.

Orthographic projection does not show depth, so the object shown above will appear flat. With practice, however, you will learn to scan the three views and "read" depth into them. Remember that the location of the top, front, and right side views does not change. The projection lines between the orthographic views in Figure **6.1.6** show the height, width, and depth relationship that exists between each view and the other two views.

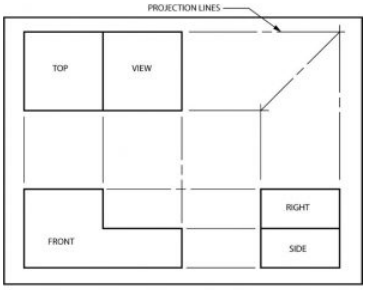

Figure **6.1.6**: An orthographic project of a stepped block.

In case you did not understand the three-view on the last page, let's take another look at the same thing. This time numbers will be used for the identification of the surfaces.

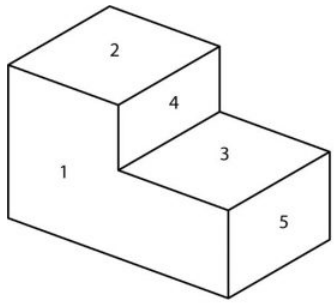

Figure **6.1.7**: An isometric view of a stepped block with the surfaces numbered.

Using orthographic projection, the object with the surfaces numbered appears like this:

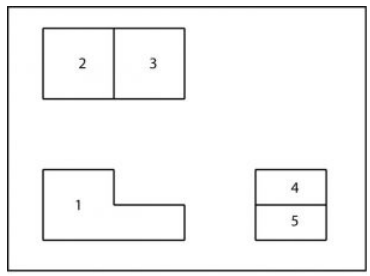

Figure **6.1.8**: Orthographic projection of the stepped block with the surfaces numbered for reference.

Notice that the front view (1) is the key to the drawing because it most clearly shows the shape of the object. It tells you the object is “L” shaped from the front. The other two views don’t tell you much by themselves. By looking at surface 1, however, you can see that 2 is taller than 3. Therefore, in “reading” the surfaces, 2 should appear to be closer to you than 3.

? Exercise 6.1.1

Now, look at 4 and 5. Which surface is projected closest to you?

Answer

Surface 5

Now draw a simple box and tape all sides together to form a cube. The cube will be 2”x 2”x 2”. Once the instructor has approved your drawing you will proceed to cut out and tape edges together to form a cube.

Visualization **Quiz**

Directions:

All visible surfaces on the objects shown are numbered. To complete this quiz, you are to place those numbers on the corresponding surfaces of the orthographic drawings.

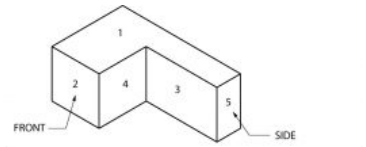

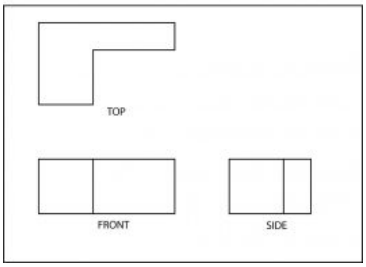

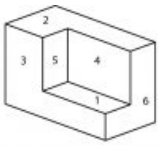

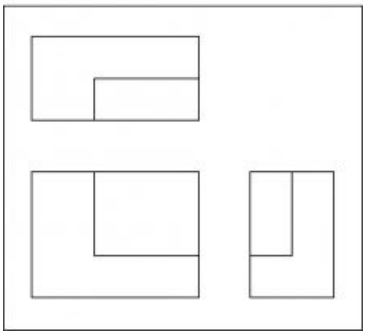

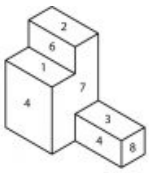

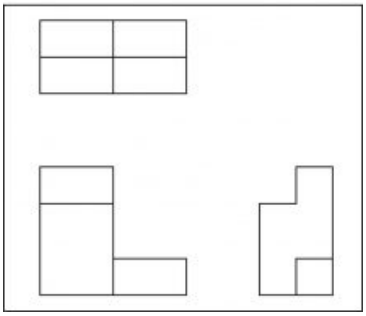

You may be wondering at this point why something like orthographic projection is used on prints when isometric or oblique drawings are so much easier to visualize. The answer is that both of those types of pictorials are used for relatively uncomplicated drawings. When an object is complex, however, neither can equal the orthographic system for clear presentation of dimensions, notes, and configuration details.

Hidden Surfaces

Another advantage of orthographic projection is that it allows the person reading the print to have the ability to see the inside, or surfaces of an object which normally could not be seen.

With complicated objects this can become very useful.

In the drawing below, the hidden line in the right side view represents the entire surface of the flat area between the two higher sides.

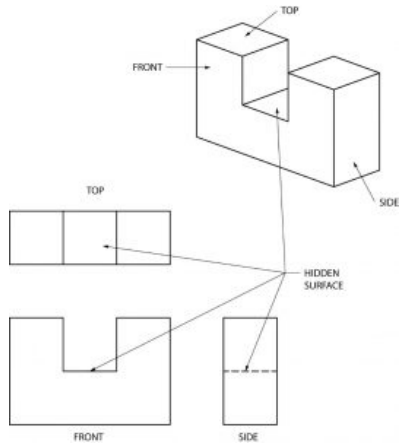

In this example, the hidden lines result from a square hole through the middle of the object.

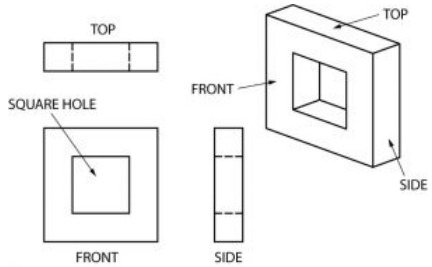

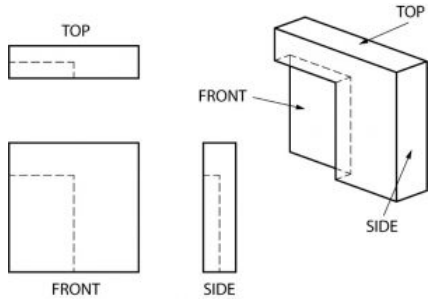

The hidden lines in this example are there because a part of one corner of the front surface was cut away, or “recessed.

Hidden Surfaces

Directions: Draw the hidden lines which are missing in the views below. Each problem has one incomplete view.

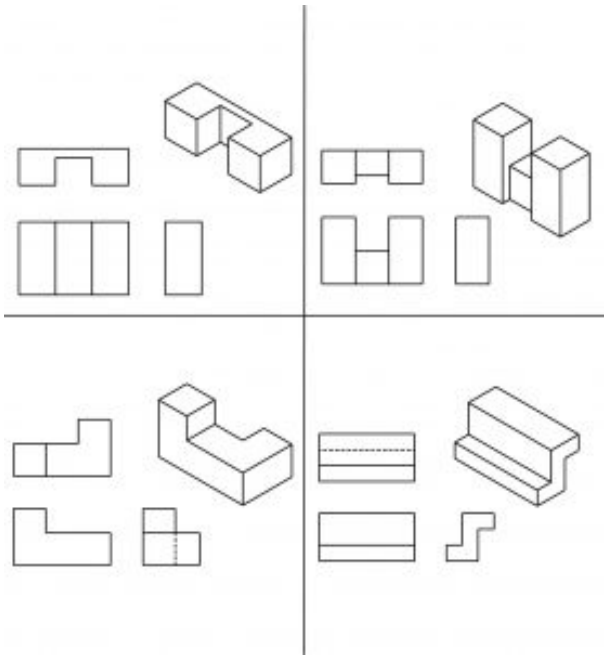

Curved Surfaces

Curved surfaces are perhaps tricky to “see” until you remember that the curve is only shown in one view. You must put the curve in the other views yourself, through visualization. Try to think that when there is a sharp change of direction like at a corner, then that will produce a line visible in another view. When the change of direction is smooth like a curve, no line will be seen.

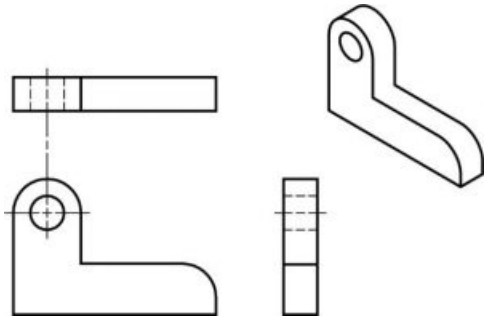

Here’s another example of curved surfaces:

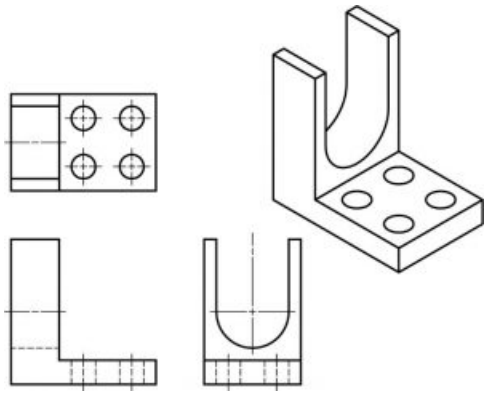

Curved surfaces exercise.

Directions: Draw the lines which are missing in the views below. Each problem has one incomplete view. Do not draw center lines.

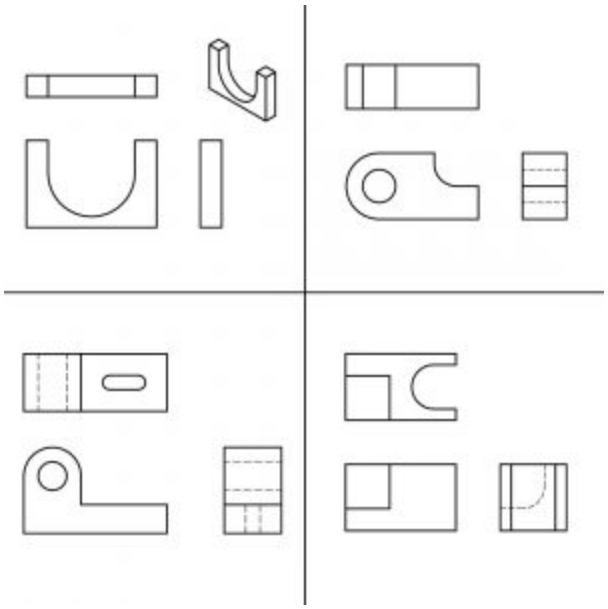

Inclined Surfaces

Inclined surfaces are those which are at an angle, or slanted. In other words, they are surfaces which are neither horizontal nor vertical. In viewing orthographic drawings you need to be alert to angles and inclined surfaces, for they are often found on the prints you will be reading later.

Notice the hidden line in the right view created by the inclined surface on this object:

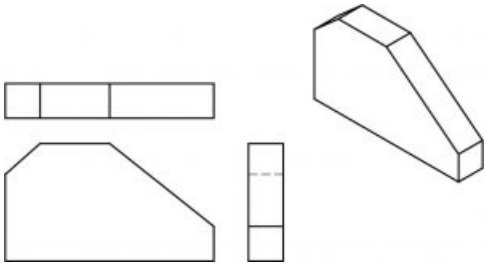

Here is an object with two inclined surfaces.

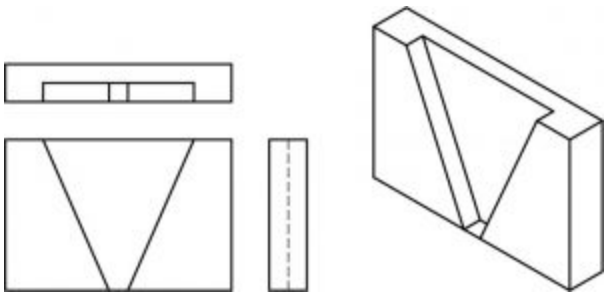

Inclined surfaces exercise

Directions: Draw the lines which are missing in the views below. Each problem has one incomplete view.

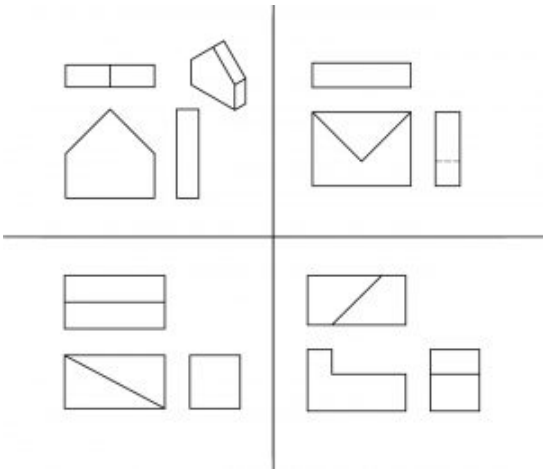

This page titled 6.1: Visualization of Orthographics Projections is shared under a CC BY 4.0 license and was authored, remixed, and/or curated by Ric Costin (OpenOregon) .

- **1.2: Visualization** by Ric Costin is licensed CC BY 4.0. Original source: https://openoregon.pressbooks.pub/blueprint.

6.2: Auxiliary Views

When an object has a slanted or inclined surface, it usually is not possible to show the inclined surface in an orthographic drawing without distortion. To present a more accurate description of any inclined surface, an additional view, known as an auxiliary view, is usually required.

An auxiliary view is simply a “helper” view, which shows the slanted part of the object as it actually is. It turns, or projects, the. object so that the true size and shape of the surf ace (or surfaces) are seen as they actually are.

Auxiliary views are commonly found on many types of industrial drawings.

Front View Auxiliaries

There are three basic type of auxiliary views. In the first type, the auxiliary view is projected from the front view of a three view (orthographic) drawing. In the second and third types of drawings, the auxiliary views are projected from the top and side views.

Here is a front view auxiliary of a simple object with an inclined surface.

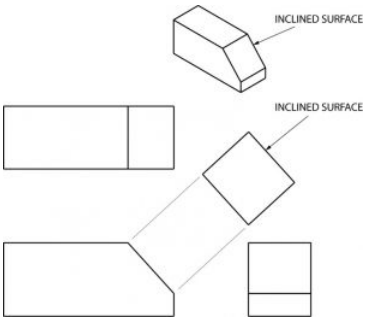

Notice that the projection lines are perpendicular to the slanted surface of the first view, and that only the slanted surface of the object is shown in the auxiliary view. · The rest of the object is omitted, however, for clarification portions of the adjacent· surfaces are sometimes shown. Also, notice that the slanted surfaces of the top and side views are shortened because of distortion, whereas the surface of the auxiliary view is true, or actual size.

To sketch an auxiliary view, you begin with orthographic. views of the object and add projection lines perpendicular (90˚) to the slanted surface, adding a reference line any convenient distance from the view with the slanted surface.

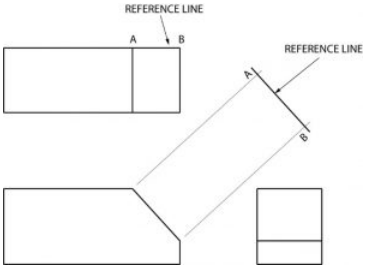

Next, the distance CB on the auxiliary view is made the same length as the related distance in one of the orthographic views; in this example it’s the side view. This completes the auxiliary view.

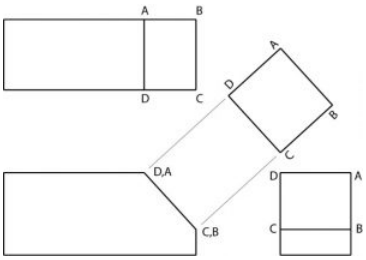

Top View Auxiliaries

A top view auxiliary is developed in the same way as a front view auxiliary, except that the auxiliary is projected from the top view.

Whether the auxiliary view is to be projected from the front, top, or side view depends on the position of the object, or which surface of the object is slanted. In this example, the top view is slanted. Therefore the auxiliary view must be projected from the top view.

Again, notice how the angled surfaces shown in the front and side views are not shown in true length.

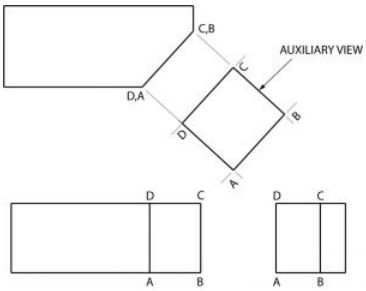

Side View Auxiliary

Side view auxiliaries are drawn in the same way as front and top view auxiliaries. Again, where the auxiliary view is to be projected depends upon the position of the object or which surface of the object is slanted.

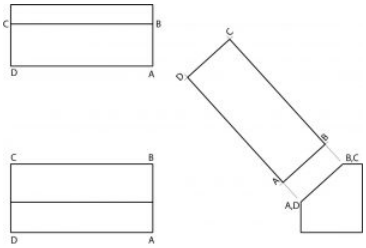

Obviously, these are very basic auxiliary view examples and are presented to introduce you to the concept of auxiliary views.

As objects with inclined surfaces become more complex, auxiliary views provide a means of presenting objects in their true size and shape.

Sketching Auxiliary Views

The following problems require and auxiliary view to be complete. Sketch the auxiliary views required in the spaces provided.

Drawing practice 1

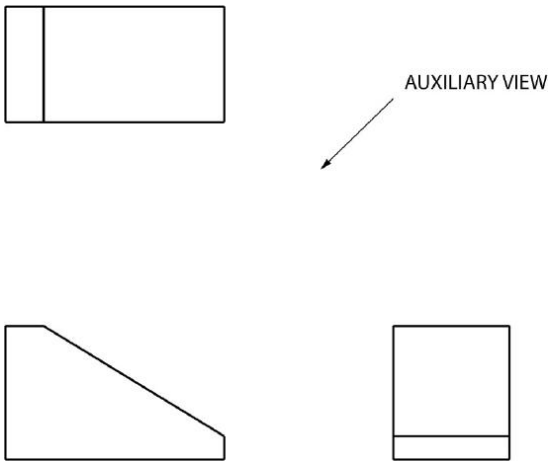

Drawing practice 2

In this problem, a round hole is centered on the slanted surface and drilled through the object. The hole appears elliptical in the. front and side views because of distortion. It will appear in its true shape on the auxiliary view. Remember that the auxiliary is developed from the view with the slanted surface. Complete the auxiliary view.

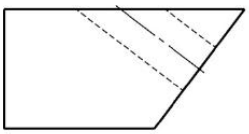

Drawing practice 3

In this problem, a square hole has been cut part way into the object. Complete the auxiliary view.

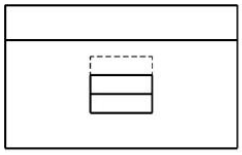

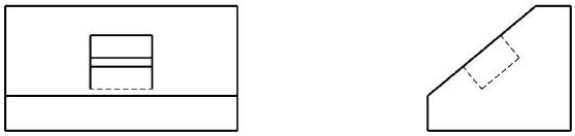

Quiz

Directions: Complete the auxiliary view in the space provided.

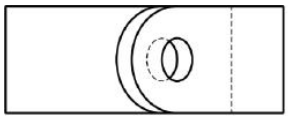

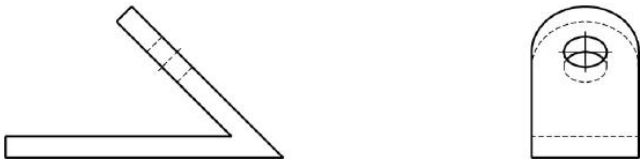

This page titled 6.2: Auxiliary Views is shared under a CC BY 4.0 license and was authored, remixed, and/or curated by Ric Costin (OpenOregon)
.

- **1.6: Auxiliary Views** by Ric Costin is licensed CC BY 4.0. Original source: https://openoregon.pressbooks.pub/blueprint.

6.3: Sectional Views

You have learned that when making a multiview sketch, hidden edges and surfaces are usually shown with hidden (dash) lines.

When an object becomes more complex, as in the case of an automobile engine block, a clearer presentation of the interior can be made by sketching the object as it would look if it were cut apart. In that way, the many hidden lines on the sketch are eliminated.

The process of sketching the internal configuration of an object by showing it cut apart is known as sectioning. Sectioning is used frequently on a wide variety of Industrial drawings.

In this example, blocks A and B result after the block in figure 1 has been “Sectioned”. When you cut an apple in half you have sectioned it. Just as an apple can be sectioned any way you choose, so can an object in a sectional view of a drawing or sketch.

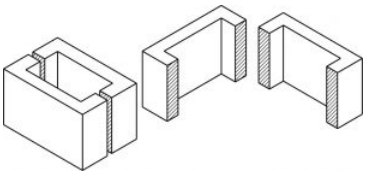

Cutting Plane

A surface cut by the saw in the drawing above is a cutting plane. Actually, it is an imaginary cutting plane taken through the object, since the object is imagined as being cut through at a desired location.

Cutting Plane Line

A cutting plane is represented on a drawing by a cutting plane line. This is a heavy long-short-short-long kind of line terminated with arrows. The arrows in show the direction of view.

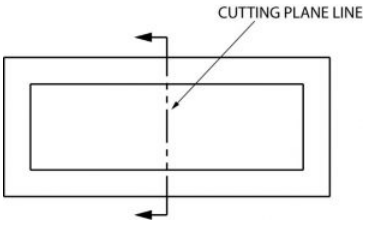

Once again, here is an graphic example of a cutting plane line and the section that develops from it.

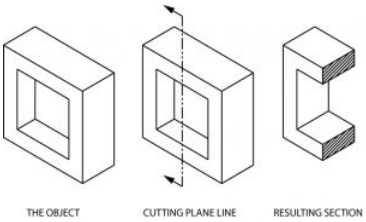

Section Lining

The lines in the figure above, which look like saw marks, are called section lining. They are found on most sectional views, and indicate the surface which has been exposed by the cutting plane. Notice that the square hole in the object has no section lining, since it was not changed by sectioning.

Different kinds of section lining is used to identify different materials. When an object is made of a combination of materials, a variety of section lining symbols makes materials identification easier. Here are a few examples:

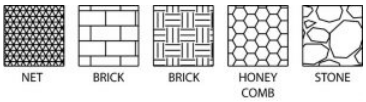

Section lines are very light. When sketching an object or part that requires a sectional view, they are drawn by eye at an angle of approximately 45 degrees, and are spaced about 1/8” apart. Since they are used to set off a section, they must be drawn with care.

It is best to use the symbol for the material being shown as a section on a sketch. If that symbol is not known, you may use the general purpose symbol, which is also the symbol for cast iron.

Full Sections

When a cutting plane line passes entirely through an object, the resulting section is called a full section Fig. 7 illustrates a full section.

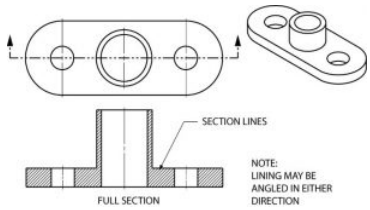

It is possible to section an object whenever a closer look intentionally is desired. Here is an object sectioned from two different directions.

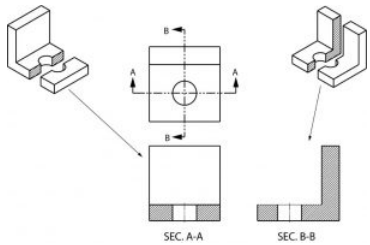

Half Sections

If the cutting plane is passed halfway through an object, and one-quarter of the object is removed, the resulting section is a half section. A half section has the advantage of showing both inside and outside configurations.

It is frequently used for symmetrical objects. Hidden lines are usually not shown on the un-sectioned half unless they are needed for clearness or for dimensioning purposes. As in all sectional drawings, the cutting plane take precedence over the center line.

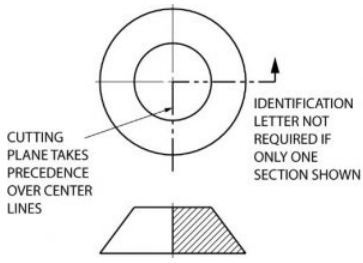

Here is another example of a half section. Remember that only one fourth of the object is removed with a half section, whereas half of the object is generally removed with a full section.

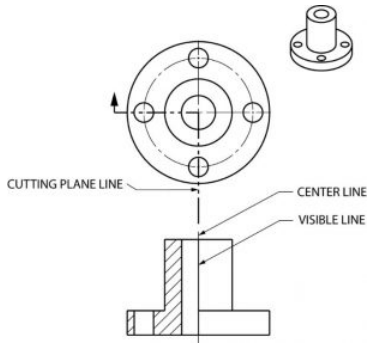

This manufacturer's drawing, using both full and half section, illustrates the advantages of sectional views. The different line directions indicate different parts and materials used in the assembly of this valve.

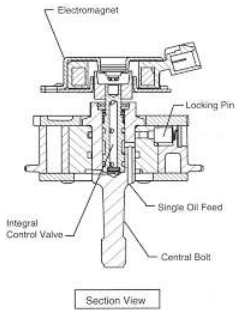

Quiz

Directions: On a separate sheet of paper, complete the section view.

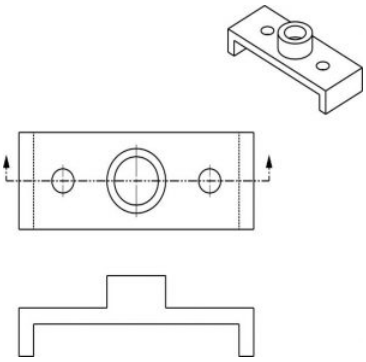

Broken Out Sections

In many cases only a small part of a view needs to be sectioned in order to show some internal detail. In the figure below, the broken out section is removed by a freehand break line. A cutting plane line does not need to be shown, since the location of the cut is obvious.

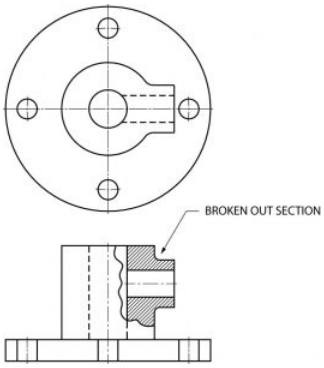

Revolved Sections

A revolved section shows the shape of an object by rotating a section 90 degrees to face the viewer. The three revolved sections illustrated in the spear-like object of figure 12 show the changes that take place in its shape.

Offset Sections

An offset section is a means of including in a single section several features of an object that are not in a straight line. To do this, the cutting plane line is bent, or “OFFSET” to pass through the features of the part.

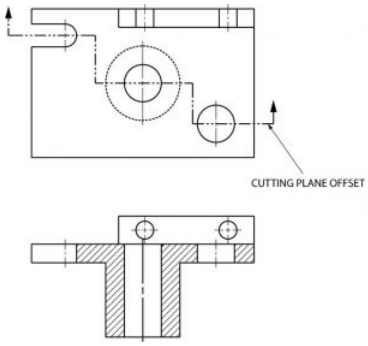

Removed Sections

A section removed from its normal projected position in the standard arrangement of views is called a “removed” section. Such sections are labeled SECTION A-A, SECTION B-B, etc., corresponding to the letter designation at the ends of the cutting plane line. Removed sections may be partial sections and are often drawn to a different scale.

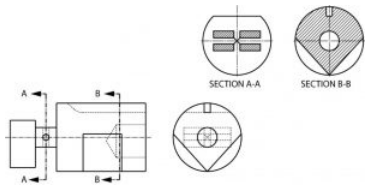

Quiz

Directions: Complete the half section view of a separate sheet of paper.

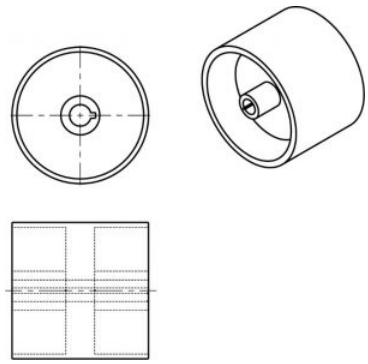

This page titled 6.3: Sectional Views is shared under a CC BY 4.0 license and was authored, remixed, and/or curated by Ric Costin (OpenOregon)
.

- **1.7: Sectional Views** by Ric Costin is licensed CC BY 4.0. Original source: https://openoregon.pressbooks.pub/blueprint.

6.4: Make orthographic sketches

Use sketching techniques to produce orthographic sketches of the following figures. For the purposes of these exercises, do not be concerned with dimensions. Concentrate on producing good, dark outlines, good circular shapes, and correctly drawn hidden and center lines.

1. Sketch one orthographic view of the object shown pictorially in Figure 6.4.1. Remember that the holes in the gasket are circular (not elliptical as they appear in the three-dimensional sketch shown). Add a title block with the following:

- Title: Gasket
- Sk. No.: D-1/031
- Sk. by: (your name)
- Date: (today's date)

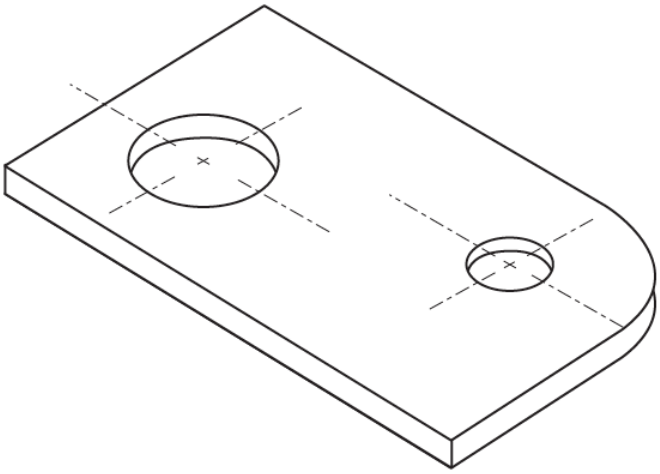

Figure 6.4.1: Gasket

2. Sketch two orthographic views (front view and top view), in the approximate scale of the object shown pictorially in Figure 6.4.2. Remember to place the views correctly and make sure that all hidden lines are clearly shown. Add a title block with the following:

- Title: Stop piece
- Sk. No.: D-1/032
- Sk. by: (your name)
- Date: (today's date)

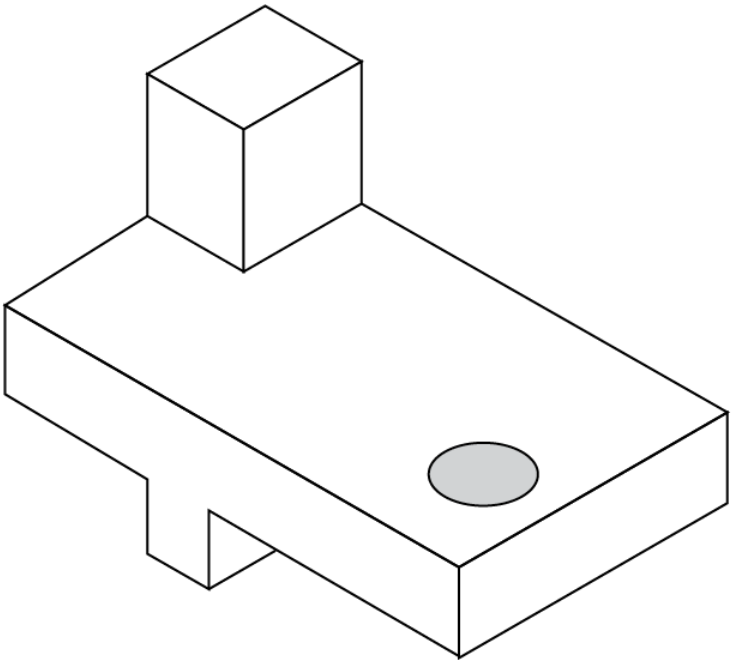

Figure 6.4.2: Stop piece

6.4: Make orthographic sketches is shared under a CC BY 4.0 license and was authored, remixed, and/or curated by LibreTexts.

- **7.1: Practice 1: Make orthographic sketches** is licensed CC BY 4.0.

6.5: Make an orthographic three-view, fully dimensioned sketch of a simple object

Sketch the necessary views of the object in the pictorial drawing below and dimension fully. Sketch to approximate scale to suit your sheet size.

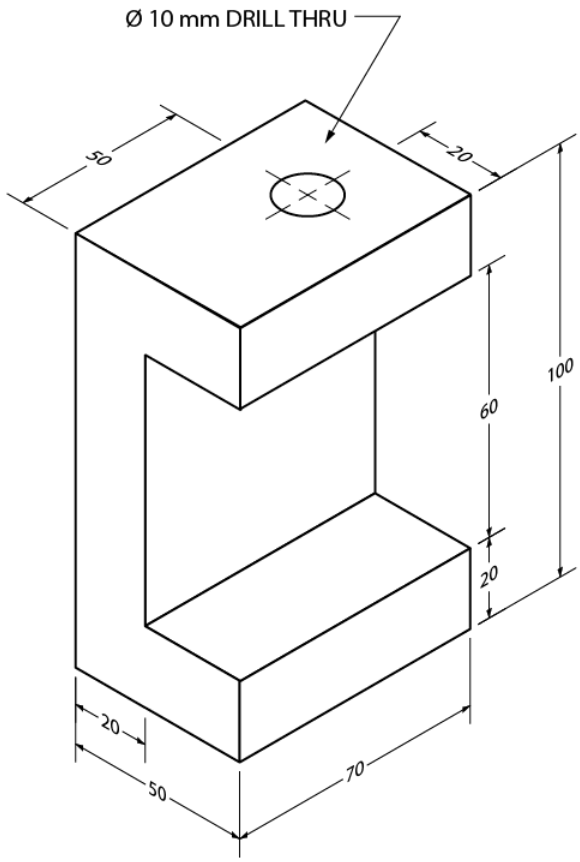

Add a title block with the following:

- Title: Clamp Bracket
- Sk. No.: D1/PC3
- Sk. by: (your name)
- Date: (today's date)

6.5: Make an orthographic three-view, fully dimensioned sketch of a simple object is shared under a CC BY 4.0 license and was authored, remixed, and/or curated by LibreTexts.

- **7.2: Practical 2: Make an orthographic three-view, fully dimensioned sketch of a simple object** is licensed CC BY 4.0.

CHAPTER OVERVIEW

7: Dimensioning

7.1: Scaling
7.2: Principles of Dimensioning
7.3: Dimensioning
7.4: Dimensioning Exercise

7: Dimensioning is shared under a CC BY 4.0 license and was authored, remixed, and/or curated by LibreTexts.

7.1: Scaling

Whether or not you need to review these fundamentals, there is one important thing to remember about getting measurements from a print. If you need a dimension that is unclear or is not given, do not measure the print! Since prints shrink, stretch, and may not be drawn to scale, you can easily come up with some very inaccurate dimensions.

Scale Measurement

A drawing of an object may be the same size as the object (full size), or it may be larger or smaller than the object. In mo.st cases, if it is not drawn full size, the drawing is made smaller than the object. This is done primarily for the convenience of the users of the drawings. After all, who wants to carry around a full size drawing of a locomotive? Obviously, with an object as small as a wristwatch, it would be necessary to draw to a larger scale.

A machine part, for example, may be half the size (1/2”=1”); a building may be drawn 1/48 size (1/4”=1’-0”); a map may be drawn 1/200 size (1”=100’-0”); and a gear in that wristwatch may be ten-times size (10”=1”).

There are numerous scales for different needs. Since each occupational group has their own frequently used scales, some practice or basics review will help you to work with the scales used in your technology.

Full Scale

Full scale is simply letting one inch on a ruler, steel rule, or draftsman’s scale equal one inch on the actual object. Rules of this kind are usually divided into 1 /16” or 1 /32” units. The first measurement exercise will be with full size. If you can measure accurately in full scale, you may want to skip ahead.

Here is a “big Inch”. Each space equals 1/32”. If you have not worked with accurate measurement, spend some time studying it.

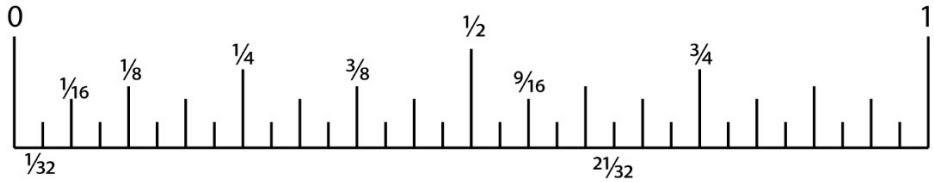

Measurement practice: on the scale above, locate the following fractions:

1. 5/8	1. 7/8
2. 3/16	2. 11/16
3. 7/32	3. 5/16
4. 15/16	4. 31/32
5. 25/32	5. 19/32

Directions:

Each of the fractions below is numbered. Write that number above the scale and point with an arrow where the fraction is located. Number 1 has been completed.

1. 2 3/32	4. 2 7/8	7. 1 9/32	10. 1 1/8
2. 1/4	5. 1 15/32	8. 15/16	11. 25/32
3. 9/16	6. 2 7/16	9. 2 5/8	12. 1 13/16

Half Size

The principle of half size measurements on a drawing is simply letting a unit, such as 1/2” on the scale, represent a larger unit such as 1” on the drawing. If the drawing is properly labeled, the words HALF SIZE or 1/2″= 1′ will appear in the title block.

Using the half-size scale is not difficult, but it does take some practice. To measure a distance of 2-3/16” you look first for the 2, then go backwards to the zero and count off another 3/16. You measure this way for each dimension that has a fraction. Whole numbers (numbers without fractions) are measured in the usual way.

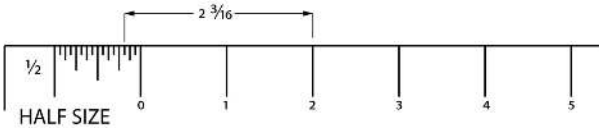

1. 4-3/16
2. 2-1/2
3. 5-3/4
4. 4-3/16
5. 2-1/2
6. 5-3/4

Next, locate a half size scale (available in the lab) and measure the lines· below to the nearest 1 /32 of an inch. Write the length of the line in the space provided.

1. _____ _____

2. _____ _____

3. _____ _____

4. _____ _____

5. _____ _____

6. _____ _____

Because paper is dimensionally unstable due to humidity, exact answers to this half size measurement practice cannot be given. That is another reminder that it’s poor practice to measure from a piece of paper.

Quarter Size

Quarter size is used and read in a similar way to half size except that each unit, such as a quarter of an inch, represents a larger unit, such as one inch. If the drawing is properly labeled the words QUARTER SIZE, QUARTER.SCALE, or 1/4″ = 1″ will appear in the title block.

The quarter size scale is used in a similar manner as the half size scale.

For quarter size practice, draw lines in the area provided to the required length. Have another student or the lab instructor check your lines for accuracy. (A ¼”=1” scale is available in the lab.)

1. 1”
2. 4”
3. 7 1/4”
4. 16 3/8”
5. 5 3/16”
6. 13”
7. 10 7/8”
8. 2 5/16”

Quiz

For this quiz, you will be given an object to measure with a ruler or tape measure. You will record measurements in full scale and then draw each length in ½ and ¼ scale.

This page titled 7.1: Scaling is shared under a CC BY 4.0 license and was authored, remixed, and/or curated by Ric Costin (OpenOregon) .

- **1.4: Scaling** by Ric Costin is licensed CC BY 4.0. Original source: https://openoregon.pressbooks.pub/blueprint.

7.2: Principles of Dimensioning

A good sketch of an object is one that you can use as a blueprint to manufacture the object. Your sketch must show all the necessary dimensions of the part, locate any features it may have (such as holes and slots), give information on the material it is to be made from, and if necessary, stipulate the processes to be used in the manufacture of the object.

Three principles of dimensioning must be followed:

1. Do not leave any size, shape, or material in doubt.
2. To avoid confusion and the possibility of error, no dimension should be repeated twice on any sketch or drawing.
3. Dimensions and notations must be placed on the sketch where they can be clearly and easily read.

Consider Figure 7.2.1 and note whether these three dimensioning principles have been followed.

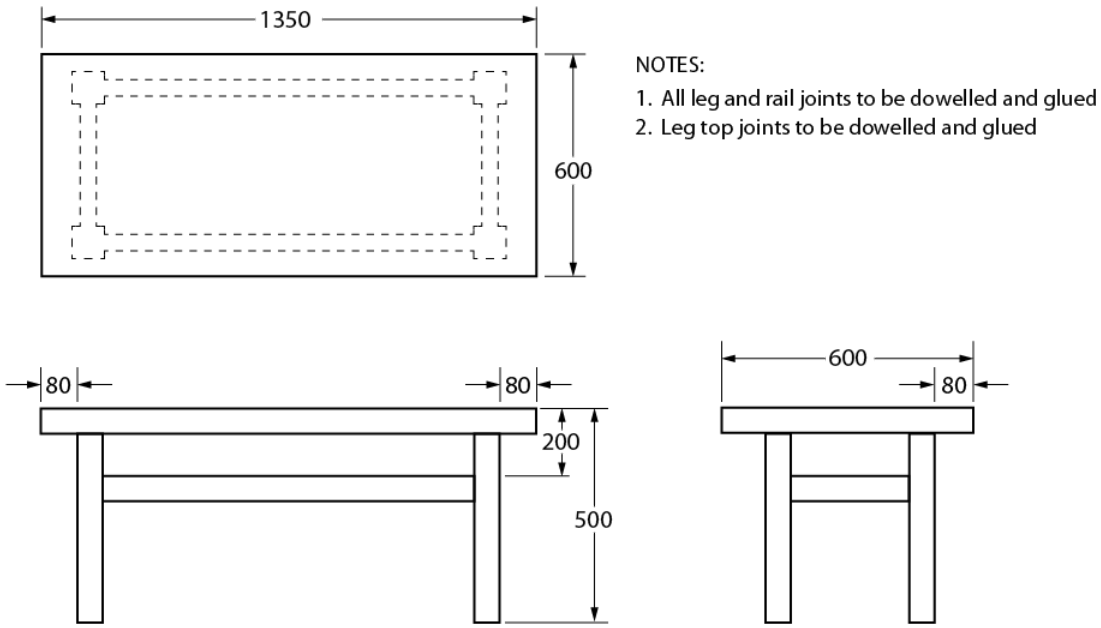

Figure 7.2.1: Shop table

Although the dimensions and notations are clear and easy to read in Figure 7.2.1, the following points should be made:

- Leg and rail sizes have not been shown.
- The thickness of the top has not been given.
- The material has not been given as a notation.
- The 600 dimension has been repeated.
- The type of finish to be used has not been given.
- Note 2 is redundant.

The sketch of the shop table is far from complete, and the table could not be made without a lot of guesswork. Figure 7.2.2, on the other hand, shows a completed sketch that, along with the necessary notes and dimension information, can be readily used for construction purposes.

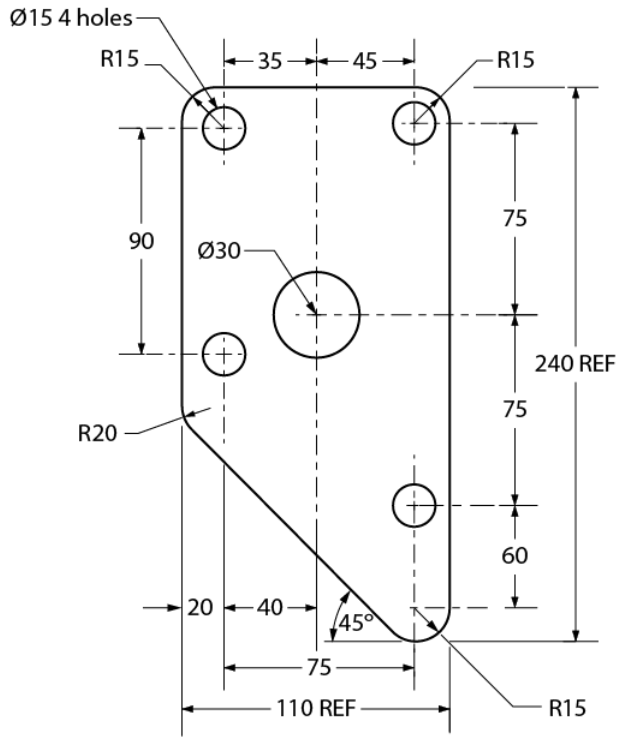

Figure 7.2.2: Dimensioning

Rules of dimensioning

For most objects, there are three types of dimensions:

- size dimensions
- location dimensions
- notation dimensions

Figure 7.2.3 illustrates the difference between size and location dimensions. (S = size dimension and L = location dimension).

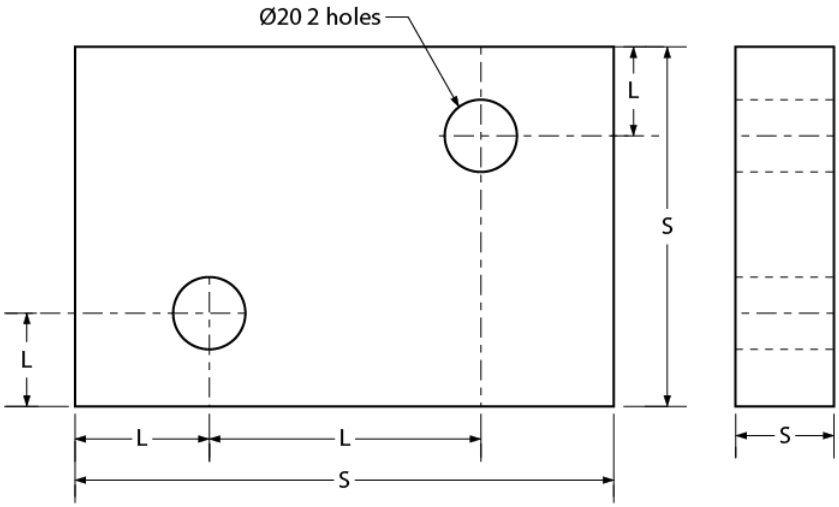

Figure 7.2.3: Shim Plate

Size dimensions are necessary so that the material size of the object can be determined. Location dimensions are necessary so that parts, holes, or other features can be positioned in or on the object. Notation dimensions describe the part, hole, or other feature with a short note, such as the “ø20 2 holes” notation (see Figure 16). Keep these points in mind:

- Keep all dimension lines at least 10 mm (3/8") clear of object lines wherever possible.

- Try to group related dimensions rather than scattering them.
- Try to keep dimensions off the views themselves.
- Separate one line of dimensions from another line of dimensions or from a notation by a space of at least 10 mm (3/8").
- Leave a space of approximately 3 mm (1/8") between the object outline and the beginning of any extension line.
- Keep arrowheads slim and neat.
- Never dimension to a hidden line.
- Draw leader lines at an angle when intersecting object lines to avoid confusing them with extension lines.

Figure 7.2.4 illustrates good placement of dimensions and notations. Note the placement of extension lines and the use of center lines to locate features such as holes. Also, note the shape and size of arrowheads.

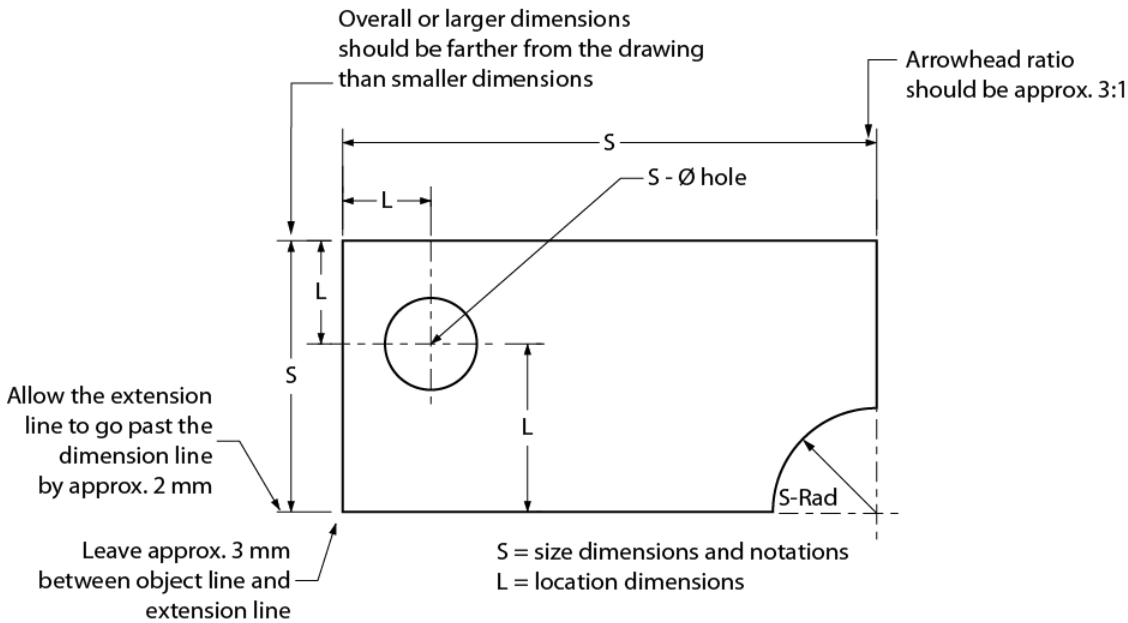

Figure 7.2.4: Extension line usage

Dimensioning systems

Two systems are used for dimensioning drawings. They are aligned and unidirectional systems. Figure 7.2.5 shows examples of both systems. As you can see, the aligned system requires that you turn the drawing on its side, whereas the unidirectional system may be read from the normal reading position. For most drawings, the unidirectional system is preferred, as it is easier to read; however, architectural drawings still use the aligned system.

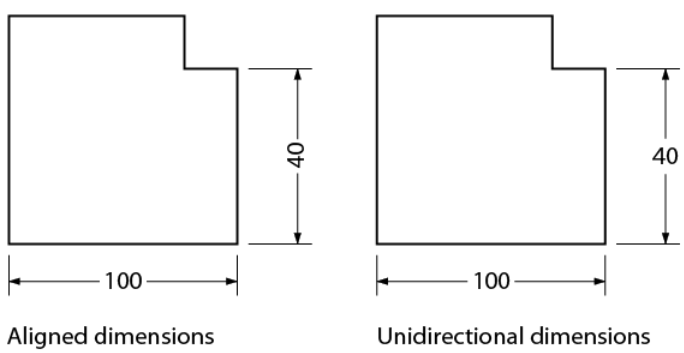

Figure 7.2.5: Dimensioning systems

Systems of measurement

You may be required to sketch or read drawings constructed with either metric (SI) or imperial dimensions. You may also encounter drawings that are dual-dimensioned and contain both systems of measurement on the same drawing.

SI system of measurement

The SI system of measurement has become the official standard in Canada. It is common practice on shop drawings to express all metric dimensions in millimeters. Figure 7.2.6 shows a detail drawing of a connector arm using metric measurements. All metric drawings should contain a note specifying that all dimensions are in millimeters.

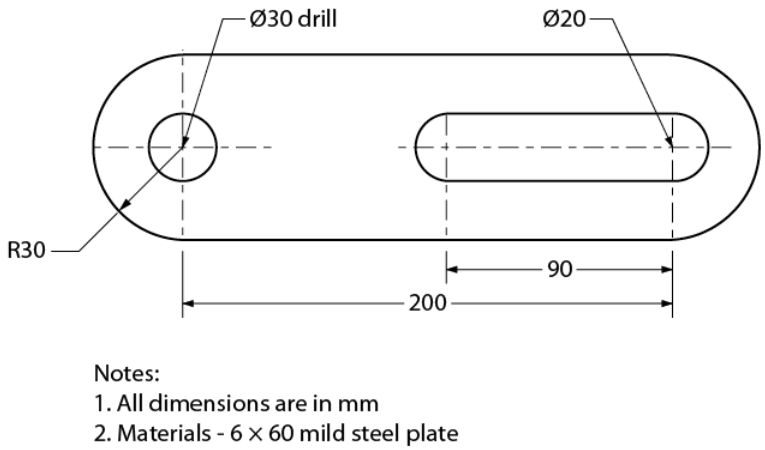

Figure 7.2.6: Connector arm – metric measurement

Imperial system of measurement

An imperial drawing may use the decimal-inch system, the fractional-inch system, or feet and inches.

- In the decimal-inch system, very accurate dimensions for items such as machine parts are expressed as decimals of an inch, such as 0.005". In words, this reads as five one-thousandths of an inch.
- In the fraction-inch system, dimensions for things such as steel and lumber sizes are expressed as inches and fractions of an inch from as small as 1/64" (Figure 7.2.7). Most drawings that are dimensioned in the imperial system will use the fraction-inch system.

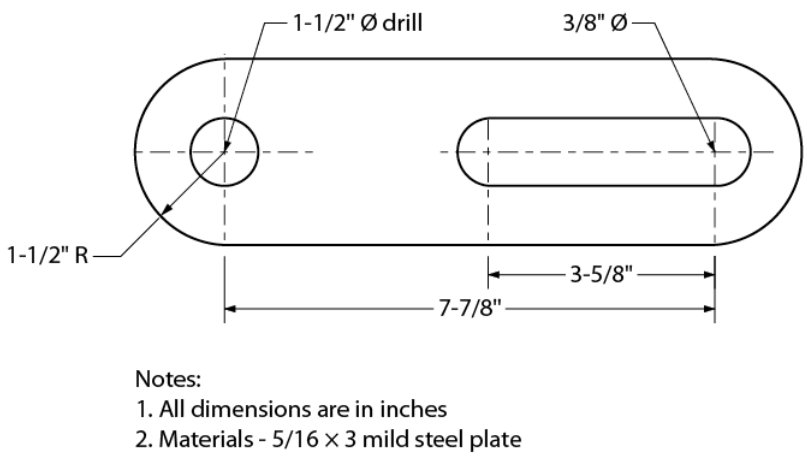

Figure 7.2.7: Connector arm – imperial measurement

In the feet-inch system (Figure 7.2.8), the dimensions of large structures such as machine frames and buildings are expressed in feet and inches, such as 2'-6" (two feet, six inches).

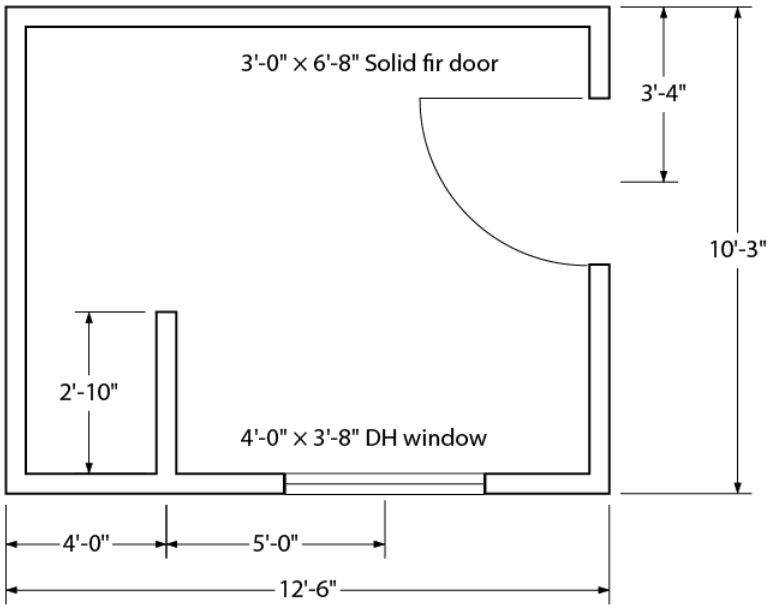

Figure 7.2.8: Fuel storage shed

Dimensioning orthographic sketches

The following are rules and procedures for dimensioning single- and multi-view sketches:

- Place dimensions on views that show parts of features as solid outlines. Avoid dimensioning hidden lines wherever possible.
- Try to keep dimensions between views. Leave adequate room between views when you begin your sketch.
- Keep the smallest dimensions nearest to the object outline.
- Diameters in metric measurement should be denoted on a sketch using the symbol ø (e.g., ø20 – 2 holes). A radius should be denoted using the letter R (e.g., R 25).
- Diameters in imperial measurements may be denoted on a sketch by the symbol ø or the abbreviation DIA (e.g., 3" ø DRILL or 4½" DIA). A radius may be denoted using the letter R or the abbreviation RAD (e.g., 3" R or 6½" RAD).
- Arrows carrying notations should always point toward the center of circular objects.
- Arrows should always point toward a circle center when dimensioning a diameter and away from the center when dimensioning a radius.

7.2: Principles of Dimensioning is shared under a CC BY 4.0 license and was authored, remixed, and/or curated by LibreTexts.

- **2.4: Principles of Dimensioning** is licensed CC BY 4.0.

7.3: Dimensioning

If a drawing is to be complete, so that the object represented by the drawing can be made as intended by the designer, it must tell two complete stories. It tells this with ***views***, which describe the shape of the object, and with ***dimensions and notes***, which gives sizes and other information needed to make the object.

Therefore, your next step is to learn the basics of dimensioning. In that way you will understand not only how to interpret a drawing to get the information you need, but also how to dimension your sketches so that they can be used to communicate size information to others.

Numerals

It may seem a bit basic, but a few exercises with the shapes of numbers comes before dimensioning. The reason for such review is simply that incorrectly or carelessly made numbers on a drawing or sketch can easily be misinterpreted by someone on the job. That can be costly.

Therefore, the study of numbers forms is justified.

The number forms presented here have been determined to be the most legible, and are used by industry nationwide. The United States standardized 1/8” vertical numbers are correctly formed as follows:

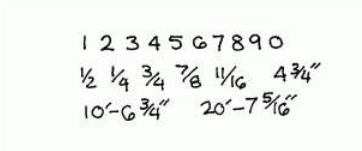

Dimension Lines

The dimension line is a fine, dark, solid line with arrowheads on each end. It indicates direction and extent of a dimension. In machine sketches and drawings, in which fractions and decimals are used for dimensions, the dimension line is usually broken near the middle to provide open space for the dimension numerals. In architectural and structural sketches and drawings, the numerals are usually above an unbroken dimension line.

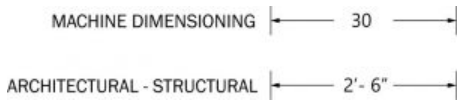

In either case, the dimension line which is closest to the object should be placed approximately

1/2″ away. The other dimensions beyond the first dimension (if any) should be approximately 3/8″ apart. You do not necessarily have to remember this, but you should remember not to crowd your dimension lines and to keep them a uniform distance apart.

The most important thing is that the drawing needs to be “clean” and dimensions need to be located in a space where they cannot be confused with a surface they are not intended to be used for.

Here is how dimension lines should be sketched:

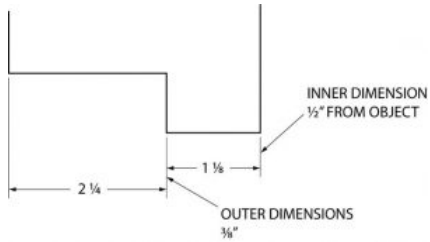

Note: Dimensions less than six feet (72 in.) are given in inches. Dimensions over six feet are usually shown in feet and inches. Be sure that it is clear how dimensions are called out. When calling out dimensions that are over 12”, make sure ALL of dimensions are called out in total inches or feet inches throughout the entire drawing. Either 4’-5” or 53”, they both mean the same thing but if there is a mix of dimensioning it can become easy to look at 4’-8” and see 48”.

Extension Lines

Extension lines on a drawing are fine, dark, solid lines that extend outward from a point on a drawing to which a dimension refers. Usually, the dimension line meets the extension line at right angles. There should be a gap of about 1 / 16″ where the extension line would meet the outline of the object, and the extension line should go beyond the outermost arrowhead approximately 1 /8″. Also, there should be not gaps where extension lines cross. Notice in this example the larger dimensions are correctly placed outside, or beyond the shorter dimensions, and that the dimensions are preferably not drawn on the object itself. Sometimes, however, it is necessary to dimension on the object.

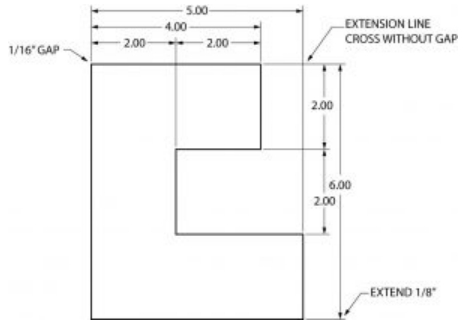

It is important to remember to place dimensions on the views, in a two or three view drawing, where they will be the most easily understood. Avoid dimensioning to a hidden line and avoid the duplication of dimensions. Use common sense; keep dimensions as clear and simple as possible. Remember, the person reading your drawing needs to clearly understand, beyond question, how to proceed. Otherwise, costly time and material will be wasted.

There are two basic methods of placing dimensions on a sketch. They may be placed so they read from the bottom of the sketch (unidirectional dimensions) or from the bottom and right side (aligned dimensions). The unidirectional system is usually best, because it is more easily read by workmen.

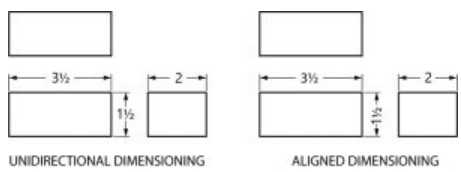

When dimensions will not fit in a space in the usual way, other methods are used to dimension clearly, when those crowded conditions exist.

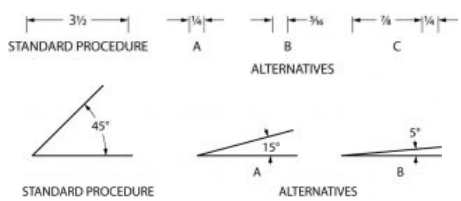

Arrowheads

Arrowheads are placed at each end of dimension lines, on leader lines, etc. Correctly made, arrows are about 1/8” to 3/16” in length, and are about three times as long as they are wide. Usually they have a slight barb, much like a fishhook.

To make your drawing look clean, use the same style throughout your drawing or sketch.

Dimension numerals

Numerals used to dimension an object are normally about 1/8” in height.

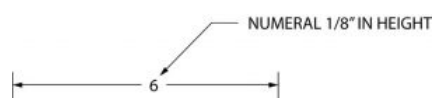

When a dimension includes a fraction, the fraction is approximately 1 / 4″ in height, making the fractional numbers slightly smaller to allow for space above and below the fractional line.

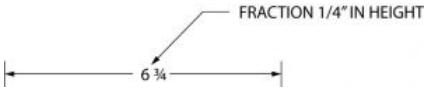

Again, it is particularly important that the numbers and fractions you may put on a sketch or drawing be legible. Sloppy numbers can cause expensive mistakes.

Notes

Notes are used on drawings to provide supplementary information. They should be brief and carefully worded to avoid being misinterpreted, and located on the sketch in an uncrowded area. The leader lines going to the note should be kept short. Notes are usually added after a sketch has been dimensioned to avoid interference with dimensions.

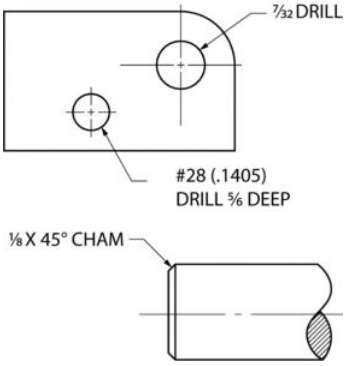

Quiz

Directions: Dimension the examples as indicated.

Dimension this 3 ¼ x 6 15/32 rectangle unidirectionally on the top and right sides.

With a note, show a 5/16 drilled hole.

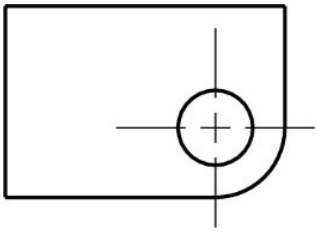

Dimension this object. The shorter lines are 3 inches in length.

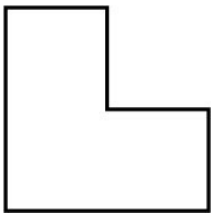

Dimension this object. Use a ruler or scale to determine the line lengths.

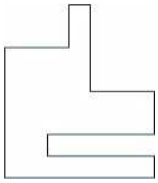

Oblique Dimensioning

Oblique dimensioning is mostly remembering to avoid dimensioning on the object itself (when possible) and the use of common sense dimensioning principles. It is also usually best to have dimensions read from the bottom (unidirectional) as shown here.

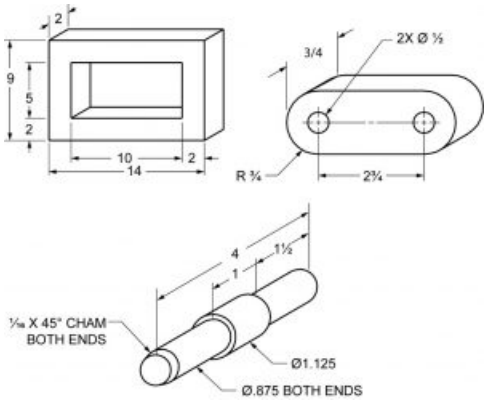

Although it is best not to dimension on the view itself, its usually accepted practice to place diameter and radius dimension on the views if space permits.

Sometime space and time is limited and you might have to bend the typical rules of drawing and dimensioning. The most important thing is to keep the drawing clean, concise, try to not a repeat dimensions but give all required ones.

Directions: Complete as indicated.

Dimension this three inch cube.

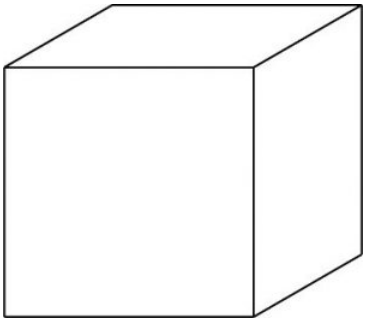

The shorter section of this rod is 5/8 inches in diameter by 2 1/8 inches long. The longer section is 7/8 inches in diameter by 3 ½ inches long. Dimension the drawing.

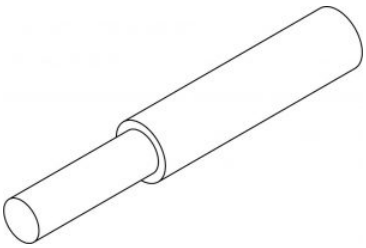

Isometric Dimensioning

When dimensioning an isometric sketch, it is important to keep dimensions away from the object itself, and to place the dimension on the same plane as the surface of the object being dimensioned. You will probably find that to dimension well in isometric will take some practice.

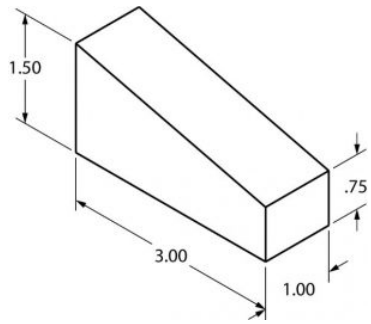

Place notes on an isometric drawing without regard to placing them on the same plane, as with dimensions. It is easier to do, and easier to read.

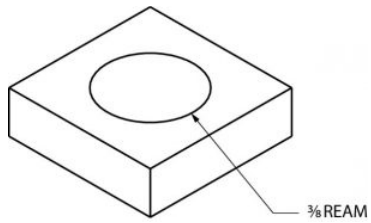

Isometric notes do not have to be on the same plane.

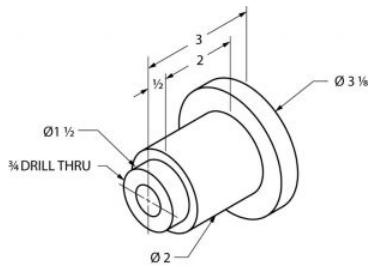

Notice in the example above that part of each leader line to the notes are sketched at an approximate angle of 15, 30, 45, 60 or 75 degrees. This is done to avoid confusion with other lines. **Never draw leader lines entirely horizontal or vertical**.

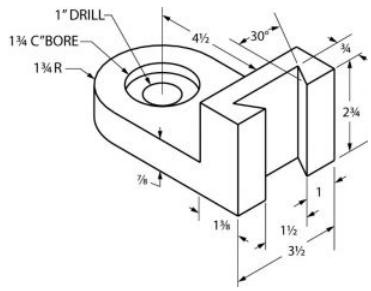

Quiz

Directions: complete as indicated.

Dimension this drawing. The dimensions are 3” long, 2 1/8” wide, 1 5/8” high with a 45◦ angle ½” deep. The angle begins as the midpoint of the 3” long dimension.

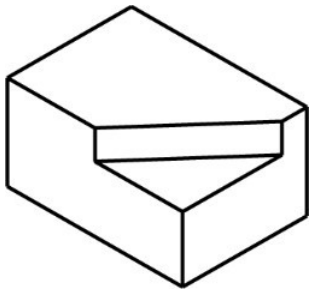

Dimension this drawing. The base is ½” x 1 ½” square. The cylinder is 1” ∅. x 1-1/8” long. The drilled through hole is ∅5/8”.

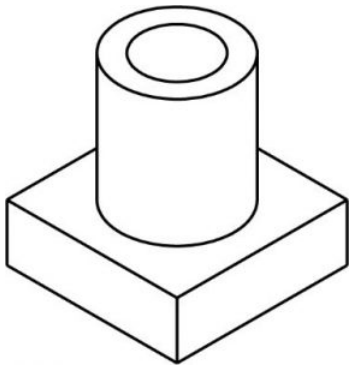

Quiz

Directions: You will be given an object to sketch and dimension.

Orthographic Dimensioning

When you look at the dovetailed object several pages back, it is easy to see that an isometric sketch can quickly become cluttered with dimensions. Because of this, more complicated sketches and drawings are dimensional in orthographic. This method provides the best way to dimension clearly and in detail.

Here are seven general rules to follow when dimensioning.

- Show enough dimensions so that the intended sizes can be determined without having a workman calculate or assume any distances.
- State each dimension clearly, so it is understood in only one way.
- Show dimensions between points, lines or surfaces which have a necessary relationship to each other or which control the location of other components or mating parts.
- Select or arrange dimensions to avoid accumulations of dimensions that may cause unsatisfactory mating of parts. (In other words, provide for a buildup of tolerances, as in the example below.

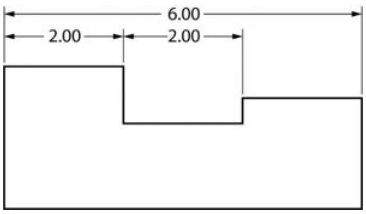

- Show each dimension only once. (Do not duplicate dimensions).
- Where possible, dimension each feature in the view where it appears most clearly, and where its true shape appears.
- Whenever possible, specify dimensions to make use of readily available materials, parts and tools.

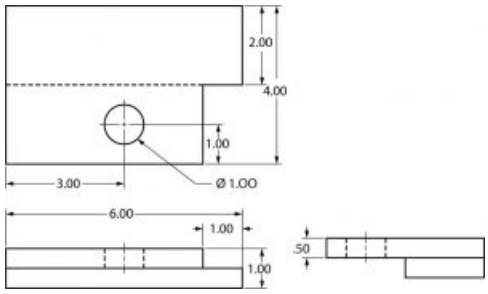

Notice the dimensions are correctly placed between the views, rather than around the outside edges of the drawing.

Quiz

Directions: one a separate piece of paper, make a dimensioned orthographic sketch of this object.

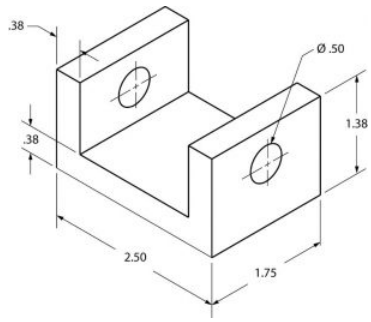

Directions: on a separate piece of paper, make a dimensional orthographic sketch of the object.

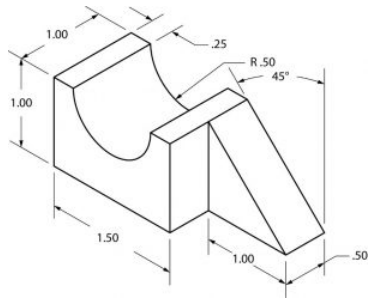

Quiz

Directions: You will be given an object to sketch and dimension.

This page titled 7.3: Dimensioning is shared under a CC BY 4.0 license and was authored, remixed, and/or curated by Ric Costin (OpenOregon) .

- **1.5: Dimensioning** by Ric Costin is licensed CC BY 4.0. Original source: https://openoregon.pressbooks.pub/blueprint.

7.4: Dimensioning Exercise

This final section introduces basic print reading. Because machine drawings are used to some extent in nearly every trade, the working drawings used in this section are all machine drawings.

The purpose of this package is to provide an opportunity to put your fundamental knowledge of print reading to use before you go on to more specialized and advanced print reading activities.

Exercise 1

Study the print below and fill in the related dimensions.

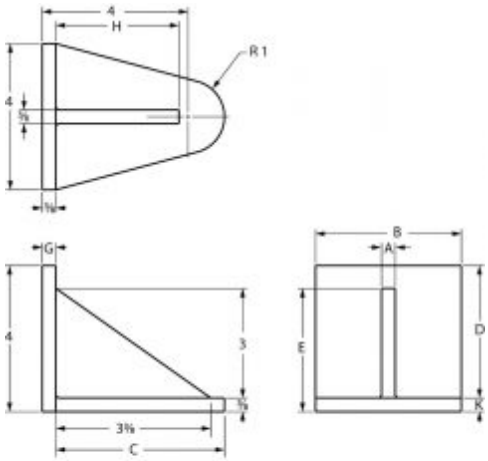

A = _____ E = _____
B = _____ G = _____
C = _____ H = _____
D = _____ K = _____

Exercise 2

Study the print below and fill in the related dimensions.

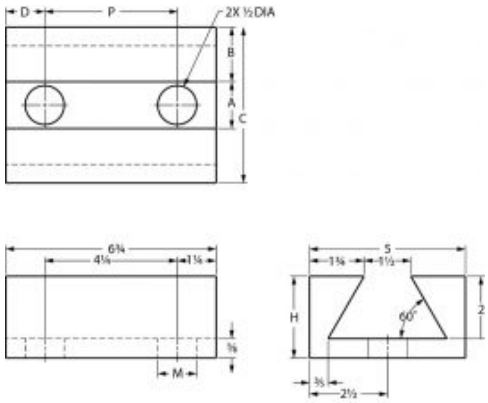

A = _____ H = _____
B = _____ K = _____
C = _____ M = _____
D = _____ P = _____

Exercise 3

Study the print below and fill in the related dimensions.

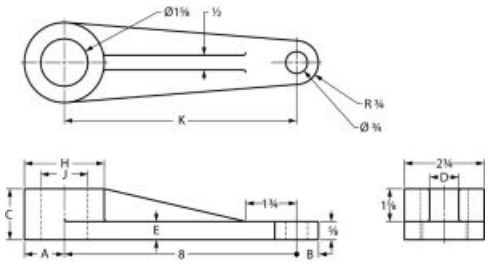

A = _____ E = _____
B = _____ H = _____
C = _____ J = _____
D = _____ K = _____

Exercise 4

Study the print below and fill in the related dimensions.

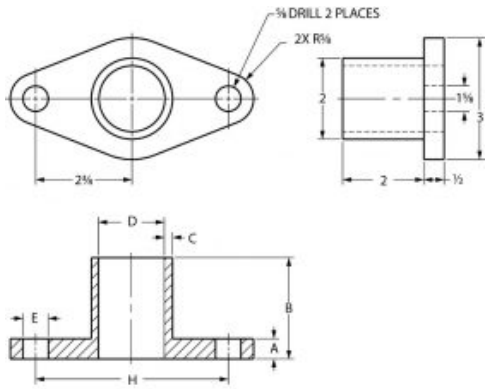

A = _____ D = _____
B = _____ E = _____
C = _____ H = _____

Exercise 5

Study the print below and fill in the related dimensions.

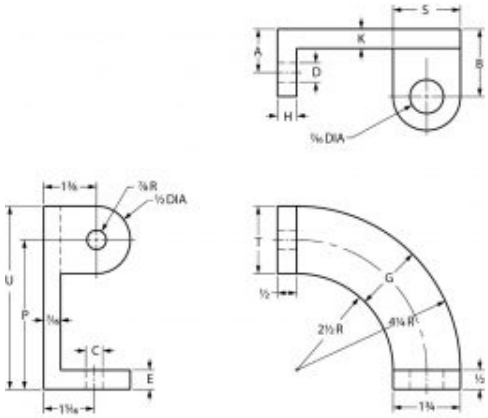

A = _____ H = _____
B = _____ K = _____
C = _____ P = _____
D = _____ S = _____
E = _____ T = _____
G = _____ U = _____

This page titled 7.4: Dimensioning Exercise is shared under a CC BY 4.0 license and was authored, remixed, and/or curated by Ric Costin (OpenOregon) .

- **1.9: Print Interpretation** by Ric Costin is licensed CC BY 4.0. Original source: https://openoregon.pressbooks.pub/blueprint.

Index

Glossary

Sample Word 1 | Sample Definition 1

Detailed Licensing

Overview

Title: Technical Sketching (NWTC)

Webpages: 41

All licenses found:

- CC BY 4.0: 95.1% (39 pages)
- Undeclared: 4.9% (2 pages)

By Page

- Technical Sketching (NWTC) - *CC BY 4.0*
  - Front Matter - *CC BY 4.0*
    - TitlePage - *CC BY 4.0*
    - InfoPage - *CC BY 4.0*
    - Table of Contents - *Undeclared*
    - Licensing - *CC BY 4.0*
  - 1: Introduction to Blueprints and Technical Sketches - *CC BY 4.0*
    - 1.1: Introduction - *CC BY 4.0*
    - 1.2: Types drawings - *CC BY 4.0*
      - 1.2.1: Self Test - *CC BY 4.0*
    - 1.3: Describe the drafting tools and materials used in drawing plans - *CC BY 4.0*
      - 1.3.1: Tools - *CC BY 4.0*
      - 1.3.2: Drafting Materials - *CC BY 4.0*
      - 1.3.3: Self Test 1 - *CC BY 4.0*
  - 2: Introduction to Drawing Layout - *CC BY 4.0*
    - 2.1: Basic layout of a drawing - *CC BY 4.0*
  - 3: Lines Styles and Types - *CC BY 4.0*
    - 3.1: Line styles and types - *CC BY 4.0*
    - 3.2: The Meaning of Lines - *CC BY 4.0*
  - 4: Sketching - *CC BY 4.0*
    - 4.1: Sketching Technique - *CC BY 4.0*
  - 5: Isometric Drawings - *CC BY 4.0*
    - 5.1: Make isometric sketches of simple rectangular objects - *CC BY 4.0*
    - 5.2: Sketching Figures with Non-isometric Lines - *CC BY 4.0*
    - 5.3: Make Isometric Sketches - *CC BY 4.0*
  - 6: Orthographic Projection - *CC BY 4.0*
    - 6.1: Visualization of Orthographics Projections - *CC BY 4.0*
    - 6.2: Auxiliary Views - *CC BY 4.0*
    - 6.3: Sectional Views - *CC BY 4.0*
    - 6.4: Make orthographic sketches - *CC BY 4.0*
    - 6.5: Make an orthographic three-view, fully dimensioned sketch of a simple object - *CC BY 4.0*
  - 7: Dimensioning - *CC BY 4.0*
    - 7.1: Scaling - *CC BY 4.0*
    - 7.2: Principles of Dimensioning - *CC BY 4.0*
    - 7.3: Dimensioning - *CC BY 4.0*
    - 7.4: Dimensioning Exercise - *CC BY 4.0*
  - Back Matter - *CC BY 4.0*
    - Index - *CC BY 4.0*
    - Glossary - *CC BY 4.0*
    - Detailed Licensing - *CC BY 4.0*
    - Detailed Licensing - *Undeclared*

Detailed Licensing

Overview

Title: Technical Sketching (NWTC)

Webpages: 41

All licenses found:

- CC BY 4.0: 95.1% (39 pages)
- Undeclared: 4.9% (2 pages)

By Page

- Technical Sketching (NWTC) - *CC BY 4.0*
  - Front Matter - *CC BY 4.0*
    - TitlePage - *CC BY 4.0*
    - InfoPage - *CC BY 4.0*
    - Table of Contents - *Undeclared*
    - Licensing - *CC BY 4.0*
  - 1: Introduction to Blueprints and Technical Sketches - *CC BY 4.0*
    - 1.1: Introduction - *CC BY 4.0*
    - 1.2: Types drawings - *CC BY 4.0*
      - 1.2.1: Self Test - *CC BY 4.0*
    - 1.3: Describe the drafting tools and materials used in drawing plans - *CC BY 4.0*
      - 1.3.1: Tools - *CC BY 4.0*
      - 1.3.2: Drafting Materials - *CC BY 4.0*
      - 1.3.3: Self Test 1 - *CC BY 4.0*
  - 2: Introduction to Drawing Layout - *CC BY 4.0*
    - 2.1: Basic layout of a drawing - *CC BY 4.0*
  - 3: Lines Styles and Types - *CC BY 4.0*
    - 3.1: Line styles and types - *CC BY 4.0*
    - 3.2: The Meaning of Lines - *CC BY 4.0*
  - 4: Sketching - *CC BY 4.0*
    - 4.1: Sketching Technique - *CC BY 4.0*
  - 5: Isometric Drawings - *CC BY 4.0*
    - 5.1: Make isometric sketches of simple rectangular objects - *CC BY 4.0*
    - 5.2: Sketching Figures with Non-isometric Lines - *CC BY 4.0*
    - 5.3: Make Isometric Sketches - *CC BY 4.0*
  - 6: Orthographic Projection - *CC BY 4.0*
    - 6.1: Visualization of Orthographics Projections - *CC BY 4.0*
    - 6.2: Auxiliary Views - *CC BY 4.0*
    - 6.3: Sectional Views - *CC BY 4.0*
    - 6.4: Make orthographic sketches - *CC BY 4.0*
    - 6.5: Make an orthographic three-view, fully dimensioned sketch of a simple object - *CC BY 4.0*
  - 7: Dimensioning - *CC BY 4.0*
    - 7.1: Scaling - *CC BY 4.0*
    - 7.2: Principles of Dimensioning - *CC BY 4.0*
    - 7.3: Dimensioning - *CC BY 4.0*
    - 7.4: Dimensioning Exercise - *CC BY 4.0*
  - Back Matter - *CC BY 4.0*
    - Index - *CC BY 4.0*
    - Glossary - *CC BY 4.0*
    - Detailed Licensing - *CC BY 4.0*
    - Detailed Licensing - *Undeclared*