FUNDAMENTALS - DRAWINGS AND SPECIFICATIONS

BC Campus

LibreTexts™

Fundamentals - Drawings and Specifications

BC Campus

This text is disseminated via the Open Education Resource (OER) LibreTexts Project (https://LibreTexts.org) and like the thousands of other texts available within this powerful platform, it is freely available for reading, printing, and "consuming."

The LibreTexts mission is to bring together students, faculty, and scholars in a collaborative effort to provide an accessible, and comprehensive platform that empowers our community to develop, curate, adapt, and adopt openly licensed resources and technologies; through these efforts we can reduce the financial burden born from traditional educational resource costs, ensuring education is more accessible for students and communities worldwide.

Most, but not all, pages in the library have licenses that may allow individuals to make changes, save, and print this book. Carefully consult the applicable license(s) before pursuing such effects. Instructors can adopt existing LibreTexts texts or Remix them to quickly build course-specific resources to meet the needs of their students. Unlike traditional textbooks, LibreTexts' web based origins allow powerful integration of advanced features and new technologies to support learning.

LibreTexts is the adaptable, user-friendly non-profit open education resource platform that educators trust for creating, customizing, and sharing accessible, interactive textbooks, adaptive homework, and ancillary materials. We collaborate with individuals and organizations to champion open education initiatives, support institutional publishing programs, drive curriculum development projects, and more.

The LibreTexts libraries are Powered by NICE CXone Expert and was supported by the Department of Education Open Textbook Pilot Project, the California Education Learning Lab, the UC Davis Office of the Provost, the UC Davis Library, the California State University Affordable Learning Solutions Program, and Merlot. This material is based upon work supported by the National Science Foundation under Grant No. 1246120, 1525057, and 1413739.

Any opinions, findings, and conclusions or recommendations expressed in this material are those of the author(s) and do not necessarily reflect the views of the National Science Foundation nor the US Department of Education.

Have questions or comments? For information about adoptions or adaptions contact info@LibreTexts.org or visit our main website at https://LibreTexts.org.

This text was compiled on 04/22/2026

TABLE OF CONTENTS

Licensing

Acknowledgments and Copyright

Foreword

Industry Training Authority of BC

Symbols Legend

1: Describe the drafting tools and materials used in drawing plans

- 1.1: Tools
- 1.2: Drafting Materials
- 1.3: Computer drafting printing
- 1.E: Self Test 1

2: Describe lines, lettering, and dimensioning in drawings

- 2.1: Line styles and types
- 2.2: Standard lettering
- 2.3 Abbreviations
- 2.4: Principles of Dimensioning
- 2.E: Self-Test 2

3: Use scale rulers to determine actual dimensions from drawings

- 3.0: Prelude to Scales
- 3.2: Metric Scales
- 3.3: Obtain dimensions from drawings
- 3.E: Self Test 3
- Untitled Page 19

4: Describe drawing projections

- 4.1: Types of views used in drawings
- 4.E: Self Test 4

5: Interpret mechanical drawings

- 5.1: Basic layout of a drawing
- 5.2: Specifications
- 5.E: Self-Test 5

6: Creating drawings and sketches

- 6.1: Creating Drawings and Sketches
- 6.2: Make isometric sketches of simple rectangular objects
- 6.3: Sketching Figures with Non-isometric Lines

7: Exercises

- 7.1: Practice 1: Make orthographic sketches
- 7.4: Answers
- 7.2: Practical 2: Make an orthographic three-view, fully dimensioned sketch of a simple object
- 7.3: Practice 3: Make Isometric Sketches

Index

Glossary

Detailed Licensing

Licensing

*A detailed breakdown of this resource's licensing can be found in **Back Matter/Detailed Licensing**.*

Acknowledgments and Copyright

Acknowledgments and Copyright

To learn more about BCcampus Open Textbook project, visit http://open.bccampus.ca

© Camosun College. The Trades Access Common Core resources are licensed under the Creative Commons Attribution 4.0 Unported Licence (http://creativecommons.org/licenses/by/4.0/), except where otherwise noted. Under this licence, any user of this textbook or the textbook contents herein must provide proper attribution as follows:

- If you redistribute this textbook in a digital format (including but not limited to EPUB, PDF, and HTML), then you must retain on every page the following attribution: Download for free at http://open.bccampus.ca/find-open-textbooks/
- If you redistribute this textbook in a print format, then you must include on every physical page the following attribution: Download for free at http://open.bccampus.ca/find-open-textbooks/
- If you redistribute part of this textbook, then you must retain in every digital format page view (including but not limited to EPUB, PDF, and HTML) and on every physical printed page the following attribution: Download for free at http://open.bccampus.ca/find-open-textbooks/
- If you use this textbook as a bibliographic reference, then you should cite it as follows: BCcampus, Name of Textbook or OER. DATE. http://open.bccampus.ca/find-open-textbooks/.

For questions regarding this licensing, please contact opentext@bccampus.ca

All images copyright BC Industry Training Authority are licensed under the Creative Commons Attribution-NonCommercial-ShareAlike 4.0 licence.
http://creativecommons.org/licenses/by-nc-sa/4.0/

The issuing/publishing body is Crown Publications, Queen's Printer, Ministry of Technology, Innovation and Citizens' Services.

BCcampus would like to acknowledge the following individuals and organizations for their contributions in producing the Trades Access Common Core Open Textbook resources.

BCcampus

Open Education Team

Hilda Anggraeni, Graphics

Camosun College

Olaf Nielsen, Chair, Trades Development and Special Projects, School of Trades and Technology

Nannette Plant, Manager, Enterprise Point Operations & Special Projects, Office of the VP Strategic Development

Rod Lidstone, Instructor, Plumbing and Pipe Trades, Lead Writer/Reviewer

Brian Coey, Instructor, Sheet Metal and Metal Fabrication, Writer/Reviewer

Matt Zeleny, Camosun Innovates, 3D imaging

Open School BC

Monique Brewer, Director

Adrian Hill, Instructional Designer

Dennis Evans, Image Coordinator, Photographer, Graphics, Production Technician (layout)

Farrah Patterson, Production Technician

Foreword

Foreword

The BC Open Textbook Project began in 2012 with the goal of making post-secondary education in British Columbia more accessible by reducing student cost through the use of openly licensed textbooks. The BC Open Textbook Project is administered by BCcampus and is funded by the British Columbia Ministry of Advanced Education.

Open textbooks are open educational resources (OER); they are instructional resources created and shared in ways so that more people have access to them. This is a different model than traditionally copyrighted materials. OER are defined as teaching, learning, and research resources that reside in the public domain or have been released under an intellectual property licence that permits their free use and repurposing by others (Hewlett Foundation). Our open textbooks are openly licensed using a Creative Commons licence, and are offered in various e-book formats free of charge, or as printed books that are available at cost. For more information about this project, please contact opentext@bccampus.ca. If you are an instructor who is using this book for a course, please let us know.

Preface

The concept of identifying and creating resources for skills that are common to many trades has a long history in the Province of British Columbia. This collection of Trades Access Common Core (TACC) resources was adapted from the 15 Trades Common Core line modules co-published by the Industry Training and Apprenticeship Commission (ITAC) and the Centre for Curriculum Transfer and Technology (C2T2) in 2000-2002. Those modules were revisions of the original Common Core portion of the TRAC modules prepared by the Province of British Columbia Ministry of Post-Secondary Education in 1986. The TACC resources are still in use by a number of trades programs today and, with the permission from the Industry Training Authority (ITA), have been utilized in this project.

These open resources have been updated and realigned to match many of the line and competency titles found in the Province of BC's trades apprenticeship program outlines. A review was carried out to analyze the provincial program outlines of a number of trades, with the intent of finding common entry-level learning tasks that could be assembled into this package. This analysis provided the template for the outline used to update the existing modules. Many images found in ITA apprentice training modules were also incorporated into these resources to create books that are similar to what students will see when they continue their chosen trades training. The project team has also taken many new photographs for this project, which are available for use in other trades training resources.

The following list of lines and competencies was generated with the goal of creating an entry-level trades training resource, while still offering the flexibility for lines to be used as stand-alone books. This flexibility—in addition to the textbook content being openly licensed—allows these resources to be used within other contexts as well. For example, instructors or institutions may incorporate these resources into foundation-level trades training programming or within an online learning management system (LMS).

Line A – Safe Work Practices

- A-1 Control Workplace Hazards
- A-2 Describe WorkSafeBC Regulations
- A-3 Handle Hazardous Materials Safely
- A-4 Describe Personal Safety Practices
- A-5 Describe Fire Safety

Line B – Employability Skills

- B-1 Apply Study and Learning Skills
- B-2 Describe Expectations and Responsibilities of Employers and Employees
- B-3 Use Interpersonal Communication Skills
- B-4 Describe the Apprenticeship System

Line C – Tools and Equipment

- C-1 Describe Common Hand Tools and Their Uses

- C-2 Describe Common Power Tools and Their Uses
- C-3 Describe Rigging and Hoisting Equipment
- C-4 Describe Ladders and Platforms

Line D – Organizational Skills

- D-1 Solve Trades Mathematical Problems
- D-2 Apply Science Concepts to Trades Applications
- D-3 Read Drawings and Specifications
- D-4 Use Codes, Regulations, and Standards
- D-5 Use Manufacturer and Supplier Documentation
- D-6 Plan Projects

Line E – Electrical Fundamentals

- E-1 Describe the Basic Principles of Electricity
- E-2 Identify Common Circuit Components and Their Symbols
- E-3 Explain Wiring Connections
- E-4 Use Multimeters

All of these textbooks are available in a variety of formats in addition to print:

- PDF—printable document with TOC and hyperlinks intact
- HTML—basic export of an HTML file and its assets, suitable for use in learning management systems
- Reflowable EPUB—format that is suitable for all screen sizes including phones

All of the self-test questions are also available from BCcampus as separate data, if instructors would like to use the questions for online quizzes or competency testing.

About This Book

In an effort to make this book a flexible resource for trainers and learners, the following features are included:

- An introduction outlining the high-level goal of the Competency, and a list of objectives reflecting the skills and knowledge a person would need to achieve to fulfill this goal.
- Discrete Learning Tasks designed to help a person achieve these objectives
- Self-tests at the end of each Learning Task, designed to informally test for understanding.
- A reminder at the end of each Competency to complete a Competency test. Individual trainers are expected to determine the requirements for this test, as required.
- Throughout the textbook, there may also be links and/or references to other resources that learners will need to access, some of which are only available online.
- Notes, cautions, and warnings are identified by special symbols. A list of those symbols is provided below.

Industry Training Authority of BC

Industry Training Authority of BC

The ITA works with employers, employees, industry, labour, training providers, and government to issue credentials, manage apprenticeships, set program standards, and increase opportunities in approximately 100 BC trades. Among its many functions are oversight of the development of training resources that align with program standards, outlines, and learning objectives, and authorizing permission to utilize these resources (text and images).

Erin Johnston, Director of Training Delivery

Cory Williams, Manager, Industry Relations

Publishing Services, Queen's Printer

Spencer Tickner, Director of QP Publishing Services

Dwayne Gordon, Manager, Electronic Publishing

October 2015, Version 1

To order print copies of any of the Trades Access Common Core resources, please contact us:

Crown Publications, Queen's Printer

PO Box 9452 Stn Prov Govt

563 Superior St, 3rd Floor

Victoria, BC V8W 9V7

Phone: 250-387-6409

Toll Free: 1-800-663-6105

Fax: 250-387-1120

crownpub@gov.bc.ca

www.crownpub.bc.ca

Intellectual Property Program

Ilona Ugro, Copyright Officer, Ministry of Technology, Innovation and Citizens' Services,
Province of British Columbia

Creative Commons Attributions

Cover photo:

(https://commons.wikimedia.org/wiki/File:DKR_Atelier.jpg) by DKR under CC BY SA 3.0
(https://creativecommons.org/licenses/by-sa/3.0/deed.en)

Symbols Legend

Symbols Legend

Important:
This icon highlights important information.

Poisonous:
This icon is a reminder for a potentially toxic/poisonous situation.

Resources:
The resource icon highlights any required or optional resources.

Flammable:
This icon is a reminder for a potentially flammable situation.

Self-test:
This icon reminds you to complete a self-test.

Explosive:
This icon is a reminder for a possibly explosive situation.

Safety gear:
The safety gear icon is an important reminder to use protective equipment.

Electric shock:
This icon is a reminder for potential electric shock.

Safety Advisory

Be advised that references to the Workers' Compensation Board of British Columbia safety regulations contained within these materials do not/may not reflect the most recent Occupational Health and Safety Regulation. The current Standards and Regulation in BC can be obtained at the following website: http://www.worksafebc.com.

Please note that it is always the responsibility of any person using these materials to inform him/herself about the Occupational Health and Safety Regulation pertaining to his/her area of work.

BCcampus

January 2015

Disclaimer

The materials in the Trades Access Common Core Open Textbook project are for use by students and instructional staff and have been compiled from sources believed to be reliable and to represent best current opinions on these subjects. These manuals are intended to serve as a starting point for good practices and may not specify all minimum legal standards. No warranty, guarantee or representation is made by BCcampus as to the accuracy or sufficiency of the information contained in these publications. These manuals are intended to provide basic guidelines for trade practices. Do not assume, therefore, that all necessary warnings and safety precautionary measures are contained in this module and that other or additional measures may not be required.

CHAPTER OVERVIEW

1: Describe the drafting tools and materials used in drawing plans

Traditionally, drafters sat at drafting boards and used pencils, pens, compasses, protractors, triangles, and other drafting devices to prepare a drawing manually. Today, however, most professional drafters use computer-aided drafting (CAD) systems to prepare drawings. Although drafters use CAD extensively, it is only a tool. Drafters and tradespersons still need knowledge of traditional drafting tools and techniques.

1.1: Tools

1.2: Drafting Materials

1.3: Computer drafting printing

1.E: Self Test 1

1: Describe the drafting tools and materials used in drawing plans is shared under a CC BY license and was authored, remixed, and/or curated by LibreTexts.

1.1: Tools

Drafting tools are needed to lay out the different shapes and lines used to create drawings and sketches. Basic knowledge of the available tools and how to use them will assist you in your drawing.

Drafting board or table

The drafting board is an essential tool. Paper will be attached and kept straight and still, so the surface of the drafting board must be smooth and true, with no warps or twists. The surfaces of most drafting boards are covered with vinyl because it is smooth and even.

The drafting board or table should have two parallel outside working edges made of either hardwood or steel.

Most drafting table tops can be set at different heights from the floor and at any angle from vertical to horizontal. Other drafting tables may not have the same adjustments and may be limited to being raised only from horizontal to a low slope.

To reduce back strain, use an adjustable drafting stool when working at a drafting table. Tables or boards should be a minimum of 1.2 m (4') in width and 0.9 m (3') in height.

T-square

The fixed head T-square is used for most work. It should be made of durable materials and have a transparent edge on the blade. To do accurate work, the blade must be perfectly square and straight, which should be checked regularly.

The T-square is used to draw horizontal lines and align other drawing instruments. If you are right-handed, you hold it tight against the left edge of the drawing board and move it up and down as required. When you make close adjustments, your fingers should be on top of the square, and you should use your thumb to control the T-square's movement, Figure 1.1.1.

Figure 1.1.1: A person using a T-square

When drawing horizontal lines, incline your pencil in the direction you are drawing the line. Hold the pencil point as close as possible to the blade. Roll the pencil between your fingers to prevent the point from becoming flat on one side.

Triangle

A triangle (set-square) is made of clear plastic. Some triangles have rabbeted edges (Figure 1.1.2) so that when you draw lines, the corner of the edge is set away from the paper to help prevent smudges and ink blotches.

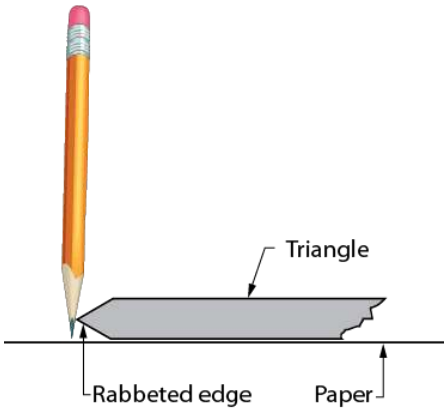

Figure **1.1.2**: Hold a pencil vertical against the rabbeted edge

Triangles are available in 45°-90°-45° or 30°-60°-90° combinations. For most work, triangles should be about 200 mm to 250 mm (8” to 10”) long. Triangles should be stored flat to prevent warping and not stored underneath other objects to prevent any pressure from causing them to deform.

Check a triangle for accuracy by drawing a perpendicular line, then reversing the triangle and drawing another perpendicular line (Figure 3).

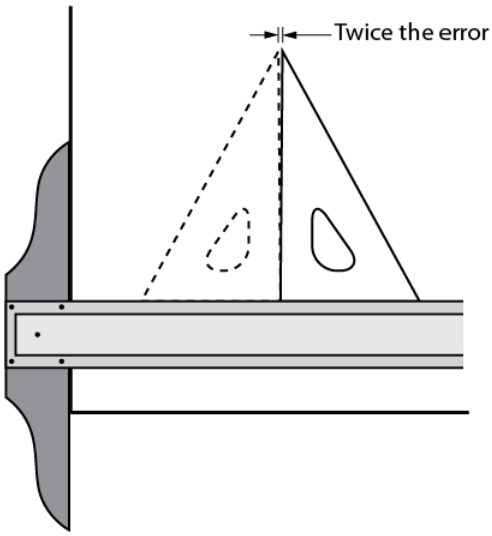

Figure **1.1.3**: Testing a triangle

Triangles are used to draw vertical lines and other lines at set angles. Rest the triangle on the T-square blade and slide it along the blade to the desired location. Draw the full length of the vertical line in one pass if possible. Hold the blades of the T-square and the triangle together to prevent movement when you are drawing, and hold the pencil point as close as possible to
the triangle. You can also draw 15° and 75° angles by using both a 45°-90°-45° and a 30°-60°-90° in combination. Figure **1.1.4** shows how triangles are placed to draw angles that are every multiple of 15°.

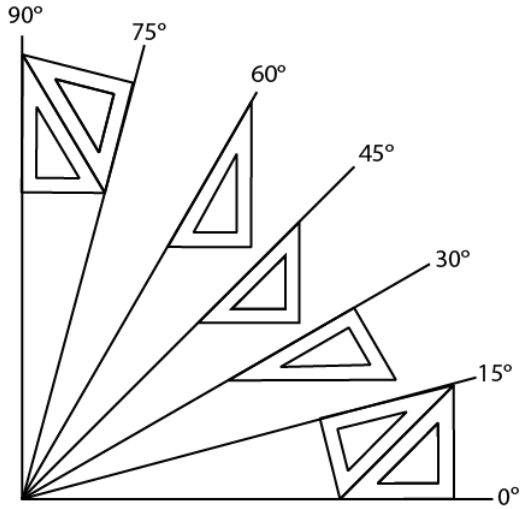

Figure 1.1.4: How to create the most common angles with triangles

Protractor

A protractor, Figure 1.1.5, is an instrument used to measure angles. It is typically made of transparent plastic or glass. Protractors can be used for checking and transferring angles to and from a drawing sheet.

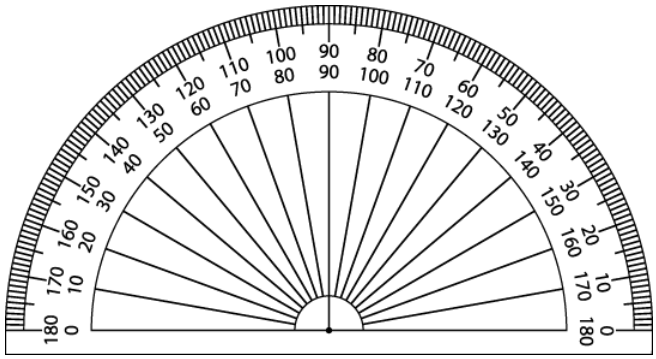

Figure 1.1.5: Protractor

Drafting machine

A drafting machine (Figure 1.1.6) is a device that is mounted to the drawing board. The drafting machine replaces the T-square and triangles, as it has rulers with angles that can be precisely adjusted with a controlling mechanism. A drafting machine allows easy drawing of parallel lines over the paper. The adjustable angle between the rulers allows the lines to be drawn at various accurate angles. The rulers are replaceable and can be replaced with scale rulers. Rulers may also be used as a support for separate special rulers and letter templates.

Figure 1.1.6: Drafting machine

Drawing pencils

Both wood and mechanical pencils are used for drafting (Figure 1.1.7). Manufacturers grade drawing pencils using numbers and letters. These range from 6B (very soft and black) to 9H (the hardest). From 6B, the pencils progress through 5B, 4B, 3B, 2B, B, and HB, and then to F, the medium grade. After that, they move to the harder graphite: H, 2H, 3H, 4H, 5H, 6H, 7H, 8H, and finally 9H. The softer grades are used for sketching and rendering drawings. The harder grades are used for instrument drawings. Mechanical pencils do not require sharpening and are made to hold leads (they are actually made of graphite) that are bought separately. Thin-lead mechanical pencils, with leads as small as 0.5 mm, are available in different grades of lead. Most draftspersons use four or five different mechanical pencils with a different lead in each. The pencils come in different colors, so it is easy to track which lead is in each.

Figure 1.1.7: Wood and mechanical pencils

Erasers and erasing shields

The best eraser to use on drawings is either a soft pink eraser with beveled ends or a white plastic eraser. Electric rotary erasers are also available. They permit easy erasure of small errors without erasing adjacent lines. A metal erasing shield helps to confine erasures to the desired area. Erasing shields are made from very thin stainless steel and have holes of various shapes to accommodate the sections to be erased. Figure 1.1.8 shows two erasers and an erasing shield.

Figure 1.1.8: Erasers and erasing shields

Templates

Templates (Figure 1.1.9) are available for many different trades. Templates incorporate cut-outs of symbols and fixtures commonly used in that trade. These cut-outs make it easy to trace shapes onto drawing paper.

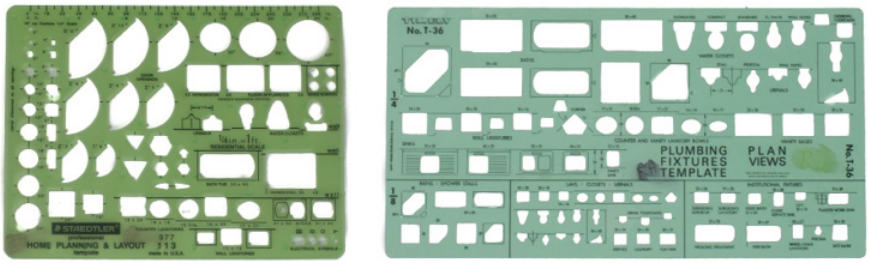

Figure 1.1.9: Templates

French curves and splines

A French curve (1.1.10) is a plastic template designed to help you draw curves. The French curve contains many different curves, but each is represented over a very short distance only. One radius of the curve blends into another radius. It takes a lot of practice to use French curves effectively.

Figure 1.1.10: French Curve

A spline or flexible curve (Figure 11) can be used instead of a French curve to draw most curves. A spline is a plastic or rubber rod that is reinforced with metal. To use a spline, bend it to the shape of the curve you need. The design of the spline lets you hold a pencil against an edge and draw an accurate line without smudging. A spline cannot be used to draw curves with a very short radius because the spline will not bend tightly.

Figure 1.1.11: Spline

Compass

A compass can be used for drawing circles, bisecting lines, or dividing angles. For very large circles, you can use a beam compass. The four types of compasses are shown in Figure 1.1.12 — Figure 1.1.14. Most compasses can be fitted with leads, pens, or points.

Figure 1.1.12: Friction Compass

Figure **1.1.1**: Copy and Paste Caption here. (Copyright; author via source)

Figure **1.1.13**: Wing Compass

Figure 1.1.14: Beam Compass

When using the compass, tilt it in the direction of the line, as shown in Figure 13

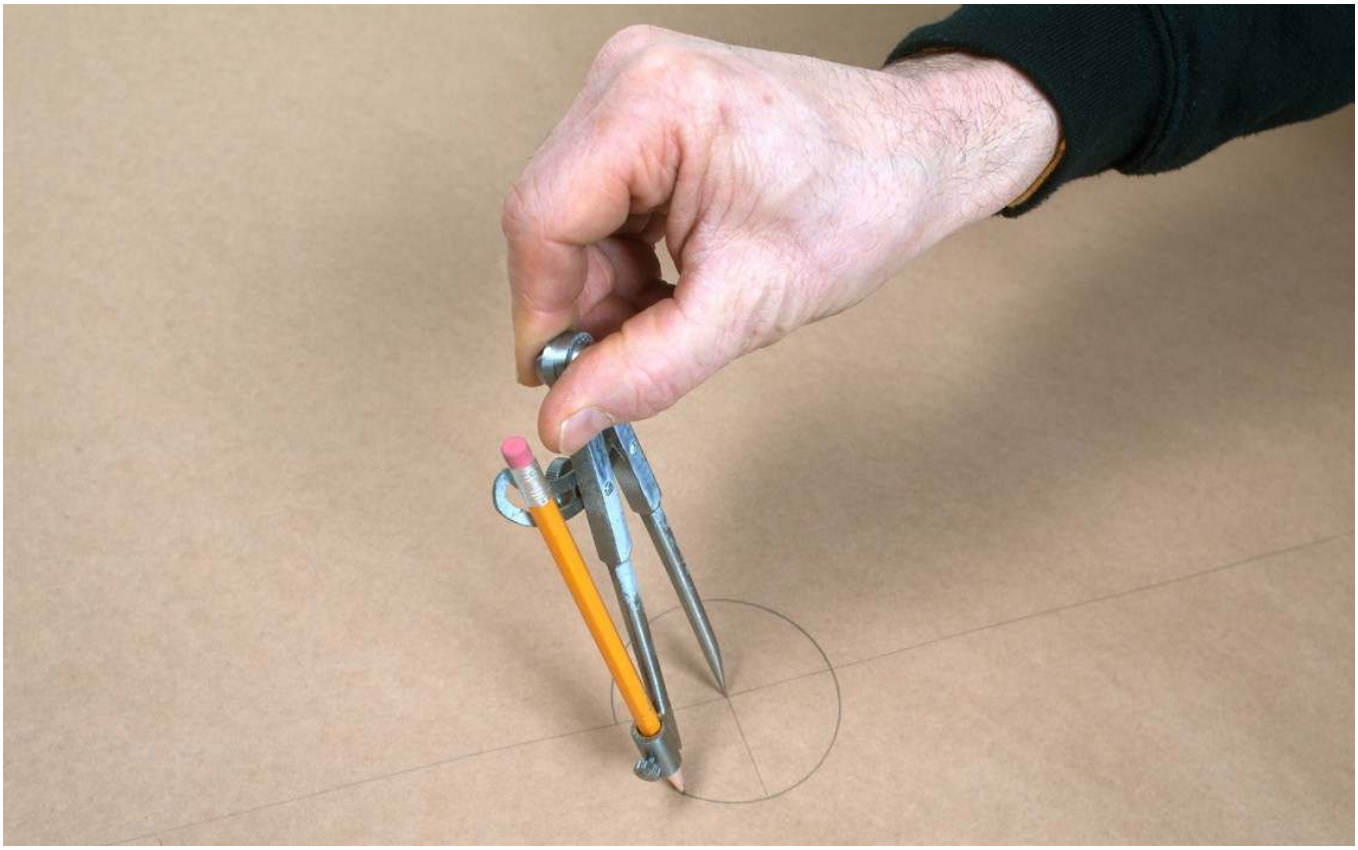

Figure 1.1.15: Drawing a circle with a compass

Dividers

Dividers (Figure 1.1.16) are used for transferring dimensions from a drawing to a measuring device such as a ruler or scale. They are also used when scribing directly on material like metal.

Figure 1.1.16: Dividers

Dusting cloth or brush

It is essential to keep your drawings and drafting surface clean. When equipment gets dirty from the lead pencils, you should clean it regularly so that it does not smudge your drawings. Any soft, clean cloth is suitable. You may want to wash your board occasionally with a spray cleaner.

Use a brush like the one in Figure 1.1.17 to clean your table before placing paper down and sweep away any debris as you draw. If you use your hand to brush, you could leave marks on the paper. After sharpening a pencil, wipe off any dust clinging to the pencil's point to prevent smudging.

Figure 1.1.17: Dusting Brush

Scale rulers

Scale rulers let you draw diagrams at a reduced scale. They also let you obtain dimensions from a scaled drawing. Scale rulers come in various types to meet the requirements of many kinds of work. Most scale rulers have three edges and six different scales. The scales are read from either end of the rule. A typical combination of metric scales is 1:20, 1:50, 1:100, 1:25, 1:75, and 1:125.

Because of the decimal basis of metric measurements, metric scale rulers are both applicable and easy to use at any scale. Figure 1.1.18 shows the two scales from both ends of the same side.

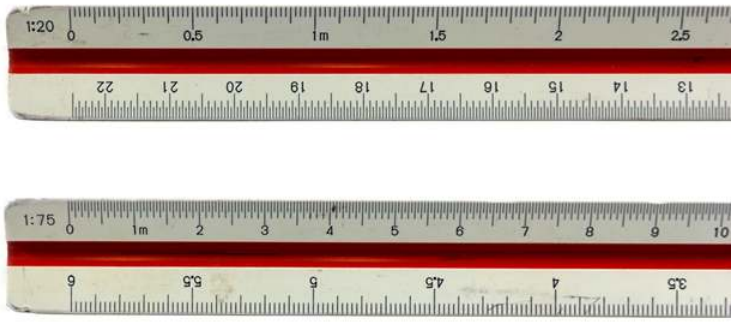

Figure 1.1.18: Metric scale ruler

Imperial scale rulers may be an architect's ruler, a mechanical engineer's ruler, or a civil engineer's ruler (Figure 17). The architect's scale ruler is the most common and is in inches and fractions of inches. A mechanical engineer's scale ruler comes in inches and decimals of inches. A civil engineer's scale ruler comes in feet and decimals of feet.

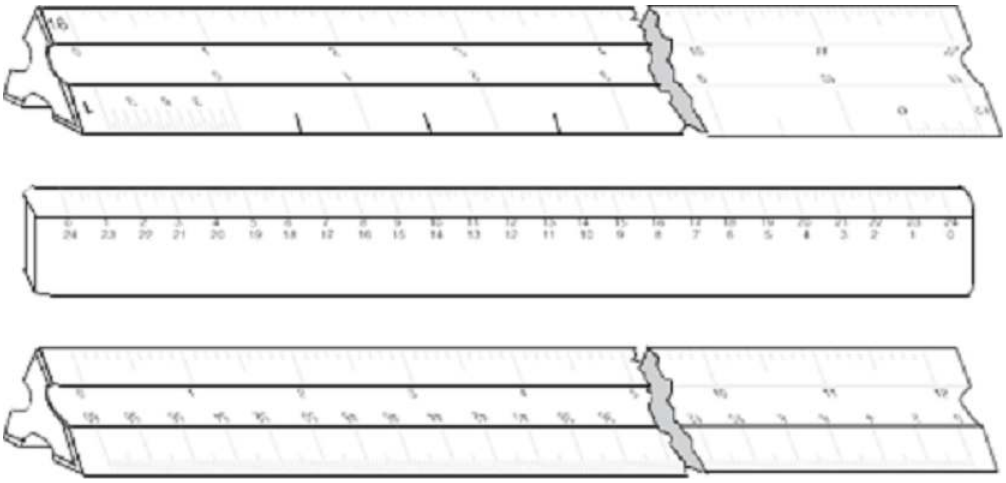

Figure 1.1.19: Imperial Scale Rulers

1.1: Tools is shared under a CC BY license and was authored, remixed, and/or curated by LibreTexts.

1.2: Drafting Materials

The most common support for drawing is paper. Even though the original creative surface has changed from the drafting table to the computer screen, on the work site drawings are still primarily in printed form.

Drawing paper

There is a wide variety of drawing paper available in many sizes and of different qualities.
Good quality drawing paper is acid-free and will not turn yellow with age. Light-colored drawing papers are available in pale yellow or buff, but these should be used only when it is not necessary to make copies.

Tracing paper

Tracing paper, which is transparent, can be used to make copies of drawings. It is thin enough to allow the light of photocopy machines to shine through the unmarked areas, and only the lines and figures will block the light. Materials used for tracing include tracing paper, vellum, tracing cloth, glass cloth, and polyester film with a matte finish.

Standard paper sizes

Paper sizes typically comply with one of two different standards: ISO (world standard) or ANSI/ ASME Y14 (American).
The standard ISO series of paper sizes are as follows:

- A0 841 mm × 1189 mm
- A1 594 mm × 841 mm
- A2 420 mm × 594 mm
- A3 297 mm × 420 mm
- A4 210 mm × 297 mm
- A5 148 mm × 210 mm

The standard ANSI/ASME series of paper sizes is as follows:

- E 34 inch × 44 inch
- D 22 inch × 34 inch
- C 17 inch × 22 inch
- B 11 inch × 17 inch
- A 8.5 inch × 11 inch

The 81/2" × 11" standard letter paper corresponds to 216 mm × 279 mm. You can buy precut sheets that have a border and a preprinted title block in the lower right-hand corner. These are available in many standard sizes.

If the paper you use does not have a border and title block, you will have to draw them in. The left-hand border should be wider than the right-hand border and should be at least 50 mm wide to allow room for the prints to be bound. Figure 1.2.1 shows a title block with suitable dimensions added.

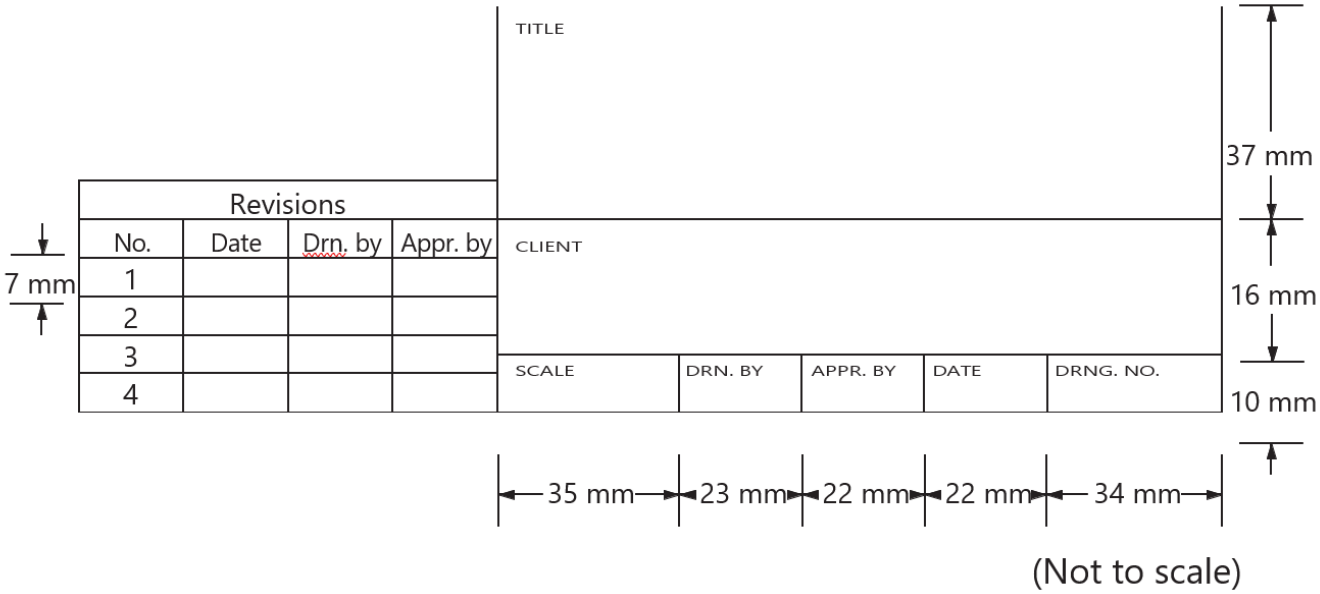

Figure 1.2.1: Sample Title Block

Paper rolls

Many grades of paper rolls are available in different widths that can be cut to any length required.

Drafting or masking tape

Use drafting or masking tape to hold the paper on the drafting surface. The tape should be attached at the corners to hold the sheet firmly stretched with no wrinkles. Only short pieces of tape are required.

1.2: Drafting Materials is shared under a CC BY license and was authored, remixed, and/or curated by LibreTexts.

1.3: Computer drafting printing

Computer drafting programs are used effectively for all manner of drafting and have virtually replaced manual drafting. Small size computer-generated drawings can be printed on normal computer printers. However, larger drawings require a plotter. Older plotters used pencils, pens, or felt pens, but the new plotters are laser-based or jet printers and are capable of multiple colors. They are made to print all the sizes of drawings. Plotters also print well on vellum and some other non-paper media.

Now complete the Learning Task Self-Test.

1.3: Computer drafting printing is shared under a CC BY license and was authored, remixed, and/or curated by LibreTexts.

1.E: Self Test 1

Self-Test 1

1. What are most drafting tables covered with?
    1. Vinyl
    2. Wood
    3. Metal
    4. Plastic wrap
2. Drafting tables are adjustable in height and angle to the floor.
    1. True
    2. False
3. What are T-squares used for?
    1. Drawing angled lines
    2. Drawing vertical lines
    3. Setting paper on a table
    4. Drawing horizontal lines
4. Why might a set square have rabbeted edges?
    1. To help you prevent smudges
    2. To help keep your pencil sharp
    3. To help keep your pencil aligned
    4. To allow you to draw straight lines
5. Checking a triangle should be done periodically.
    1. True
    2. False
6. What is a set square used for?
    1. Drawing circles
    2. Drawing curved lines
    3. Drawing vertical and angled lines
    4. Drawing horizontal and angled lines
7. When using a 45°-90°-45° and a 30°-60°-90° triangle, angles can be drawn every 10°.
    1. True
    2. False
8. What is a protractor used for?
    1. Measuring lines
    2. Measuring angles
    3. Drawing angled lines
    4. Drawing straight lines
9. What kind of line is drawn to check a triangle?
    1. Straight
    2. Parallel
    3. Oblique
    4. Perpendicular
10. What is a compass used for?
    1. Drawing angled lines
    2. Drawing straight lines
    3. Drawing arcs and circles

4. Drawing irregular curves

11. What is an erasing shield used for?
    1. To erase mistakes
    2. To hold the eraser
    3. To erase in a desired area
    4. To prevent the need for erasing
12. A spline is a plastic or rubber rod reinforced with metal used for drawing curves.
    1. True
    2. False
13. What is the tool called a divider used for?
    1. Drawing circles
    2. Drawing a diameter
    3. Scribing arcs on metal
    4. Drawing arcs and curves
14. What is the purpose of a scale ruler?
    1. To draw straight lines
    2. To enlarge the scale of a drawing
    3. To create drawings at a reduced scale
    4. To convert between imperial and metric measures

1.E: Self Test 1 is shared under a CC BY license and was authored, remixed, and/or curated by LibreTexts.

CHAPTER OVERVIEW

2: Describe lines, lettering, and dimensioning in drawings

The purpose of engineering drawings is to convey objective facts, whereas artistic drawings convey emotion or artistic sensitivity in some way.

Engineering drawings and sketches need to display simplicity and uniformity, and they must be executed with speed. Engineering drawing has evolved into a language that uses an extensive set of conventions to convey information very precisely, with very little ambiguity.

Standardization is also very important, as it aids internationalization; that is, people from different countries who speak different languages can read the same engineering drawing and interpret it the same way. To that end, drawings should be as free of notes and abbreviations as possible so that the meaning is conveyed graphically.

2.1: Line styles and types

2.2: Standard lettering

2.3 Abbreviations

2.4: Principles of Dimensioning

2.E: Self-Test 2

2: Describe lines, lettering, and dimensioning in drawings is shared under a CC BY license and was authored, remixed, and/or curated by LibreTexts.

2.1: Line styles and types

Standard lines have been developed so that every drawing or sketch conveys the same meaning to everyone. In order to convey that meaning, the lines used in technical drawings have both a definite pattern and a definite thickness. Some lines are complete, and others are broken. Some lines are thick, and others are thin. A visible line, for example, is used to show the edges (or "outline") of an object and to make it stand out for easy reading. This line is made thick and dark. On the other hand, a center line, which locates the precise center of a hole or shaft, is drawn thin and made with long and short dashes. This makes it easily distinguishable from the visible line.

When you draw, use a fairly sharp pencil of the correct grade and try to maintain an even, consistent pressure to make it easier for you to produce acceptable lines (Figure 2.1.1). Study the line thicknesses (or "line weights") shown in Figure 2.1.2 and practice making them.

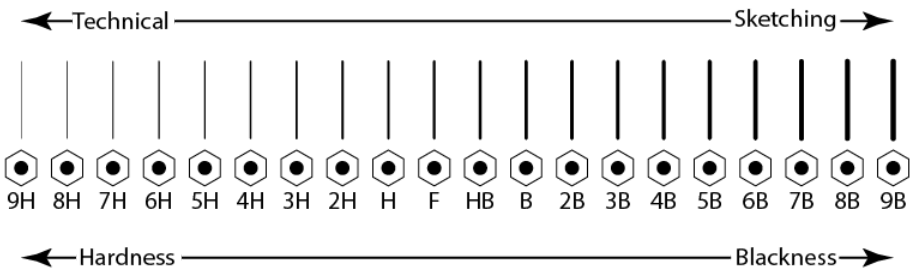

Figure 2.1.1: Lead grade and usage

In computer drafting, the line shape remains the same, but line thickness may not vary as it does in manually created drawings. Some lines, such as center lines, may not cross in the same manner as in a manual drawing. For most computer drafting, line

thickness is not important.

Type	Weight	Line	Description
Object line Margin line	Heavy		Solid line to show visible shapes, edges, and outlines.
Hidden body line	Medium		Broken lines of long and short dashes to show hidden object lines not visible to the eye.
Phantom line	Light		Broken line of short dashes to show alternate positions or movement of a part.
Section line	Light	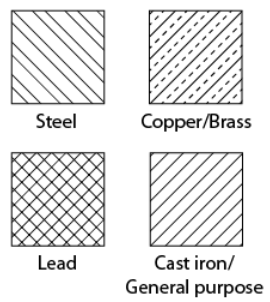	Unbroken lines arranged in a pattern, usually straight and at a 45° diagonal.
Projection line	Light		Unbroken lines that extend away from the object or feature for emphasis.
center line	Light		Broken lines of long and short dashes to show the center of an object.
Extension line/ Dimension line	Light		Extension lines are small lines that extend outward from an object or feature. Dimension lines span between the extension lines with arrowheads and a given dimension.
Leader line	Light	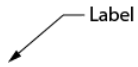	Unbroken line usually drawn at an angle, often with a “dogleg” and an arrowhead. A dot is used in place of an arrowhead where a surface is referenced. Usually accompanied by a label.
Cutting plane line	Heavy		Broken line of one long and two short dashes to show an imaginary cross-section. The arrowheads show the direction from where the cross-section is viewed. A corresponding image will show the view of A.

Break lines for wood and metal	Heavy		Unbroken freehand or straight zig-zag lines to abbreviate longer spans of wood or metal.
Break lines for piping	Heavy		Curled lines to abbreviate a longer span of pipe.

Figure 2.1.2: Weight of lines

To properly read and interpret drawings, you must know the meaning of each line and understand how each is used to construct a drawing. The ten most common are often referred to as the “alphabet of lines.” Let’s look at an explanation and example of each type.

Object lines

Object lines (Figure 2.1.3) are the most common lines used in drawings. These thick, solid lines show the visible edges, corners, and surfaces of a part. Object lines stand out on the drawing and clearly define the outline and features of the object.

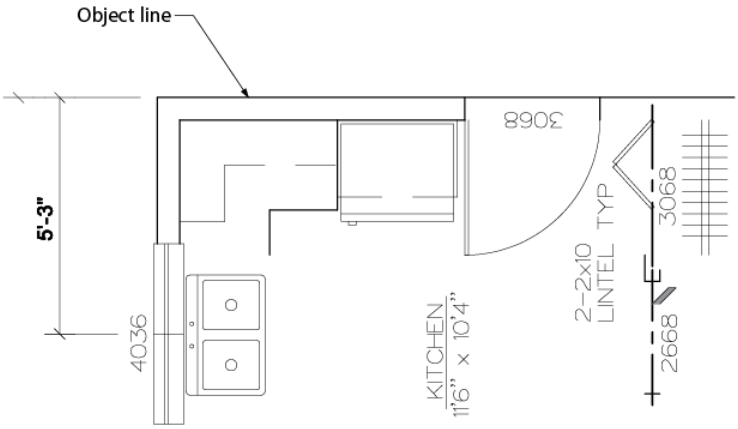

Figure 2.1.3: Object lines

Hidden lines

Hidden lines (Figure 2.1.4) are used to show edges and surfaces that are not visible in a view. These lines are drawn as thin, evenly-spaced dashes. A surface or edge that is shown in one view with an object line will be shown in another view with a hidden line.

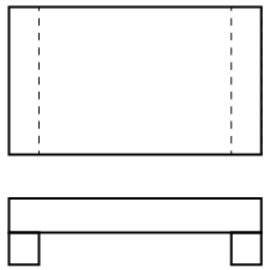

Figure 2.1.4: Hidden lines

Center lines

Center lines (Figure 2.1.5) are used in drawings for several different applications. The meaning of a center line is normally determined by how it is used. center lines are thin, alternating long and short dashes that are generally used to show hole centers and center positions of rounded features, such as arcs and radii. Arcs are sections of a circle, and radii are rounded corners or edges of a part. center lines can also show the symmetry of an object.

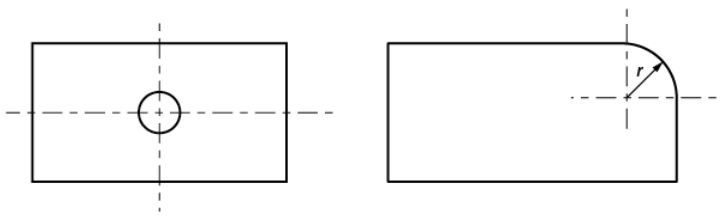

Figure 2.1.5: Center lines

Dimension and extension lines

Dimension and extension lines (Figure 2.1.6) are thin, solid lines that show the direction, length, and limits of the dimensions of a part. Dimension lines are drawn with an arrowhead at both ends.

Extension lines are drawn close to, but never touching, the edges or surface they limit. They should be perpendicular, or at right angles, to the dimension line. The length of extension lines is generally suited to the number of dimensions they limit.

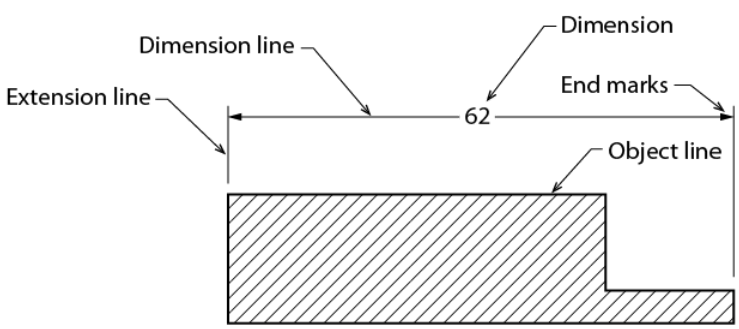

Figure 2.1.6: Dimension and extension lines

Leader lines

Leader lines (Figure 2.1.7) show information such as dimensional notes, material specifications, and process notes. These lines are normally drawn as thin, solid lines with an arrowhead at one end. They are bent or angled at the start but should always end

horizontally at the notation. When leader lines reference a surface, a dot is used instead of an arrowhead.

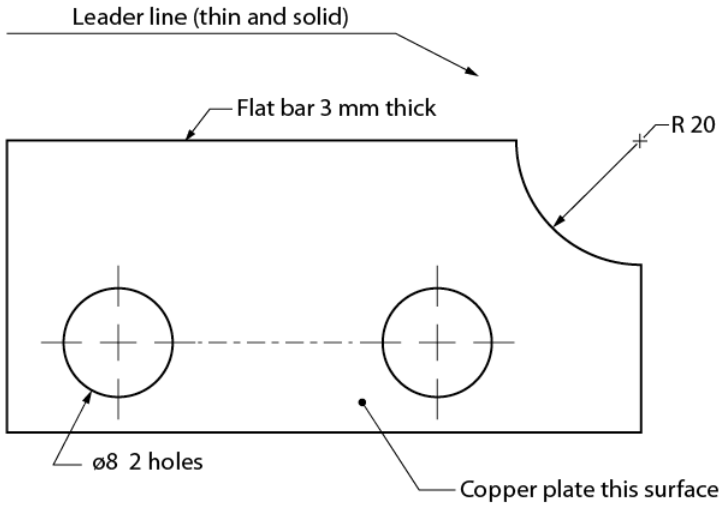

Figure 2.1.7: Leader lines

Note that the symbol ø is used to indicate a diameter rather than the abbreviation "DIA." The number that immediately follows this symbol is the diameter of the hole, followed by the number of holes that must be drilled to that dimension.

Phantom lines

Like center lines, phantom lines (Figure 2.1.8) are used for several purposes in blueprints. Phantom lines are used to show alternate positions for moving parts and the positions of related or adjacent parts and to eliminate repeated details. Phantom lines are drawn as thin, alternating long dashes separated by two short dashes.

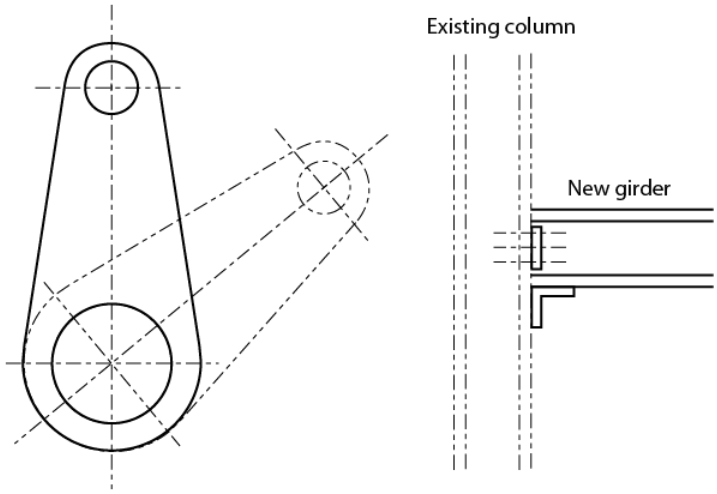

Figure 2.1.8: Phantom lines

Cutting plane lines

Cutting plane lines (Figure 2.1.9) show the location and path of imaginary cuts made through parts to show internal details. In most cases, sectional views (or views that show complicated internal details of a part) are indicated by using a cutting plane line. These lines are thick, alternating long lines separated by two short dashes. The arrowheads at each end show the viewing direction of the related sectional view. The two main types of cutting plane lines are straight and offset.

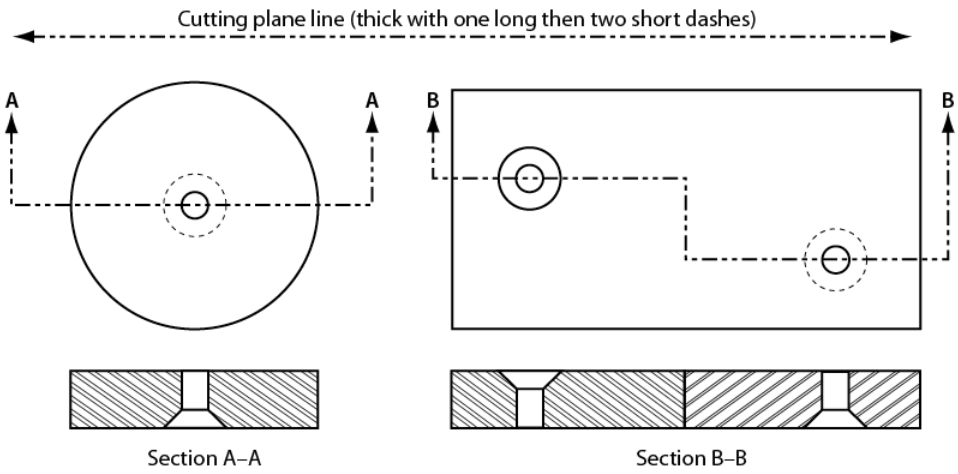

Figure 2.1.9: Cutting plane lines

Section lines

Section lines, also known as sectional lining, (Figure 2.1.10)indicate the surfaces in a sectional view as they would appear if the part were actually cut along the cutting plane line. These are solid lines that are normally drawn at 45-degree angles. Different symbols are used to represent different types of materials.

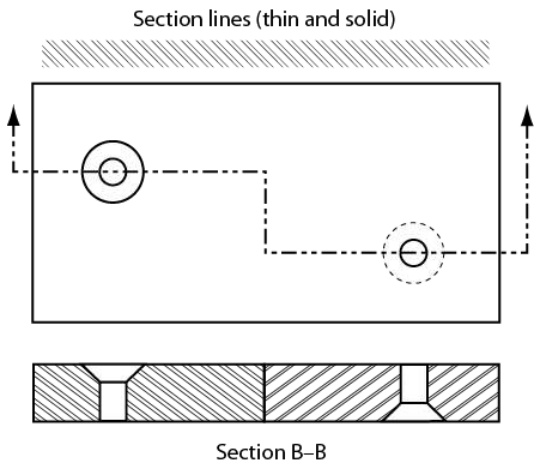

Figure 2.1.10: Section lines combined with cutting plane lines

Break lines

Break lines are drawn to show that a part has been shortened to reduce its size on the drawing. The two variations of break lines common to blueprints are the long break line and the short break line (Figure 2.1.11). Long break lines are thin solid lines that have zigzags to indicate a break. Short break lines are thick, wavy solid lines that are drawn freehand. When either of these break lines is used to shorten an object, you can assume that the section removed from the part is identical to the portions shown on either side of the break.

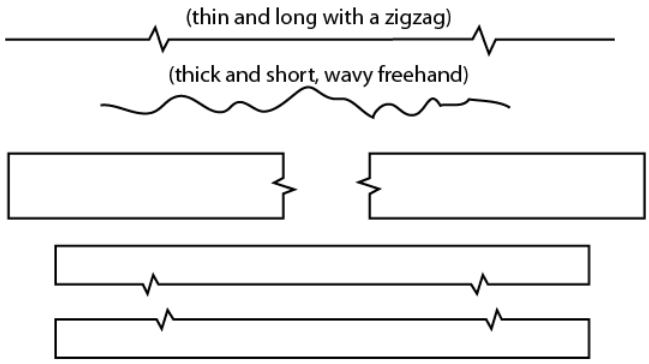

Figure 2.1.11: Break lines

2.1: Line styles and types is shared under a CC BY license and was authored, remixed, and/or curated by LibreTexts.

2.2: Standard lettering

The letters and numbers on a drawing or sketch are as important as the lines. Scribbled, smudged, or badly written letters and numbers can become impossible to read. This may lead to time-consuming and costly errors. Lettering is necessary to describe:

- the name or title of a drawing
- when it was made
- the scale
- who sketched it
- the dimensions
- the special notations that describe the size
- the materials to be used
- the construction methods

The American Standard Vertical letters, Figure 2.2.1, have become the most accepted style of lettering used in the production of manual drafting. This lettering is a Gothic sans serif script, formed by a series of short strokes.

Font styles and sizes may vary in computer drafting. Note that all letters are written as capital (upper case) letters. Practice these characters, concentrating on forming the correct shape. Remember that letters and numbers must be black so that they will stand out and be easy to read. Lettering and figures should have the same weight and darkness as hidden lines.

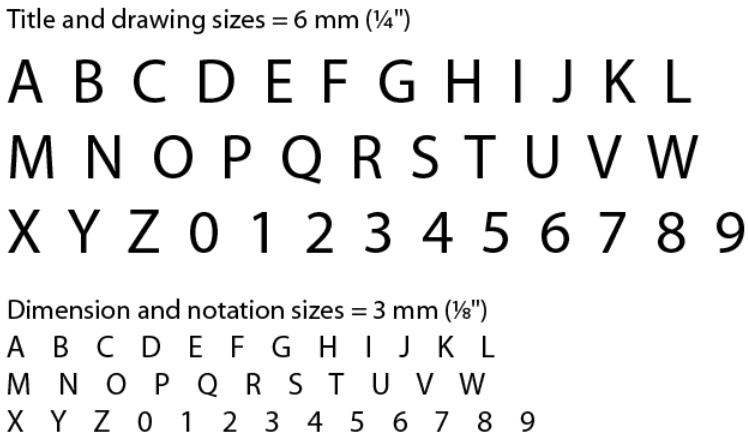

Figure 2.2.1: Standard lettering

Figure 2.2.2 shows a simple drawing. Notice that the dimensions are given between arrows that point to extension lines. By using this method, the dimensions do not get in the way of the drawing. One extension line can be used for several dimensions. Notice also that the titles require larger letter sizes than those used for dimensions and notations. It is important that the title and sketch number stand out, as shown in Figure 2.2.2. When you begin lettering, you may wish to use very light lettering guidelines to ensure uniformity in lettering size and alignment.

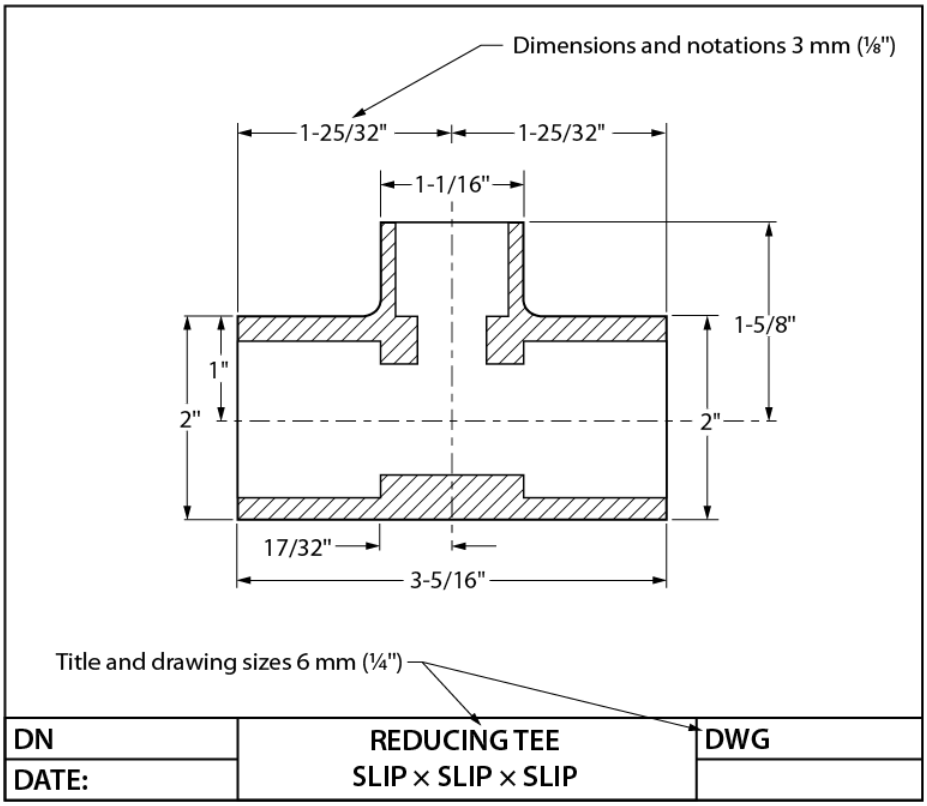

Figure 2.2.2: Standard lettering sizes

2.2: Standard lettering is shared under a CC BY license and was authored, remixed, and/or curated by LibreTexts.

2.3 Abbreviations

Abbreviations are commonly used to help simplify a drawing and conserve space. Although many fields share common abbreviation conventions, there are also field- or trades-specific conventions that you will see as you become more specialized.

Here is a common list of abbreviations that are used on drawings. Each trade will have specific abbreviations from this list, and therefore a set of drawings will usually include an abbreviation key.

AB	anchor bolt	HLS	holes	REF	reference
ABT	about	HSS	hollow structural steel	REQ'D	required
AUX	auxiliary	ID	inside diameter	REV	revision
BC	bolt circle	IN	inches	RF	raised face
BBE	bevel both ends	INT	internal	RH	right hand
BCD	bolt circle diameter	ISO	International Standards Organization	SCH	schedule
BOE	bevel one end	KP	kick plate	SI	International System of Units
BE	both ends	LH	left hand	SPECS	specifications
BL	baseline	LAT	lateral	SQ	square
BM	benchmark	LR	long radius	SM	seam
Btm	bottom	LG	long	SMLS	seamless
BP	base plate	MB	machine bolt	S/S	seam to seam
B/P	blueprint	MS	mild steel	SO	slip on
BLD	blind	MIN	minimum	SEC	section
C/C	center to center	MAX	maximum	STD	standard
COL	column	MAT'L	material	SS	stainless steel
CPLG	coupling	MISC	miscellaneous	SYM	symmetrical
CS	carbon steel	NC	national course	T	top
C/W	complete with	NF	national fine	T&B	top and bottom
CYL	cylinder	NO	number	T&C	threaded and coupled
DIA	diameter	NOM	nominal	THD	threaded
DIAG	diagonal	NTS	not to scale	TBE	threaded both ends
DIM	dimension	NPS	nominal pipe size	TOE	threaded one end
DWG	drawing	NPT	national pipe thread	THK	thick
EA	each	O/C	on center	TOL	tolerance
EL	elevation	OA	overall	TOC	top of concrete
EXT	external	OD	outside diameter	TOS	top of steel
F/F	face to face	OR	outside radius	TYP	typical
FF	flat face	OPP	opposite	U/N	unless noted

FLG	flange	PAT	pattern	VERT	vertical
FW	fillet weld	PBE	plain both ends	WD	working drawing
Ga	gauge	POE	plain one end	WP	working point
Galv	galvanized	PSI	pounds per square inch	WT	weight
HVY	heavy	PROJ	project	W/O	without
HH	hex head	RD	running dimension	XH	extra heavy
HR	hot rolled	R or RAD	radius	XS	extra strong
HT	heat treatment	RND	round		

2.3 Abbreviations is shared under a CC BY license and was authored, remixed, and/or curated by LibreTexts.

2.4: Principles of Dimensioning

A good sketch of an object is one that you can use as a blueprint to manufacture the object. Your sketch must show all the necessary dimensions of the part, locate any features it may have (such as holes and slots), give information on the material it is to be made from, and if necessary, stipulate the processes to be used in the manufacture of the object.

Three principles of dimensioning must be followed:

1. Do not leave any size, shape, or material in doubt.
2. To avoid confusion and the possibility of error, no dimension should be repeated twice on any sketch or drawing.
3. Dimensions and notations must be placed on the sketch where they can be clearly and easily read.

Consider Figure **2.4.1** and note whether these three dimensioning principles have been followed.

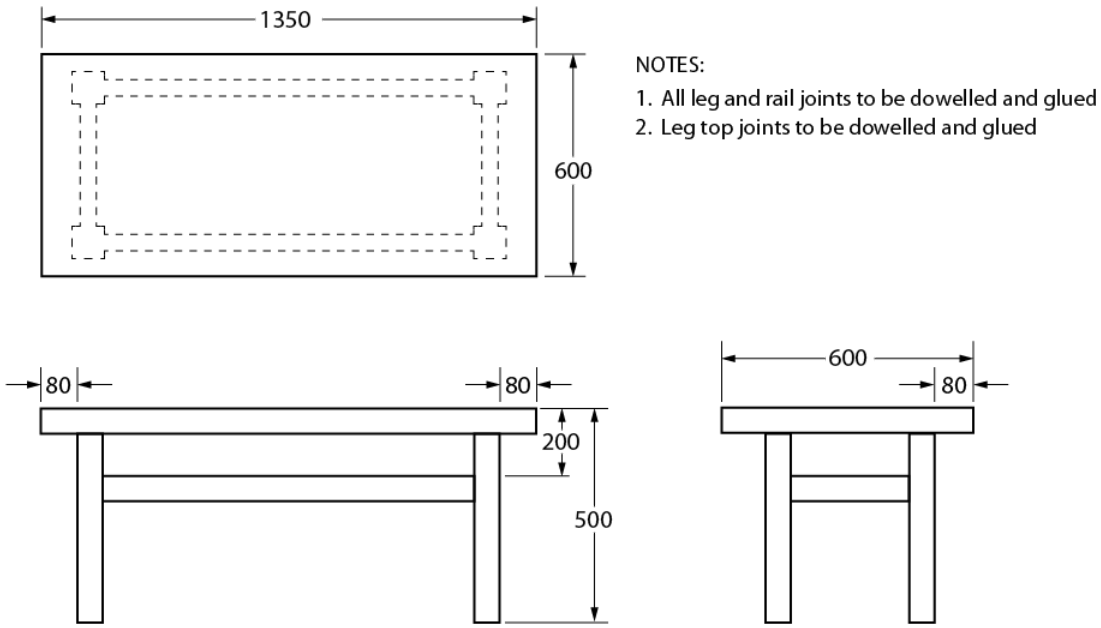

Figure **2.4.1**: Shop table

Although the dimensions and notations are clear and easy to read in Figure 14, the following points should be made:

- Leg and rail sizes have not been shown.
- The thickness of the top has not been given.
- The material has not been given as a notation.
- The 600 dimension has been repeated.
- The type of finish to be used has not been given.
- Note 2 is redundant.

The sketch of the shop table is far from complete, and the table could not be made without a lot of guesswork. Figure **2.4.2**, on the other hand, shows a completed sketch that, along with the necessary notes and dimension information, can be readily used for construction purposes.

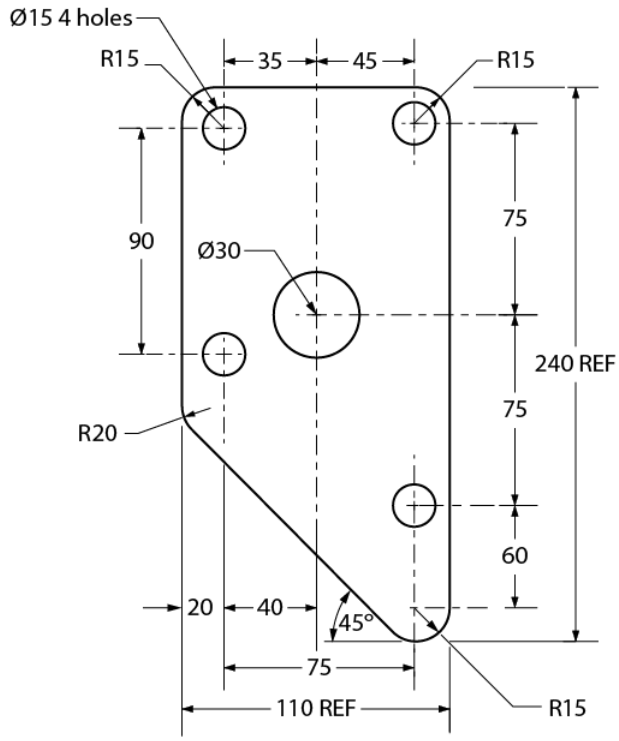

Figure 2.4.2: Dimensioning

Rules of dimensioning

For most objects, there are three types of dimensions:

- size dimensions
- location dimensions
- notation dimensions

Figure 2.4.3 illustrates the difference between size and location dimensions. (S = size dimension and L = location dimension).

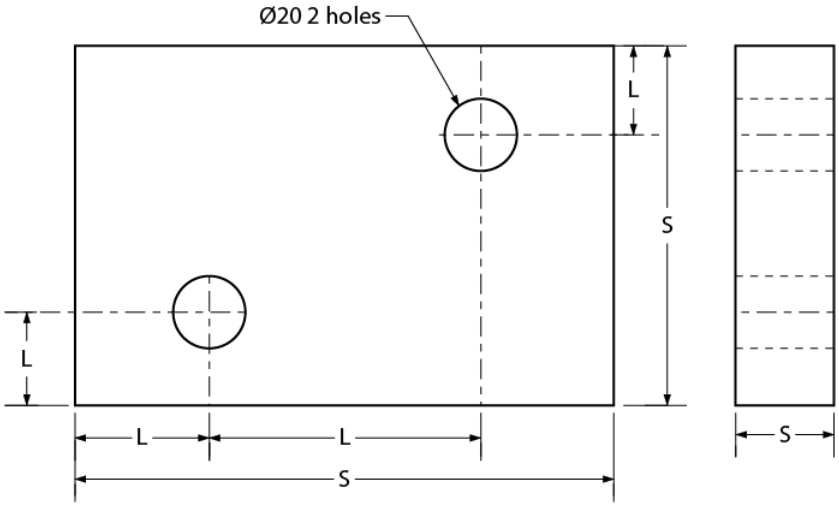

Figure 2.4.3: Shim Plate

Size dimensions are necessary so that the material size of the object can be determined. Location dimensions are necessary so that parts, holes, or other features can be positioned in or on the object. Notation dimensions describe the part, hole, or other feature with a short note, such as the “ø20 2 holes” notation (see Figure 16). Keep these points in mind:

- Keep all dimension lines at least 10 mm (3/8") clear of object lines wherever possible.
- Try to group related dimensions rather than scattering them.
- Try to keep dimensions off the views themselves.
- Separate one line of dimensions from another line of dimensions or from a notation by a space of at least 10 mm (3/8").
- Leave a space of approximately 3 mm (1/8") between the object outline and the beginning of any extension line.
- Keep arrowheads slim and neat.
- Never dimension to a hidden line.
- Draw leader lines at an angle when intersecting object lines to avoid confusing them with extension lines.

Figure 2.4.4 illustrates good placement of dimensions and notations. Note the placement of extension lines and the use of center lines to locate features such as holes. Also, note the shape and size of arrowheads.

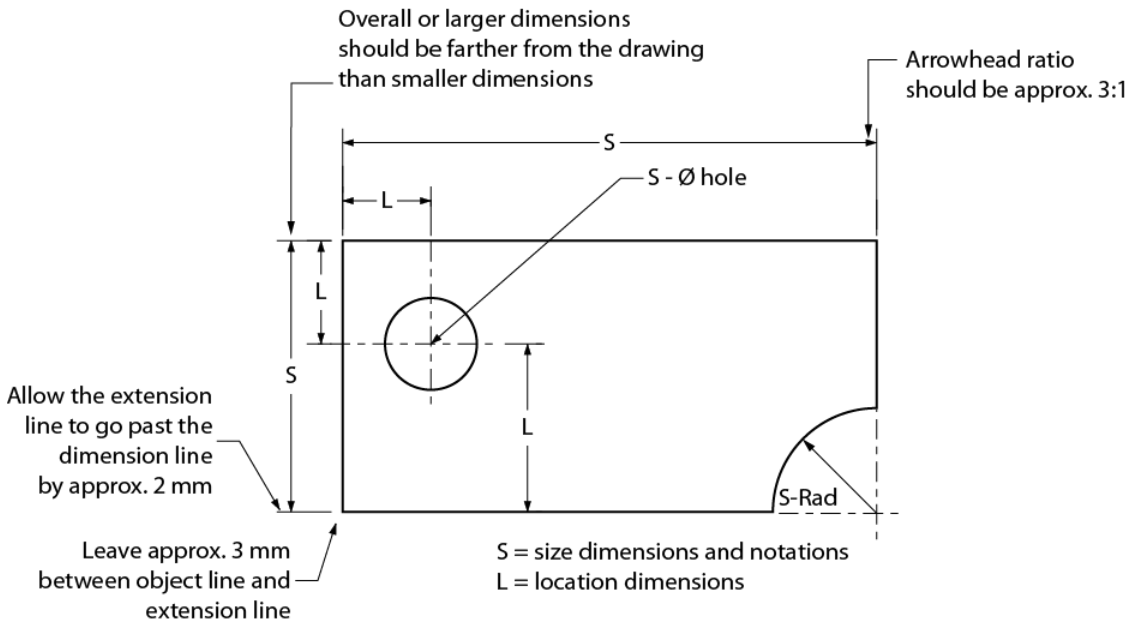

Figure 2.4.4: Extension line usage

Dimensioning systems

Two systems are used for dimensioning drawings. They are aligned and unidirectional systems. Figure 2.4.5 shows examples of both systems. As you can see, the aligned system requires that you turn the drawing on its side, whereas the unidirectional system may be read from the normal reading position. For most drawings, the unidirectional system is preferred, as it is easier to read; however, architectural drawings still use the aligned system.

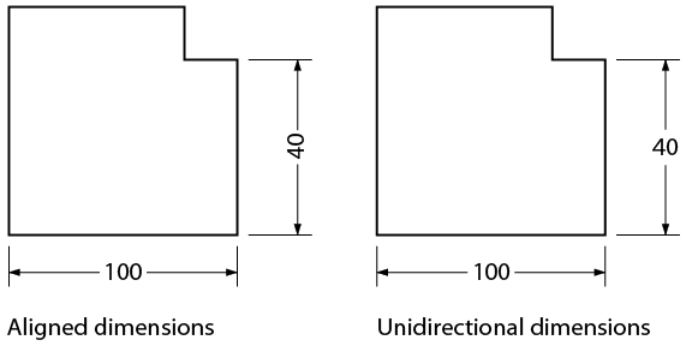

Figure 2.4.5: Dimensioning systems

Systems of measurement

You may be required to sketch or read drawings constructed with either metric (SI) or imperial dimensions. You may also encounter drawings that are dual-dimensioned and contain both systems of measurement on the same drawing.

SI system of measurement

The SI system of measurement has become the official standard in Canada. It is common practice on shop drawings to express all metric dimensions in millimeters. Figure 2.4.6 shows a detail drawing of a connector arm using metric measurements. All metric drawings should contain a note specifying that all dimensions are in millimeters.

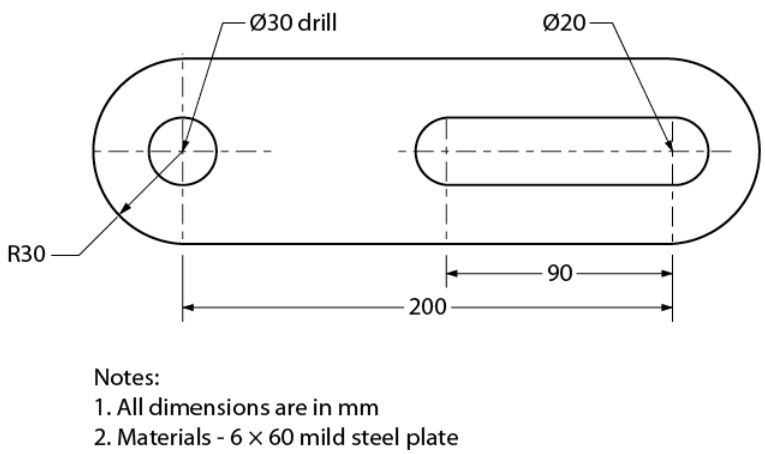

Figure 2.4.6: Connector arm – metric measurement

Imperial system of measurement

An imperial drawing may use the decimal-inch system, the fractional-inch system, or feet and inches.

- In the decimal-inch system, very accurate dimensions for items such as machine parts are expressed as decimals of an inch, such as 0.005". In words, this reads as five one-thousandths of an inch.
- In the fraction-inch system, dimensions for things such as steel and lumber sizes are expressed as inches and fractions of an inch from as small as 1/64" (Figure 2.4.7). Most drawings that are dimensioned in the imperial system will use the fraction-inch system.

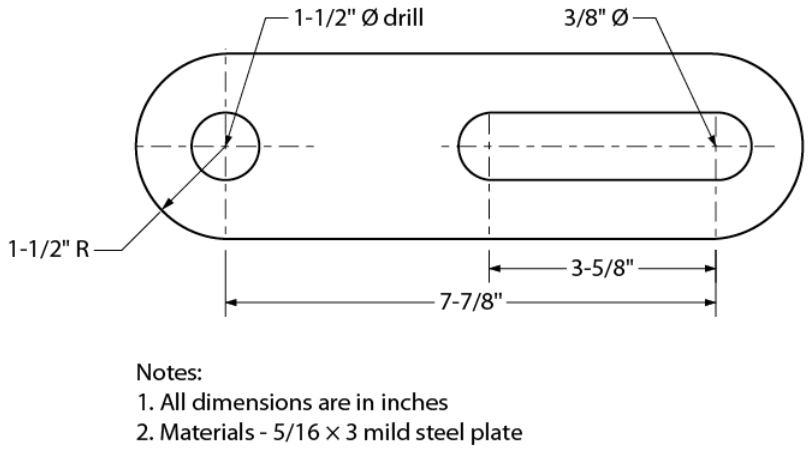

Figure 2.4.7: Connector arm – imperial measurement

In the feet-inch system (Figure 2.4.8), the dimensions of large structures such as machine frames and buildings are expressed in feet and inches, such as 2'-6" (two feet, six inches).

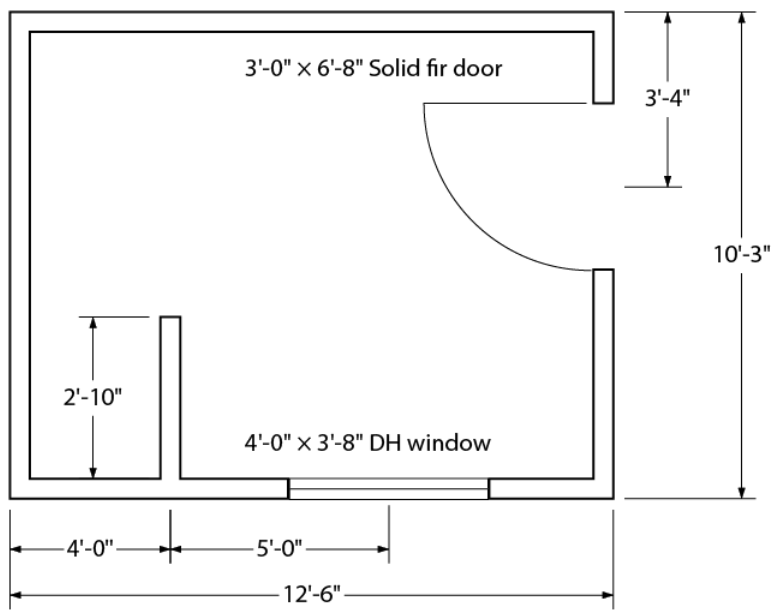

Figure 2.4.8: Fuel storage shed

Dimensioning orthographic sketches

The following are rules and procedures for dimensioning single- and multi-view sketches:

- Place dimensions on views that show parts of features as solid outlines. Avoid dimensioning hidden lines wherever possible.
- Try to keep dimensions between views. Leave adequate room between views when you begin your sketch.
- Keep the smallest dimensions nearest to the object outline.
- Diameters in metric measurement should be denoted on a sketch using the symbol ø (e.g., ø20 – 2 holes). A radius should be denoted using the letter R (e.g., R 25).
- Diameters in imperial measurements may be denoted on a sketch by the symbol ø or the abbreviation DIA (e.g., 3" ø DRILL or 4½" DIA). A radius may be denoted using the letter R or the abbreviation RAD (e.g., 3" R or 6½" RAD).

- Arrows carrying notations should always point toward the center of circular objects.
- Arrows should always point toward a circle center when dimensioning a diameter and away from the center when dimensioning a radius.

2.4: Principles of Dimensioning is shared under a CC BY license and was authored, remixed, and/or curated by LibreTexts.

2.E: Self-Test 2

Self-Test 2

1. Which line in a drawing should be the darkest and thickest?
    1. Center line
    2. Hidden line
    3. Object line
    4. Dimension line
2. This line in a drawing is a broken line of alternating short and long dashes.
    1. Center line
    2. Hidden line
    3. Phantom line
    4. Compression line
3. What is the name of a line in a drawing that shows a hidden feature?
    1. Buried line
    2. Missing line
    3. Hidden line
    4. Concealed line
4. A break line shows where part of an object in a drawing has been removed.
    1. True
    2. False
5. A drawing should have all dimensions shown in every view.
    1. True
    2. False
6. Which line is used to show notes or specifications in a drawing?
    1. Leader line
    2. Object line
    3. Extension line
    4. Phantom line
7. How are alternate positions of moving parts shown in a drawing?
    1. With a break line
    2. With a hidden line
    3. With an object line
    4. With a phantom line
8. What does a sectional view in a drawing normally show?
    1. Outside of a part
    2. Inside dimensions
    3. Internal holes and slots
    4. Internal features of a part
9. What do the arrows that locate a sectional view in a drawing indicate?
    1. Side the part is cut on
    2. Internal holes and slots
    3. Direction of the standard view
    4. Direction of observation when the section is drawn
10. In the drawing below, indicate whether the dimensions shown by letters D2 and D4 are size dimensions, no dimensions, location dimensions, or notation dimensions.

1. Size dimensions
2. No dimensions
3. Notation dimensions
4. Location dimensions

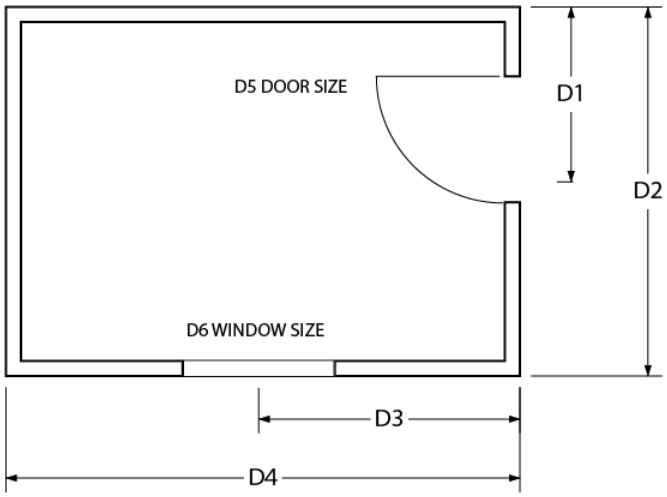

2.E: Self-Test 2 is shared under a CC BY license and was authored, remixed, and/or curated by LibreTexts.

CHAPTER OVERVIEW

3: Use scale rulers to determine actual dimensions from drawings

3.0: Prelude to Scales

3.2: Metric Scales

3.3: Obtain dimensions from drawings

3.E: Self Test 3

Untitled Page 19

3: Use scale rulers to determine actual dimensions from drawings is shared under a CC BY license and was authored, remixed, and/or curated by LibreTexts.

3.0: Prelude to Scales

Learning Task 3

Use scale rulers to determine actual dimensions from drawings

Scale drawings are accurate and convenient visual representations made and used by engineers, architects, and people in the construction trades. The accuracy is achieved because the drawing is proportional to the real thing. The convenience comes from the size of the drawing. It is large enough to provide the desired detail but small enough to be handy.

The flexibility to draw proportionally in different sizes is provided by scales. For the purposes of representation, we will only be concerned with reduction scales. Reduction scales make the drawing smaller than the object. The kinds of rulers we will be discussing for making scaled drawings are the architect's scale and the metric scale, both shown in Figure 1.

Architect's scale ruler

Metric scale ruler

1. Architect's and metric rulers

   The scale of the drawing is always written on the drawing, unless the drawing is not drawn to scale. In the latter case, this will be indicated by the "not to scale" abbreviation (NTS). The scale is the ratio of the size of the drawing to the object. For drawings smaller than the object, the ratio is that of a smaller distance to a larger one.

   The architect's scales use ratios of inches to a foot. The most common architect's scale used is 1/4 inch to the foot, written on drawings as:

   Scale 1/4" = 1'-0"

   This means that a line 1/4" long on the drawing represents an object that is one foot long. At the same scale, a line 1½" long represents an object 6' long, because 1½" contains 6 quarter-inches.

   Metric scale ratios use the same units in both ratio terms, resulting in an expression of how many times smaller than the object the drawing is. For example, the standard metric scale ratio that corresponds approximately to ¼" = 1'-0" is written on drawings as "Scale 1:50."

   This means that the object is 50 times as large as the drawing, so that 50 mm on the object is represented by 1 mm on the drawing. For another example, 30 mm on the drawing represents 50 × 30 mm = 1500 mm (or 1.5 metres) on the object.

   Figure 2 lists the scale ratios used for building plans and construction drawings in both metric and the approximate equivalent architectural scale ratios.

Type of Drawing	Common Metric Ratios	Imperial Equivalents and Ratios		Use
Site plan	1:500 1:200	1" = 40'-0" 1/16" =1'-0"	1:480 1:192	○ To locate the building, services and reference points on the site
Sketch plans	1:200	1/16" =1'-0"	1:192	○ To show the overall design of the building ○ To indicate the juxtaposition of the rooms and locate the positions of piping systems and components
General locations	1:100	1/8" =1'-0"	1:96	
Drawings	1:50	1/4" =1'-0"	1:48	
Construction details	1:20 1:10 1:5 1:1	1/2" =1'-0" 1" = 1'-0" 3" =1'-0" Full size	1:24 1:12 1:4 1:1	○ To show the detail of system components and assemblies

2. Preferred scales for building drawings

3.0: Prelude to Scales is shared under a CC BY license and was authored, remixed, and/or curated by LibreTexts.

3.2: Metric Scales

A triangular metric scale is similar to the architectural scale in that it has six edges, but it has only one scale ratio per edge. The ratio is marked at the left end of the scale. For example, the scale of 1:50 means that 1 mm on the drawing represents 50 mm on the object. This means that the object is 50 times larger than the drawing of it. An object 450 mm long would be represented by a line 9 mm long (450 mm/50).

Figure 7 shows one of the three sides of a metric scale. The scale labelled 1:50 is read from left to right, from 0 to 15 m. The 1:5 scale (on the bottom) can also be read from left to right (0 to 600 mm) by turning the scale around.

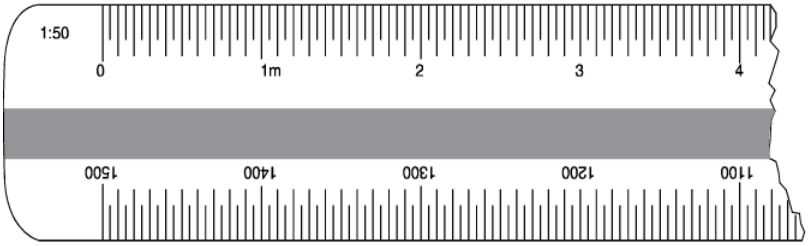

7. One side of a metric ruler

The ratios most often used in drawings are 1:100 for larger buildings, 1:50 for smaller buildings, and 1:20 for details.

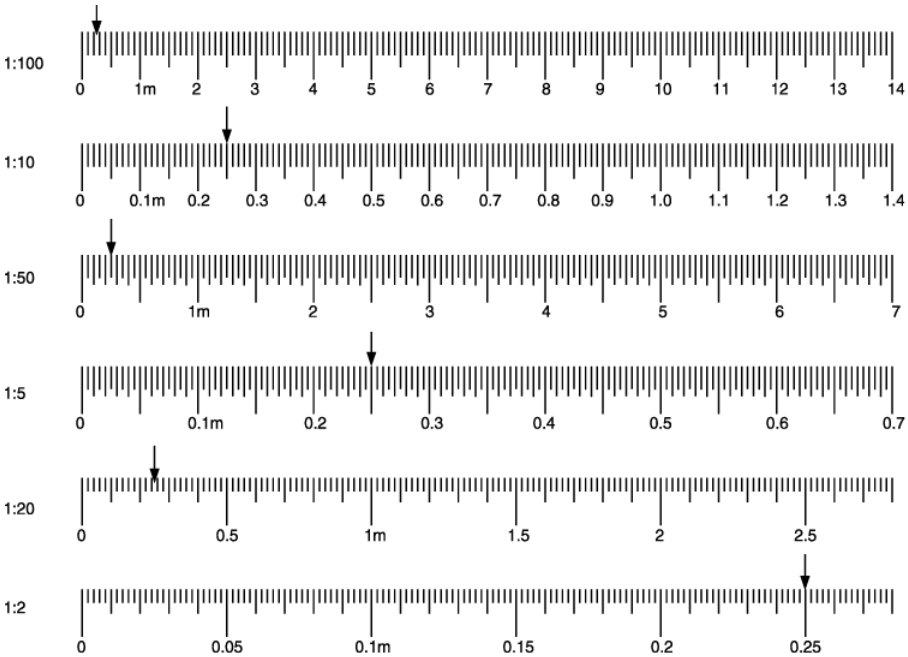

8. Metric scales marked at 250 mm

The length of an object represented on a drawing in a metric scale is found by measuring the drawn object with a metric ruler of the proper scale. You can also measure the drawing with any metric tape measure and multiply that by the scale ratio.

3.2: Metric Scales is shared under a CC BY license and was authored, remixed, and/or curated by LibreTexts.

3.3: Obtain dimensions from drawings

The best way to get exact dimensions from drawings is to use the explicit dimensions (in millimeters or in feet and inches) written between the dimension lines. Any measurements that you need should be somewhere on the drawings. Drawings normally only give each dimension once. If there are a number of parallel lengths, only one will have a measurement. To find the dimension you need, you may need to refer to other views or you may have to add or subtract other dimensions.

Measuring lines on a drawing to determine the measurement is not an accurate way to extract dimensions. This is because the drawing is only a representation and may not be exact. Photocopies of drawings may not be to the scale of the original.

The scale of the drawing and your accuracy in measuring will lead to inaccuracies. For example, if the scale of a drawing is 1/8" = 1'-0", an error of 1/32" in measuring the plan amounts to 3" of error in the object measured. Detail drawings permit more exactness because they are proportionately larger. Details, however, often require more exactness and usually contain any needed dimensions.

When accuracy is not required and approximate dimensions are adequate, measuring plans is a quick method of taking off material for estimating the cost of a job. In such cases, 10% is usually added for cut-off and waste allowance.

Measuring plans is not accurate enough for measuring materials for cutting and installation purposes.

If you use the scale of the drawing, it will be simple to read off the measurements. However, in the field you will often need approximate measurements and the only measuring tool at hand will be a measuring tape.

A steel pocket tape measure has a movable hook on the end that allows accurate measuring both when butted against a surface or when hooked on the end of an object (Figure 9). The end of the flexible tape itself is shortened to allow for the hook.

9. Tape measure with movable hook

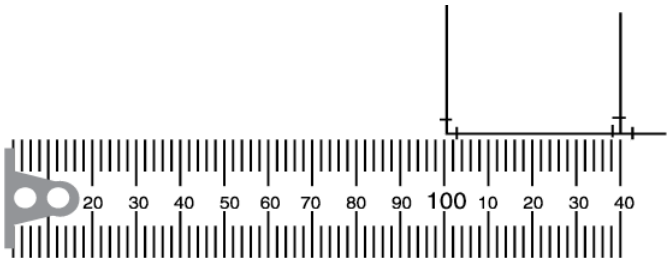

10. Measuring metric drawings

The reciprocals of all standard scales used by architects are shown in Figure 11.

Scale	3/32	1/8	3/16	1/4	3/8	1/2	3/4	1	1 1/2 (3/2)	3
Reciprocal	32/3	8	16/3	4	8/3	2	4/3	1	2/3	1/3

11. Reciprocals of standard scales

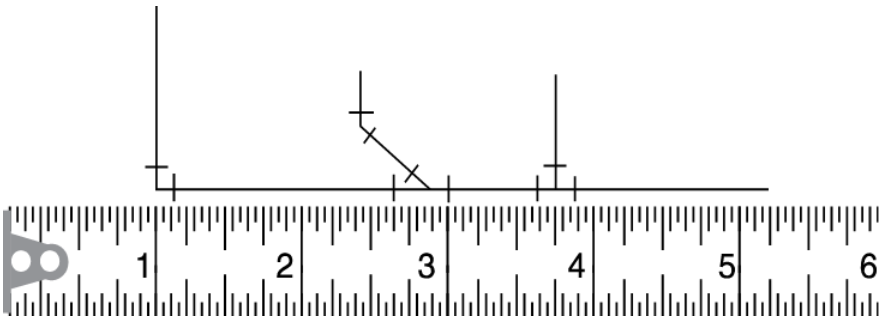

12. Reading lengths of piping runs

Now complete the Learning Task Self-Test.

3.3: Obtain dimensions from drawings is shared under a CC BY license and was authored, remixed, and/or curated by LibreTexts.

3.E: Self Test 3

Self-Test 3

1. Scale rulers are available in both imperial and metric.
    1. True
    2. False
2. Which scale ruler would be most likely to have a ¼" to 1' scale on it?
    1. Metric scale ruler
    2. Architect’s scale ruler
    3. Civil engineer’s scale ruler
    4. Mechanical engineer’s scale ruler
3. How many scale ratios per edge do metric scale rulers have?
    1. 1
    2. 2
    3. 3
    4. 4
4. What is the best way to get exact dimensions from a drawing?
    1. Measure using a tape measure.
    2. Exact dimensions aren’t important.
    3. Scale it with your combination square.
    4. Use the dimension written between the dimension lines.
5. If a line measures 4½", what is the equivalent in 1/4"=1' scale?
    1. 9"
    2. 18'
    3. 9'
    4. 18"
6. If a line measures 63/8", what is the equivalent in 1/8" = 1' scale?
    1. 27"
    2. 48'
    3. 4'3"
    4. 51'
7. What is the measurement of the line below?

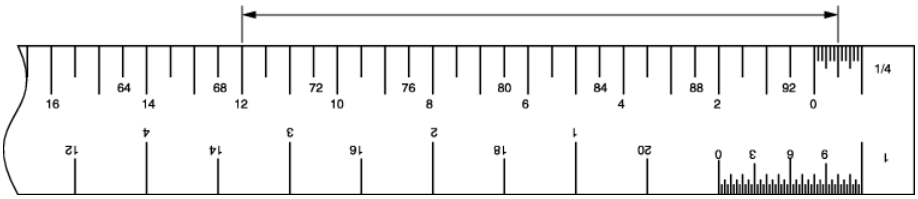

    1. 68'
    2. 6'3"
    3. 80'
    4. 12'6"
8. What is the measurement of the line below?

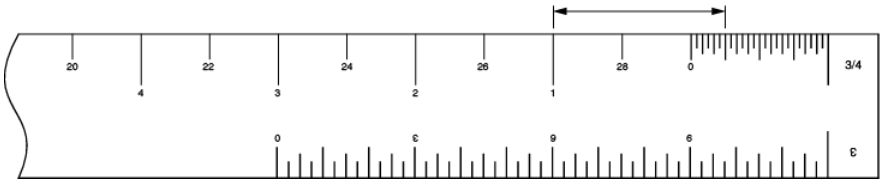

1. 1'3"
2. 1'6"
3. 27'3"
4. 27'6"

9. What is the measurement of the line below?

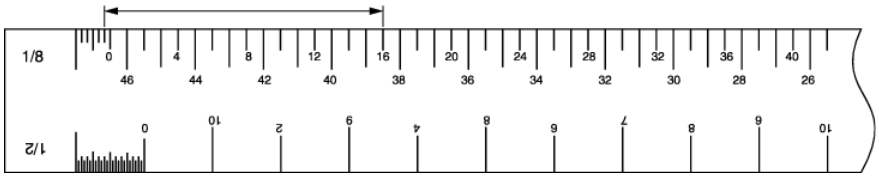

1. 16'2"
2. 16'4"
3. 16'6"
4. 16'9"

10. What is the measurement of the line below?

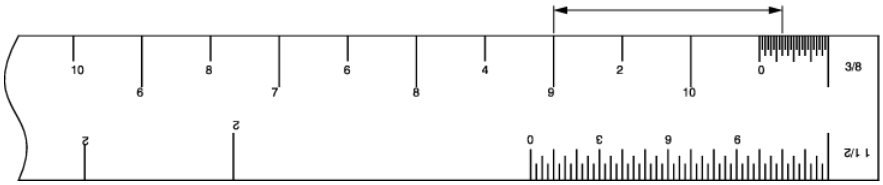

1. 3'4"
2. 3'7"
3. 9'4"
4. 13'7"

11. What is the measurement of the line below?

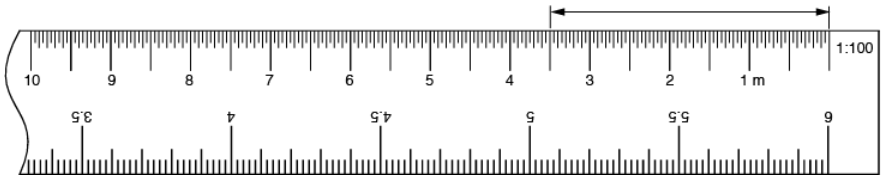

1. 35 mm
2. 3.5 m
3. 35 m
4. 350 m

12. What is the measurement of the line below?

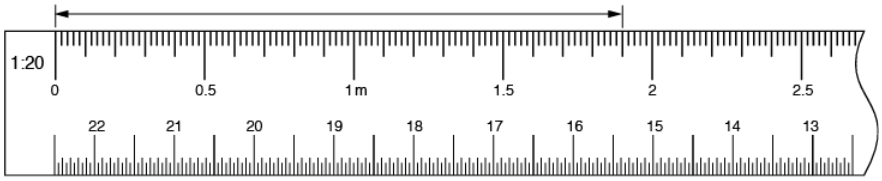

1. 0.19 m
2. 1.9 m

3. 19 m
4. 190 m

13. What is the measurement of the piping run below in 1/2"=1' scale?

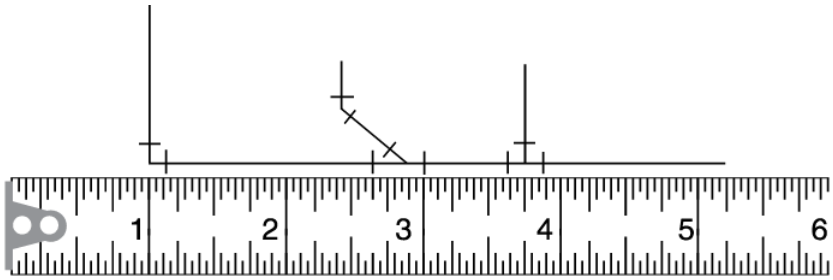

1. 8'6"
2. 10'6"
3. 17'
4. 34'

3.E: Self Test 3 is shared under a CC BY license and was authored, remixed, and/or curated by LibreTexts.

Untitled Page 19

Architect’s (imperial) scales

Traditional architectural measurements of length are written very precisely in feet and inches using the appropriate symbols for feet and inches separated by a dash (e.g., 4'-3 ½" and 7'-0"). This is the way that all imperial measurements are written on construction drawings.

Listed below are the scales found on the architect’s triangular scale ruler.

1. 3/32" =1'-0"
2. 3/16" = 1'-0"
3. 1/8" = 1'-0"
4. ¼" = 1'-0"
5. ¾" = 1'-0"
6. 3/8" = 1'-0"
7. 1" =1'-0"
8. ½" = 1'-0"
9. 1½" = 1'-0"
10. 3" = 1'-0"
11. 1" = 1" (full size—use the scale labelled 16)

Figure 3 shows one face of an architect’s imperial triangular scale ruler. There are two edges on each face and each edge contains two scales that run in opposite directions. At each end of an edge, a number or fraction indicates the distance in inches that represents one foot. The top edge is in eighths of an inch from left to right, and in quarters of an inch from right to left. Note that the 1/8" scale from 0 to the right end represents 95 feet, and the ¼" scale from 0 to the left end represents 47 feet.

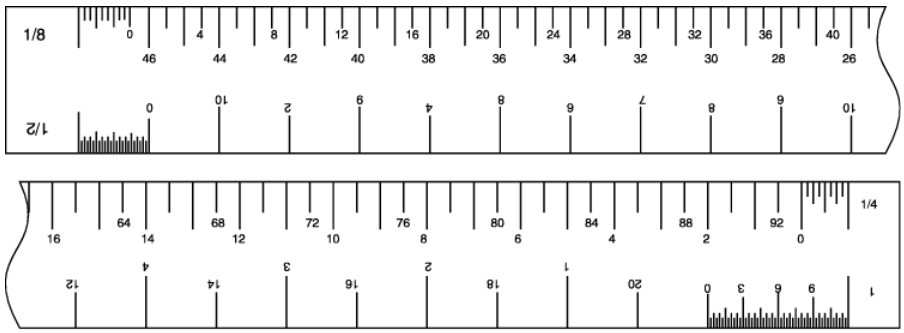

3. One face of an architect’s ruler (NTS)

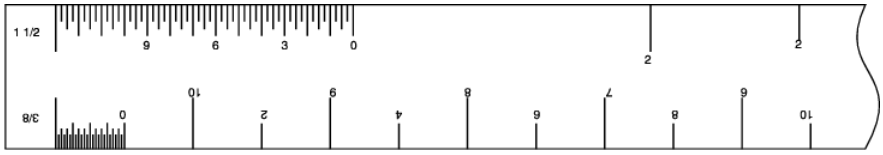

4. Units in an architect’s scale ruler (NTS)

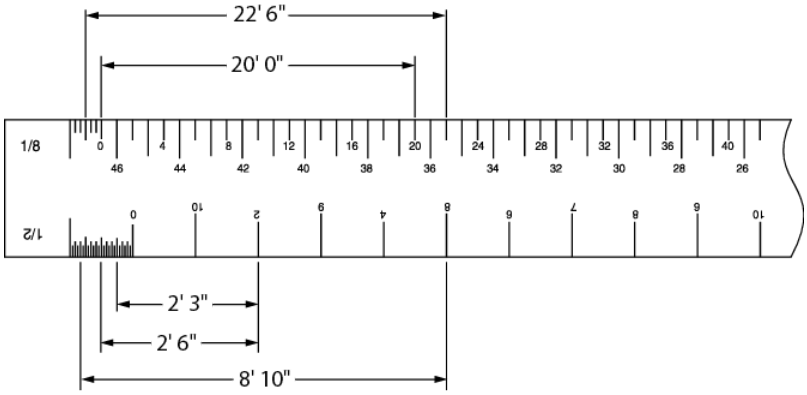

5. Reading dimensions using an architect's ruler (NTS)

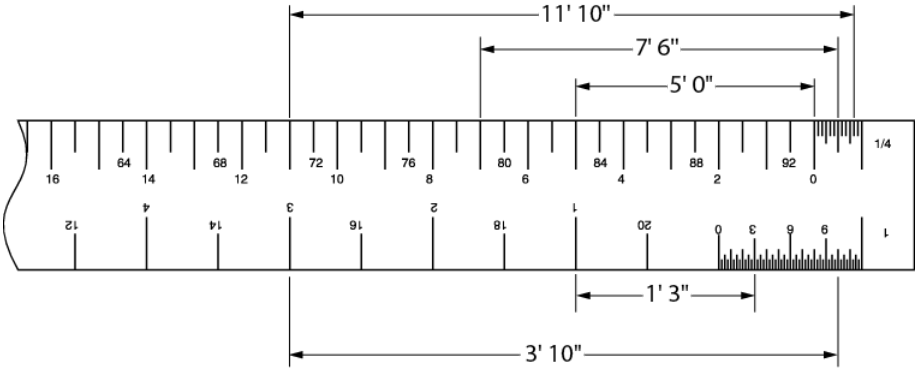

6. Reading dimensions using an architect's ruler (NTS)

Architectural units have feet divided into inches, whereas engineering units divide feet into tenths and hundredths. Engineers' scales are not used to make piping drawings.

Untitled Page 19 is shared under a CC BY license and was authored, remixed, and/or curated by LibreTexts.

CHAPTER OVERVIEW

4: Describe drawing projections

Architectural drawings are made according to a set of conventions, which include particular views (floor plan, section, etc.), sheet sizes, units of measurement and scales, annotation, and cross-referencing.

4.1: Types of views used in drawings
4.E: Self Test 4

4: Describe drawing projections is shared under a CC BY license and was authored, remixed, and/or curated by LibreTexts.

4.1: Types of views used in drawings

Types of views used in drawings

The two main types of views (or “projections”) used in drawings are:

- pictorial
- orthographic

Pictorial views

Pictorial views show a 3-D view of how something should look when completed. There are three types of pictorial views:

- perspective
- isometric
- oblique

Perspective view

A perspective view presents a building or an object just as it would look to you. A perspective view has a vanishing point; that is, lines that move away from you come together in the distance. For example, in Figure 1, we see a road and line of telephone poles. Even though the poles get smaller in their actual measurement, we recognize them as being the same size but more distant.

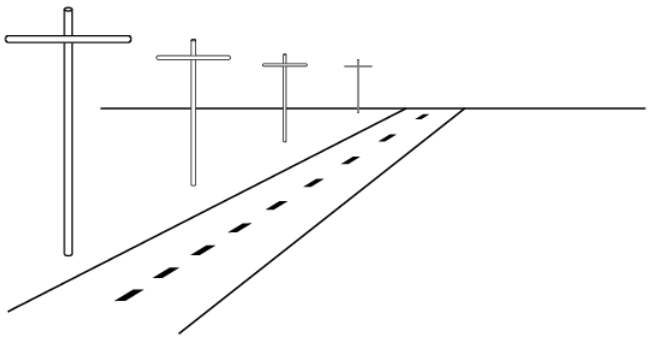

1. Perspective view

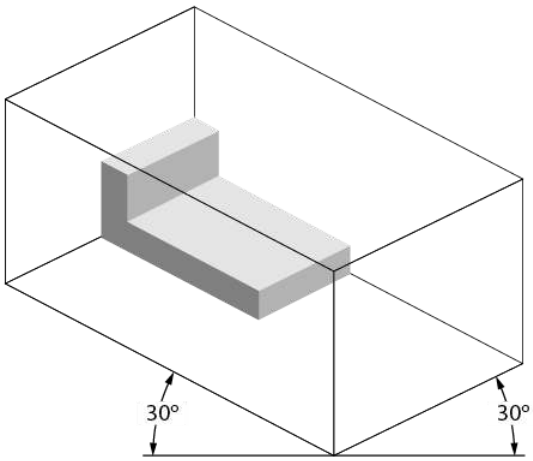

2. An isometric view

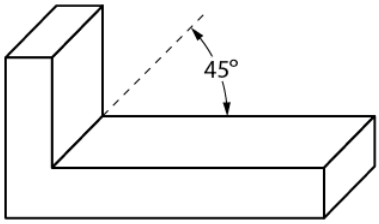

3. Oblique view of the object in Figure 2

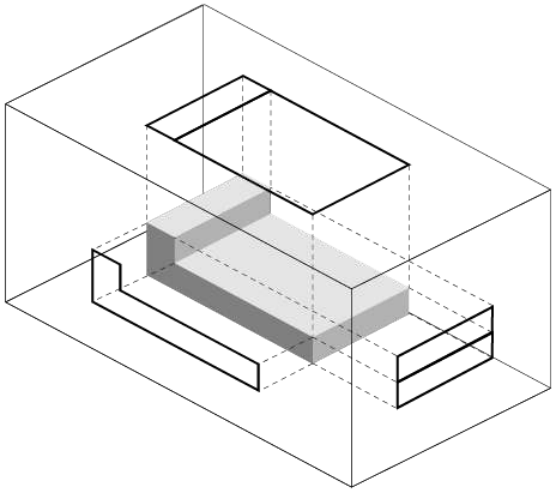

4. Multi-view through a glass box

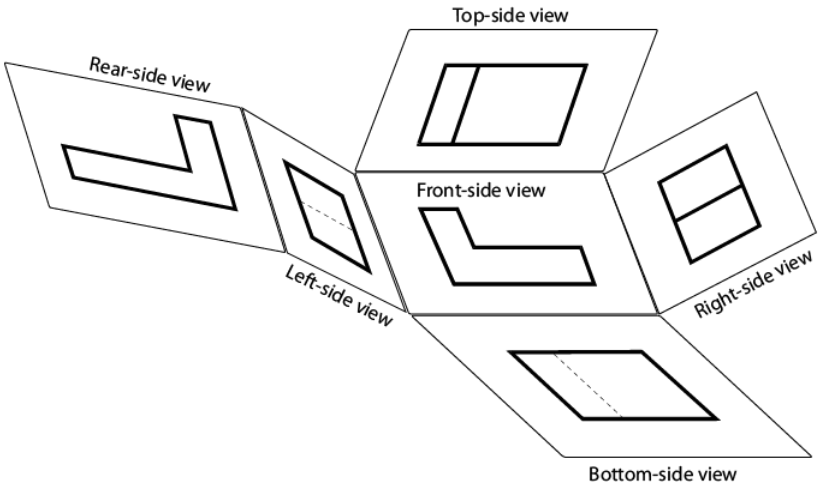

5. Box opened to produce orthographic views

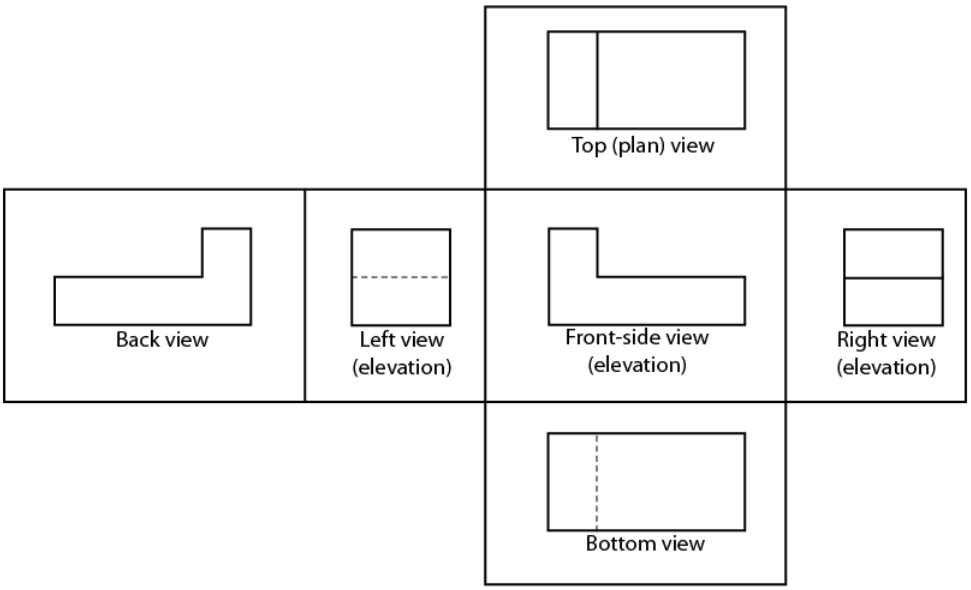

6. Drawing with the glass box flattened out

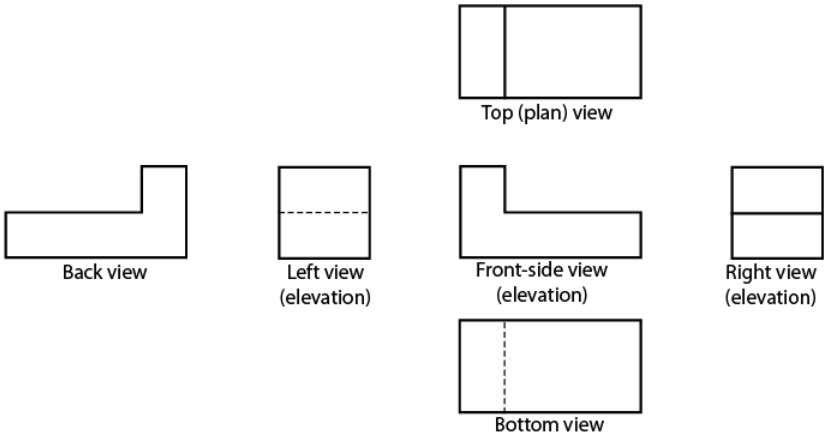

7. Orthographic views of the object in Figure 2

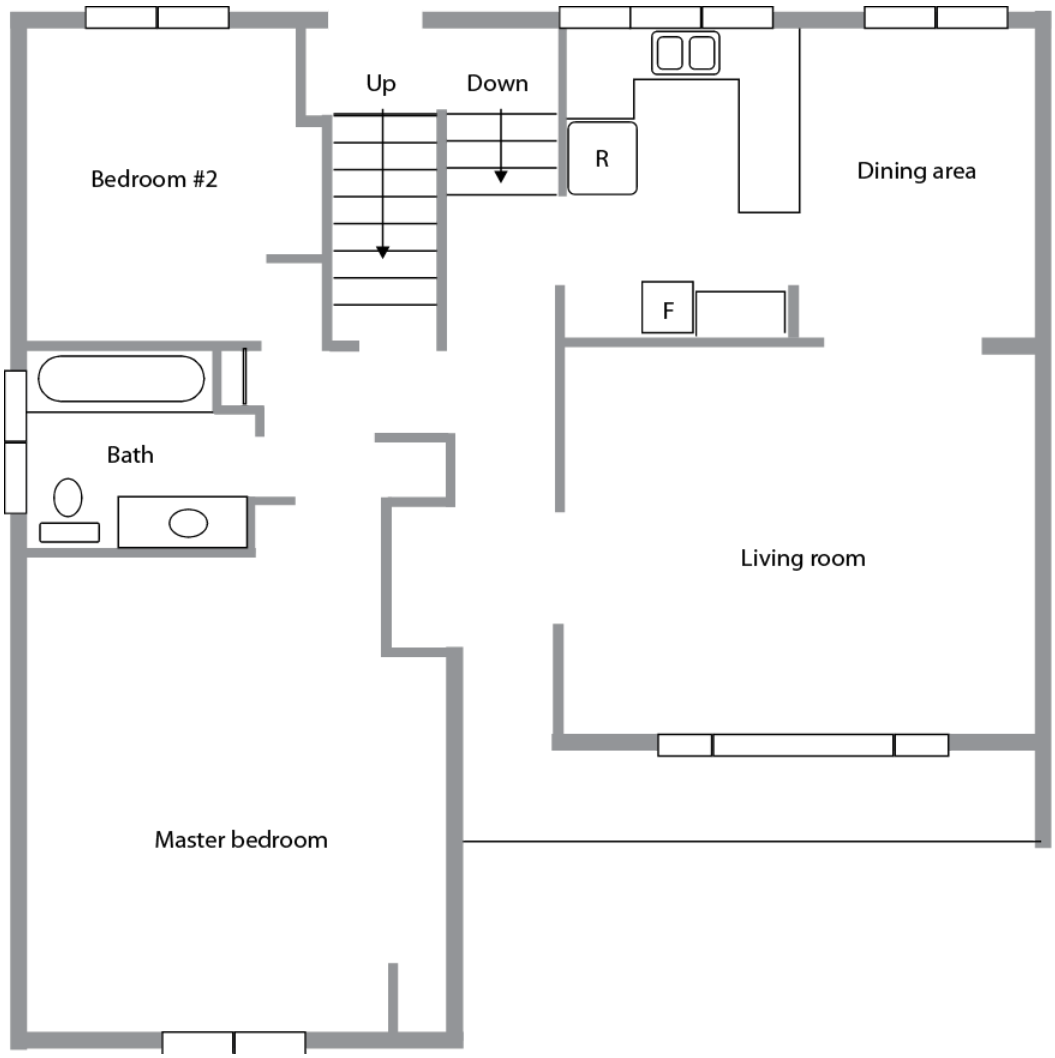

8. Main floor plan of a house

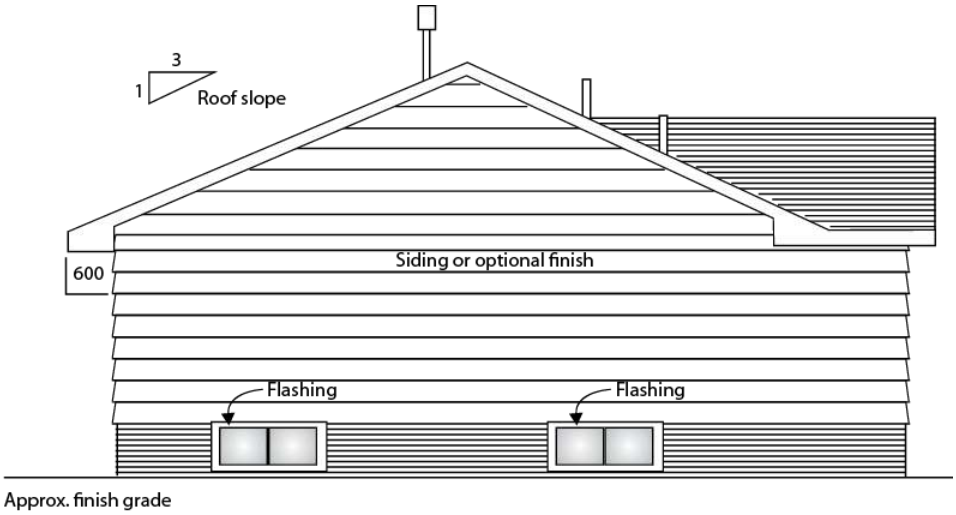

9. Left elevation of house in Figure 8

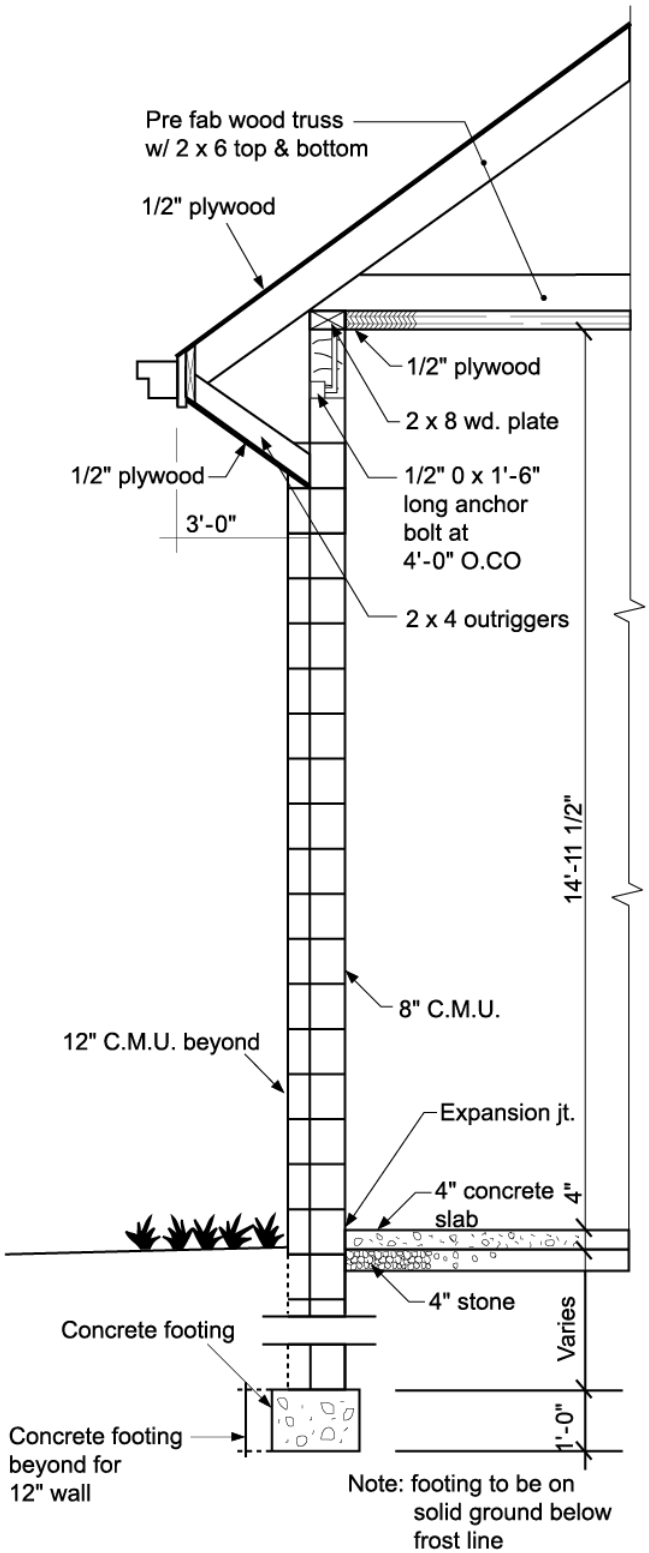

10. Section A-A

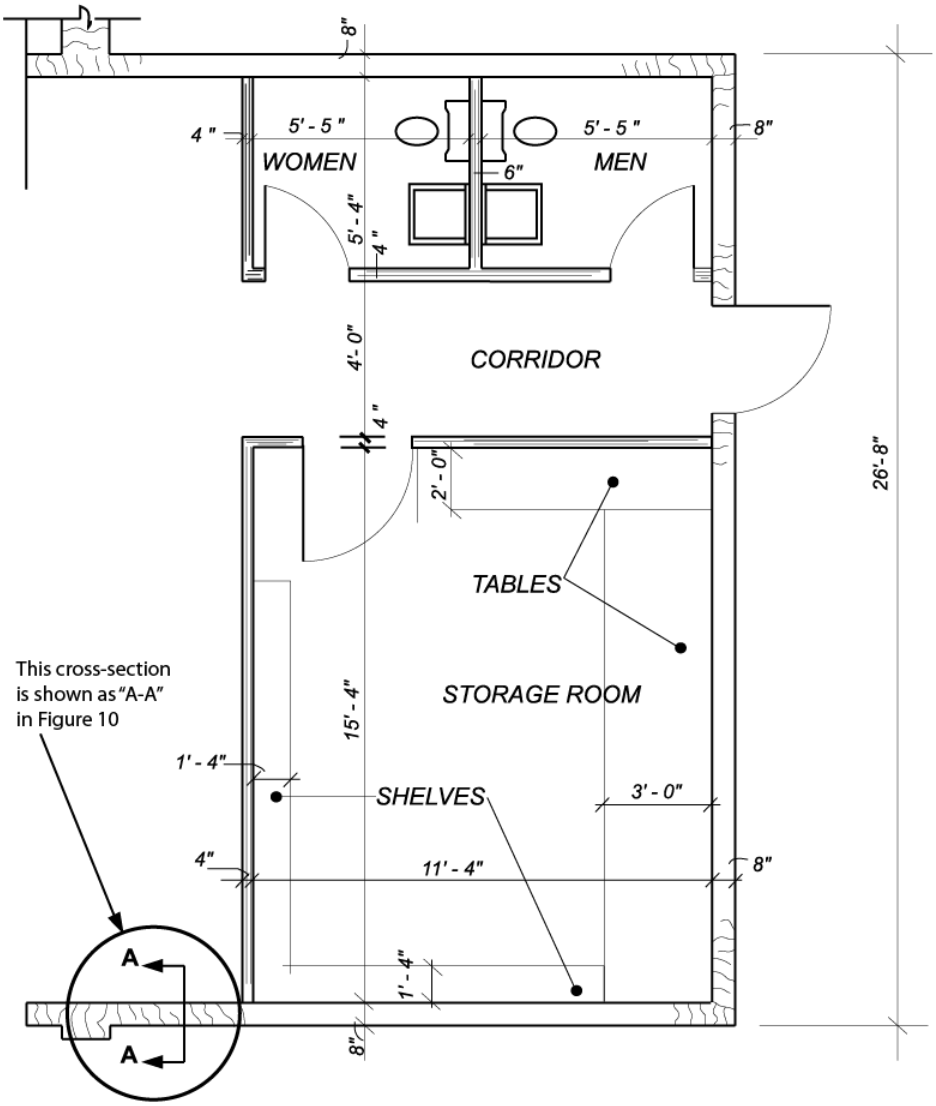

11. Section A-A

Now complete the Learning Task Self-Test.

4.1: Types of views used in drawings is shared under a CC BY license and was authored, remixed, and/or curated by LibreTexts.

4.E: Self Test 4

Self-Test 4

1. A perspective drawing is one form of which type of view?
    1. Oblique
    2. Pictorial
    3. Isometric
    4. Orthographic
2. At what angle should isometric drawings have horizontal lines drawn?
    1. 15°
    2. 30°
    3. 45°
    4. 60°
3. What do perspective drawings always have?
    1. Scale
    2. Dimensions
    3. Hidden lines
    4. Vanishing points
4. At what angles should oblique drawings have lines drawn?
    1. 0°–15°
    2. 15°–30°
    3. 30°–45°
    4. 45°–60°
5. Orthographic projection drawings are three-dimensional drawings.
    1. True
    2. False
6. What is a common name for a top view in an orthographic drawing?
    1. Plan view
    2. Down view
    3. Ceiling view
    4. Elevation view
7. In orthographic projection, how many views are most commonly shown?
    1. 1
    2. 2
    3. 3
    4. 4
8. In the diagrams below, match letters A to L with numbers 1 to 12.

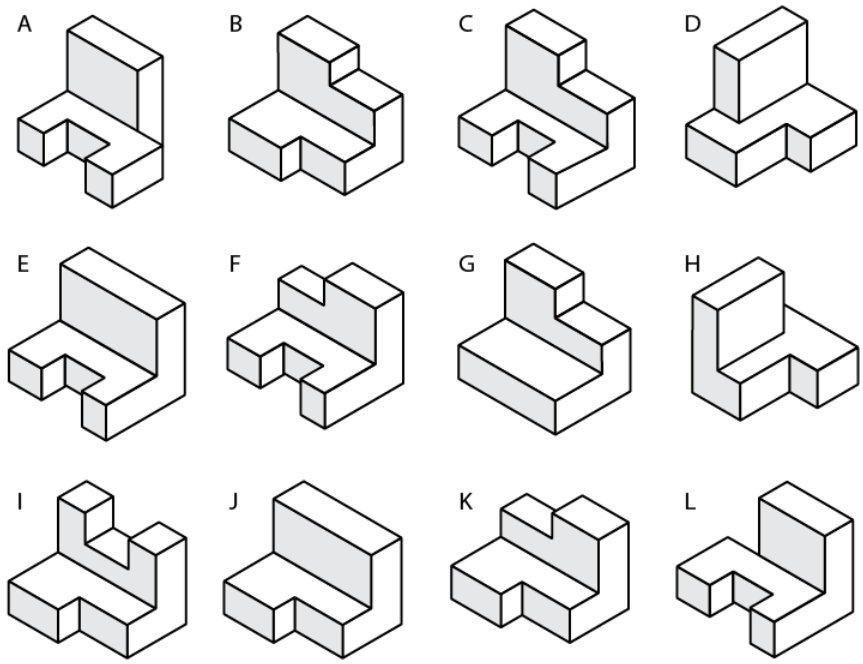

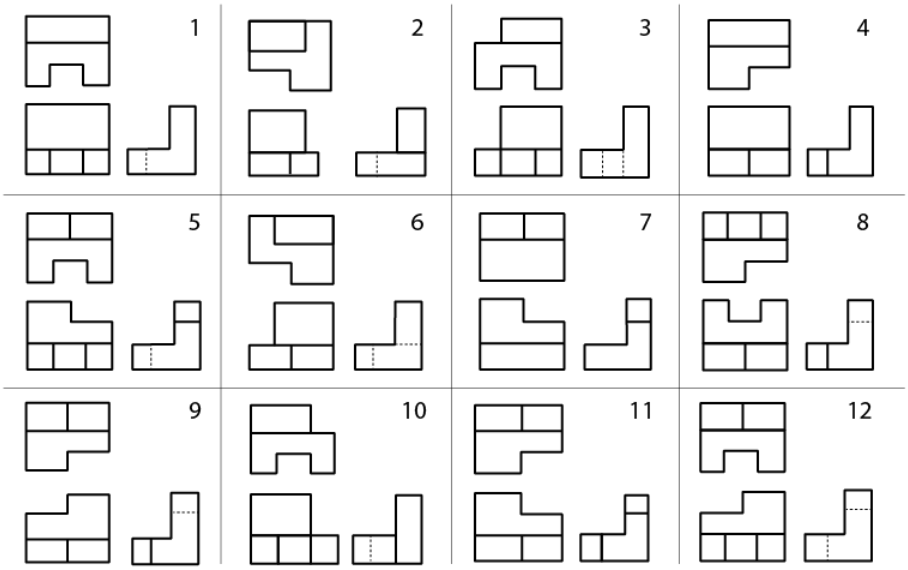

9. What is a top view called in a construction drawing?
    1. Plan view
    2. Floor plan
    3. Floor detail
    4. Building plan
10. What are drawings called that show door and window locations, and other exterior finishes of a building?
    1. Wall drawings
    2. Front drawings
    3. Exterior drawings
    4. Elevation drawings

4.E: Self Test 4 is shared under a CC BY license and was authored, remixed, and/or curated by LibreTexts.

CHAPTER OVERVIEW

5: Interpret mechanical drawings

Interpreting drawings requires the ability to visualize and the ability to interpret what is being drawn and written. The drawing should be studied carefully before beginning any work. The reader should attempt to visualize what is being shown on the drawing and how it will be built. Mistakes can be made when the tradesperson does not take the time to become fully familiar with the drawing.

5.1: Basic layout of a drawing

5.2: Specifications

5.E: Self-Test 5

5: Interpret mechanical drawings is shared under a CC BY license and was authored, remixed, and/or curated by LibreTexts.

5.1: Basic layout of a drawing

The layout of most drawings is similar in that the drawing format has some standard features or components. A typical drawing format will include some or all of these features:

- title block
- bill of materials or material list
- area where the job specifications are listed
- general notes
- reference drawing list
- revision chart

These drawing components are common for some types of drawings; however, other components may be used to show the necessary information for the complete design.

Each of the listed drawing components serves a specific purpose and contains information about the job and its specifications, Figure 5.1.1.

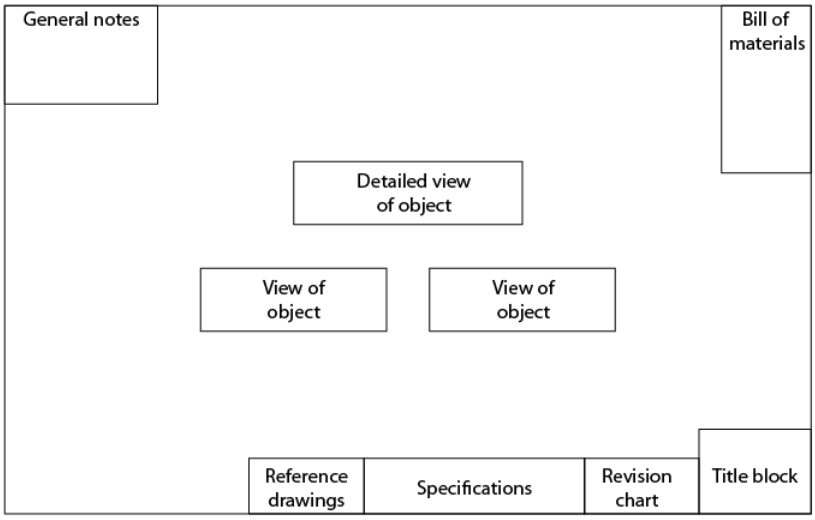

Figure 5.1.1: Drawing format

The following information is a guideline to use each time a new drawing is observed.

Title block

The title block is located in the lower right corner of the drawing and is separated from the main drawing. The contents of the title block will vary from company to company and often differ from drawing to drawing by the same company. As a standard feature, a company will have its name and logo in the title block along with other standard company information, plus particular information such as the customer's name.

The following information can be located in the title block; however, note that not all of the items listed below are necessarily included:

- job title
- name of the item to be fabricated or installed
- name of the customer
- name of the designing engineer or firm
- name or initial of draftsperson and checker
- date drawn
- drawing number
- contract number or job number

- number of revisions, if any, for the drawings
- scale of the drawing

Bill of materials

The bill of materials is usually located in the upper right corner of the drawings, above the title block. As with the title block, the bill of materials is separated from the rest of the drawing and is essentially a table with partitioned rows and columns showing:

- item number or mark number
- quantity
- material description
- material grade
- material weight
- remarks

Revision chart

The revision chart, is often located to the left of the title block, and is bordered off from the rest of the drawing. The revision chart, like the bill of materials, is divided into rows and columns. These columns identify the revision number and give a general description of the revision, who checked the revision, and the date of the revision. It is essential to make sure that you are working from the latest revision, as it is not uncommon for changes to be made from the original drawing.

Drawing specifications

The specifications section of a drawing is used to list all the design information of the item being built or installed. This section is often located to the left of the revision chart. If drawing space is a problem, it may be located elsewhere. A common location is the area below the bill of materials. (The contents of specifications are covered in more detail later.)

Drawing notes

Drawings will often contain two types of notes: general and specific. The general and specific notes should not be confused with the information found in the bill of materials, title block, revision chart, or the drawing specifications.

The general notes are usually located in the upper left corner of the drawing. A general note is information about the fabrication that refers to similar items or procedures throughout the drawing. Specific notes can be found anywhere on the drawing as needed and are most often written with a leader line pointing to the relevant part or area.

Reference drawings

A job requiring more than one drawing is called a drawing set, and it contains two or more drawings. It is a common practice to have a list of all of the drawings that make up the drawing set. This listing is referred to as the reference drawings for the project.

Often work being shown on one drawing requires you to look at or reference other drawings in the set. There is no specific area where the reference drawings are listed; however, two common locations are near the bottom of the print on the far left-hand side, and just below the bill of materials.

Specifications

Specifications in North America form part of the contract documents that accompany and govern the construction of a building. Specifications are written descriptions of the materials and procedures that must be used in constructing a building or system. These specifications translate working drawings into words to ensure that systems will be neither overdesigned nor underdesigned. They tell the contractor exactly which materials must be used. Aside from serving as a manual on how to do the job, the book of specifications has another function: it is a legal document outlining each contractor's obligations. These obligations may include the need to provide fire insurance, to pay for municipal inspections, or to complete the job by a certain deadline.

5.1: Basic layout of a drawing is shared under a CC BY license and was authored, remixed, and/or curated by LibreTexts.

5.2: Specifications

Specifications

Specifications in North America form part of the contract documents that accompany and govern the construction of a building. Specifications are written descriptions of the materials and procedures that must be used in constructing a building or system.

These specifications translate working drawings into words to ensure that systems will be neither overdesigned nor underdesigned. They tell the contractor exactly which materials must be used.

Aside from serving as a manual on how to do the job, the book of specifications has another function: it is a legal document outlining each contractor's obligations. These obligations may include the need to provide fire insurance, to pay for municipal inspections, or to complete the job by a certain deadline.

Specifications are divided into 50 divisions of construction information as defined by the Construction Specifications Institute's (CSI's) MasterFormat. Before 2004, MasterFormat consisted of 16 divisions. MasterFormat is the most widely used standard for organizing specifications and other written information for commercial and institutional building projects in the United States and Canada. It provides a master list of divisions, and section numbers and titles within each division, to follow in organizing information about a facility's construction requirements and associated activities. Standardizing the presentation of such information improves communication among all parties involved in construction projects.

For more information about the 50 CSI divisions, go to:
http://en.Wikipedia.org/wiki/MasterFormat

Now complete the Learning Task Self-Test.

5.2: Specifications is shared under a CC BY license and was authored, remixed, and/or curated by LibreTexts.

5.E: Self-Test 5

Self-Test 5

1. Where is the scale of a drawing found?
    1. In the revisions
    2. In the title block
    3. In the specifications
    4. In the bill of materials
2. The specifications of a drawing serve as a legal contract for the job.
    1. True
    2. False
3. Where on a drawing would information on material grade be found?
    1. In the title block
    2. In the specifications
    3. In the revision chart
    4. In the bill of materials
4. Specifications are a written description of a construction project.
    1. True
    2. False
5. What should the title block on a drawing always include?
    1. Title
    2. Date
    3. Name of the draftsperson
    4. All of the above

5.E: Self-Test 5 is shared under a CC BY license and was authored, remixed, and/or curated by LibreTexts.

CHAPTER OVERVIEW

6: Creating drawings and sketches

Freehand sketching is a very useful skill that can be mastered with practice and by following a few guidelines. The ability to interpret drawings is complemented by the ability to sketch information from a drawing to take to your work location. Sketching is also a valuable tool when no drawing is available and you need to communicate job information to someone else. For freehand sketching, you require a pad of graph paper (8 ½" × 11" sheets with a 5 mm or ¼" grid), a sharp HB pencil, and an eraser. Do not begin any sketch with a dull pencil.

6.1: Creating Drawings and Sketches

6.2: Make isometric sketches of simple rectangular objects

6.3: Sketching Figures with Non-isometric Lines

6: Creating drawings and sketches is shared under a CC BY license and was authored, remixed, and/or curated by LibreTexts.

6.1: Creating Drawings and Sketches

Freehand sketching is an instrumental skill that can be mastered with practice and by following a few guidelines. The ability to interpret drawings is complemented by the ability to sketch information from a drawing to take to your work location. Sketching is also a valuable tool when no drawing is available and you must communicate job information to someone else.

For freehand sketching, you require a pad of graph paper (8 ½ " × 11" sheets with a 5 mm or ¼" grid), a sharp HB pencil, and an eraser. Do not begin any sketch with a dull pencil.

Sketching technique

Sketching provides a quick and straightforward way to express ideas and communicate an object's shape and general size.

Sketching parallel lines

Start by drawing lines parallel to the paper's edges, such as a border line and title block. Use your finger as a guide when you draw along the grid line on the sketch pad (Figure 6.1.1). Letting the end of your little finger run down the edge of the paper pad as you draw will steady your hand and make it easier to get a straight line.

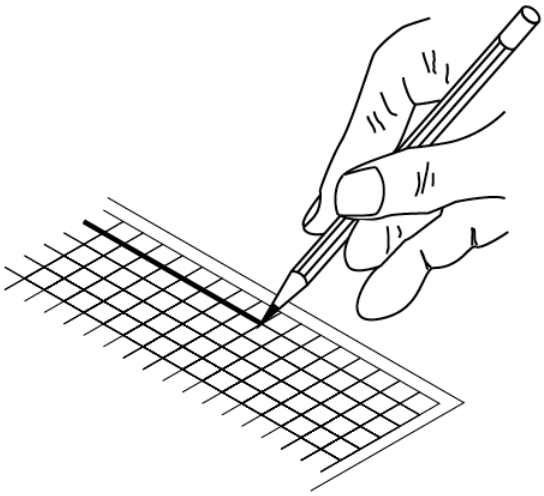

Figure 6.1.1: Sketching a parallel vertical line

Sketching non-parallel lines

When sketching lines that are not parallel to the sides of the paper, turn the paper around so that the line you wish to draw is either straight up and down in front of you or straight across the sheet of paper.

Drawing lines this way rather than at an angle across the sheet is much easier. Let the side of your little finger rest on the paper as you draw. This will help you steady your hand (Figure 6.1.2).

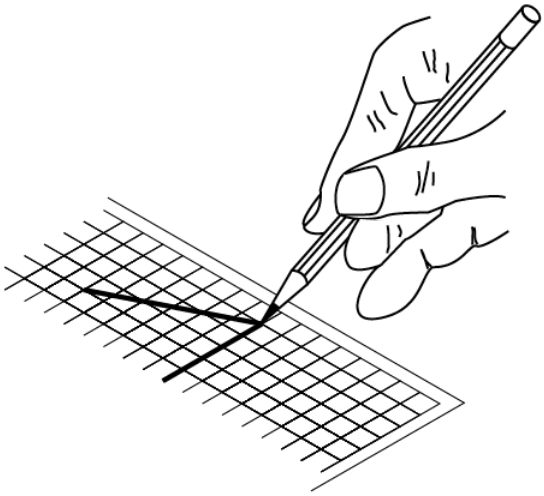

Figure 6.1.2: Sketching a horizontal line

Sketching a rectangle

Locate the corners of the rectangle first. Then place your paper in a comfortable position for sketching and sketch downward for vertical lines and left to right for horizontal lines. Use the grid lines as a guide to help maintain your parallel and at 90 degrees lines to each other (Figure 6.1.3).

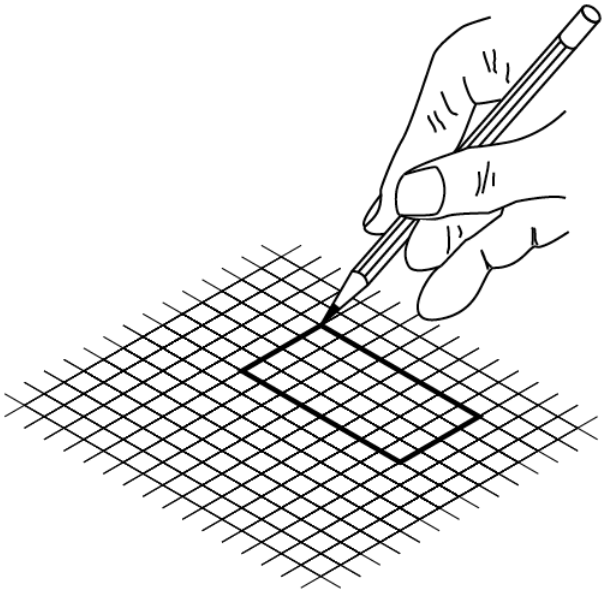

Figure 6.1.3: Sketching a rectangle

Sketching a circle

First, locate the center of the circle (Figure 6.1.4), and then very lightly box in the size of the circle (using the diameter as a guide), as in the top right. Sketch in the circle, one quarter at a time, as shown in the bottom row, left to right. You may find it necessary at first to add light points along the projected circumference to help guide you through each quarter. Remember to move your sketch pad to maintain a comfortable sketching position.

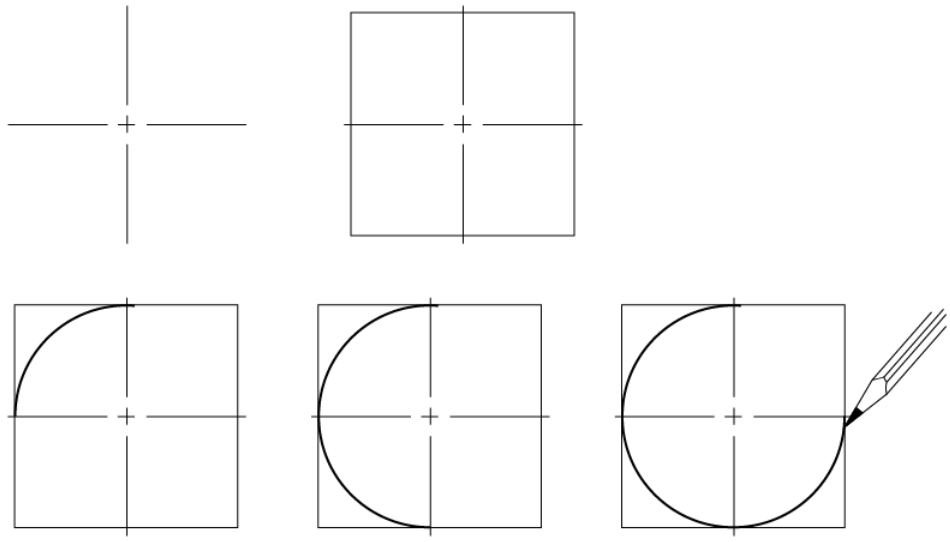

Figure 6.1.4: Sketching a circle

Sketching to approximate scale

The full-size square is on the left in Figure 6.1.5. The center square is half size, and the right square is quarter size. Note that the center and right squares are the same shape as the left square, only smaller.

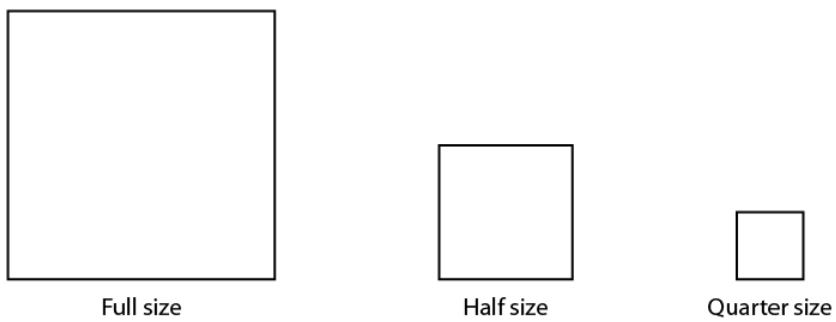

Figure 6.1.5: Sketching to scale

When sketching freehand, your sketches should reflect the actual shapes of objects as much as possible. If you use grid paper, sketching to an approximate scale is not difficult. Assume that the object in Figure 6.1.6 is shown full size. As it is necessary to show all orthographic views on the same sheet of paper, the views must be scaled. Figure 6.1.7 shows the views at approximately one-half the original size.

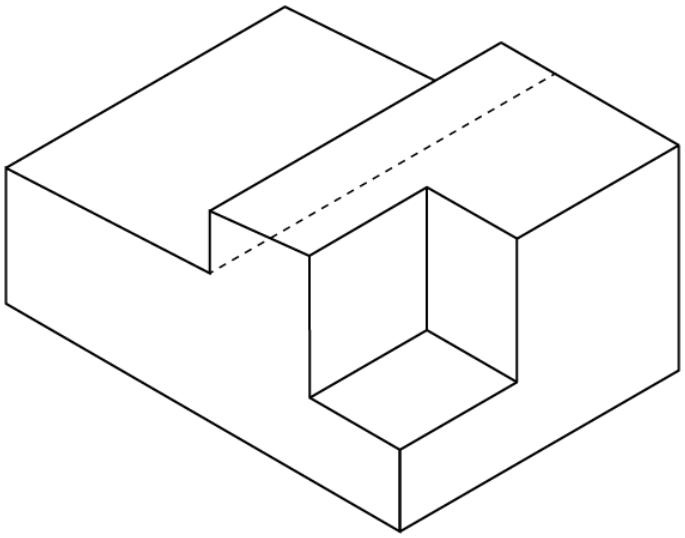

Figure 6.1.6: Full-size isometric object

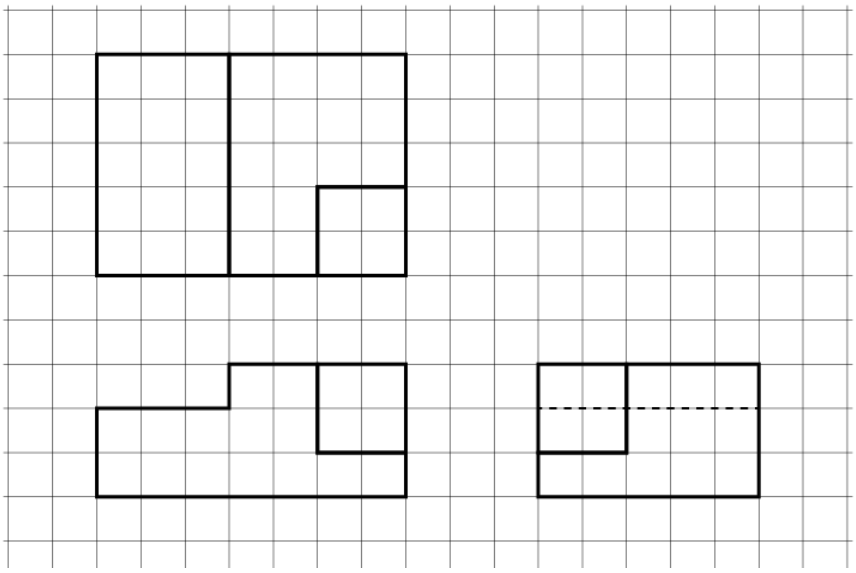

Figure 6.1.6: Scale orthographic projections

6.1: Creating Drawings and Sketches is shared under a CC BY license and was authored, remixed, and/or curated by LibreTexts.

6.2: Make isometric sketches of simple rectangular objects

Isometric sketches are helpful because they are easy to draw and clearly represent an object or system. This clarity comes from using directional lines to represent the three dimensions of length, width, and height, much like a picture.

Construction methods

The following steps explain how to draw an isometric cube. The three dimensions of length, width, and height are drawn along the isometric axes shown in Figure 6.2.1. The lengths of objects running parallel to these axes can be drawn to scale. Lines at other angles will not be to scale.

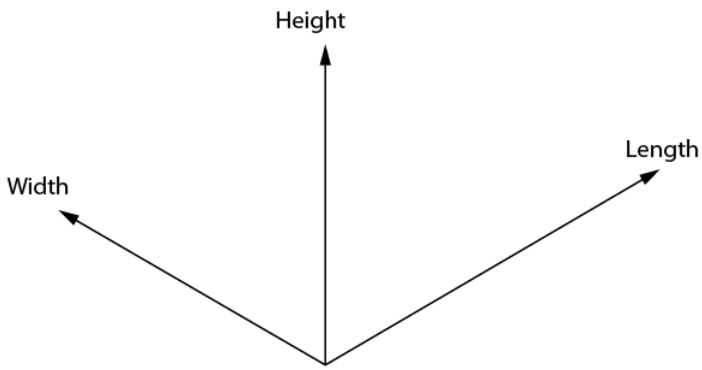

Figure 6.2.1: Isometric axes

Draw a small star-shaped axis on the bottom corner of your grid paper. The sloping axes should be drawn at a 30-degree angle from the horizontal grid line. The vertical axis of the star indicates height (H) or depth (D), and the two sloping axes indicate the length (L) and the width (W) of the rectangle. The vertical axis can be used as a guide when making lines on your drawing. Notice we have labeled the points on the star in Figure 6.2.2. When drawing a stationary object, these labels can change depending on your desired view. The bottom two horizontal points indicate the view that is being drawn. In this case, we would be creating a front-right view.

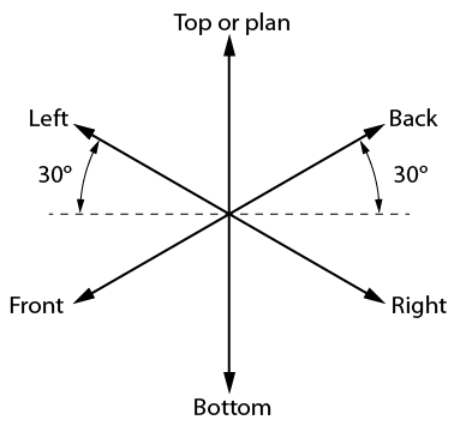

Figure 6.2.2: Step 1: Isometric guide for front-right view

Sketch the top of the block by drawing two lines, one parallel to L and one parallel to W (Figure 6.2.3).

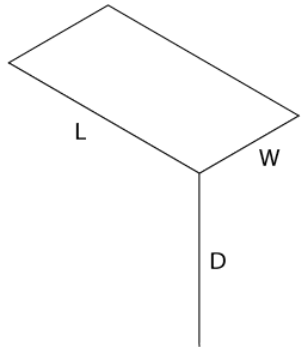

Figure 6.2.3: Step 2: Isometric view of the top surface of a rectangular block

Sketch two lines, one parallel to L and one parallel to D, as shown in Figure 6.2.4.

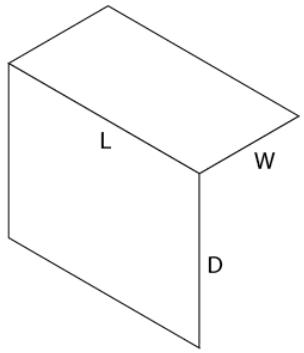

Figure 6.2.4: Step 3: Lines parallel to L and D

Sketch two lines, one parallel to W and one parallel to D, to complete the outline of the rectangular block as shown in Figure 6.2.5. Begin with light construction lines so that you can make any necessary adjustments before darkening them. Figure 6.2.6 shows the finished isometric sketch.

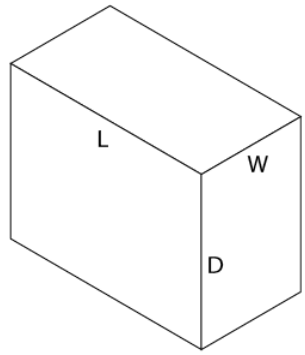

Figure 6.2.5: Step 4: Completed outline of rectangular block

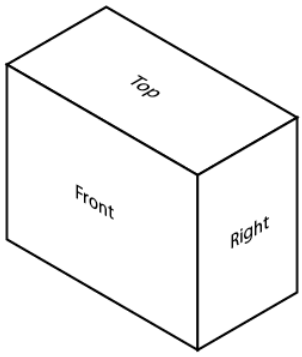

Figure 6.2.6: Completed isometric sketch

Sketching irregular shapes with isometric lines

Not all rectangular objects are as simple as the block you have just sketched. Sometimes the shapes are irregular and have cut-out sections, or some sides longer than others. All rectangular objects can be fitted into a box having the maximum length (L), width (W), and depth (D). Begin by sketching a light outline of a basic box that is the size of the object to be drawn.

Consider the object shown in the three-view orthographic sketch in Figure 6.2.7. To produce an isometric sketch of this object, you need to find the maximum L, W, and D for the containing box (Figure 6.2.7). In this case:

- L = 5 grid spaces
- W = 3 grid spaces
- D = 3 grid spaces

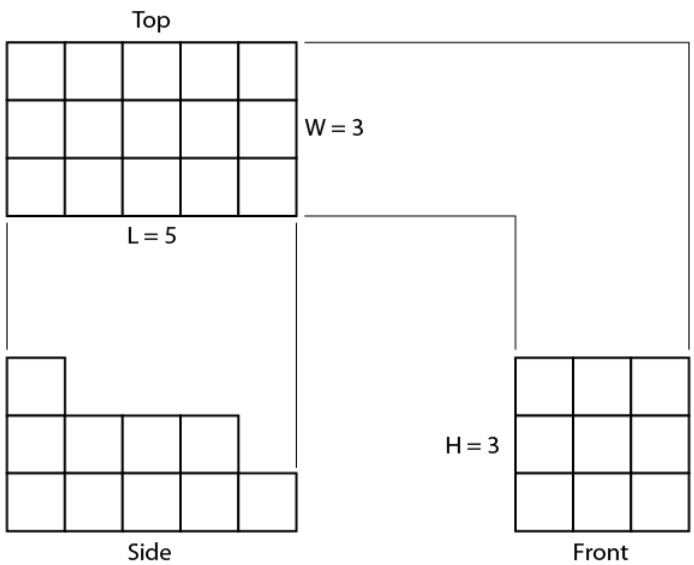

Figure 6.2.7: Orthographic views

Sketch a light outline of the basic rectangular box to the required size, as shown in Figure 6.2.8.

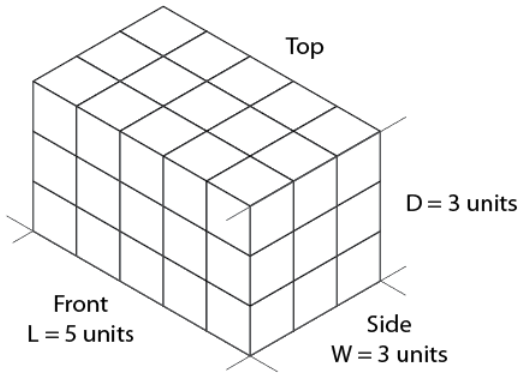

Figure 6.2.8: Basic outline

The front view shows the outline most clearly. Place this view on the front surface of the isometric box. Use the dimension given in the front view of Figure 6.2.7 and mark the number of units indicated along the axes L and D (Figure 6.2.9).

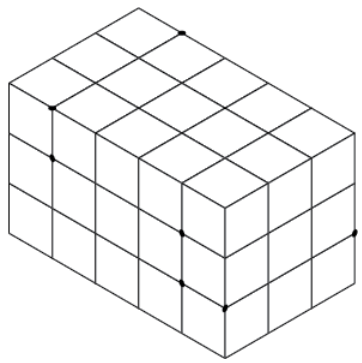

Figure 6.2.9: Location of marks on axes

Lightly sketch lines parallel to the L and D axes from the marked points on the front surface (Figure 6.2.10). Once you are sure your sketch is correct, the step outline is drawn more heavily to emphasize the object's profile.

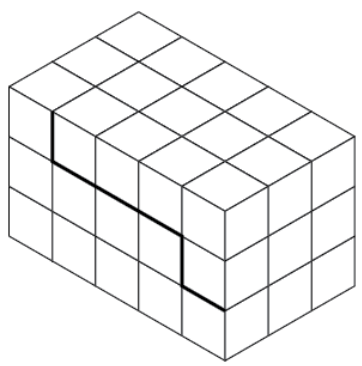

Figure 6.2.10: Location of main features

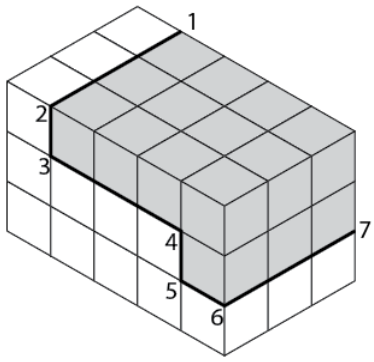

Figure 6.2.11: Location of outer surfaces

Sketch in a series of lines parallel to the axes (L, W, and D) from the corners numbered 1 to 7 (Figure 6.2.11). These lines establish the stepped outline as shown in Figure 6.2.12.

When you are sure your isometric sketch is correct, erase all unnecessary construction lines and darken the object lines. Your completed sketch of the rectangular object should be similar to that in Figure 6.2.13.

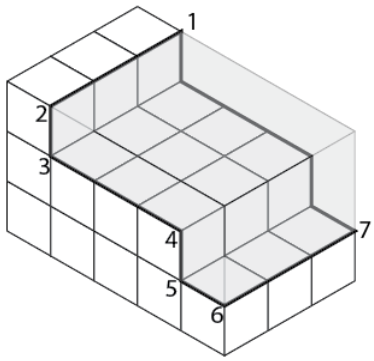

Figure 6.2.12: Internal features

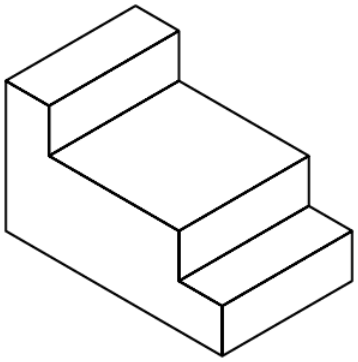

Figure 6.2.13: Completed sketch

6.2: Make isometric sketches of simple rectangular objects is shared under a CC BY license and was authored, remixed, and/or curated by LibreTexts.

6.3: Sketching Figures with Non-isometric Lines

Figure 6.3.1 shows an object that is basically rectangular but has one face machined at an angle. You can easily construct an isometric sketch of the basic rectangular block. To show the machined face, it is necessary to plot the appropriate points of intersection and join those points to produce the correct angle.

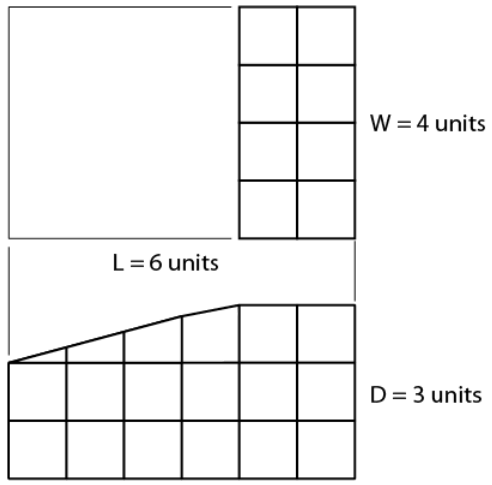

Figure 6.3.1: Rectangle with face machined at an angle

Sketch a light outline of the basic rectangular block using the size measurements given in Figure 6.3.1. Mark the number of units indicated along the length (L) and the depth (D), as shown in Figure 6.3.2.

Lightly sketch lines parallel to the original block outlines from the marked points on the front and side surfaces, as shown in Figure 6.3.3.

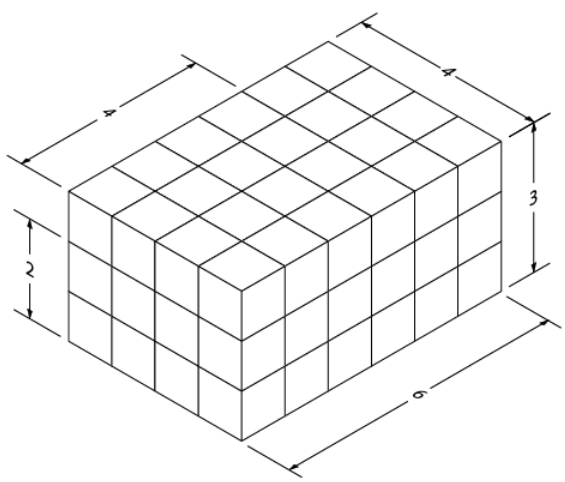

Figure 6.3.2: Rectangle with units marked along L and D

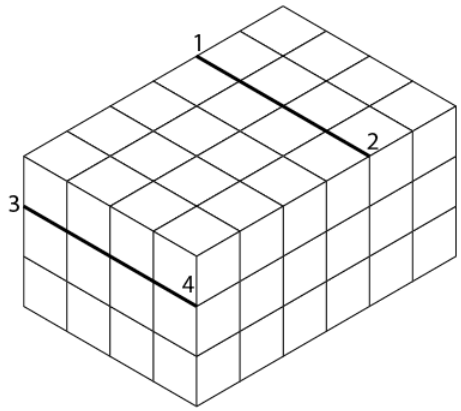

Figure 6.3.3: Lines sketched parallel to original block outline

Join the two points on the front face and the two ends of the lines you have just sketched across the object (Figure 6.3.4). Once you are sure your sketch is correct, erase the light lines that originally outlined the block and darken the outline of the completed block as shown in Figure 6.3.5.

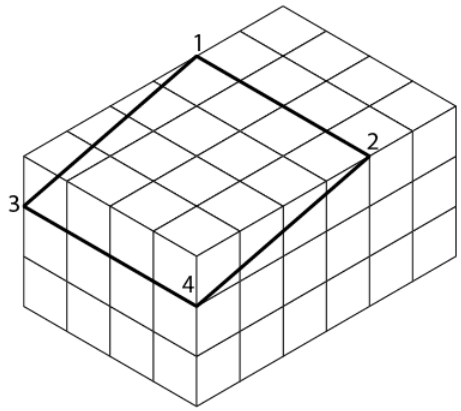

Figure 6.3.4: Front face

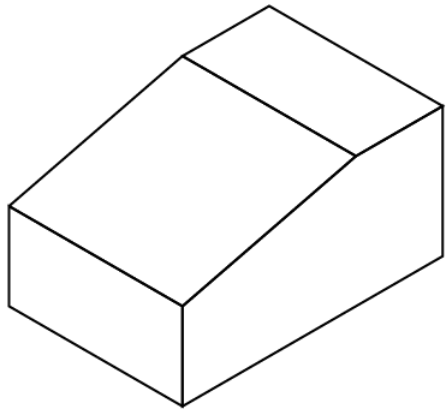

Figure 6.3.5: Completed block

6.3: Sketching Figures with Non-isometric Lines is shared under a CC BY license and was authored, remixed, and/or curated by LibreTexts.

CHAPTER OVERVIEW

7: Exercises

7.1: Practice 1: Make orthographic sketches
7.2: Practical 2: Make an orthographic three-view, fully dimensioned sketch of a simple object
7.3: Practice 3: Make Isometric Sketches
7.4: Answers

7: Exercises is shared under a CC BY license and was authored, remixed, and/or curated by LibreTexts.

7.1: Practice 1: Make orthographic sketches

Use sketching techniques to produce orthographic sketches of the following figures. For the purposes of these exercises, do not be concerned with dimensions. Concentrate on producing good, dark outlines, good circular shapes, and correctly drawn hidden and center lines.

1. Sketch one orthographic view of the object shown pictorially in Figure 7.1.1. Remember that the holes in the gasket are circular (not elliptical as they appear in the three-dimensional sketch shown). Add a title block with the following:

- Title: Gasket
- Sk. No.: D-1/031
- Sk. by: (your name)
- Date: (today's date)

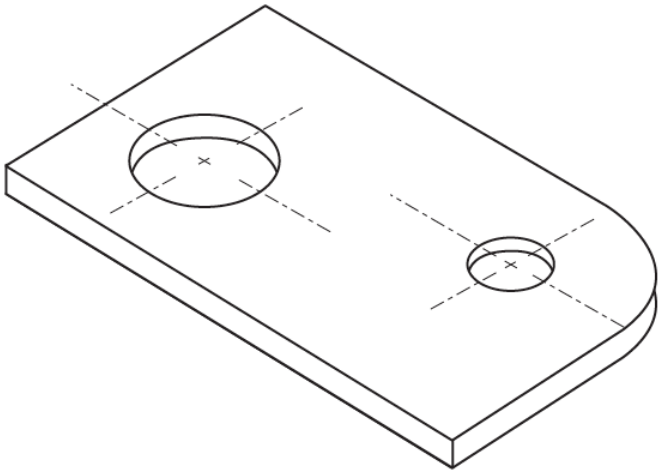

Figure 7.1.1: Gasket

2. Sketch two orthographic views (front view and top view), in the approximate scale of the object shown pictorially in Figure 7.1.2. Remember to place the views correctly and make sure that all hidden lines are clearly shown. Add a title block with the following:

- Title: Stop piece
- Sk. No.: D-1/032
- Sk. by: (your name)
- Date: (today's date)

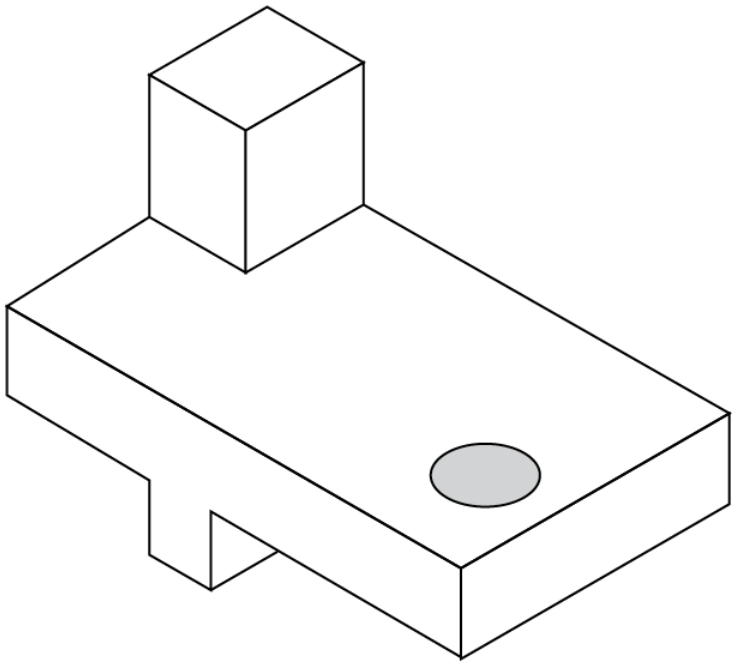

Figure 7.1.2: Stop piece

7.1: Practice 1: Make orthographic sketches is shared under a CC BY license and was authored, remixed, and/or curated by LibreTexts.

7.2: Practical 2: Make an orthographic three-view, fully dimensioned sketch of a simple object

Sketch the necessary views of the object in the pictorial drawing below and dimension fully. Sketch to approximate scale to suit your sheet size.

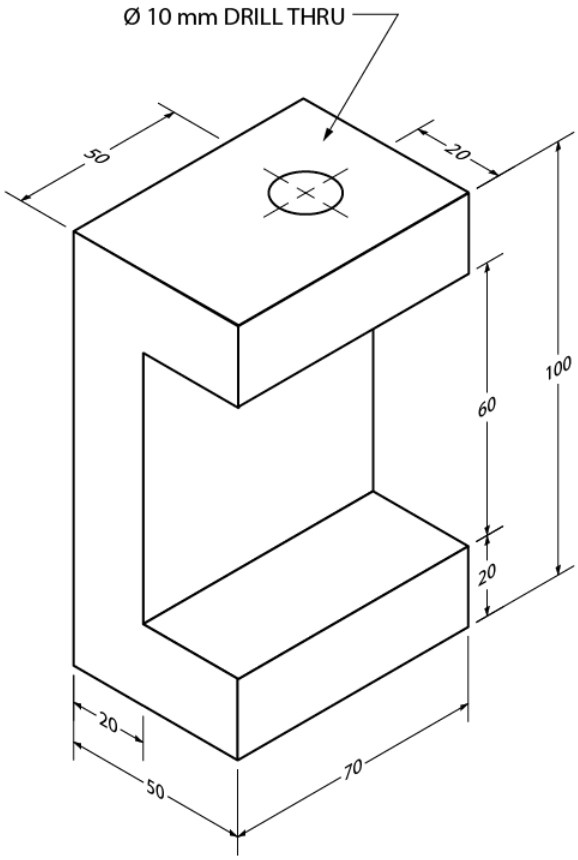

Add a title block with the following:

- Title: Clamp Bracket
- Sk. No.: D1/PC3
- Sk. by: (your name)
- Date: (today's date)

7.2: Practical 2: Make an orthographic three-view, fully dimensioned sketch of a simple object is shared under a CC BY license and was authored, remixed, and/or curated by LibreTexts.

7.3: Practice 3: Make Isometric Sketches

Given the orthographic sketches shown of the two objects in 1 and 2, make isometric sketches of each object to the same scale as the object shown. Borders and title blocks are not necessary for these sketches.

1.

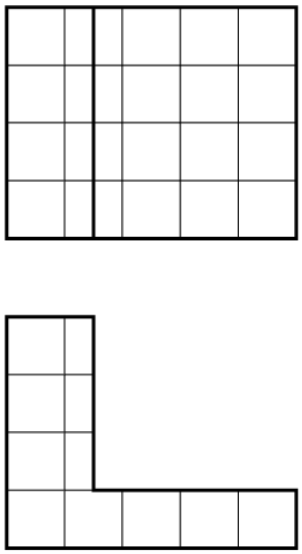

2.

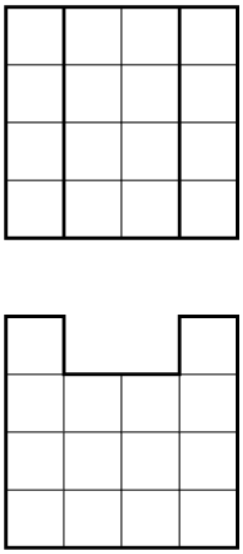

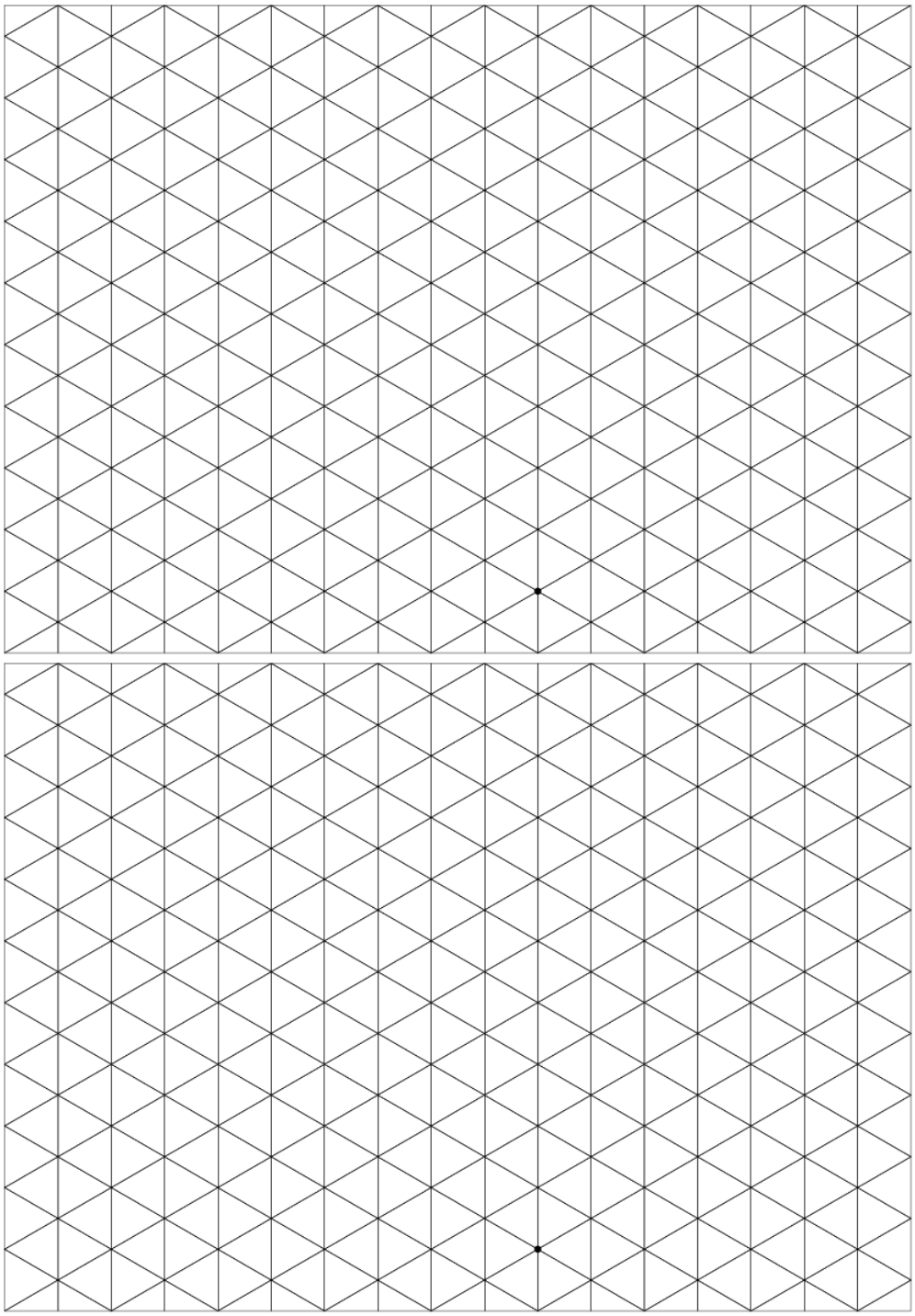

7.3: Practice 3: Make Isometric Sketches is shared under a CC BY license and was authored, remixed, and/or curated by LibreTexts.

7.4: Answers

Self-Test 1

1. a. Vinyl
2. a. True
3. d. Drawing horizontal lines
4. a. To help you prevent smudges
5. a. True
6. c. Drawing vertical and angled lines
7. b. False
8. b. Measuring angles
9. d. Perpendicular
10. c. Drawing arcs and circles
11. c. To erase in a desired area
12. a. True
13. c. Scribing arcs on metal
14. c. To create drawings at a reduced scale

Self-Test 2

1. c. Object line
2. a. Centre line
3. c. Hidden line
4. a. True
5. b. False
6. a. Leader line
7. d. With a phantom line
8. d. Internal features of a part
9. d. Direction of observation when the section is drawn
10. a. Size dimensions

Self-Test 3

1. a. True
2. b. Architect’s scale ruler
3. a. 1
4. d. Use the dimension written between the dimension lines.
5. b. 18'
6. d. 51'
7. d. 12'6"
8. a. 1'3"
9. a. 16'2"
10. a. 3'4"
11. b. 3.5 m
12. b. 1.9 m
13. a. 8'6"

Self-Test 4

1. b. Pictorial
2. b. 30°
3. d. Vanishing points

4. c. 30°–45°
5. b. False
6. a. Plan view
7. c. 3
8. A. 10

   B. 11

   C. 5

   D. 6

   E. 1

   F. 12

   G. 7

   H. 2

   I. 8

   J. 4

   K. 9

   L. 3
9. b. Floor plan
10. d. Elevation drawings

Self-Test 5

1. b. In the title block
2. a. True
3. d. In the bill of materials
4. a. True
5. d. All of the above

7.4: Answers is shared under a CC BY license and was authored, remixed, and/or curated by LibreTexts.

Index

Glossary

Sample Word 1 | Sample Definition 1

Detailed Licensing

Overview

Title: Fundamentals - Drawings and Specifications

Webpages: 47

All licenses found:

- CC BY 4.0: 83% (39 pages)
- Undeclared: 17% (8 pages)

By Page

- Fundamentals - Drawings and Specifications - *CC BY 4.0*
  - Front Matter - *CC BY 4.0*
    - TitlePage - *Undeclared*
    - InfoPage - *Undeclared*
    - Table of Contents - *Undeclared*
    - Licensing - *Undeclared*
    - Acknowledgments and Copyright - *CC BY 4.0*
    - Foreword - *CC BY 4.0*
    - Industry Training Authority of BC - *CC BY 4.0*
    - Symbols Legend - *CC BY 4.0*
  - 1: Describe the drafting tools and materials used in drawing plans - *CC BY 4.0*
    - 1.1: Tools - *CC BY 4.0*
    - 1.2: Drafting Materials - *CC BY 4.0*
    - 1.3: Computer drafting printing - *CC BY 4.0*
    - 1.E: Self Test 1 - *CC BY 4.0*
  - 2: Describe lines, lettering, and dimensioning in drawings - *CC BY 4.0*
    - 2.1: Line styles and types - *CC BY 4.0*
    - 2.2: Standard lettering - *CC BY 4.0*
    - 2.3 Abbreviations - *CC BY 4.0*
    - 2.4: Principles of Dimensioning - *CC BY 4.0*
    - 2.E: Self-Test 2 - *CC BY 4.0*
  - 3: Use scale rulers to determine actual dimensions from drawings - *CC BY 4.0*
    - 3.0: Prelude to Scales - *CC BY 4.0*
    - 3.2: Metric Scales - *CC BY 4.0*
    - 3.3: Obtain dimensions from drawings - *CC BY 4.0*
    - 3.E: Self Test 3 - *CC BY 4.0*
    - Untitled Page 19 - *CC BY 4.0*
  - 4: Describe drawing projections - *CC BY 4.0*
    - 4.1: Types of views used in drawings - *CC BY 4.0*
    - 4.E: Self Test 4 - *CC BY 4.0*
  - 5: Interpret mechanical drawings - *CC BY 4.0*
    - 5.1: Basic layout of a drawing - *CC BY 4.0*
    - 5.2: Specifications - *CC BY 4.0*
    - 5.E: Self-Test 5 - *CC BY 4.0*
  - 6: Creating drawings and sketches - *CC BY 4.0*
    - 6.1: Creating Drawings and Sketches - *CC BY 4.0*
    - 6.2: Make isometric sketches of simple rectangular objects - *CC BY 4.0*
    - 6.3: Sketching Figures with Non-isometric Lines - *CC BY 4.0*
  - 7: Exercises - *CC BY 4.0*
    - 7.1: Practice 1: Make orthographic sketches - *CC BY 4.0*
    - 7.2: Practical 2: Make an orthographic three-view, fully dimensioned sketch of a simple object - *CC BY 4.0*
    - 7.3: Practice 3: Make Isometric Sketches - *CC BY 4.0*
    - 7.4: Answers - *CC BY 4.0*
  - Back Matter - *Undeclared*
    - Index - *Undeclared*
    - Glossary - *Undeclared*
    - Detailed Licensing - *Undeclared*