INTRODUCTION TO ELECTRIC POWER SYSTEMS

James Kirtley
Massachusetts Institute of Technology

LibreTexts™

Massachusetts Institute of Technology

Introduction to Electric Power Systems

James Kirtley

This text is disseminated via the Open Education Resource (OER) LibreTexts Project (https://LibreTexts.org) and like the thousands of other texts available within this powerful platform, it is freely available for reading, printing, and "consuming."

The LibreTexts mission is to bring together students, faculty, and scholars in a collaborative effort to provide an accessible, and comprehensive platform that empowers our community to develop, curate, adapt, and adopt openly licensed resources and technologies; through these efforts we can reduce the financial burden born from traditional educational resource costs, ensuring education is more accessible for students and communities worldwide.

Most, but not all, pages in the library have licenses that may allow individuals to make changes, save, and print this book. Carefully consult the applicable license(s) before pursuing such effects. Instructors can adopt existing LibreTexts texts or Remix them to quickly build course-specific resources to meet the needs of their students. Unlike traditional textbooks, LibreTexts' web based origins allow powerful integration of advanced features and new technologies to support learning.

LibreTexts is the adaptable, user-friendly non-profit open education resource platform that educators trust for creating, customizing, and sharing accessible, interactive textbooks, adaptive homework, and ancillary materials. We collaborate with individuals and organizations to champion open education initiatives, support institutional publishing programs, drive curriculum development projects, and more.

The LibreTexts libraries are Powered by NICE CXone Expert and was supported by the Department of Education Open Textbook Pilot Project, the California Education Learning Lab, the UC Davis Office of the Provost, the UC Davis Library, the California State University Affordable Learning Solutions Program, and Merlot. This material is based upon work supported by the National Science Foundation under Grant No. 1246120, 1525057, and 1413739.

Any opinions, findings, and conclusions or recommendations expressed in this material are those of the author(s) and do not necessarily reflect the views of the National Science Foundation nor the US Department of Education.

Have questions or comments? For information about adoptions or adaptions contact info@LibreTexts.org or visit our main website at https://LibreTexts.org.

The LibreTexts name, logo, and book covers are trademarked by LibreTexts, Inc. (a 501(c)(3) not-for-profit organization) and protected against unauthorized use.

This text was compiled on 08/19/2026

TABLE OF CONTENTS

Licensing

1: Review of network theory

1.1: Network Primitives

1.2: Examples- Voltage and Current Dividers

1.3: Node Voltages and Reference

1.4: Serial and Parallel Combinations

1.5: Loop and Node Equations

1.6: Linearity and Superposition

1.7: Thevenin and Norton Equivalent Circuits

1.8: Two Port Networks

1.9: Inductive and Capacitive Circuit Elements

2: AC power flow in linear networks

2.1: Transmission Lines

2.2: Complex Exponential Notation

2.3: Sinusoidal Time Functions

2.4: Impedance

2.5: System Functions and Frequency Response

2.6: Phasors

2.7: Energy and Power

2.8: A Conservation Law

2.9: Power Flow Through An Impedance

2.10: Compensated Line

3: Polyphase Networks

3.1: Two Phases

3.2: Three Phase Systems

3.3: Line-Line Voltages

3.4: Transformers

3.5: Three-Phase Transformers

3.6: Polyphase Lines and Single-Phase Equivalents

3.7: Introduction To Per-Unit Systems

4: Introduction to symmetrical components

4.1: The Symmetrical Component Transformation

4.2: Sequence Impedances

4.3: Unbalanced Sources

4.4: Rotating Machines

4.5: Transformers

4.6: Unbalanced Faults

5: Introduction to Load Flow

5.1: Power Flow

5.2: Bus Admittance

5.3: Gauss–Seidel Iterative Technique

5.4: Example- Simple–Minded Program

5.5: Example

6: Magnetic circuit analog to electric circuits

6.1: Electric Circuits and Kirchoff's Laws

6.2: Magnetic Circuits

6.3: Faraday's Law and Inductance

7: Power electric motor drives

8: Electromagnetic forces and loss mechanisms

8.1: Energy Conversion Process-

8.2: Tying the MST and Poynting Approaches Together

8.3: Simple Description of a Linear Induction Motor

8.4: Surface Impedance of Uniform Conductors

8.5: Iron

8.6: Semi-Empirical Method of Handling Iron Loss

9: Synchronous machine and winding models

9.1: Relating Rating to Size

9.2: Winding Inductance Calculation

9.3: Physical Picture- Current Sheet Description

9.4: Continuous Approximation to Winding Patterns

9.5: Classical, Lumped-Parameter Synchronous Machine

9.6: Balanced Operation

9.7: Reconciliation of Models

9.8: Per-Unit Systems

9.9: Normal Operation

9.10: Salient Pole Machines- Two-Reaction Theory

10: Analytic design evaluation of induction machines

10.1: Induction Motor Transformer Model

10.2: Operation- Energy Balance

10.3: Squirrel Cage Machine Model

10.4: Solid Iron Rotor Bodies

10.5: Induction Motor Speed Control

11: DC (commutator) and permanent magnet machines

11.1: Introduction

11.2: Permanent Magnets in Electric Machines

11.3: Simple Permanent Magnet Machine Structures- Commutator Machines

12: Permanent magnet "Brushless DC" motors

12.1: Motor Morphologies

12.2: Zeroth Order Rating

12.3: Parameter Estimation

12.4: Current Rating and Resistance

12.5: Appendix 1- Air-Gap Winding Inductance

12.6: Appendix 2- Permanent Magnet Field Analysis

12.7: Layout

Index

Glossary

Detailed Licensing

This page titled Introduction to Electric Power Systems (Kirtley) is shared under a CC BY-NC-SA 4.0 license and was authored, remixed, and/or curated by James Kirtley via source content that was edited to the style and standards of the LibreTexts platform.

Licensing

A detailed breakdown of this resource's licensing can be found in ***Back Matter/Detailed Licensing***.

This page titled Licensing is shared under a license and was authored, remixed, and/or curated by LibreTexts.

1: REVIEW OF NETWORK THEORY

Introduction

This note is a review of some of the most salient points of electric network theory. In it we do not prove any of the assertions that are made. We deal only with passive, linear network elements.

1.1: Network Primitives

1.2: Examples- Voltage and Current Dividers

1.3: Node Voltages and Reference

1.4: Serial and Parallel Combinations

1.5: Loop and Node Equations

1.6: Linearity and Superposition

1.7: Thevenin and Norton Equivalent Circuits

1.8: Two Port Networks

1.9: Inductive and Capacitive Circuit Elements

This page titled 1: Review of network theory is shared under a CC BY-NC-SA 4.0 license and was authored, remixed, and/or curated by James Kirtley (MIT OpenCourseWare) via source content that was edited to the style and standards of the LibreTexts platform.

1.1: Network Primitives

Electric network theory deals with two primitive quantities, which we will refer to as:

1. Potential (or voltage), and
2. Current.

Current is the actual flow of charged carriers, while difference in potential is the force that causes that flow. As we will see, potential is a single- valued function that may be uniquely defined over the nodes of a network. Current, on the other hand, flows through the branches of the network. Figure 1 shows the basic notion of a branch, in which a voltage is defined across the branch and a current is defined to flow through the branch. A network is a collection of such elements, connected together by wires.

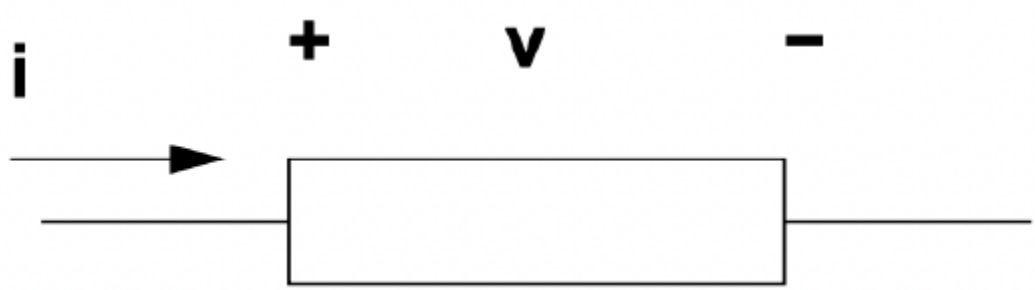

Figure 1: Basic Circuit Element

Network topology is the interconnection of its elements. That, plus the constraints on voltage and current imposed by the elements themselves, determines the performance of the network, described by the distribution of voltages and currents throughout the network.

Two important concepts must be described initially. These are of “loop” and “node”.

1. A loop in the network is any closed path through two or more elements of the network. Any non-trivial network will have at least one such loop.

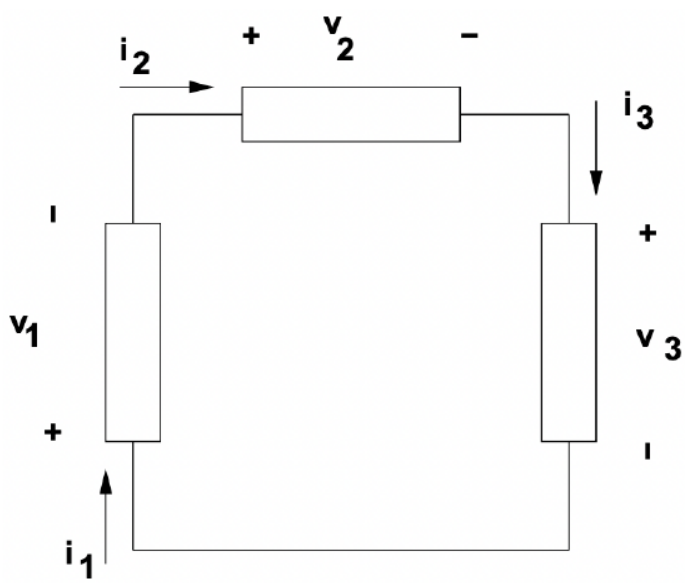

Figure 2: This is a loop

2. a node is a point at which two or more elements are interconnected.

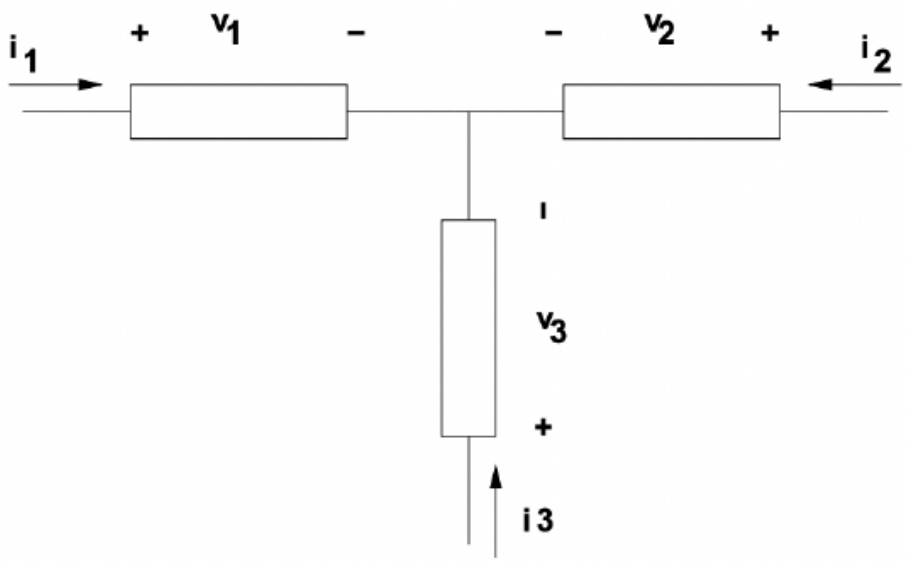

Figure 3: This is a node

The two fundamental laws of network theory are known as Kirchoff's Voltage Law (KVL), and Kirchoff's Current Law (KCL). These laws describe the topology of the network, and arise directly from the fundmantal laws of electromagnetics. They are simply stated as:

- $\sum_{loop} v_k = 0$
- $\sum_{node} i_k = 0$

1Note that KVL is a discrete version of Faraday's Law, valid to the extent that no time-varying flux links the loop. KCL is just conservation of current, allowing for no accumulation of charge at the node.

Network elements affect voltages and currents in one of three ways:

1. Voltage sources constrain the potential difference across their terminals to be of some fixed value (the value of the source).
2. Current sources constrain the current through the branch to be of some fixed value.
3. All other elements impose some sort of relationship, either linear or nonlinear, between voltage across and current through the branch.

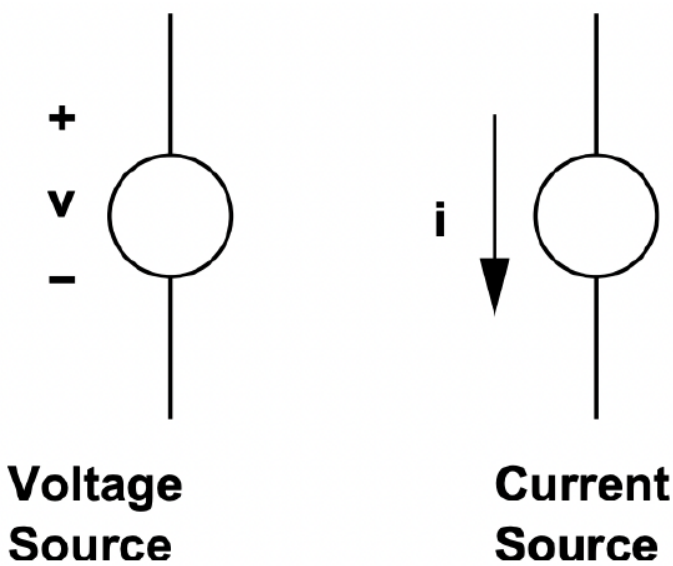

Figure 4: Notation for voltage and current sources

Voltage and current sources can be either independent or dependent. Independent sources have values which are, as the name implies, independent of other variables in a circuit. Dependent sources have values which depend on some other variable in a circuit. A common example of a dependent source is the equivalent current source used for modeling the collector junction in a transistor. Typically, this is modeled as a current dependent current source, in which collector current is taken to be directly dependent on emitter current. Such dependent sources must be handled with some care, for certain tricks we will be discussing below do not work with them.

For the present time, we will consider, in addition to voltage and current sources, only impedance elements, which impose a linear relationship between voltage and current. The most common of these is the resistance, which imposes the relationship which is often referred to as Ohm's law:

$$v_r = Ri_r$$

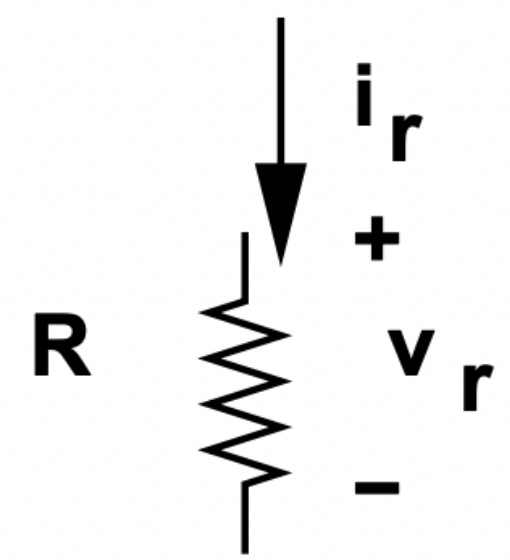

Figure 5: Resistance Circuit Element

A bit later on in this note, we will extend this notion of impedance to other elements, but for the moment the resistance will serve our purposes.

This page titled 1.1: Network Primitives is shared under a CC BY-NC-SA 4.0 license and was authored, remixed, and/or curated by James Kirtley (MIT OpenCourseWare) via source content that was edited to the style and standards of the LibreTexts platform.

1.2: Examples- Voltage and Current Dividers

Figure 6 may be used as an example to show how we use all of this. See that it has one loop and three nodes. Around the loop, KVL is:

$$V_s - v_1 - v_2 = 0$$

At the upper right- hand node, we have, by KCL:

$$i_1 - i_2 = 0$$

The constitutive relations imposed by the resistances are:

$$v_1 = R_1 i_1$$
$$v_2 = R_2 i_2$$

Combining these, we find that:

$$V_s = (R_1 + R_2)\, i_1$$

We may solve for the voltage across, say, R_2, to obtain the so-called voltage divider relationship:

$$v_2 = V_s \frac{R_2}{R_1 + R_2}$$

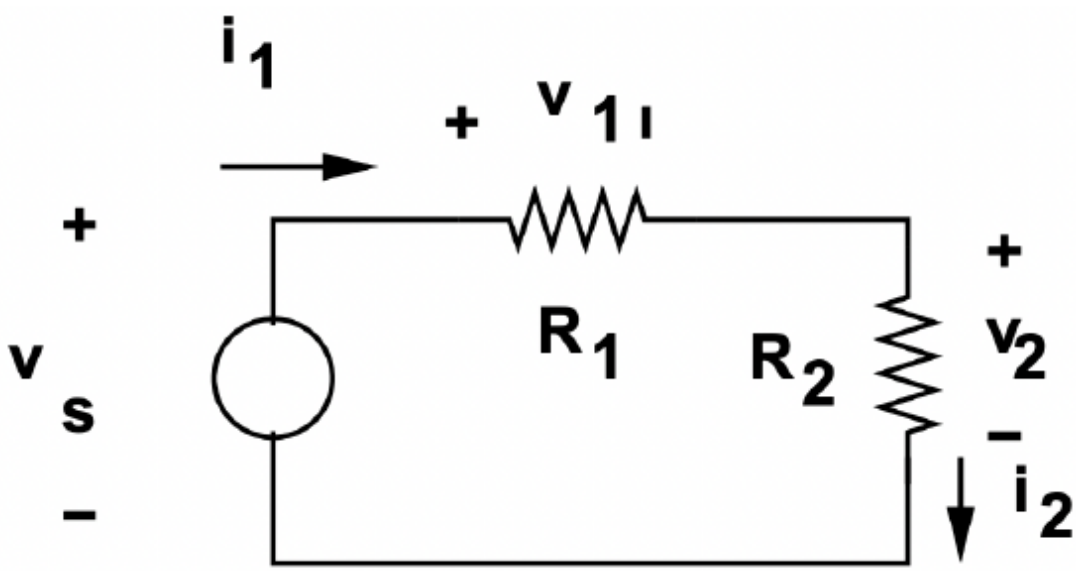

Figure 6: Voltage Divider

A second example is illustrated by Figure 7. Here, KCL at the top node yields:

$$I_s - i_1 - i_2 = 0$$

And KVL, written around the loop that has the two resistances, is:

$$R_1 i_1 - R_2 i_2 = 0$$

Combining these together, we have the current divider relationship:

$$i_2 = I_s \frac{R_1}{R_1 + R_2} \tag{1.2.1}$$

Once we have derived the voltage and current divider relationships, we can use them as part of our “intellectual toolkit”, because they will always be true.

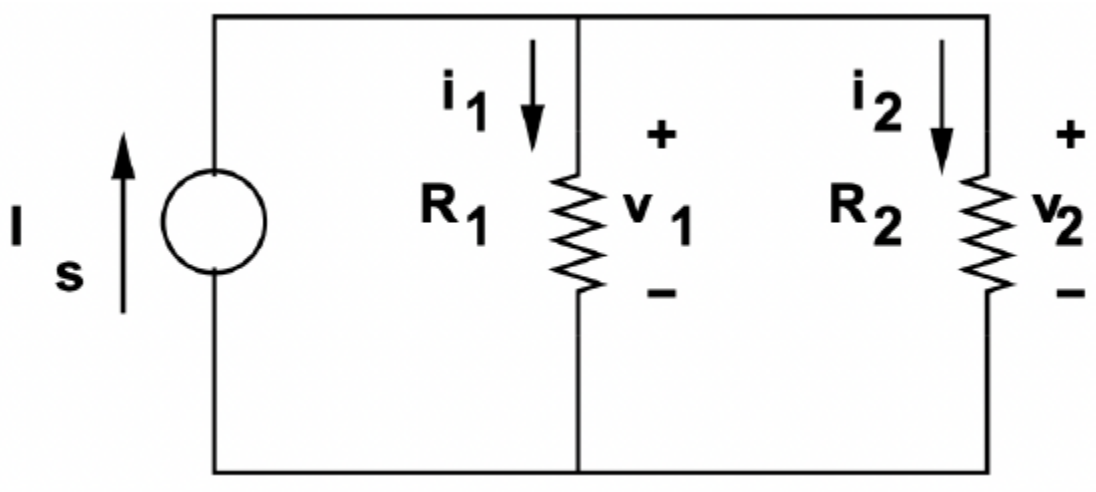

Figure 7: Current Divider

This page titled 1.2: Examples- Voltage and Current Dividers is shared under a CC BY-NC-SA 4.0 license and was authored, remixed, and/or curated by James Kirtley (MIT OpenCourseWare) via source content that was edited to the style and standards of the LibreTexts platform.

1.3: Node Voltages and Reference

One of the consequences of KVL is that every node in a network will have a potential which is uniquely specified with respect to some other node. Thus, if we take one of the nodes in the network to be a reference, or datum, each of the other nodes will have a unique potential. The voltage across any network branch is then the difference between the potentials at the nodes to which the element is connected. The potential of a node is the sum of voltages encountered when traversing some path between that node and the datum node. Note that any path will do. If KVL is satisfied, all paths between each pair of nodes will yield the same potential.

A commonly used electric circuit is the Wheatstone Bridge, shown in its simplest form in Figure 8. The output voltage is found simply from the input voltage as just the difference between two voltage dividers:

$$v_o = v_s \left(\frac{R_2}{R_1+R_2} - \frac{R_4}{R_3+R_4} \right)$$

This circuit is used in situations in which one or more resistors varies with, say temperature or mechanical strain. The bridge can be balanced so that the output voltage is zero by adjusting one of the other resistors. Then relatively small variations in the sensing element can result in relatively big differences in the output voltage. If, for example R_2 is the sensing element, R_4 can be adjusted to balance the bridge.

This page titled 1.3: Node Voltages and Reference is shared under a CC BY-NC-SA 4.0 license and was authored, remixed, and/or curated by James Kirtley (MIT OpenCourseWare) via source content that was edited to the style and standards of the LibreTexts platform.

1.4: Serial and Parallel Combinations

There are a number of techniques for handling network problems, and we will not be able to investigate each of them in depth. We will, however, look into a few techniques for analysis which involve progressive simplification of the network. To start, we consider how one might handle series and parallel combinations of elements. A pair of elements is in series if the same current flows through both of them. If these elements are resistors and if the detail of voltage division between them is not required, it is possible to lump the two together as a single resistance. This is illustrated in Figure 9. The voltage across the current source is:

$$v_s = v_1 + v_2 = i_s R_1 + i_s R_2 = i_s \left(R_1 + R_2\right)$$

The equivalent resistance for the series combination is then:

$$R_{\text{series}} = R_1 + R_2 \tag{1.4.1}$$

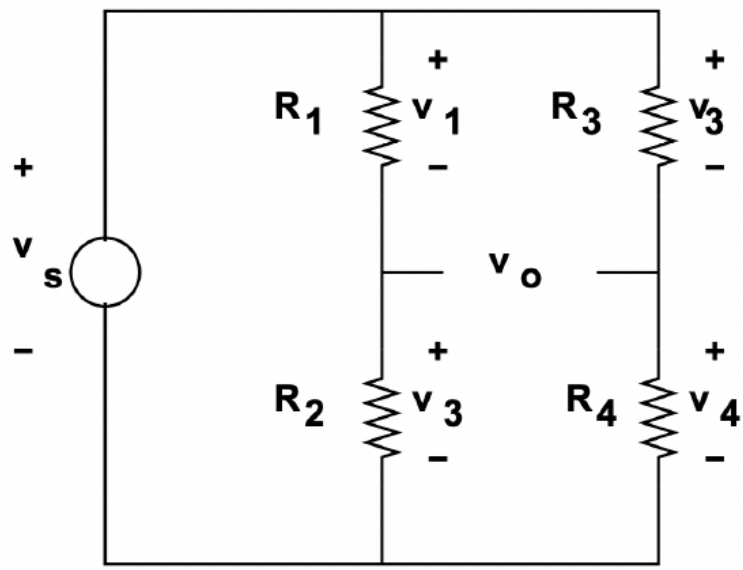

Figure 8: Wheatstone Bridge

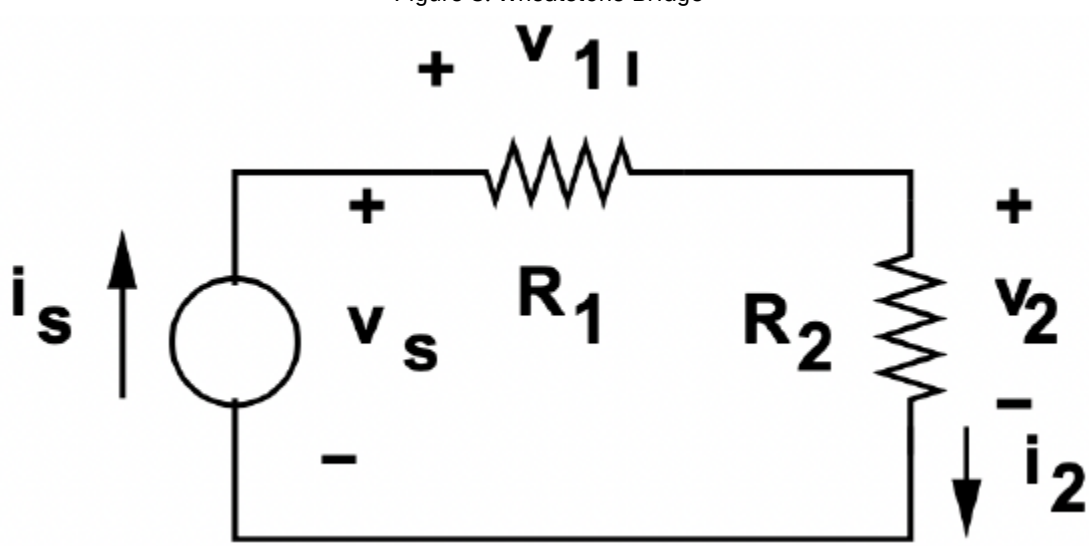

Figure 9: Series Resistance Combination

Similarly, resistance elements connected in parallel can be lumped if it is not necessary to know the details of division of current between them. Figure 10 shows this combination.

Here, current i is simply:

$$i = \frac{v}{R_1} + \frac{v}{R_2} = v\left(\frac{1}{R_1} + \frac{1}{R_2}\right)$$

The equivalent resistance for the parallel combination is then:

$$R_{par} = \frac{1}{\frac{1}{R_1} + \frac{1}{R_2}} = \frac{R_1 R_2}{R_1 + R_2} \tag{1.4.2}$$

Because of the importance of parallel connection of resistances (and of other impedances), a special symbolic form is used for parallel construction. This is:

$$R_1 \| R_2 = \frac{R_1 R_2}{R_1 + R_2} \tag{1.4.3}$$

As an example, consider the circuit shown in Figure 11, part (a). Here, we have four, resistors arranged in an odd way to form a two- terminal network. To find the equivalent resistance of this thing, we can do a series of series-parallel combinations.

The two resistors on the right can be combined as a series combination to form a single, two ohm resistor as shown in part (b). Then the equivalent resistor, which is in parallel with one of the two ohm resistors can be combined to form a single combination part(c). That is in series with the remaining resistor, leaving us with an equivalent input resistance of R = 3Ω.

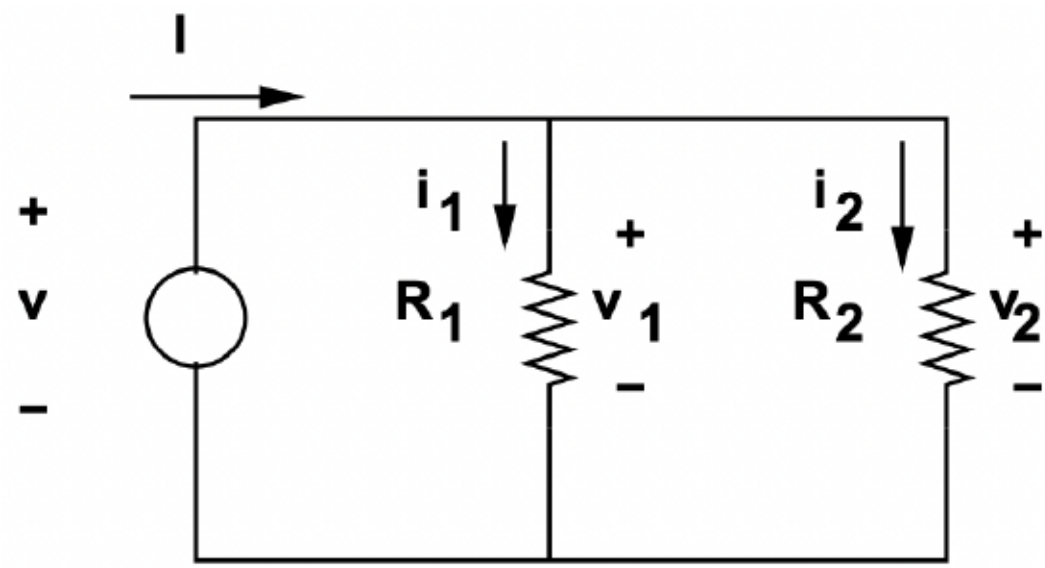

Figure 10: Parallel Resistance Combination

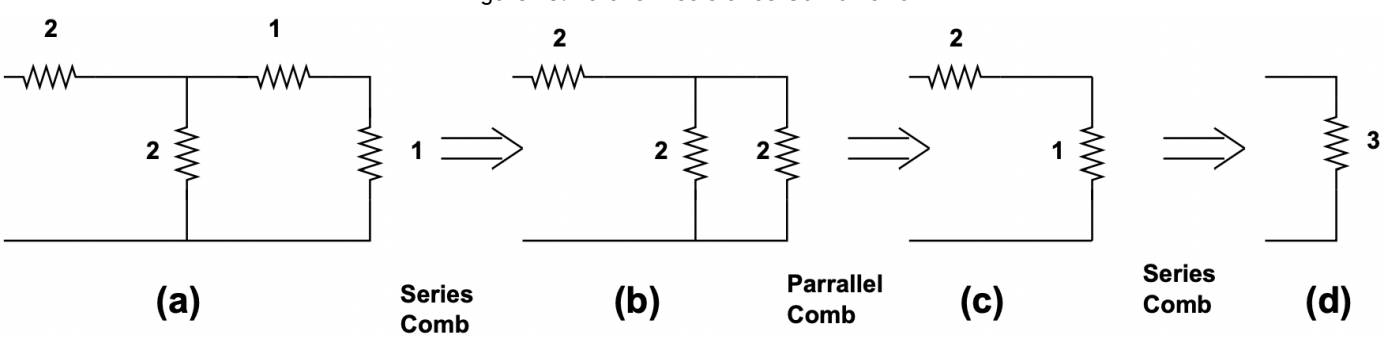

Figure 11: Series-Parallel Reduction

This page titled 1.4: Serial and Parallel Combinations is shared under a CC BY-NC-SA 4.0 license and was authored, remixed, and/or curated by James Kirtley (MIT OpenCourseWare) via source content that was edited to the style and standards of the LibreTexts platform.

1.5: Loop and Node Equations

There are two well- developed formal ways of solving for the potentials and currents in networks, often referred to as loop and node equation methods. They are closely related, using KCL and KVL together with element constraints to build sets of equations which may then be solved for potentials and currents.

- In the node equation method, KCL is written at each node of the network, with currents expressed in terms of the node potentials. KVL is satisfied because the node potentials are unique.
- In the loop equation method, KVL is written about a collection of closed paths in the network. “Loop currents” are defined, and made to satisfy KCL, and the branch voltages are expressed in terms of them.

The two methods are equivalent and a choice between them is usually a matter of personal preference. The node equation method is probably more widely used, and lends itself well to computer analysis.

To illustrate how these methods work, consider the network of Figure 12.

This network has three nodes. We are going to write KCL for each of the nodes, but note that only two explicit equations are required. If KCL is satisfied at two of the nodes, it is automatically satisfied at the third. Usually the datum node is the one for which we do not write the expression.

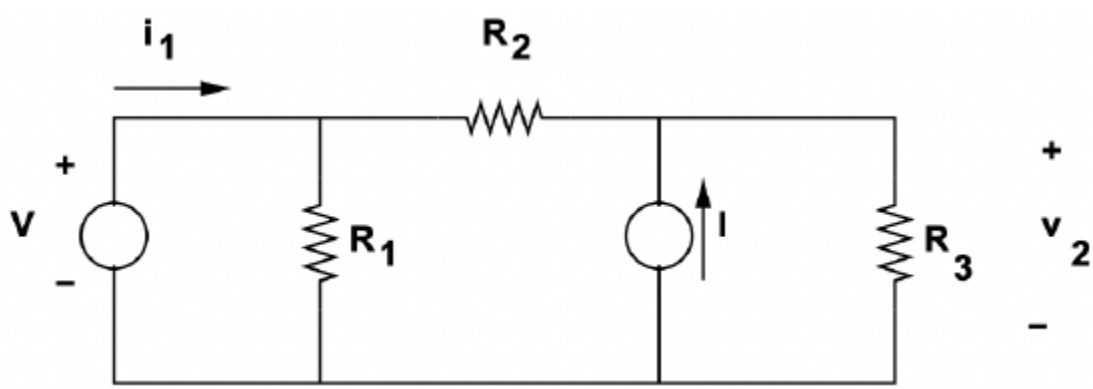

Figure 12: Sample Network

KCL written for the two upper nodes of the network is:

$$-i_1 + \frac{V}{R_1} + \frac{V - v_2}{R_2} = 0 \tag{1.5.1}$$

$$-I + \frac{v_2 - V}{R_2} + \frac{v_2}{R_3} = 0 \tag{1.5.2}$$

These two expressions are easily solved for the two unknowns, i_1 and v_2:

$$v_2 = \frac{R_3}{R_2+R_3}V + \frac{R_2R_3}{R_2+R_3}I$$
$$i_1 = \frac{R_1+R_2+R_3}{R_1(R_2+R_3)}V - \frac{R_3}{R_2+R_3}I$$

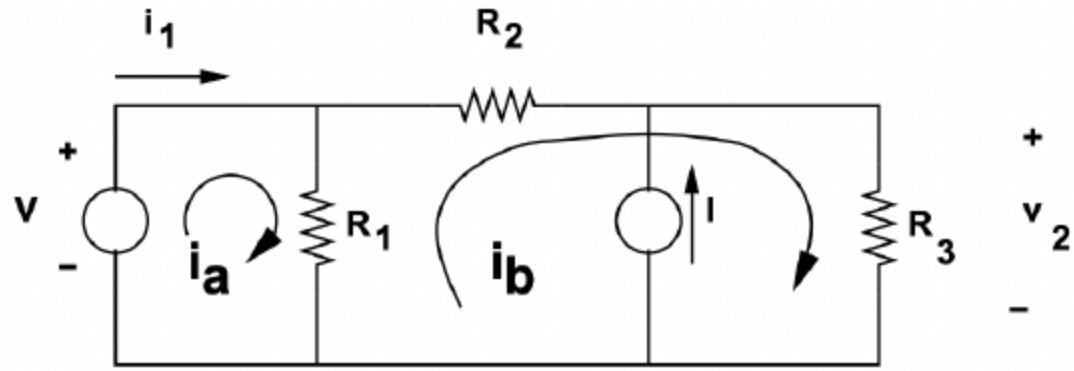

Figure 13: Sample Network Showing Loops

The loop equation method is similar. We need the same number of independent expressions (two), so we need to take two independent loops. For this, take as the loops as is shown in Figure 13:

1. The loop that includes the voltage source and R_1.
2. The loop that includes R_1, R_2, and R_3.

It is also necessary to define loop currents, which we will denote as i_a and i_b. These are the currents circulating around the two loops. Note that where the loops intersect, the actual branch current will be the sum of or difference between loop currents. For this example, assume the loop currents are defined to be circulating counter-clockwise in the two loops. The two loop equations are:

$$V + R_1 (i_a - i_b) = 0 \tag{1.5.3}$$

$$R_1 (i_b - i_a) + R_2 i_b + R_3 (i_b - I) = 0 \tag{1.5.4}$$

These are equally easily solved for the two unknowns, in this case the two loop currents i_a and i_b.

This page titled 1.5: Loop and Node Equations is shared under a CC BY-NC-SA 4.0 license and was authored, remixed, and/or curated by James Kirtley (MIT OpenCourseWare) via source content that was edited to the style and standards of the LibreTexts platform.

1.6: Linearity and Superposition

An extraordinarily powerful notion of network theory is linearity. This property has two essential elements, stated as follows:

1. For any single input x yielding output y, the response to an input kx is ky for any value of k.
2. If, in a multi-input network the input x_1 by itself yields output y_1 and a second input x_2 by itself yields y_2, then the combination of inputs x_1 and x_2 yields the output $y = y_1 + y_2$.

This is important to us at the present moment for two reasons:

1. It tells us that the solution to certain problems involving networks with multiple inputs is actually easier than we might expect: if a network is linear, we may solve for the output with each separate input, then add the outputs. This is called superposition.
2. It also tells us that, for networks that are linear, it is not necessary to actually consider the value of the inputs in calculating response. What is important is a system function, or a ratio of output to input.

Superposition is an important principle when dealing with linear networks, and can be used to make analysis easier. If a network has multiple independent sources, it is possible to find the response to each source separately, then add up all of the responses to find total response. Note that this can only be done with independent sources!

Consider, for example, the example circuit shown in Figure 12. If we are only interested in the output voltage v_2, we may find the response to the voltage source first, then the response to the current source, then the total response is the sum of the two. To find the response to the voltage source, we must "turn off" the current source. This is done by assuming that it is not there. (After all, a current source with zero current is just an open circuit!). The resulting network is as in Figure 14.

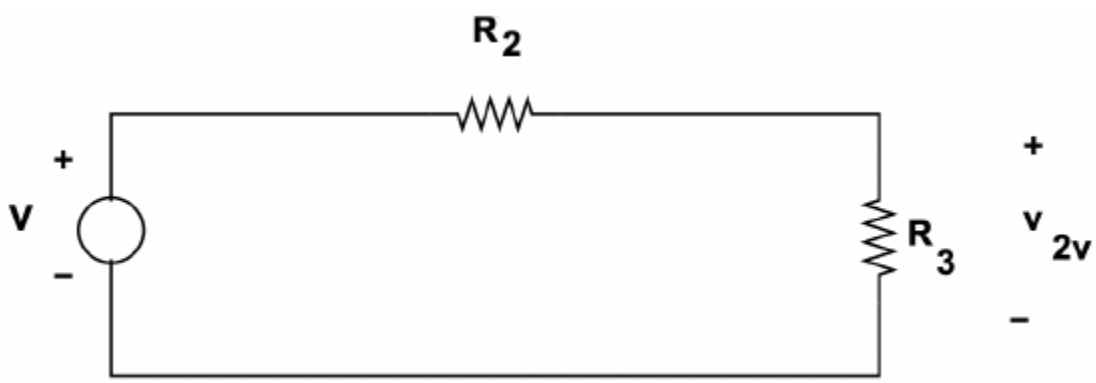

Figure 14: Superposition Fragment: Voltage Source

Note that the resistance R_1 does not appear here. This is because a resistance in parallel with a voltage source is just a voltage source, unless one is interested in current in the resistance. The output voltage is just:

$$v_{2v} = V \frac{R_3}{R_2 + R_3}$$

Next, we "turn off" the voltage source and "turn on" the current source. Note that a voltage source that has been turned off is a short circuit, because that implies zero voltage. The network is as shown in Figure 15

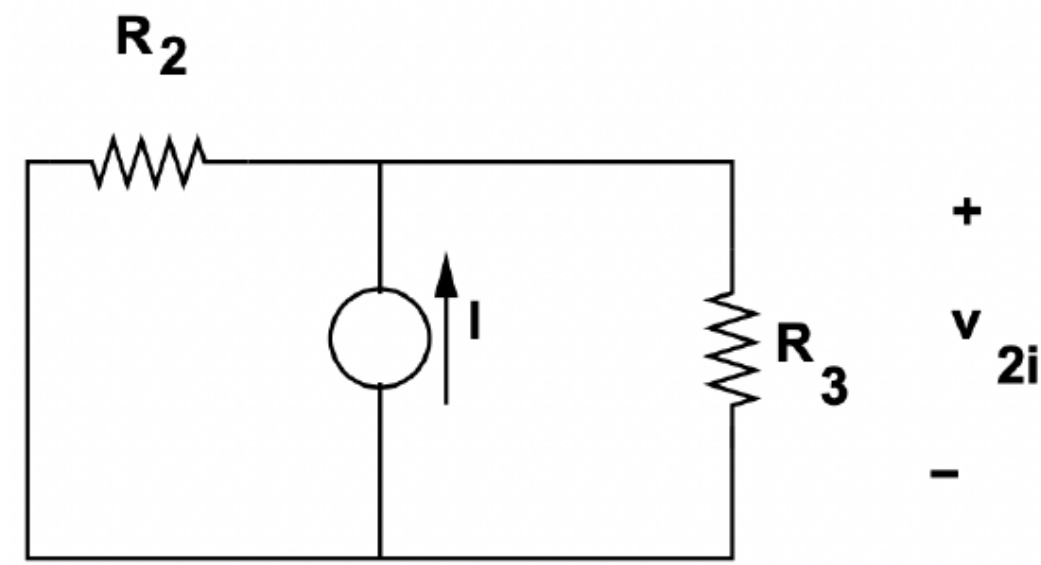

Figure 15: Superposition Fragment: Current Source

The response to this is:

$$v_{2i} = IR_2 \| R_3$$

The total response is then just:

$$v_2 = v_{2v} + v_{2i} = V\frac{R_3}{R_2+R_3} + I\frac{R_2R_3}{R_2+R_3}$$

This page titled 1.6: Linearity and Superposition is shared under a CC BY-NC-SA 4.0 license and was authored, remixed, and/or curated by James Kirtley (MIT OpenCourseWare) via source content that was edited to the style and standards of the LibreTexts platform.

1.7: Thevenin and Norton Equivalent Circuits

A particularly important ramification of the property of linearity is expressed in the notion of equivalent circuits. To wit: if we are considering the response of a network at any given terminal pair, that is a pair of nodes that have been brought out to the outside world, it follows from the properties of linearity that, if the network is linear, the output at a single terminal pair (either voltage or current) is the sum of two components:

1. The response that would exist if the excitation at the terminal pair were zero and
2. The response forced at the terminal pair by the exciting voltage or current.

This notion may be expressed with either voltage or current as the response. These yield the Thevenin and Norton equivalent networks, which are exactly equivalent. At any terminal pair, the properties of a linear network may be expressed in terms of either Thevenin or Norton equivalents. The Thevenin equivalent circuit is shown in Figure 16, while the Norton equivalent circuit is shown in Figure 17.

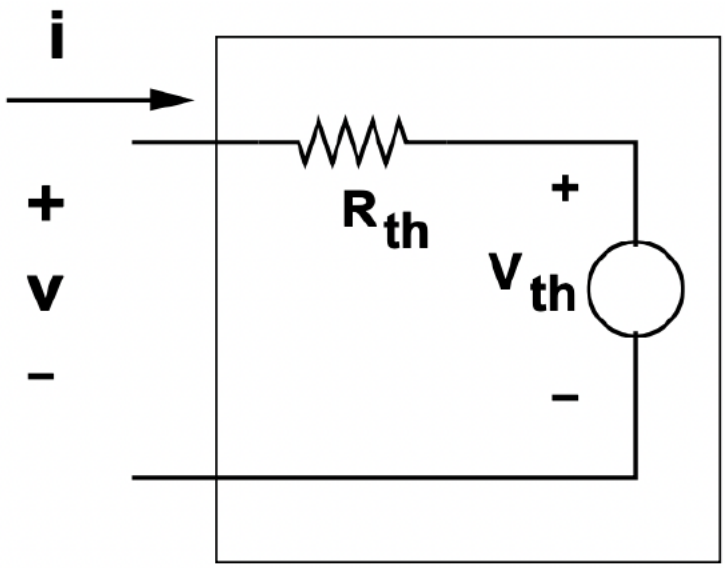

Figure 16: Thevenin Equivalent Network

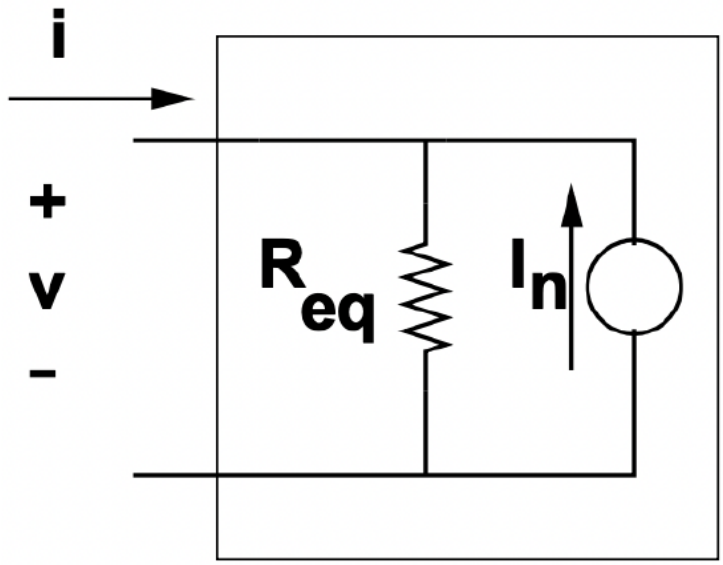

Figure 17: Norton Equivalent Network

The Thevenin and Norton equivalent networks have the same impedance. Further, the equivalent sources are related by the simple relationship:

$$V_{Th} = R_{eq} I_N \tag{1.7.1}$$

The Thevenin Equivalent Voltage, the source internal to the Thevenin equivalent network, is the same as the open circuit voltage, which is the voltage that would appear at the terminals of the equivalent circuit were it to be open circuited. Similarly, the Norton Equivalent Current is the same as minus the short circuit current.

To consider how we might use these equivalent networks, consider what would happen if the Wheatstone bridge were connected by some resistance across its output, as shown in Figure 18

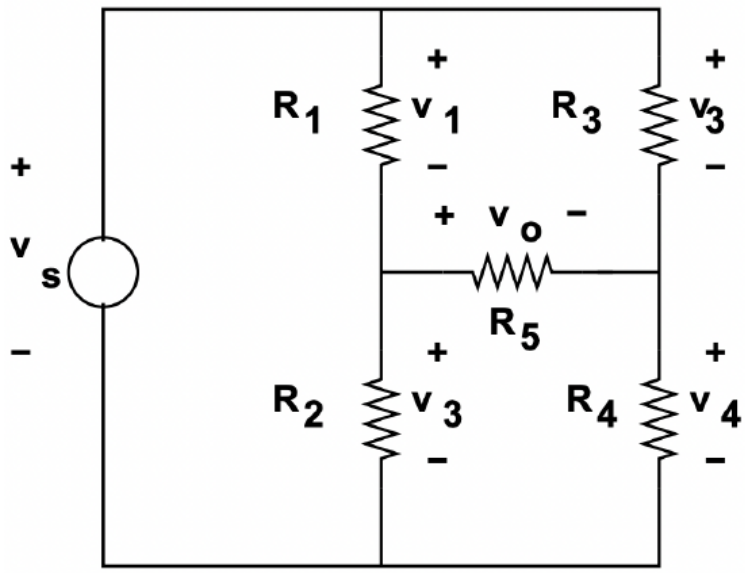

Figure 18: Wheatstone Bridge With Output Resistance

The analysis of this situation is simplified substantially if one recognizes that each side of the bridge can be expressed as either a Thevenin or Norton equivalent network. We may proceed to solve the problem by finding the equivalent networks for each side, then paste them together to form the whole solution. So: consider the equivalent network for the left-hand side of the network, formed by the elements V, R_1 and R_2. This is shown in Figure 19.

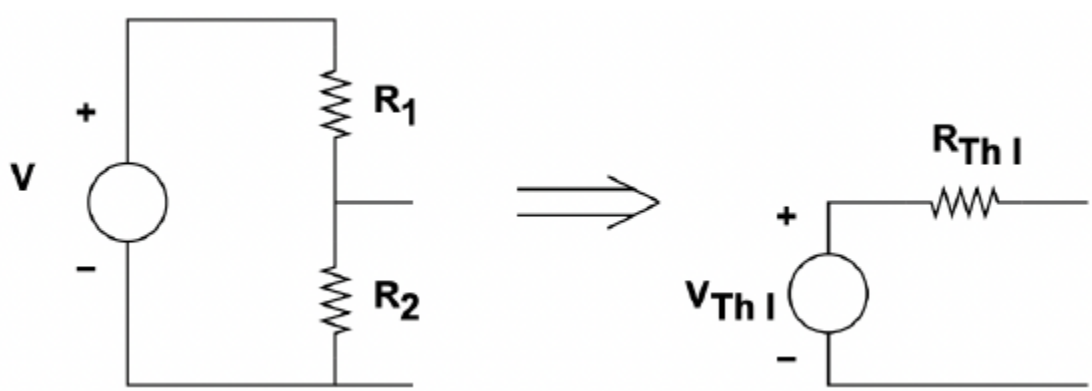

Figure 19: Construction of Equivalent Circuit

Where, here, the components of the equivalent circuit are:

$$v_{Thl} = V \frac{R_2}{R_1 + R_2}$$
$$R_{eql} = R_1 \| R_2$$

Similarly, the right side of the network is found to have an equivalent source and resistance:

$$v_{Thr} = V\frac{R_4}{R_3 + R_4}$$
$$R_{eqr} = R_3 \| R_4$$

And the whole thing behaves as the equivalent circuit shown in Figure 20

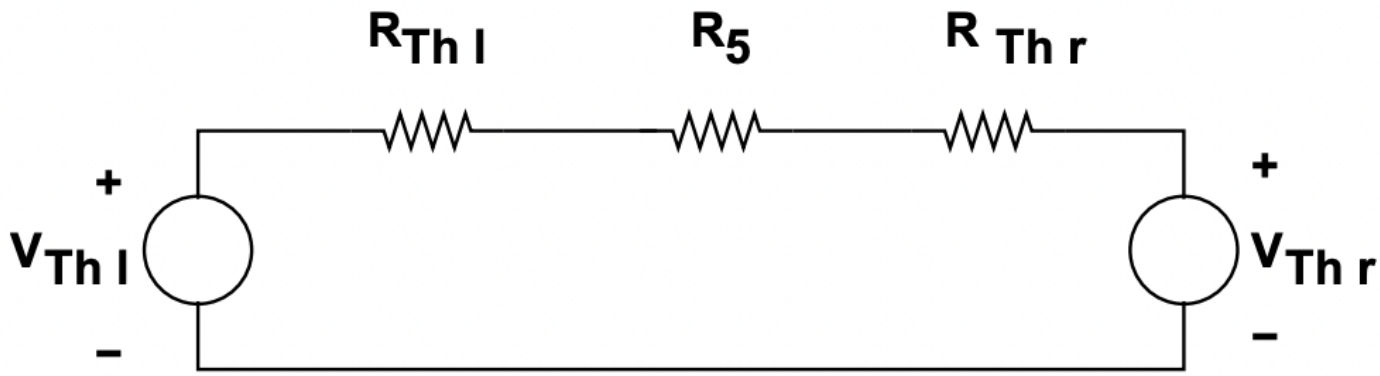

Figure 20: Equivalent Circuit

This is, of course, easily solved for the current through, and hence the voltage across, the resistance R_5, which was desired in the first place:

$$v_5 = (v_{Thl} - v_{Thr})\frac{R_5}{R_5 + r_{eql} + r_{eqr}} = V\left(\frac{R_2}{R_1 + R_2} - fracR_4R_3 + R_4\right)\frac{R_5}{R_5 + R_1 || R_2 + R_3 \| R_4}$$

This page titled 1.7: Thevenin and Norton Equivalent Circuits is shared under a CC BY-NC-SA 4.0 license and was authored, remixed, and/or curated by James Kirtley (MIT OpenCourseWare) via source content that was edited to the style and standards of the LibreTexts platform.

1.8: Two Port Networks

So far, we have dealt with a number of networks which may be said to be one port or single-terminalpair circuits. That is, the important action occurs at a single terminal pair, and is characterized by an impedance and by either a open circuit voltage or a short circuit current, thus forming either a Thevenin or Norton equivalent circuit. A second, and for us very important, class of electrical network has two (or sometimes more) terminal pairs. We will consider formally here the two port network, illustrated schematically in Figure 21.

There are a number of ways of characterizing this type of network. For the time being, consider that it is passive, so that there is no output without some input and there are no dependent sources.

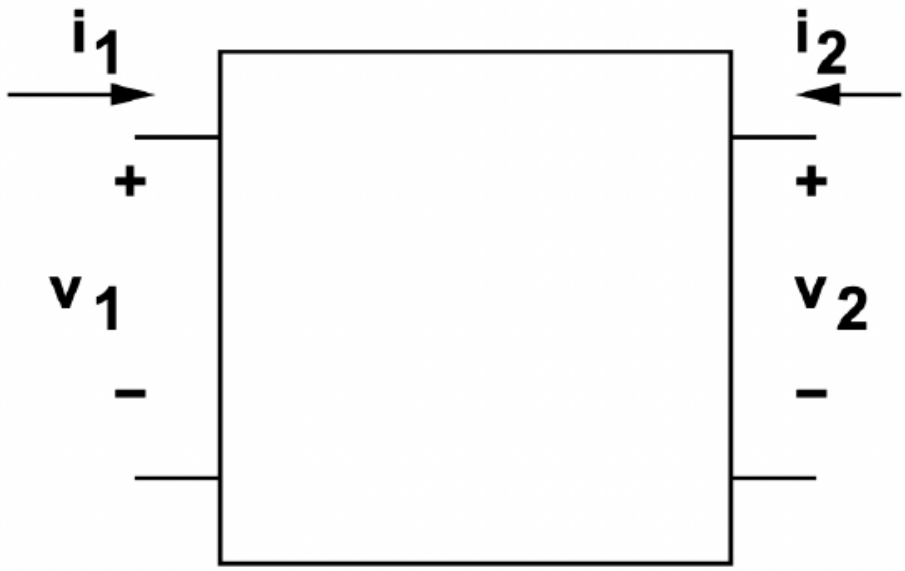

Figure 21: Two-Port Network

Then we may characterize the network in terms of the currents at its terminals in terms of the voltages, or, conversely, we may describe the voltages in terms of the currents at the terminals. These two ways of describing the network are said to be the admittance or impedance parameters. These may be written in the following way:

The impedance parameter point of view would yield, for a resistive network, the following relationship between voltages and currents:

$$\begin{bmatrix} v_1 \\ v_2 \end{bmatrix} = \begin{bmatrix} R_{11} & R_{12} \\ R_{21} & R_{22} \end{bmatrix} \begin{bmatrix} i_1 \\ i_2 \end{bmatrix}$$

Similarly, the admittance parameter point of view would yield a similar relationship:

$$\begin{bmatrix} i_1 \\ i_2 \end{bmatrix} = \begin{bmatrix} G_{11} & G_{12} \\ G_{21} & G_{22} \end{bmatrix} \begin{bmatrix} v_1 \\ v_2 \end{bmatrix}$$

These two relationships are, of course, the inverses of each other. That is:

$$\begin{bmatrix} G_{11} & G_{12} \\ G_{21} & G_{22} \end{bmatrix} = \begin{bmatrix} R_{11} & R_{12} \\ R_{21} & R_{22} \end{bmatrix}^{-1} \tag{1.8.1}$$

If the networks are linear and passive (i.e. there are no dependent sources inside), they also exhibit the property of reciprocity. In a reciprocal network, the transfer impedance or transfer admittance is the same in both directions. That is:

$$R_{12} = R_{21}$$
$$G_{12} = G_{21}$$

It is often useful to express two- port networks in terms of T or Π networks, shown in Figures 22 and 23.

Sometimes it is useful to cascade two-port networks, as is shown in Figure 24. The resulting combination is itself a two-port. Suppose we have a pair of networks characterized by impedance parameters:

$$\begin{bmatrix} v_1 \\ v_2 \end{bmatrix} = \begin{bmatrix} R_{11} & R_{12} \\ R_{12} & R_{22} \end{bmatrix} \begin{bmatrix} i_1 \\ i_2 \end{bmatrix}$$

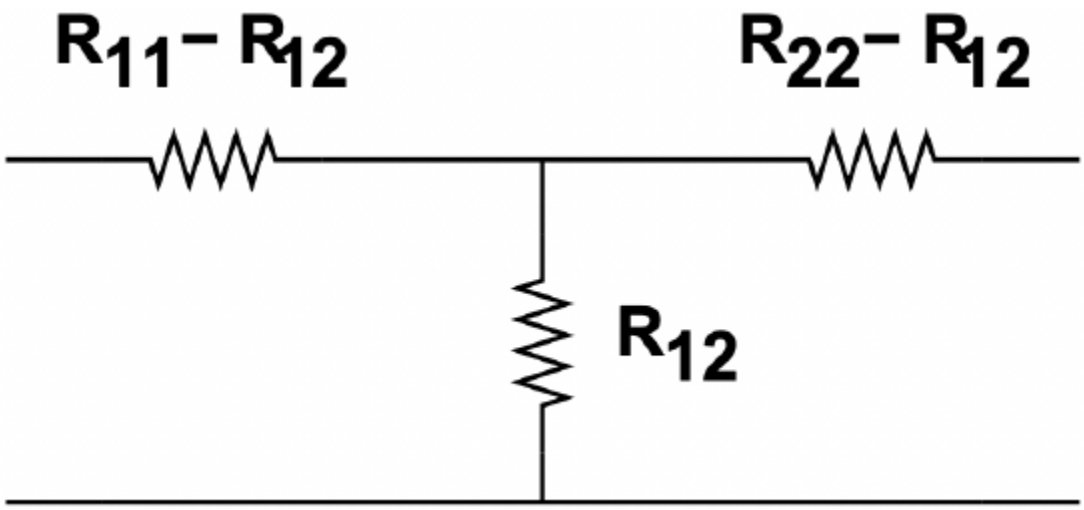

Figure 22: T- Equivalent Network

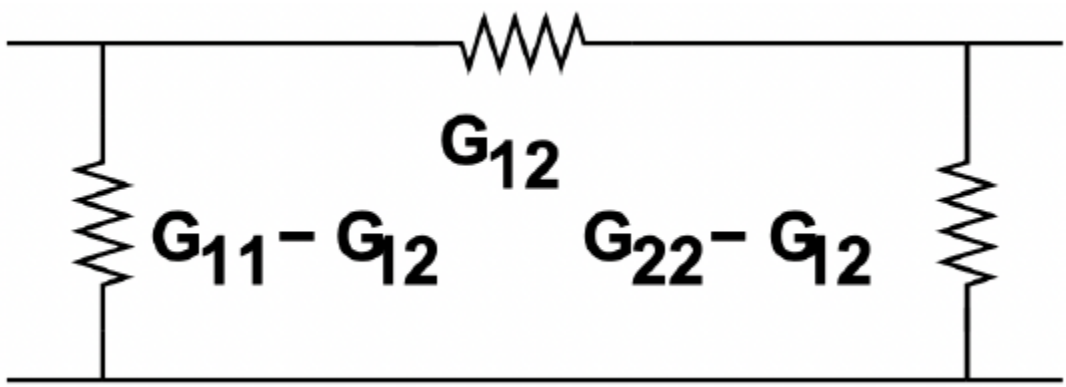

Figure 23: Π-Equivalent Network

$$\begin{bmatrix} v_3 \\ v_4 \end{bmatrix} = \begin{bmatrix} R_{33} & R_{34} \\ R_{34} & R_{44} \end{bmatrix} \begin{bmatrix} i_3 \\ i_4 \end{bmatrix}$$

By noting that $v_2 = v_3$ and $i_3 = -i_2$, it is possible to show, with a little manipulation, that:

$$\begin{bmatrix} v_1 \\ v_4 \end{bmatrix} = \begin{bmatrix} R'_{11} & R_{14} \\ R_{14} & R'_{44} \end{bmatrix} \begin{bmatrix} i_1 \\ i_4 \end{bmatrix}$$

where

$$R'_{11} = R_{11} - \frac{R_{12}^2}{R_{22}+R_{33}}$$
$$R'_{44} = R_{44} - \frac{R_{34}^2}{R_{22}+R_{33}}$$
$$R_{14} = \frac{R_{12}R_{34}}{R_{22}+R_{33}}$$

This page titled 1.8: Two Port Networks is shared under a CC BY-NC-SA 4.0 license and was authored, remixed, and/or curated by James Kirtley (MIT OpenCourseWare) via source content that was edited to the style and standards of the LibreTexts platform.

1.9: Inductive and Capacitive Circuit Elements

So far, we have dealt with circuit elements which have no memory and which, therefore, are characterized by instantaneous behavior. The expressions which are used to calculate what these elements are doing are algebraic (and for most elements are linear too). As it turns out, much of the circuitry we will be studying can be so characterized, with complex parameters.

However, we take a quick diversion to discuss briefly the transient behavior of circuits containing capacitors and inductors.

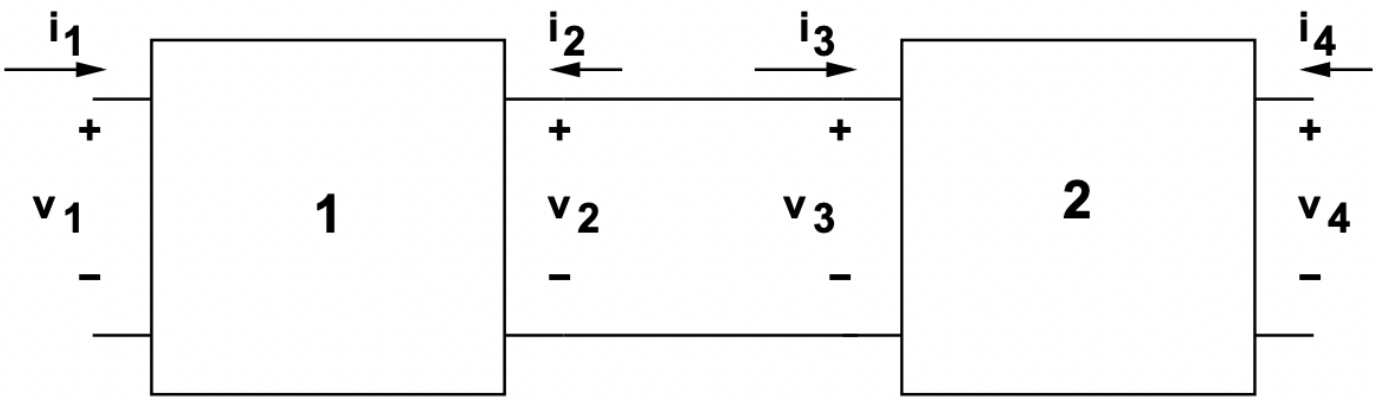

Figure 24: Cascade of Two-Port Networks

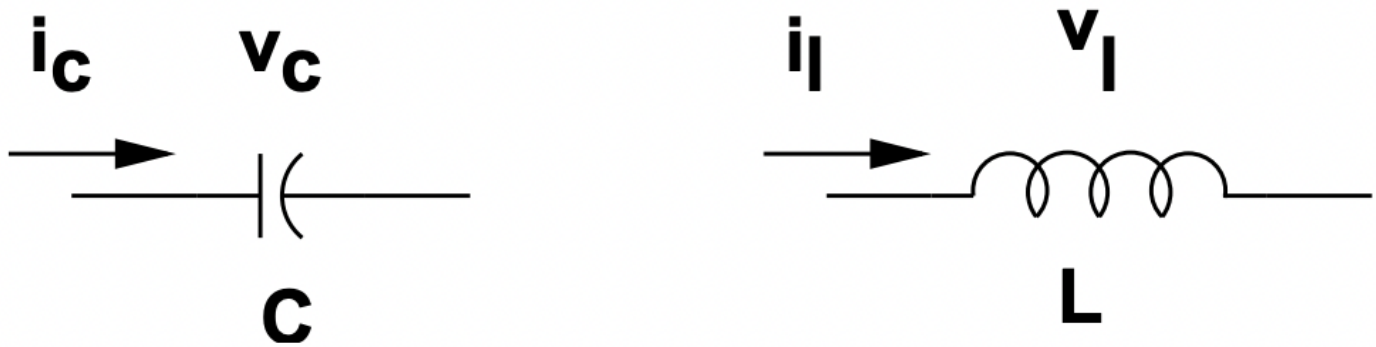

Figure 25: Capacitance and Inductance

Symbols for capacitive and inductive circuit elements are shown in Figure 25. They are characterized by the relationships between voltage and current:

$$i_c = C\frac{dv_c}{dt} \qquad v_\ell = L\frac{di_\ell}{dt} \tag{1.9.1}$$

Note that, while these elements are linear, since time derivatives are involved in their characterization, expressions describing their behavior in networks will become ordinary differential equations

Simple Case: R-C

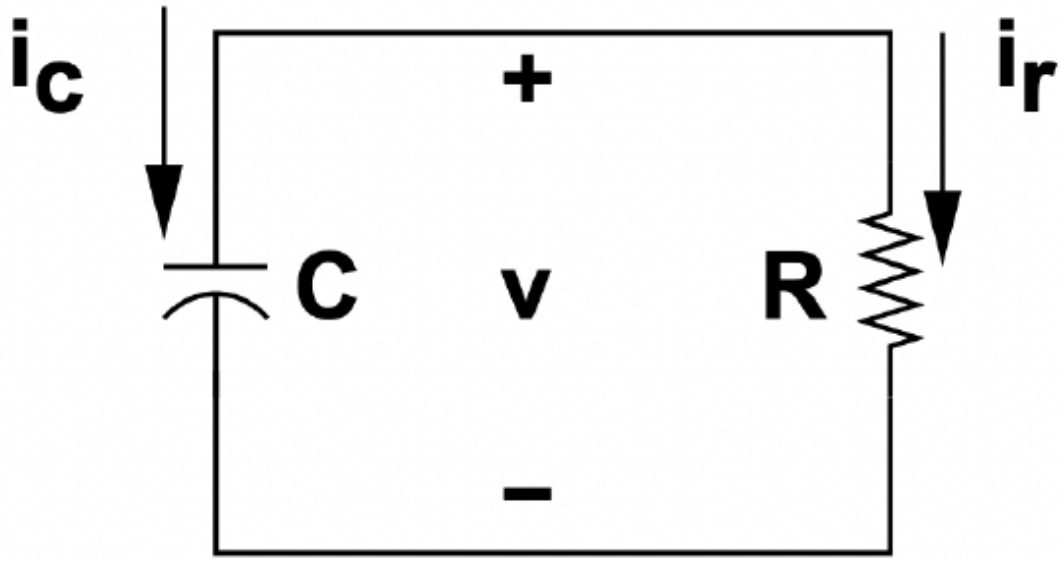

Figure 26: Simple Case: R-C

Figure 26 shows a simple connection of a resistance and a capacitance. This circuit has only two nodes, so there is a single voltage v across both elements. The two elements produce the constraints:

$$i_r = \frac{v}{R}$$
$$i_c = \frac{dv}{dt}$$

and, since $i_r = -i_c$,

$$\frac{dv}{dt} + \frac{1}{RC}v = 0$$

Now, we know that this sort of first-order, linear equation is solved by:

$$v \sim e^{-\frac{t}{RC}}$$

(To confirm this, just substitute the exponential into the differential equation.) Then, if we have some initial condition, say $v(t=0) = V_0$, then

$$v = V_0 e^{-\frac{t}{RC}}$$

This was a trivial case, since we don't describe how that initial condition might have taken place. But consider a closely related problem, illustrated in Figure 27.

Simple Case with Drive

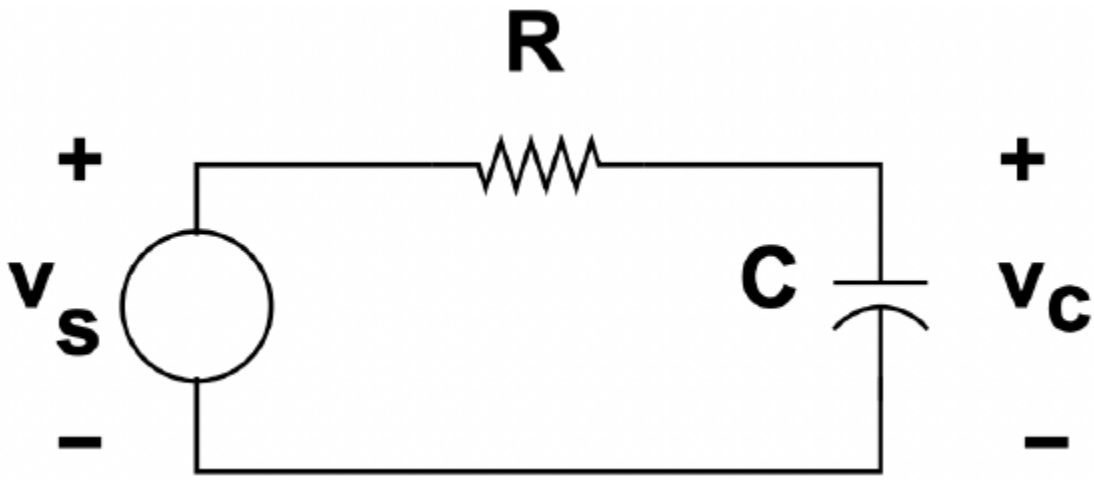

Figure 27: RC Circuit with Drive

The analysis of this circuit is accomplished by noting that it contains a single loop, and adding up the voltages around the loop we find:

$$RC\frac{dv_c}{dt} + v_c = v_s$$

Now, assume that the voltage source is a step:

$$v_s = V_s u_{-1}(t)$$

We should define the step function with some care, since it is of quite a lot of use. The step is one of a hierarchy of singularity functions. It is defined as:

$$u_{-1}(t) = \begin{cases} 0 & t < 0 \\ 1 & t > 0 \end{cases} \tag{1.9.2}$$

Now, remembering that differential equations have particular and homogeneous solutions, and that for $t > 0$ a particular solution which solves the differential equation is:

$$v_{cp} = V$$

Of course this does not satisfy the initial condition which is that the capacitance be uncharged: $v_c(t = 0+) = 0$. Again, remember that the whole solution is the sum of the particular and a homogeneous solution, and that the homogeneous solution is the un-driven case. To satisfy the initial condition, the homogeneous solution must be:

$$c_{ch} = -Ve^{-\frac{t}{RC}}$$

So that the total solution is simply:

$$v_c = V\left(1 - e^{-\frac{t}{RC}}\right)$$

Next, suppose $v_s = u_{-1}(t)V\cos\omega t$. We know the homogeneous solution must be of the same form, but the particular solution is a bit more complicated. In later chapters we will learn how to make the process of extracting the particular solution easier, but for the time being, let's assume that with a sinusoidal drive we will get a sinusoidal response of the same frequency. Thus we will guess

$$v_{cp} = V_{cp}\cos(\omega t - \phi)$$

The time derivative is

$$\frac{dv_{cp}}{dt} = \omega V_{cp}\sin(\omega t - \phi)$$

so that we can find an algebraic equation for the particular solution:

$$V\cos\omega t = V_{cp}(\cos(\omega t-\phi)+\omega RC\sin(\omega t-\phi))$$

Note the trigonometric identities:

$$\begin{aligned}\cos(\omega t-\phi) &= \cos\phi\cos\omega t+\sin\phi\sin\omega t\\ \sin(\omega t-\phi) &= -\sin\phi\cos\omega t+\cos\phi\sin\omega t\end{aligned}$$

Since the sine and cosine terms are orthogonal, we can equate coefficients of sine and cosine to get:

$$\begin{aligned}V &= V_{cp}[\cos\phi+\omega RC\sin\phi]\\ 0 &= V_{cp}[\sin\phi+\omega RC\cos\phi]\end{aligned}$$

The second of these can be solved for the phase angle:

$$\phi = \tan^{-1}\omega RC$$

and squaring both equations and adding:

$$V^2 = V_{cp}^2\left(1+(\omega RC)^2\right)$$

so that the particular solution is:

$$v_{cp} = \frac{V}{\sqrt{1+(\omega RC)^2}}\cos(\omega t-\phi)$$

Finally, if the capacitor is initially uncharged $(v_c(t=0+)=0)$, we can add in the homogeneous solution (we already know the form of this), and find the total solution to be:

$$v_cp = \frac{V}{\sqrt{1+(\omega RC)^2}}\left[\cos(\omega t-\phi)-\cos\phi e^{-\frac{t}{RC}}\right]$$

This is shown in Figure 28

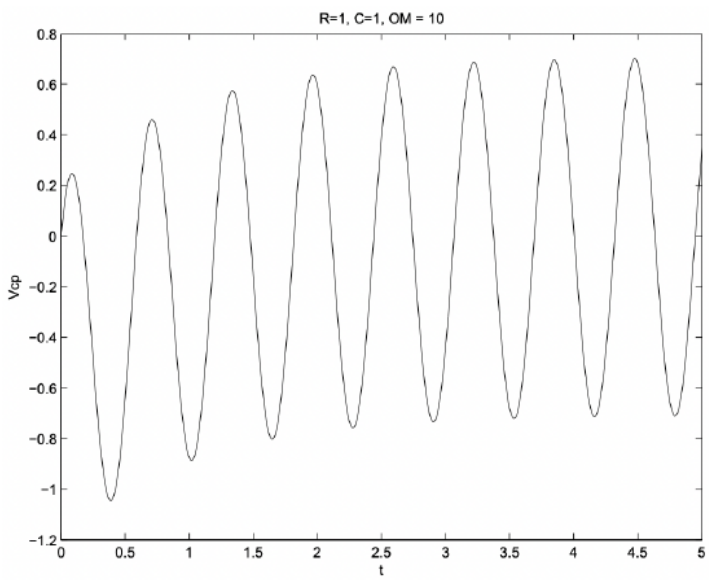

Figure 28: Output Voltage for RC Example

Second-Order System Example

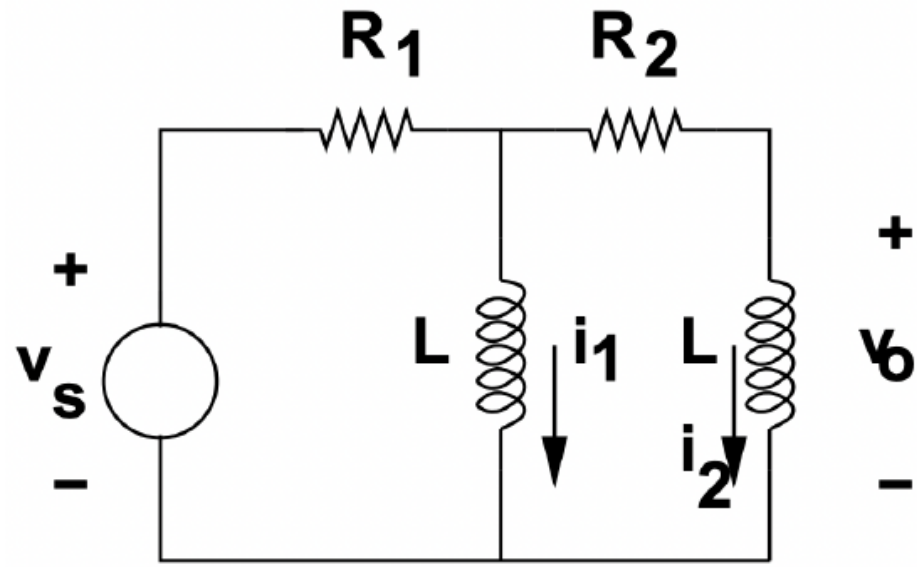

Figure 29: Two-Inductor Circuit

Figure 29 shows a network with two inductances and two resistances. Assume that this is driven by a voltage step: $v_s = V_s u_{-1}(t)$. Note that, with two inductances, we will require two initial conditions to complete the solution.

The steady state (particular) solution is $v_o = 0$. There will, of course, be current flowing in each of the inductances, but if excitation is constant there will be no time derivative of current so that voltage across each of the inductances will eventually fall to zero.

The initial conditions may be found by inspection. Right after $t = 0$ (note we use $t = 0+$ for this), output voltage must be:

$$v_o(t = 0+) = V_s$$

This must be so since current cannot be made to flow instantaneously in either inductance, so that there is no current in either resistance.

The second initial condition is the rate of change of voltage right after the instant of the voltage step. To find this, note that output voltage is equal to the source voltage minus the voltage drops across each of the two resistances.

$$v_o = v_s - R_2 i_2 - R_1 (i_1 + i_2)$$

If we differentiate this with respect to time and note that the time derivative of a constant (after the step the input voltage is constant) is zero:

$$\frac{dv_o}{dt}(t = 0+) = -(R_1 + R_2)\frac{di_2}{dt} - R_1 \frac{di_1}{dt}$$

Now, since right after the instant of the step both inductances have the source voltage V_s across them:

$$\left.\frac{di_1}{dt}\right|_{t=0+} = \left.\frac{di_2}{dt}\right|_{t=0+} = \frac{V_s}{L}$$

the rate of change of voltage at $t = 0+$ is:

$$\left.\frac{dv_o}{dt}\right|_{t=0+} = -\frac{2R_1 + R_2}{L} V_s$$

Now, we can find the homogeneous solution using the loop method. Setting the source to zero, assume a current i_a in the left-hand loop and i_b in the right-hand loop. KVL around these two loops yields:

$$R_1 i_a + L\frac{d}{dt}(i_a - i_b) = 0$$
$$R_2 i_b + 2L\frac{di_b}{dt} - L\frac{di_a}{dt} = 0$$

With a little manipulation, these become:

$$L\frac{di_a}{dt} + 2R_1 i_a + R_2 i_b = 0$$
$$L\frac{di_b}{dt} + R_1 i_a + R_2 i_b = 0$$

Assume that solutions are of the form Ie^{st}, and this set of simultaneous equations becomes:

$$\begin{bmatrix} (sL + 2R_1) & R_2 \\ R_1 & (sL + R_2) \end{bmatrix} \begin{bmatrix} I_a \\ I_b \end{bmatrix} = \begin{bmatrix} 0 \\ 0 \end{bmatrix}$$

We need to solve this for s (to find values of s for which this set is true, and that is simply the solution of the "characteristic equation"

$$(sL + 2R_1)(sL + R_2) - R_1 R_2 = 0$$

which is the same as:

$$s^2 + \frac{2R_1 + R_2}{L} s + \frac{R_1}{L}\frac{R_2}{L} = 0$$

Now, for the sake of "nice numbers", assume that R1 = 2R, R2 = 3R. The characteristic equation is:

$$s^2 + 7\frac{R}{L}s + 6\left(\frac{R}{L}\right)^2 = 0$$

which factors nicely into $\left(s + \frac{R}{L}\right)\left(s + 6\frac{R}{L}\right) = 0\ ), orthetwovaluesofsare\(\ s = -\frac{R}{L}$ and $s = -6\frac{R}{L}$.

Since the particular solution to this one is zero, we have a total solution which is:

$$v_o = Ae^{-\frac{R}{L}t} + Be^{-6\frac{R}{L}t}$$

The initial conditions are:

$$v_o\big|_{t=0+} = A + B = V_s$$
$$\left.\frac{dv_o}{dt}\right|_{t=0+} = -\frac{R}{L}(A + 6B) = -7\frac{R}{L}V_s$$

The solution to that pair of expressions is:

$$A = -\frac{V_s}{5} \qquad B = \frac{6V_s}{5}$$

and this is shown in Figure 30.

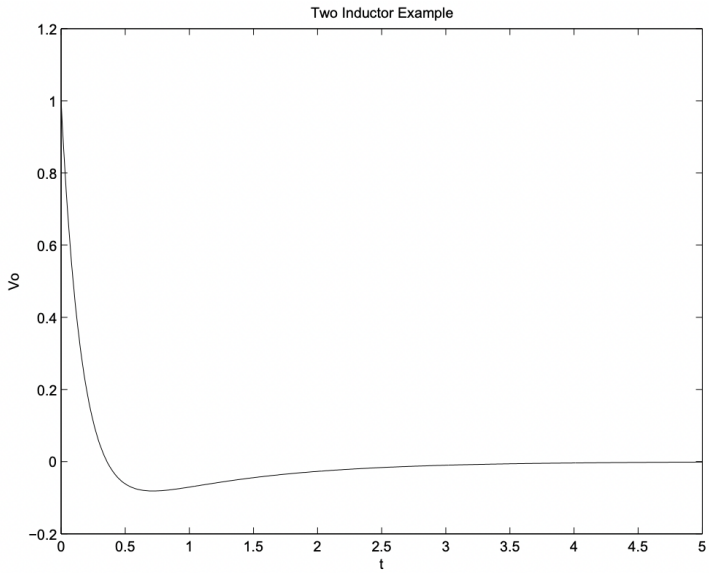

Figure 30: Output Voltage for Two Inductor Example

This page titled 1.9: Inductive and Capacitive Circuit Elements is shared under a CC BY-NC-SA 4.0 license and was authored, remixed, and/or curated by James Kirtley (MIT OpenCourseWare) via source content that was edited to the style and standards of the LibreTexts platform.

2: AC POWER FLOW IN LINEAR NETWORKS

Introduction

Electric power systems usually involve sinusoidally varying (or nearly so) voltages and currents. That is, voltage and current are functions of time that are nearly pure sine waves at fixed frequency. In North America, most ships at sea and eastern Japan that frequency is 60 Hz. In most of the rest of the world it is 50 Hz. Normal power system operation is at this fixed frequency, which is why we study how systems operate in this mode. We will deal with transients later.

This note deals with alternating voltages and currents and with associated energy flows. The focus is on sinusoidal steady state conditions, in which virtually all quantities of interest may be represented by single, complex numbers.

Accordingly, this section opens with a review of complex numbers and with representation of voltage and current as complex amplitudes with complex exponential time dependence. The discussion proceeds, through impedance, to describe a pictorial representation of complex amplitudes, called phasors. Power is then defined and, in sinusoidal steady state, reduced to complex form. Finally, flow of power through impedances and a conservation law are discussed.

Secondarily, this section of the notes deals with transmission lines that have interesting behavior, both in the time and frequency domails.

2.1: Transmission Lines

2.2: Complex Exponential Notation

2.3: Sinusoidal Time Functions

2.4: Impedance

2.5: System Functions and Frequency Response

2.6: Phasors

2.7: Energy and Power

2.8: A Conservation Law

2.9: Power Flow Through An Impedance

2.10: Compensated Line

This page titled 2: AC power flow in linear networks is shared under a CC BY-NC-SA 4.0 license and was authored, remixed, and/or curated by James Kirtley (MIT OpenCourseWare) via source content that was edited to the style and standards of the LibreTexts platform.

2.1: Transmission Lines

A transmission line is really a long, continuous thing. It has inductance which is really inductance per unit length multiplied by the line length, but it also has a continuous capacitance. We might attempt to represent a long transmission line as a series of relatively 'short' sections each represented by an inductance and a capacitance. These 'lumped parameter' models for lines are actually used in many system studies, particularly in physical analog models called 'Transmission System Simulators'. (We built one of these at MIT in the 1970's). After the next section you might contemplate the definition of 'short' for our purposes here, but generally each lumped parameter capacitance and resistance pair would represent a few to a few tens of miles.

Telegrapher's Equations

Peering at the model presented in Figure 22, one might divine that a proper representation of voltage and current, both of which are functions of time and distance along the line, might be:

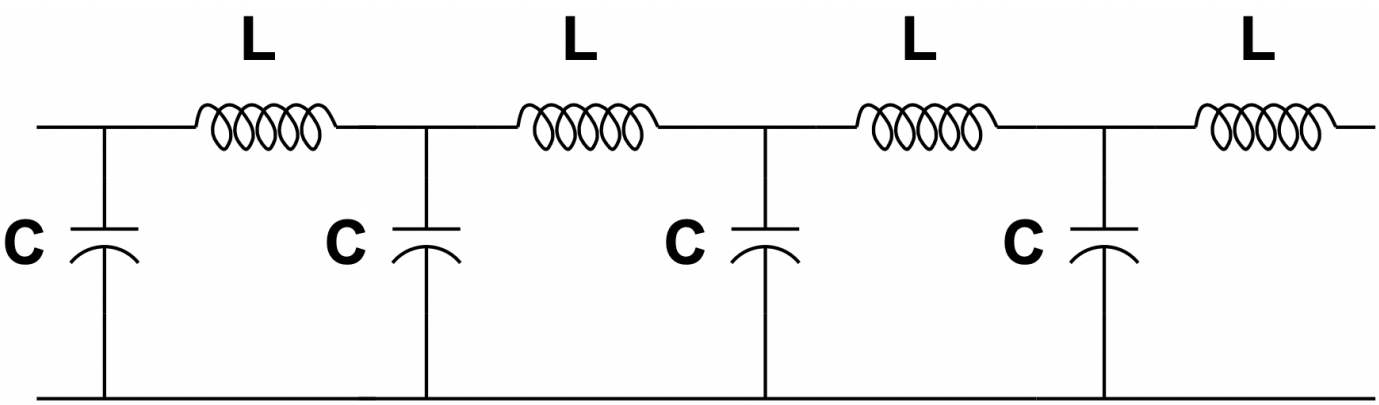

Figure 22: Transmission Line Lumped Parameter Model

$$\frac{\partial v}{\partial x} = -L_l \frac{\partial i}{\partial t}$$
$$\frac{\partial i}{\partial x} = -C_l \frac{\partial v}{\partial t}$$

These are known as the "Telegrapher's Equations" and represent the fact that inductance presents voltage drop along the line in proportion to rate of change of current and that capacitance presents a change in current along the line in proportion to rate of change of voltage.

It is not difficult to eliminate either voltage or current from these to produce a wave equation. For example, take the cross-derivatives and substitute the second of these equations into the first to get:

$$\frac{\partial^2 v}{\partial x^2} = L_l C_l \frac{\partial^2 v}{\partial t^2}$$

Now: this equation is solved by arbitrary functions which are of the form:

$$v(x,t) = v(x \pm ut)$$

where the wave velocity is:

$$u = \frac{1}{\sqrt{L_l C_l}}$$

So now we can see that the voltage on the line is the sum of some waveform going in the 'positive' direction and something else going in the 'negative' direction:

$$v(x,t) = v_+(x - ut) + v_-(x + ut)$$

The same will be true of current, and substituting back into either of the telegrapher's equations yields:

$$i(x,t) = \frac{1}{L_l u}\left(v_+(x-ut) - v_-(x+ut)\right)$$

the product of inductance times wave velocity has the units of impedance:

$$L_l u = \sqrt{\frac{L_l}{C_l}} = Z_0$$

This is often referred to as the 'characteristic impedance' of the transmission line. This is also a commonly used term: transmission cables are often referred to by their characteristic impedances. For coaxial wires 50 to 72 ohms are common values. For high tension transmission lines somewhat higher values are to be expected.

Surges on Transmission Lines

Consider the situation shown in Figure 23. Here the left-hand end of the line is driven by a current source with a pulse (illustrated is a square pulse). This is actually not too far from the situation that transmission lines experience with lightning, which is usually representable as a current source, typically of magnitude between 20 and 100 kA and duration of about 1μS. (Actually, it is not a square pulse but that is not important here).

What will happen, if the pulse is short enough, is that it will launch a traveling wave in which $v_+ = Z_0 i_+$ and i_+ is the current that was imposed. When this pulse reaches the far, or load end of the line, we have the situation in which at that point:

$$v(t) = v_+ + v_-$$
$$i(t) = \frac{v_+}{Z_0} - \frac{V_-}{Z_0}$$

and, of coures, $v = Ri$.

The 'reflected', or negative going wave will have magnitude:

$$v_- = v_+ \frac{\frac{R}{Z_0} - 1}{\frac{R}{Z_0} + 1}$$

In the extreme case of an open circuit, the magnitude of the voltage pulse at the end of the transmission line is exactly twice that of the propagating pulse. In the case of a short circuit, of course, the magnitude of the voltage is zero, the current in the short is double the current of the pulse itself, and the pulse is reflected, but going in the reverse direction with a polarity the opposite of the forward-going pulse. This is illustrated in cartoon form in Figure 23.

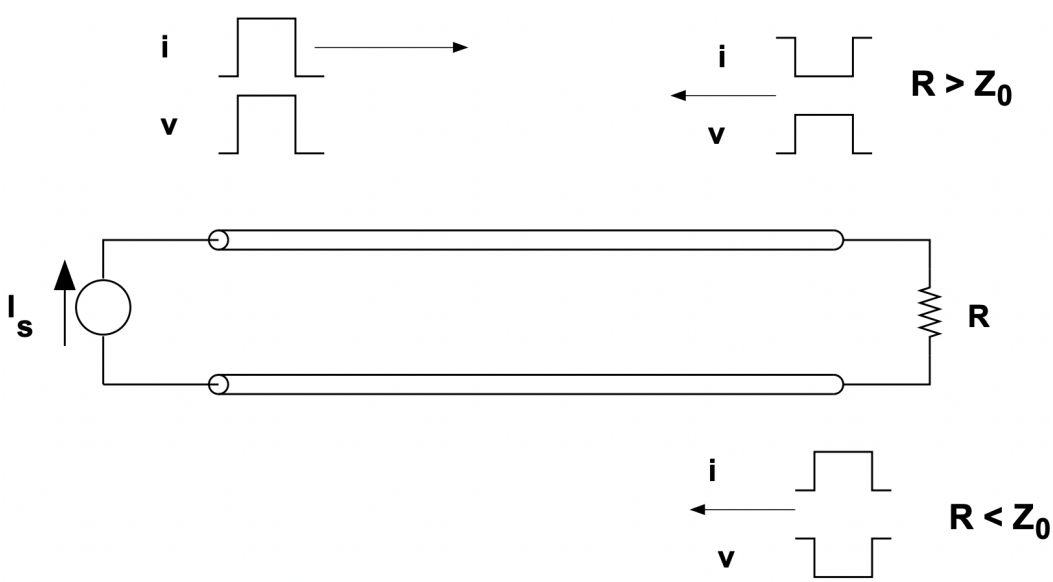

Figure 23: Pulse Propagation on a Transmission Line

Sinusoidal Steady State

Now, consider a transmission line operating in the sinusoidal steady state. As suggested by Figure 24, it is driven by a voltage source at one end and is loaded by a resistive load at the other. Consistent with the voltage and currents that we know can exist on such a line, we know they will be of this form:

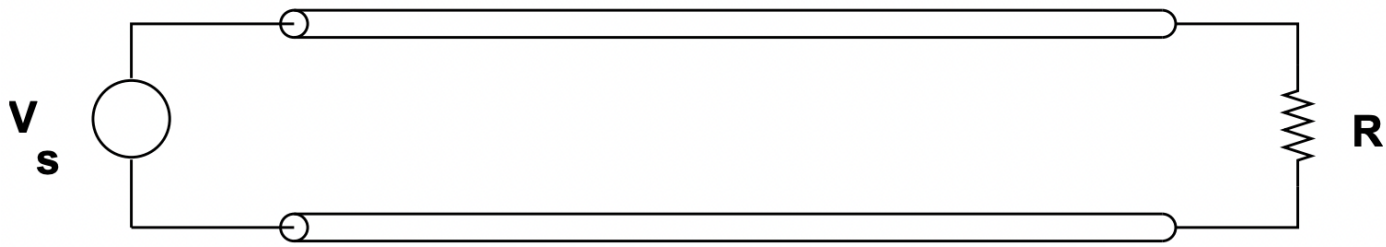

Figure 24: Transmission Line in Simple Configuration

$$v(x,t) = \mathrm{Re}\left\{\underline{V}_{+} e^{j(\omega t - kx)} + \underline{V}_{-} e^{j(\omega t + kx)}\right\}$$
$$i(x,t) = \mathrm{Re}\left\{\frac{V_{+}}{Z_0} e^{j(\omega t - kx)} - \frac{V}{Z_0} e^{j(\omega t + kx)}\right\}$$

Where the phase velocity is $u = \frac{\omega}{k} = \frac{1}{\sqrt{L_l C_l}}$.

At the termination end of the line, at $x = \ell$

Erroneous nesting of equation structures

This may be solved for the ratio of 'reverse' to 'forward' amplitude:

Erroneous nesting of equation structures

Since at the 'sending' end:

Erroneous nesting of equation structures

With a little manipulation it can be determined that

$$\underline{V}_r = V_s \frac{e^{-jk\ell}\left[\left(\frac{R}{Z_0}+1\right)+\left(\frac{R}{Z_0}-1\right)\right]}{\left(\frac{R}{Z_0}+1\right)+e^{-2jk\ell}\left(\frac{R}{Z_0}-1\right)}$$

Further manipulation yields:

$$\underline{V}_r = V_s \frac{\frac{R}{Z_0}}{\frac{R}{Z_0}\cos k\ell + j\sin k\ell}$$

This might be made a bit more comprehensible when turned into a magnitude:

$$\left|\frac{V_r}{V_s}\right| = \frac{\frac{R}{Z_0}}{\sqrt{\left(\frac{R}{Z_0}\cos k\ell\right)^2 + (\sin k\ell)^2}}$$

If the line is loaded with a resistance equivalent to the 'surge impedance' (so-called 'surge impedance loading', the receiving end voltage is the same as the sending end voltage. If it is more heavily loaded, the receiving end voltage is less than the sending end and if it is less heavily loaded the receiving end voltage is greater.

This page titled 2.1: Transmission Lines is shared under a CC BY-NC-SA 4.0 license and was authored, remixed, and/or curated by James Kirtley (MIT OpenCourseWare) via source content that was edited to the style and standards of the LibreTexts platform.

2.2: Complex Exponential Notation

Start by recognizing a geometric interpretation for a complex number. If we plot the real part on the horizontal (x) axis and the imaginary part on the vertical (y) axis, then the complex number $\underline{z} = x + jy$ (where $j = \sqrt{-1}$) represents a vector as shown in Figure 1. Note that this vector may be represented not only by its real and imaginary components, but also by a magnitude and a phase angle:

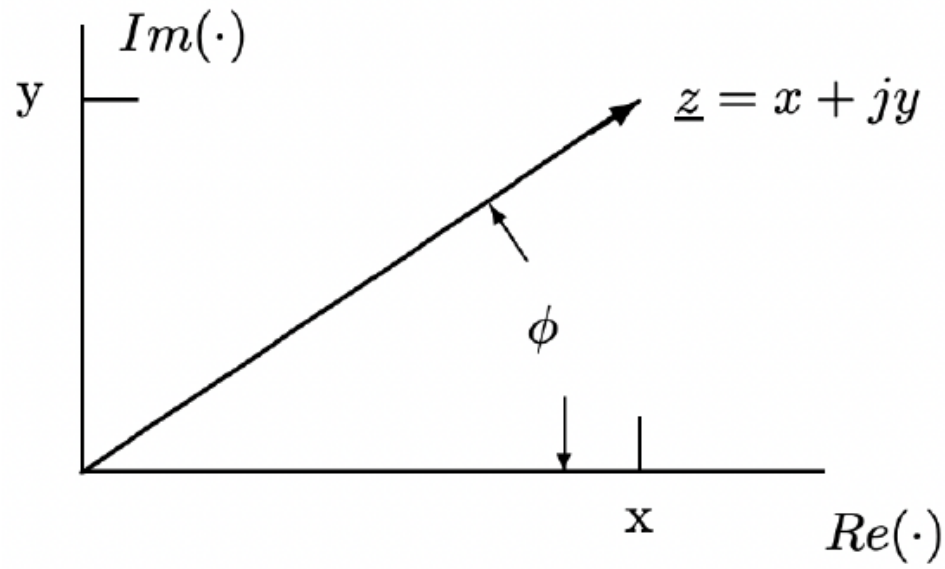

Figure 1: Representation of the complex number

$$\underline{z} = x + jy$$

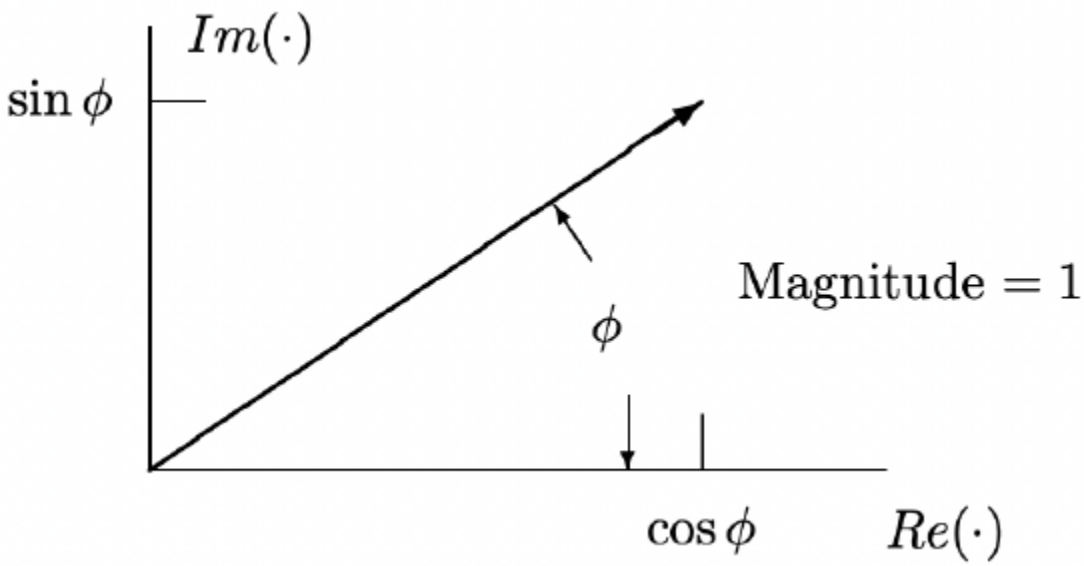

Figure 2: Representation of

$$|\underline{z}| = \sqrt{x^2 + y^2} \tag{2.2.1}$$

$$\phi = \arctan\left(\frac{y}{x}\right) \tag{2.2.2}$$

The basis for complex exponential notation is the celebrated Euler Relation:

$$e^{j\phi} = \cos(\phi) + j\sin(\phi) \tag{2.2.3}$$

which has a representation as shown in Figure 2.

Now, a comparison of Figures 1 and 2 makes it clear that, with definitions (1) and (2),

$$\underline{z} = x + jy = |\underline{z}|e^{j\phi} \tag{2.2.4}$$

It is straightforward, using (3) to show that:

$$\cos(\phi) = \frac{e^{j\phi} + e^{-j\phi}}{2} \tag{2.2.5}$$

$$\sin(\phi) = \frac{e^{j\phi} - e^{-j\phi}}{2j} \tag{2.2.6}$$

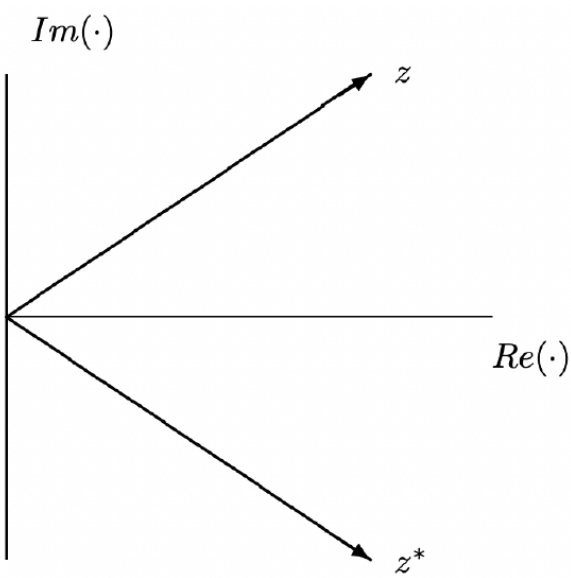

Figure 3: Representation Of A Complex Number And Its Conjugate

The complex exponential is a tremendously useful type of function. Note that the product of two numbers expressed as exponenentials is the same as the exponential of the sums of the two exponents:

$$e^a e^b = e^{a+b} \tag{2.2.7}$$

Note that it is also true that the reciprocal of a number in exponential notation is just the exponential of the negative of the exponent:

$$\frac{1}{e^a} = e^{-a} \tag{2.2.8}$$

Then, if we have two numbers $\underline{z}_1 = |\underline{z}_1| e^{j\phi_1}$ and $\underline{z}_2 = |\underline{z}_2| e^{j\phi_2}$, then the product of the two numbers is:

$$\underline{z}_1\underline{z}_2 = |\underline{z}_1||\underline{z}_2| e^{j(\phi_1+\phi_2)} \tag{2.2.9}$$

and the ratio of the two numbers is:

$$\frac{\underline{z}_1}{\underline{z}_2} = \frac{|\underline{z}_1|}{|\underline{z}_2|} e^{j(\phi_1-\phi_2)} \tag{2.2.10}$$

The complex conjugate of a number $\underline{z} = x + jy$ is given by:

$$z^* = x - jy \tag{2.2.11}$$

The sum of a complex number and its conjugate is real:

$$\underline{z} + \underline{z}^* = 2\,\mathrm{Re}(\underline{z}) = 2x \tag{2.2.12}$$

while the difference is imaginary:

$$\underline{z} - \underline{z}^* = 2j\,\mathrm{Im}(\underline{z}) = 2jy \tag{2.2.13}$$

where we have used the two symbols $Re(\cdot)$ and $Im(\cdot)$ to represent the operators which extract the real and imaginary parts of the complex number.

The complex conjugate of a complex number $\underline{z} = |\underline{z}|e^{j\phi}$ may also be written as:

$$\underline{z}^* = |\underline{z}|e^{-j\phi} \tag{2.2.14}$$

so that the product of a complex number and its conjugate is real:

$$\underline{z}\underline{z}^* = |\underline{z}|e^{j\phi}|\underline{z}|e^{-j\phi} = |\underline{z}|^2 \tag{2.2.15}$$

This page titled 2.2: Complex Exponential Notation is shared under a CC BY-NC-SA 4.0 license and was authored, remixed, and/or curated by James Kirtley (MIT OpenCourseWare) via source content that was edited to the style and standards of the LibreTexts platform.

2.3: Sinusoidal Time Functions

A sinusoidal function of time might be written in at least two ways:

$$f(t) = A\cos(\omega t + \phi) \tag{2.3.1}$$

$$f(t) = B\cos(\omega t) + C\sin(\omega t) \tag{2.3.2}$$

A third way of writing this time function is as the sum of two complex exponentials:

$$f(t) = \underline{X}e^{j\omega t} + \underline{X}^* e^{-j\omega t} \tag{2.3.3}$$

Note that the form of equation 19, in which complex conjugates are added together, guarantees that the resulting function is real.

Now, to relate equation 19 with the other forms of the sinusoidal function, equations 17 and 18, see that $\underline{X}$ may be expressed as:

$$\underline{X} = |\underline{X}|e^{j\psi} \tag{2.3.4}$$

Then equation 19 becomes:

$$f(t) = |\underline{X}|e^{j\psi}e^{j\omega t} + |\underline{X}|^* e^{-j\psi}e^{-j\omega t} \tag{2.3.5}$$

$$= |\underline{X}|e^{j(\psi+\omega t)} + |\underline{X}|^* e^{-j(\psi+\omega t)} \tag{2.3.6}$$

$$= 2|\underline{X}|\cos(\omega t + \psi) \tag{2.3.7}$$

Then, the coefficients in equation 17 are related to those of equation 19 by:

$$|\underline{X}| = \frac{A}{2} \tag{2.3.8}$$

$$\psi = \phi \tag{2.3.9}$$

Alternatively, we could write

$$\underline{X} = x + jy \tag{2.3.10}$$

in which the real and imaginary parts of $\underline{X}$ are:

$$x = |\underline{X}|\cos(\psi) \tag{2.3.11}$$

$$y = |\underline{X}|\sin(\psi) \tag{2.3.12}$$

Then the time function is written:

$$f(t) = x\left(e^{j\omega t} + e^{-j\omega t}\right) + jy\left(e^{j\omega t} - e^{-j\omega t}\right) \tag{2.3.13}$$

$$= 2x\cos(\omega t) - 2y\sin(\omega t) \tag{2.3.14}$$

Thus:

$$A = 2x \tag{2.3.15}$$

$$B = -2y \tag{2.3.16}$$

$$X = \frac{A}{2} - j\frac{B}{2} \tag{2.3.17}$$

It is also possible to write equation 19 in the form:

$$f(t) = Re\left(2\underline{X}e^{j\omega t}\right) \tag{2.3.18}$$

While both expressions (19 and 34) are equivalent, it is advantageous to use one or the other of them, according to circumstances. The first notation (equation 19) is the full representation of that sinusoidal signal and may be used under any circumstances. It is, however, cumbersome, so that the somewhat more compact version(equation 34) is usually used. Chiefly when nonlinear products such as power are involved, it is necessary to be somewhat cautions in its use, however, as we will see later on.

This page titled 2.3: Sinusoidal Time Functions is shared under a CC BY-NC-SA 4.0 license and was authored, remixed, and/or curated by James Kirtley (MIT OpenCourseWare) via source content that was edited to the style and standards of the LibreTexts platform.

2.4: Impedance

Because it is so easy to differentiate a complex exponential time signal, such a way of representing time signals has real advantages in electric circuits with all kinds of linear elements. In Section 1 of these notes, we introduced the linear resistance element, in which voltage and current are linearly related. We must now consider two other elements, inductances and capacitances. The inductance produces a relationship between voltage and current which is:

Figure 4: Inductance and Capacitance Elements

$$v_L = L\frac{di_L}{dt} \tag{2.4.1}$$

If voltage and current are sinusoidal functions of time:

$$v = \underline{V}e^{j\omega t} + \underline{V}^* e^{-j\omega t}$$
$$i = \underline{I}e^{j\omega t} + \underline{I}^* e^{-j\omega t}$$

Then the relationship between voltage and current is given simply by:

$$\underline{V} = j\omega L\underline{I} \tag{2.4.2}$$

This is a particularly simple form, and as can be seen is directly analogous to resistance. We can generalize our view of resistance to complex impedance (or simply impedance), in which inductances have impedance which is:

$$\underline{Z}_L = j\omega L \tag{2.4.3}$$

The capacitance element is similarly defined. A capacitance has a voltage-current relationship:

$$i = C\frac{dv_C}{dt} \tag{2.4.4}$$

Thus the impedance of a capacitance is:

$$\underline{Z}_C = \frac{1}{j\omega C} \tag{2.4.5}$$

The extension to resistive network behavior is now obvious. For problems in sinusoidal steady state, in which all excitations are sinusoidal, we may use all of the tricks of linear, resistive network analysis. However, we use complex impedance in place of resistance.

The inverse of impedance is admittance:

$$\underline{Y} = \frac{1}{\underline{Z}}$$

Series and parallel combinations of admittances and impedances are, of course, just like those of conductances and resistances. For two elements in series or in parallel:

Series:

$$\underline{Z} = \underline{Z}_1 + \underline{Z}_2 \tag{2.4.6}$$

$$\underline{Y} = \frac{\underline{Y}_1 \underline{Y}_2}{\underline{Y}_1 + \underline{Y}_2} \tag{2.4.7}$$

Parallel:

$$\underline{Z} = \frac{\underline{Z}_1 \underline{Z}_2}{\underline{Z}_1 + \underline{Z}_2} \tag{2.4.8}$$

$$\underline{Y} = \underline{Y}_1 + \underline{Y}_2 \tag{2.4.9}$$

Example

Suppose we are to find the voltage $v(t)$ in the network of Figure 5, in which $i(t) = I\cos(\omega t)$. The excitation may be written as:

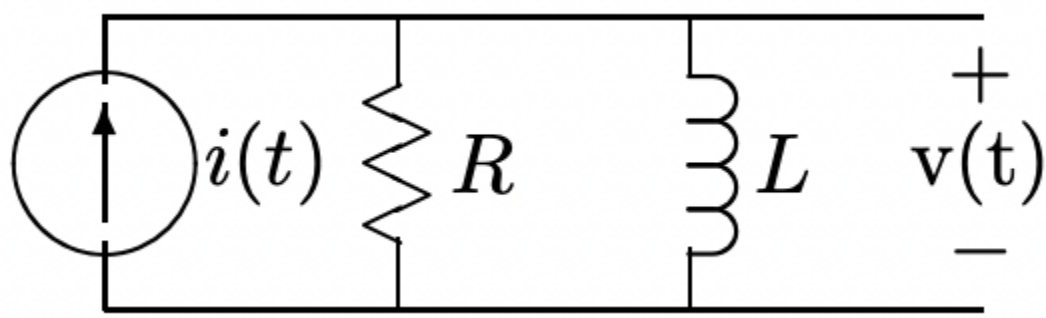

Figure 5: Complex Impedance Network

$$i(t) = \tfrac{I}{2}e^{j\omega t} + \tfrac{I}{2}e^{-j\omega t} = \mathrm{Re}\left(Ie^{j\omega t}\right)$$

Now, the complex impedance of the parallel combination of R and L is:

$$R \| j\omega L = \tfrac{Rj\omega L}{R + j\omega L}$$

So that, if $v(t)$ is represented by:

$$\begin{aligned} v(t) &= \frac{V}{2}e^{j\omega t} + \frac{V}{2}e^{-j\omega t} \\ &= Re\left(\underline{V}e^{j\omega t}\right) \end{aligned}$$

Then

$$\underline{V} = \tfrac{Rj\omega L}{R + j\omega L} I$$

Now: the impedance $\underline{Z}$ may be represented by a magnitude and phase angle:

$$\begin{aligned} \underline{Z} &= |\underline{Z}|e^{j\phi} \\ |\underline{Z}| &= \frac{\omega L R}{\sqrt{(\omega L)^2 + R^2}} \\ \phi &= \frac{\pi}{2} - \arctan\frac{\omega L}{R} \end{aligned}$$

Then, using relations developed here, $v(t)$ may be written as:

$$v(t) = \tfrac{\omega L I}{\sqrt{1 + \left(\frac{\omega L}{R}\right)^2}} \cos(\omega t + \phi)$$

Note that this expression represents only the sinusoidal steady state solution, and therefore does not represent any starting transients.

This page titled 2.4: Impedance is shared under a CC BY-NC-SA 4.0 license and was authored, remixed, and/or curated by James Kirtley (MIT OpenCourseWare) via source content that was edited to the style and standards of the LibreTexts platform.

2.5: System Functions and Frequency Response

If we are interested in the behavior of a linear system such as the circuits we have been discussing, we often speak of the system function. This is the (usually complex) ratio between output and input of the system. System functions can express driving point behavior (impedance or its reciprocal, admittance) or transfer behavior. We speak of voltage or current transfer ratios and of transfer impedance (output voltage related to input current) and transfer admittance (output current related to input voltage).

The system function may be expressed in a number of ways, often as a Laplace Transform. Such is beyond the scope of this subject. However, it is important to understand one way of expressing linear system behavior, in the form of frequency response. The frequency response of a system is the complex number that relates output of the system to input as a function of frequency. Usually it is expressed as a pair of numbers, magnitude and phase angle. Thus

$$H(j\omega) = |H(j\omega)|e^{j\phi(j\omega)}$$

Subjects in Signals and Systems or Network Theory often spend some time on how to obtain and plot the frequency response of a network in ways which are both useful and easy. For our purposes, a straightforward, perhaps even “brute force” approach will do. Consider, for example, the circuit shown in Figure 6.

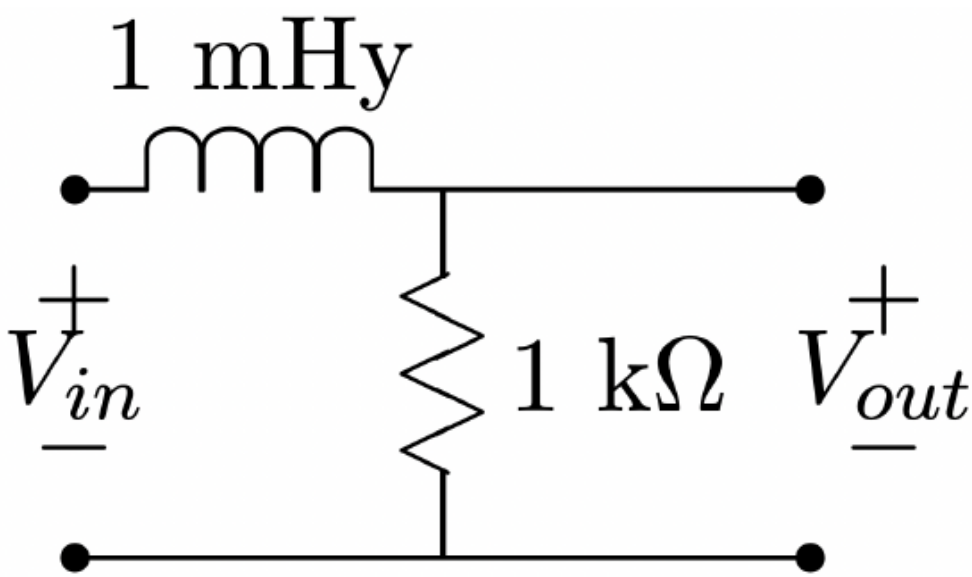

Figure 6: Example Circuit for Frequency Response

This is just a voltage divider between an inductance and a resistance. We seek to find, and then plot, the transfer ratio $V_{\text{out}}/V_{\text{in}}$ of this network. A very little analysis yields an expression for the transfer function, which is:

$$\frac{V_{\text{out}}(j\omega)}{V_{\text{in}}(j\omega)} = \frac{R}{R + j\omega L} = \frac{1}{1 + j\omega\frac{L}{R}}$$

The magnitude and angle of this function can be extracted in a number of ways. For the purpose of these notes, we have done the mathematics using MATLAB. The specific instructions for producing the frequency response plot are shown in Figure 7. Funamentally what is done is to compute the system function for a number of frequencies (note that we use a way of computing specific frequencies which produces a uniform spacing on a logarithmic scale, and then plotting the magnitude (also on a logarithmic scale) and angle of that system function against frequency.

This page titled 2.5: System Functions and Frequency Response is shared under a CC BY-NC-SA 4.0 license and was authored, remixed, and/or curated by James Kirtley (MIT OpenCourseWare) via source content that was edited to the style and standards of the LibreTexts platform.

2.6: Phasors

Phasors are not weapons. They are a handy geometric trick which help us understand the nature of sinusoidal steady state signals and systems. To start, consider the basis for complex exponential time notation, the function $e^{j\omega t}$. At any instant of time, this is a complex number: at time $t=0$ it is equal to 1, at time $\omega t=\frac{\pi}{2}$ it is equal to j, and so forth. We may describe this function as a vector, of length unity, rotating about the origin of the complex number plane, with angular velocity ω. It has, of course, both real and imaginary parts, which are just the projections of the vector onto the real and imaginary axes.

Now consider a sinusoidally varying signal $x(t)$, which may be represented by:

$$x(t)=\frac{X}{2}e^{j\omega t}+\frac{X^*}{2}e^{-j\omega t}$$

This is the sum of two numbers, complex conjugates, which are, as functions of time, rotating in opposite directions in the complex plane. The sum of the two is, of course, real. This is the same time function as:

$$x(t)=\operatorname{Re}\left(\underline{X}e^{j\omega t}\right) \tag{2.6.1}$$

where the real part operator $Re(\cdot)$ simply takes the projection of the function on the real axis.

It might be helpful at this point to remember one of the features of complex arithmetic. Multiplication of two complex numbers results in a third complex number which has:

```
L=1e-3;                          % Set Parameter Values
R=1000;
e=3:.05:7;                       % This is a way of producing evenly
f=10 .^ e;                       % spaced points on a logarithmic chart
om=2*pi .* f;                    % Frequency in radians per second
H = 1 ./ (1 + j*L/R .* om);      % This is the frequency response
subplot(211);
loglog(f, abs(H))                % Plot of magnitude
xlabel('Frequency, Hz');
ylabel('Magnitude');
grid
subplot(212);
semilogx(f, angle(H))            % Plot of angle
xlabel('Frequency, Hz')
ylabel('Angle')
grid
title('Frequency Response of L-R')
print('freq.ps')
```

Figure 7: MATLAB Program freq.m

1. a magnitude which is the product of the magnitudes of the two numbers begin multiplied and,
2. an angle which is the sum of the angles of the two numbers being multiplied.

Thus, multiplying a number by $e^{j\omega t}$, which has a magnitude of unity and an angle which is increasing with time at the rate ω, simply has the effect of setting that number spinning around the origin of the complex plane.

It is therefore relatively easy to represent sinusoidally varying signals with just their complex amplitudes, understanding that they also include $e^{j\omega t}$, which provides time variation. The complex amplitude includes not only the magnitude of the signal, but also a phase angle. Usually the phase angle by itself is of little use, and must be related to some time reference. That is, as we will see, it is the difference between phase angles that is important in most cases.

Impedances and admittances are also complex numbers, so that phasors can be used to visualize the relationship between voltages and currents in a network. The key here is that multiplication and division of complex numbers is the same as multiplication or division of magnitudes and addition or subtraction of angles.

Example

Consider the simple network shown in Figure 9, and suppose that the current source is sinusoidal:

$$i = \mathrm{Re}\left(\underline{I}e^{j\omega t}\right)$$

The impedance of the R-L combination is a complex number:

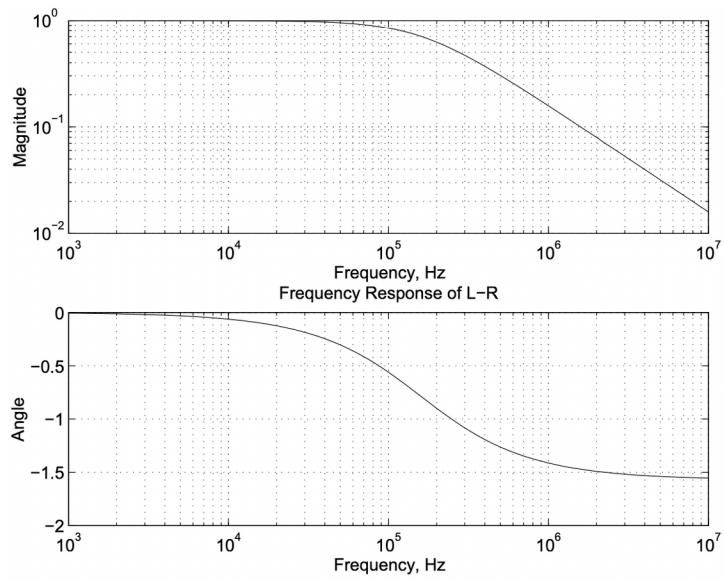

Figure 8: Frequency Response

$$\underline{Z} = R + j\omega L = 1 + j2$$

Now: the impedance may be represented in the complex plane as shown in Figure 10.

Voltage v is given by:

$$v = Re\left(\underline{V}e^{j\omega t}\right)$$

where:

$$\underline{V} = \underline{ZI}$$

Then the relationship between voltage and current is as shown in Figure 11. Note that the phase angle between voltage and current is the same as the phase angle of the impedance.

Note that KVL may be represented graphically in the fashion of Figure 12.

This page titled 2.6: Phasors is shared under a CC BY-NC-SA 4.0 license and was authored, remixed, and/or curated by James Kirtley (MIT OpenCourseWare) via source content that was edited to the style and standards of the LibreTexts platform.

2.7: Energy and Power

For any terminal pair with voltage and current defined as shown in Figure 13, power flow into the element is:

$$p = vi \tag{2.7.1}$$

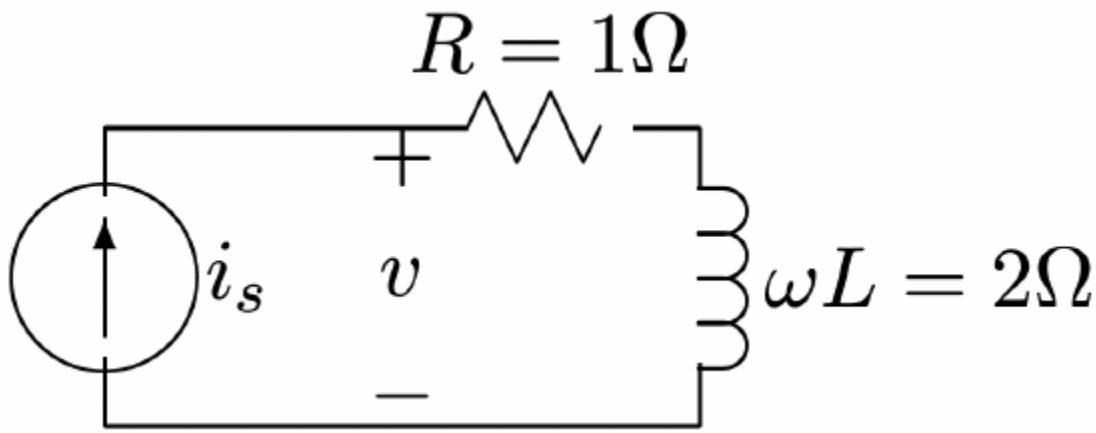

Figure 9: Example Circuit

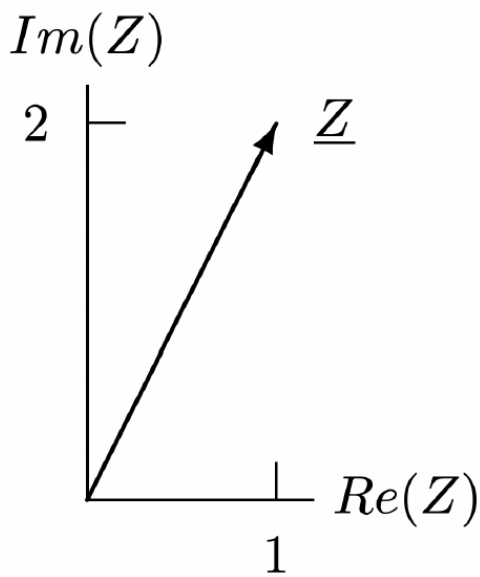

Figure 10: Complex Impedance

Power is expressed in Watts (W), and one Watt is the product of one Volt and one Ampere. Energy transferred over an interval of time t_0 to t_1 is the integral of power:

$$w = \int_{t_0}^{t_1} v(t)i(t)dt \tag{2.7.2}$$

Energy is expressed in Joules, and one Joule is one Watt- Second. A Joule is also a Newton-Meter (force times distance), and therefore a Watt is a Newton-Meter per Second.

Consider the behavior of the three types of linear, passive elements we have encountered:

- $$p = Ri^2 = \frac{v^2}{R} \tag{2.7.3}$$

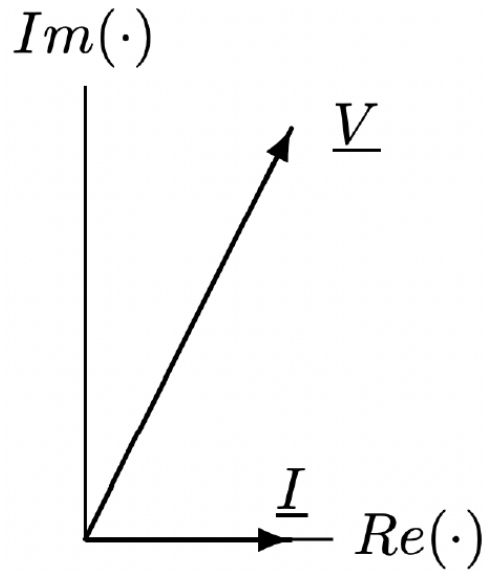

Figure 11: Voltage and Current

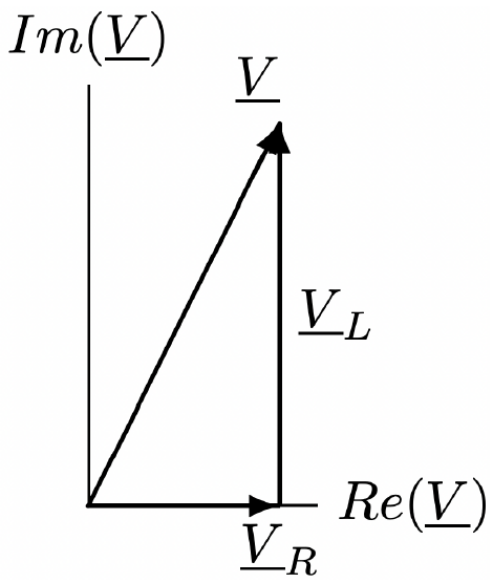

Figure 12: Components of Voltage

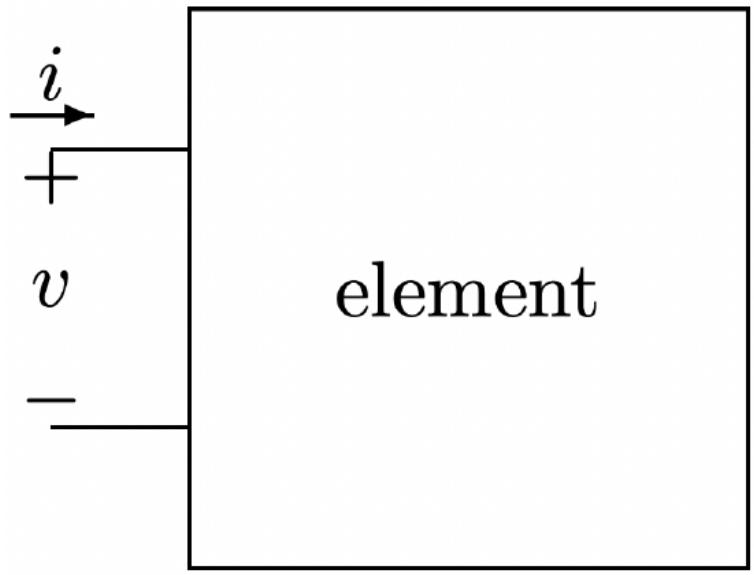

Figure 13: Definition for Power

- $$p = iL\frac{di}{dt} = \frac{1}{2}L\frac{di^2}{dt} \tag{2.7.4}$$

  The quantity $w_L = \frac{1}{2}Li^2$ may be interpreted as energy stored in the inductance, so that $p = \frac{dw_L}{dt}$. We will need to refine this definition later, when we consider electromechanical interactions or nonlinear elements, but it will do for now.

- $$p = vC\frac{dv}{dt} = \frac{1}{2}C\frac{dv^2}{dt} \tag{2.7.5}$$

  The quantity $w_C = \frac{1}{2}Cv^2$ may similarly be interpreted as energy stored in the capacitance.

  Next, consider the power input to each of these three elements under sinusoidal steady state conditions:

- Resistance: if $i = I\cos(\omega t + \theta)$, then

$$\begin{aligned} p &= RI^2\cos^2(\omega t + \theta) \\ &= \frac{RI^2}{2}[1 + \cos 2(\omega t + \theta)] \end{aligned} \tag{2.7.6}$$

  Thus, average power into the resistance is:

$$P = \frac{1}{2}RI^2 \tag{2.7.7}$$

- Inductance: if $i = I\cos(\omega t + \theta)$, then voltage is $v = -\omega LI\sin(\omega t + \theta)$, and power is:

$$\begin{aligned} p &= -\omega LI^2\cos(\omega t + \theta)\sin(\omega t + \theta) \\ &= -\frac{\omega LI^2}{2}\sin 2(\omega t + \theta) \end{aligned} \tag{2.7.8}$$

  Average power into the inductance is zero. Instantaneous energy stored in the inductance is

  $w_L = \frac{1}{2}LI^2\cos^2(\omega t + \theta)$

  and that has an average value:

  \[\ =\frac{1}{4} L I^{2}\label{53} \]

- $$p = -\frac{\omega CV^2}{2}\sin 2(\omega t + \phi) \tag{2.7.9}$$

which has zero time average. Energy stored in the capacitance is:

$$w_C = \frac{1}{2} C V^2 \cos^2(\omega t + \phi)$$

which has time average:

\[\ =\frac{1}{4} C V^{2}\label{55} \]

Now, consider power flow into a set of terminals in a situation in which both voltage and current are sinusoidal and have the same frequency, but possibly different phase angles:

$$\begin{aligned} v(t) &= V \cos(\omega t + \phi) \\ i(t) &= I \sin(\omega t + \theta) \end{aligned}$$

It is necessary to revert to the original form of complex notation, as in equation 19, to compute power.

$$v(t) = \frac{1}{2}\left[\underline{V} e^{j\omega t} + \underline{V}^* e^{-j\omega t}\right] \tag{2.7.10}$$

$$i(t) = \frac{1}{2}\left[\underline{I} e^{j\omega t} + \underline{I}^* e^{-j\omega t}\right] \tag{2.7.11}$$

Instantaneous power is the product of voltage and current:

$$p = \frac{1}{4}\left[\underline{V}\underline{I}^* + \underline{V}^*\underline{I} + \underline{V}\underline{I} e^{j2\omega t} + \underline{V}^*\underline{I}^* e^{-j2\omega t}\right] \tag{2.7.12}$$

This is directly equivalent to:

$$p = \frac{1}{2} Re\left[\underline{V}\underline{I}^* + \underline{V}\underline{I} e^{j2\omega t}\right] \tag{2.7.13}$$

This is, in turn, expressible as:

$$p = \frac{1}{2}|\underline{V}||\underline{I}|[\cos(\phi - \theta) + \cos(2\omega t + \phi + \theta)] \tag{2.7.14}$$

From this, we extract “real power”, or time- average power:

$$P = \frac{1}{2}\mathrm{Re}\left[\underline{V}\underline{I}^*\right] = \frac{1}{2}|\underline{V}||\underline{I}| \cos(\phi - \theta) \tag{2.7.15}$$

The ratio between real power and apparent power $P_a = \frac{1}{2}|\underline{V}||\underline{I}|$ is called the power factor, and is simply:

$$\text{power factor } = \cos\psi = \cos(\phi - \theta) \tag{2.7.16}$$

The power factor angle $\psi = \phi - \theta$ is the relative phase shift between voltage and current.

This expression for time- average power suggests a definition for something we might call complex power:

$$P + jQ = \frac{1}{2}\underline{V}\underline{I}^* \tag{2.7.17}$$

in which average power P is the real part. The magnitude of this complex quantity is the apparent power. The imaginary part is called reactive power. It has importance which will be discussed later.

Different units are used for real, reactive and apparent power, in order to gain some distinction between quantities. Usually we will express real power in watts (**W**) (or kW, MW,...). Apparent power is expressed in volt-amperes (**VA**), and reactive power is expressed in volt-amperes-reactive (**VAR’s**).

To obtain some more feeling for reactive power, expand the time- varying part of the expression for instantaneous power:

$$p_{\text{varying}} = \frac{1}{2}|\underline{V}||\underline{I}| \cos(2\omega t + \phi + \theta)$$

Now, using the trig identity $\cos(x+y) = \cos x \cos y - \sin x \sin y$, and assigning $x = 2\omega t + 2\phi$ and $y = -\psi = \theta - \phi$, we have:

$$p_{\text{varying}} = \tfrac{1}{2}|\underline{V}||\underline{I}|[\cos 2(\omega t + \phi) + \sin\psi \sin 2(\omega t + \phi)]$$

Thus, total instantaneous power is:

$$p = \frac{1}{2}\left|\underline{V}\right|\left|\underline{I}\right|\cos\psi[1 + \cos 2(\omega t + \phi)] + \frac{1}{2}\left|\underline{V}\right|\left|\underline{I}\right|\sin\psi \sin 2(\omega t + \phi) \tag{2.7.18}$$

Now, if we note expressions for P and Q, we can re-write this as:

$$p = P[1 + \cos 2(\omega t + \phi)] + Q \sin 2(\omega t + \phi) \tag{2.7.19}$$

Thus, real power P represents not only time average power but also the pulsations that go with time average power. Reactive power Q represents energy exchange with zero average value.

RMS Amplitude

Note that, in all of the expressions for power used so far, a factor of $\frac{1}{2}$ appears. This is, of course, because the average value of the product of two sinusoids of the same frequency has a value of half of the products of their peak amplitudes multiplied by the cosine of the relative phase angle. It has become common to use a different measure of voltage amplitude, which is called root-mean-square or simply RMS. The proper definition for the RMS value of a waveform is somewhat complex, but boils down to that value which, if it were DC, would dissipate the same power in a resistor. It is possible to define RMS for any periodic waveform. However, since we will be dealing with sinusoids, the definition is even easier. Clearly, since power dissipated in a resistor is, in terms of peak amplitudes:

$$P = \tfrac{1}{2}\tfrac{|\underline{V}|^2}{R}$$

then the RMS amplitude must be:

$$V_{RMS} = \frac{|\underline{V}|}{\sqrt{2}} \tag{2.7.20}$$

Then,

$$P = \tfrac{V_{RMS}^2}{R}$$

As we will see, RMS amplitudes are the default for most situations: when a circuit is described as "120 Volts AC", the designation virtually always means 120 Volts, RMS. The peak amplitude of this is $|\underline{V}| = \sqrt{2} \cdot 120 \approx 170$ volts. Often you will see sinusoidal waveforms expressed in the form:

$$v = \sqrt{2} V_{RMS} \cos(\omega t)$$

in which V_{RMS} is obviously the RMS amplitude

Example

Consider the simple network of Figure 14. We will calculate the instantaneous power flow into that network in terms we have been discussing. Assume that the voltage source has RMS amplitude

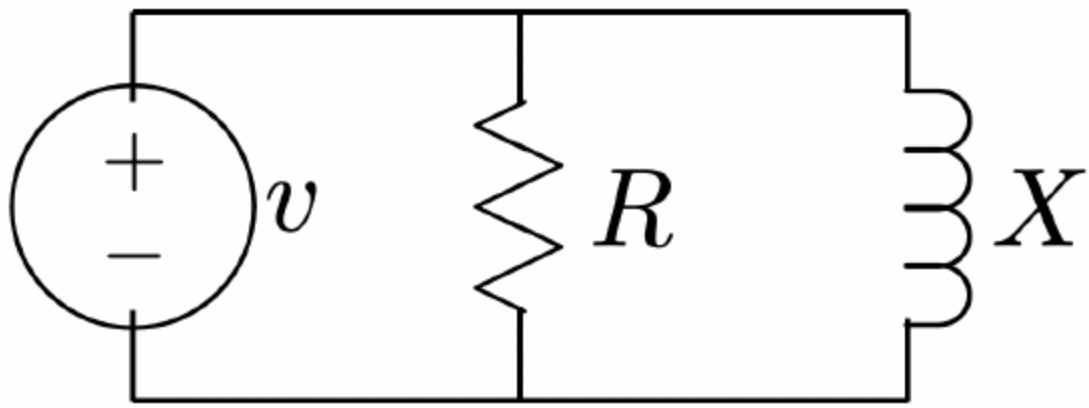

Figure 14: Example Circuit

of 120 volts and R and X are both 100 Ω. Then:

$$v(t) = 170 \cos \omega t$$

The admittance of this network is:

$$Y = \frac{1}{100} - \frac{j}{100}$$

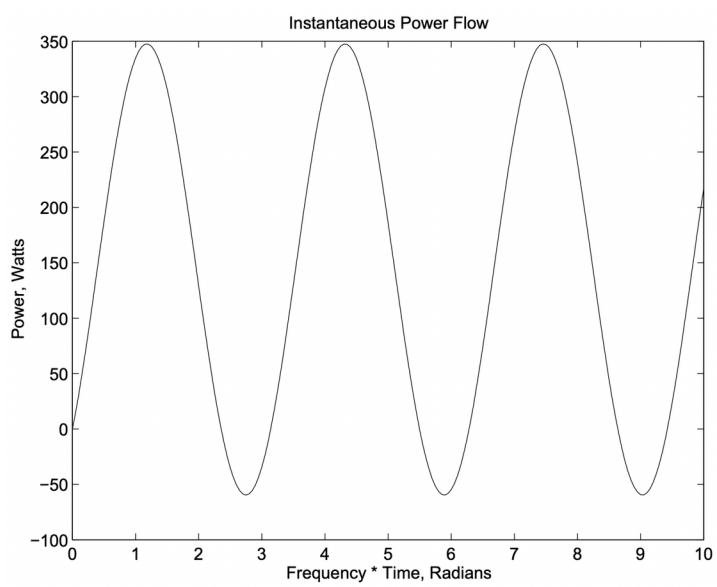

Figure 15: Power Flow For Example Circuit

so that the complex amplitude of current is:

$$I = 1.7 - j1.7$$

And then complex power is:

$$P + jQ = \frac{1}{2} 170(1.7 + j1.7)$$

Real and reactive power are, respectively: $P = 144 \text{ W}$, $Q = 144\text{VAR}$. This gives a power factor angle of $\psi = \arctan(1) = 45^\circ$. Then, instantaneous power is:

$$p = 144 \left[1 + \cos 2 \left(\omega t - 45^\circ\right)\right] + 144 \sin 2 \left(\omega t - 45^\circ\right)$$

This is illustrated in Figure 15.

This page titled 2.7: Energy and Power is shared under a CC BY-NC-SA 4.0 license and was authored, remixed, and/or curated by James Kirtley (MIT OpenCourseWare) via source content that was edited to the style and standards of the LibreTexts platform.

2.8: A Conservation Law

It is possible to show that complex power is conserved in the same way as we expect time average power to be conserved. Consider a network with a collection of terminals and with a collection of internal branches. Instantaneous power flow into the network is:

$$p_{in} = \sum_{\text{terminals}} vi$$

Note that this expression holds for voltage and current expressed over any complete set of terminals. That is, if it is possible to delineate the terminals of the network into a set of pairs, the voltages might correspond to voltages across the pair, while currents would flow between the terminals of each pair. Alternatively, the voltages might correspond to single node-to-datum voltage, while currents would then be single input node currents. Since power can go only into network elements, it follows that the sum of internal branch powers must be equal to the sum of terminal powers:

$$\sum_{\text{terminals}} vi = \sum_{\text{branches}} vi \tag{2.8.1}$$

If this is true for instantaneous power, it is also true for complex power:

$$\sum_{\text{terminals}} \underline{VI} = \sum_{\text{branches}} \underline{VI} \tag{2.8.2}$$

Now, if the network is made up of resistances, capacitances and inductances,

$$\sum_{\text{terminals}} \underline{VI} = \sum_{\text{resistances}} \underline{VI} + \sum_{\text{inductances}} \underline{VI} + \sum_{\text{capacitances}} \underline{VI} \tag{2.8.3}$$

For these individual elements:

- Resistances: $\underline{VI}^* = R|\underline{I}|^2$
- Inductances: $\underline{VI}^* = j\omega L|\underline{I}|^2$
- Capacitances: $\underline{VI}^* = -j\omega C|\underline{V}|^2$

Then equation 69 becomes:

$$\sum_{\text{terminals}} \underline{VI} = \sum_{\text{resistances}} R|\underline{I}|^2 + j \sum_{\text{inductances}} \omega L|\underline{I}|^2 - j \sum_{\text{capacitances}} \omega C|\underline{V}|^2 \tag{2.8.4}$$

Then, identifying individual terms:

$$\sum_{\text{terminals}} \underline{VI} = 2(P + jQ) \qquad \text{Total Complex Power into Network}$$

\(\ \sum_{\text {resistances }} R|\underline{I}|^{2}=2 \sum\quad \text { Power Dissipated in Resistors }\)

\(\ j \sum_{\text {inductances }} \omega L|\underline{I}|^{2}=4 \omega \sum\text { Energy Stored in Inductances }\)

\(\ j \sum_{\text {capacitances }} \omega C|\underline{V}|^{2}=4 \omega \sum\text { Energy Stored in Capacitances }\)

So, for any RLC network:

\[\ P+j Q=\sum_{\text {resistors }}+2 j \omega\left[\sum_{\text {inductors }}-\sum_{\text {capacitors }}\right]\label{71} \]

This page titled 2.8: A Conservation Law is shared under a CC BY-NC-SA 4.0 license and was authored, remixed, and/or curated by James Kirtley (MIT OpenCourseWare) via source content that was edited to the style and standards of the LibreTexts platform.

2.9: Power Flow Through An Impedance

Consider the situation shown in Figure 16. This actually represents a number of important situations in power systems, where the impedance $\underline{Z}$ might represent a transmission line, transformer or motor winding. Of interest to us is the flow of power through the impedance. Current is given

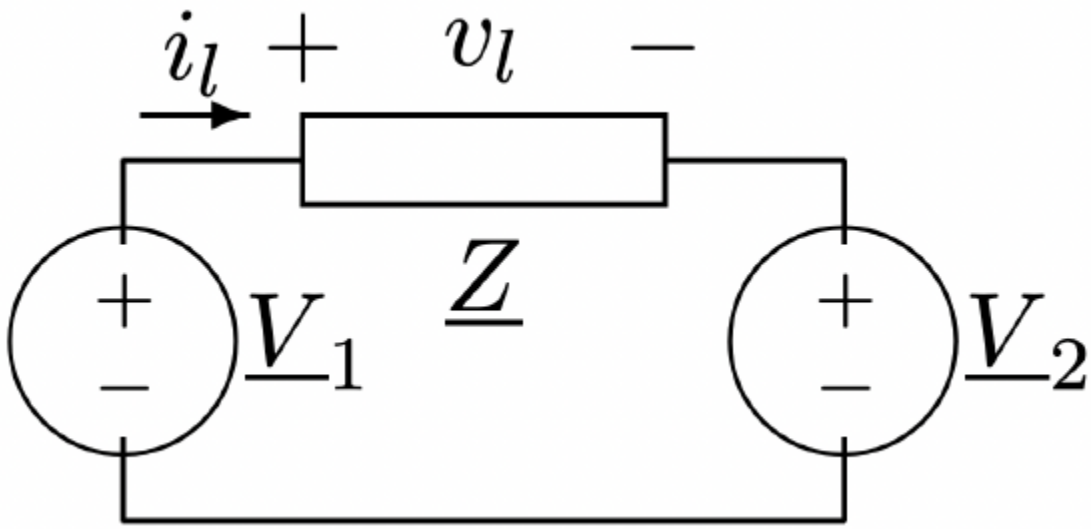

Figure 16: Power Flow Example

by:

$$\underline{i_l} = \frac{\underline{V}_1 - \underline{V}_2}{\underline{Z}} \tag{2.9.1}$$

Then, complex power flow out of the left- hand voltage source is:

$$P + jQ = \frac{1}{2}\underline{V}_1 \left(\frac{\underline{V}_1^* - \underline{V}_2^*}{\underline{Z}^*} \right) \tag{2.9.2}$$

Now, the complex amplitudes may be expressed as:

$$\underline{V}_1 = \left|\underline{V}_1\right| e^{j\theta} \tag{2.9.3}$$

$$\underline{V}_2 = \left|\underline{V}_2\right| e^{j\theta+\delta} \tag{2.9.4}$$

where δ is the relative phase angle between the two voltage sources. Complex power at the terminals of the voltage source $\underline{V}_1$ is now given by:

$$P + jQ = \frac{\left|\underline{V}_1\right|^2}{2\underline{Z}^*} - \frac{\left|\underline{V}_1\right| \left|\underline{V}_2\right| e^{-j\delta}}{2\underline{Z}^*} \tag{2.9.5}$$

This is describable as a circle in the complex plane, with its origin at

$$\frac{\left|\underline{V}_1\right|^2}{2\underline{Z}^*}$$

and its radius equal to:

$$\frac{\left|\underline{V}_1\right|\left|\underline{V}_2\right|}{2\left|\underline{Z}\right|}$$

Now suppose the impedance through which we are passing power is describable as a simple inductance as shown in Figure 17. This is perhaps the simplest of transmission line models which represents only the inductive impedance of the line. Line inductance arises because currents in the line produce magnetic fields, and this is a fair model for most lines which are fairly 'short'. More on that in the next section. This line has the impedance

$$Z = j\omega L = jX_L$$

Now, switching to RMS amplitudes, so that $\underline{V}_s = \sqrt{2}\underline{V}_1$ and $\underline{V}_r = \sqrt{2}\underline{V}_2$, Then real and reactive power flow are:

$$P_s + jQ_s = \underline{V}_s\underline{I}^* = j\frac{|V_s|^2 - \underline{V}_s\underline{V}_r^*}{X_l}$$
$$P_r + jQ_r = -\underline{V}_r\underline{I}^* = j\frac{|V_r|^2 - \underline{V}_s^*\underline{V}_r}{X_l}$$

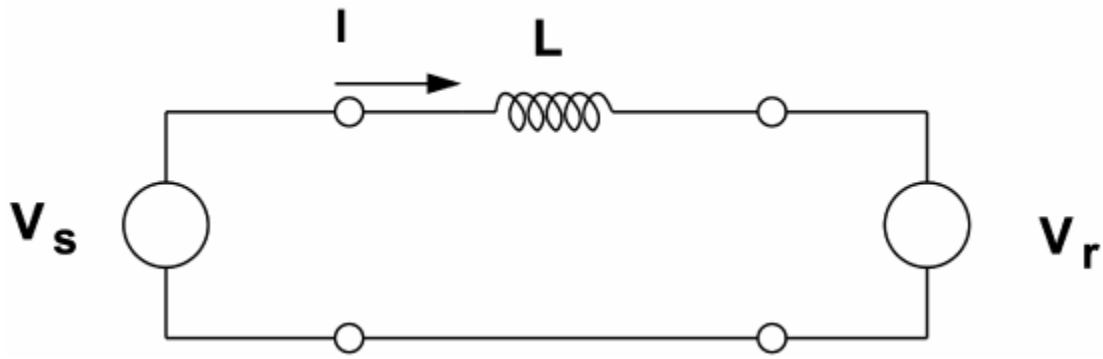

Figure 17: Simplest Transmission Line Model

Now if we assume that the voltages are of the form:

$$\underline{V}_s = V_s e^{j\phi}$$
$$\underline{V}_r = V_r e^{j\theta}$$

and that the relative phase angle between them is $\phi - \theta = \delta$ and doing a little trig:

$$P_s = \frac{V_s V_r \sin\delta}{X_L}$$
$$Q_s = \frac{V_s^2 - V_s V_r \cos\delta}{X_L}$$
$$P_r = -\frac{V_s V_r \sin\delta}{X_L}$$
$$Q_r = \frac{V_r^2 - V_s V_r \cos\delta}{X_L}$$

A picture of this locus is referred to as a power circle diagram, because of its shape. Figure 18 shows the construction of a sending end power circle diagram for equal sending-end and receivingend voltages and a purely reactive impedance.

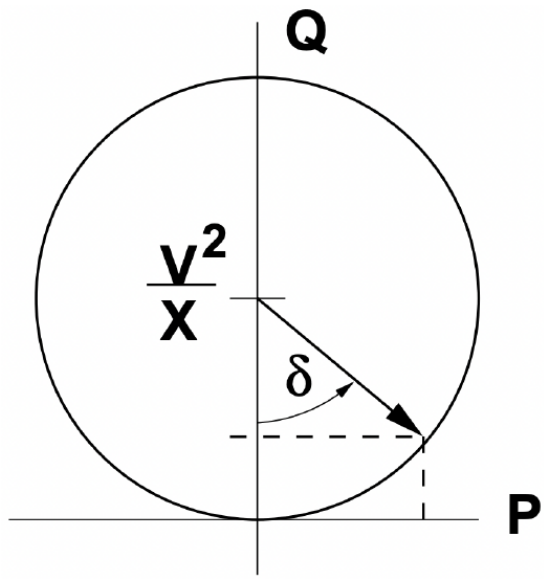

Figure 18: Power Circle, Equal Voltages

As a check, consider the reactive power consumed by the line itself: we expect that $Q_s + Q_r = Q_L$, and so:

$$Q_s + Q_r = \frac{V_s^2 + V_r^2 - 2V_sV_r\cos\delta}{X_L}$$

Note that the voltage across the line element itself is found using the law of cosines (see Figure 19:

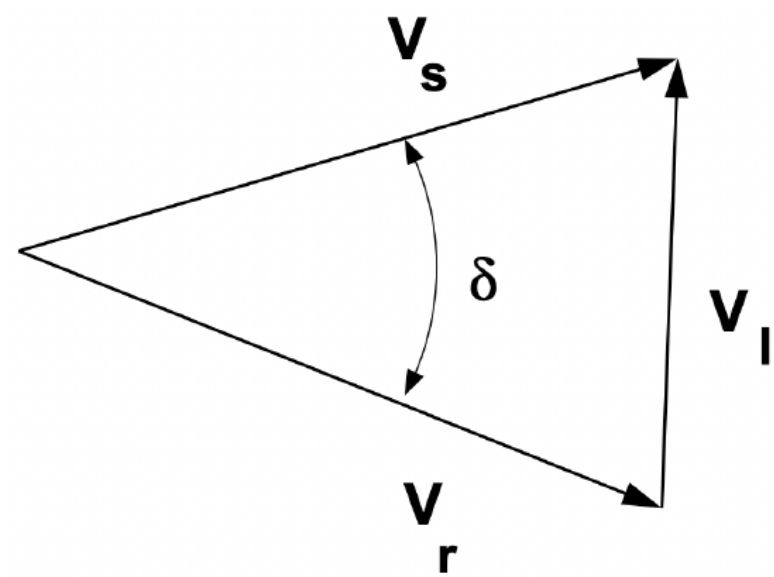

Figure 19: Illustration of the Law of Cosines

$$V_L^2 = V_s^2 + V_r^2 - 2V_sV_r\cos\delta$$

and, indeed,

$$Q_L = \frac{V_L^2}{X_L}$$

This page titled 2.9: Power Flow Through An Impedance is shared under a CC BY-NC-SA 4.0 license and was authored, remixed, and/or curated by James Kirtley (MIT OpenCourseWare) via source content that was edited to the style and standards of the LibreTexts platform.

2.10: Compensated Line

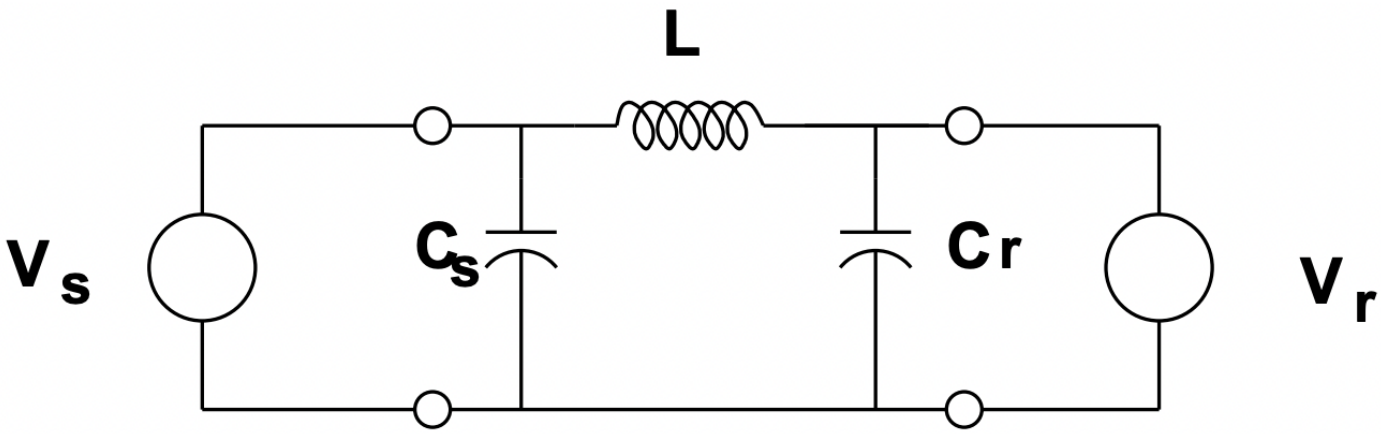

Figure 20: Transmission Line Model

Perhaps a more commonly used model for a transmission line is as shown in Figure 20. This represents not only the fact that most transmission lines have, in addition to series inductance, parallel capacitance but also the fact that many transmission lines are shunt compensated. This may be represented as a two-port network with the admittance parameters, using $X_L = j\omega L$ and $X_C = \frac{-j}{\omega C}$,:

$$\begin{aligned}
\underline{Y}_{ss} &= \frac{1}{jX_L} - \frac{1}{jX_{C1}} \\
\underline{Y}_{sr} = \underline{Y}_{rs} &= \frac{1}{jX_L} \\
\underline{Y}_{rr} &= \frac{1}{jX_L} - \frac{1}{jX_{C2}}
\end{aligned}$$

It is fairly clear that, for voltage sources at both ends, real and reactive power flow are:

$$\begin{aligned}
P_s &= \frac{V_s V_r \sin\delta}{X_L} \\
Q_s &= V_s^2 \left(\frac{1}{X_L} - \frac{1}{X_{C1}}\right) - \frac{V_s V_r \cos\delta}{X_L} \\
P_r &= -\frac{V_s V_r \sin\delta}{X_L} \\
Q_r &= V_s^2 \left(\frac{1}{X_L} - \frac{1}{X_{C2}}\right) - \frac{V_s V_r \cos\delta}{X_L}
\end{aligned}$$

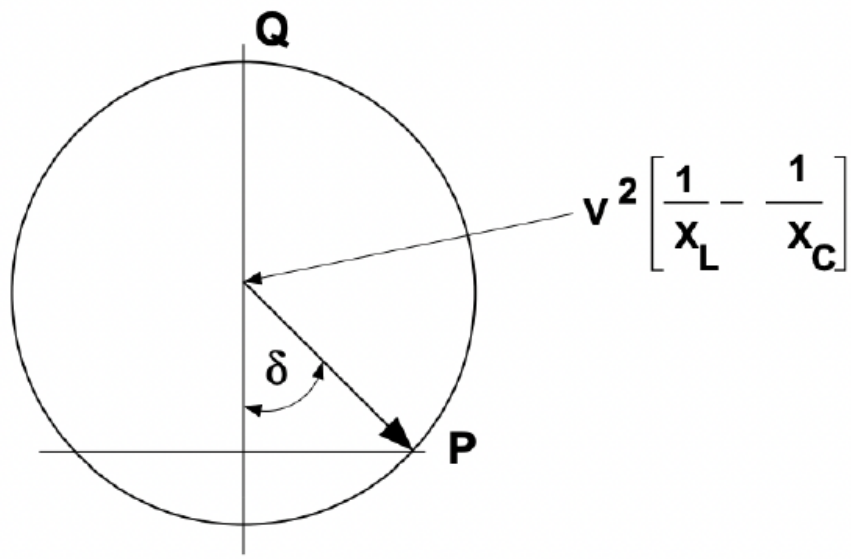

Figure 21: Power Circle, Equal Voltages, Compensation Offset

The power circle for this sort of line is similar to that of the simpler model, but the center is offset to smaller reactive component, as shown in Figure 21.

An interesting feature of transmission lines is illustrated by what might happen were the receiving line to be open: in that case:

$$\underline{V}_r = \underline{V}_s \frac{1}{1-\omega^2 LC}$$

Depending on the values of frequency, inductance and capacitance this could be arbitrarily large, and this is a potential problem, particularly for longer lines, as we will discuss in the next section.

This page titled 2.10: Compensated Line is shared under a CC BY-NC-SA 4.0 license and was authored, remixed, and/or curated by James Kirtley (MIT OpenCourseWare) via source content that was edited to the style and standards of the LibreTexts platform.

3: POLYPHASE NETWORKS

Most electric power applications employ three phases. That is, three separate power carrying circuits, with voltages and currents staggered symmetrically in time are used. Two major reasons for the use of three phase power are economical use of conductors and nearly constant power flow.

Systems with more than one phase are generally termed polyphase. Three phase systems are the most common, but there are situations in which a different number of phases may be used. Two phase systems have a simplicity that makes them useful for teaching vehicles and for certain servomechanisms. This is why two phase machines show up in laboratories and textbooks. Systems with a relatively large number of phases are used for certain specialized applications such as controlled rectifiers for aluminum smelters. Six phase systems have been proposed for very high power transmission applications.

Polyphase systems are qualitatively different from single phase systems. In some sense, polyphase systems are more complex, but often much easier to analyze. This little paradox will become obvious during the discussion of electric machines. It is interesting to note that physical conversion between polyphase systems of different phase number is always possible.

This chapter starts with an elementary discussion of polyphase networks and demonstrates some of their basic features. It ends with a short discussion of per-unit systems and power system representation.

3.1: Two Phases

3.2: Three Phase Systems

3.3: Line-Line Voltages

3.4: Transformers

3.5: Three-Phase Transformers

3.6: Polyphase Lines and Single-Phase Equivalents

3.7: Introduction To Per-Unit Systems

This page titled 3: Polyphase Networks is shared under a CC BY-NC-SA 4.0 license and was authored, remixed, and/or curated by James Kirtley (MIT OpenCourseWare) via source content that was edited to the style and standards of the LibreTexts platform.

3.1: Two Phases

The two-phase system is the simplest of all polyphase systems to describe. Consider a pair of voltage sources sitting side by side with:

$$v_1 = V\cos\omega t \tag{3.1.1}$$

$$v_2 = V\sin\omega t$$

Suppose this system of sources is connected to al “balanced load”, as shown in Figure 1. To compute the power flows in the system, it is convenient to re-write the voltages in complex form:

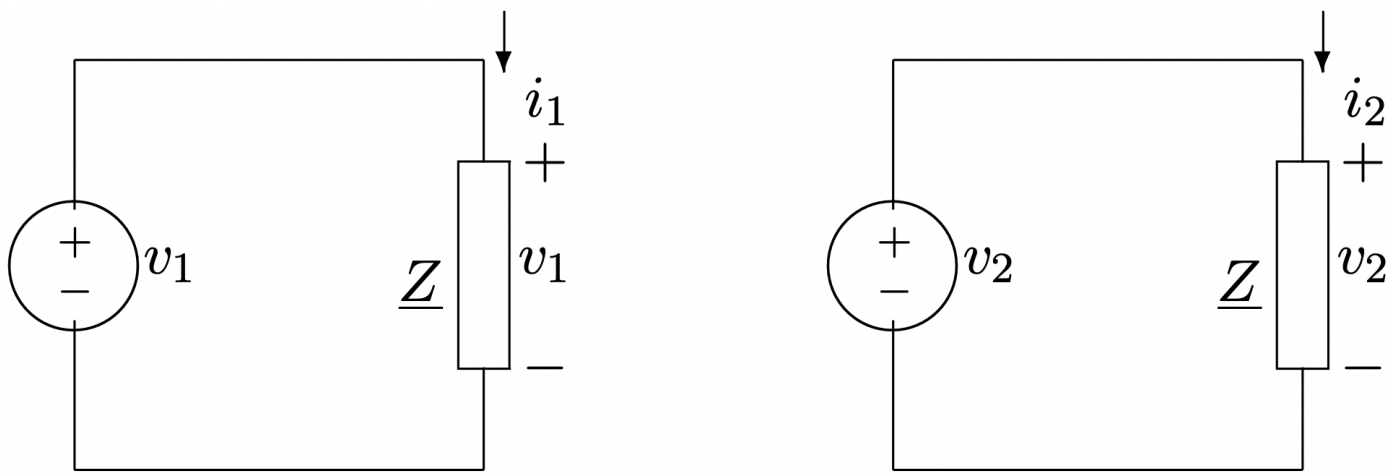

Figure 1: Two-Phase System

$$v_1 = Re\left[\underline{V}e^{j\omega t}\right]$$

$$v_2 = Re\left[-j\underline{V}e^{j\omega t}\right]$$

$$= Re\left[\underline{V}e^{j(\omega t-\frac{\pi}{2})}\right]$$

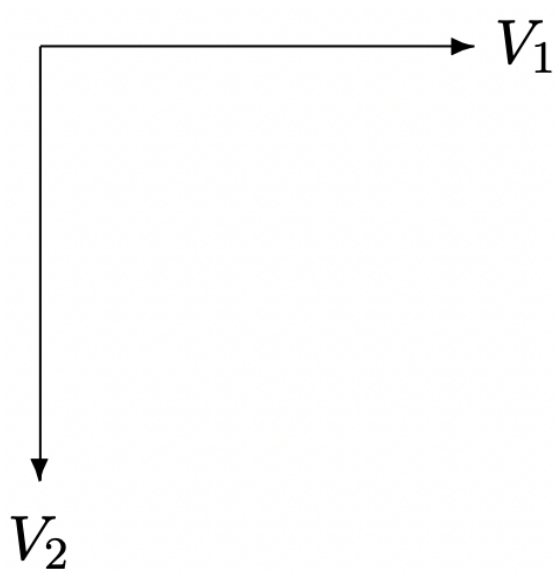

Figure 2: Phasor Diagram for Two-Phase Source

If each source is connected to a load with impedance:

$$\underline{Z} = |\underline{Z}|e^{j\psi}$$

then the complex amplitudes of currents are:

$$\underline{I}_1 = \frac{V}{|\underline{Z}|}e^{-j\psi}$$
$$\underline{I}_2 = \frac{V}{|\underline{Z}|}e^{-j\psi}e^{-j\frac{\pi}{2}}$$

Each of the two phase networks has the same value for real and reactive power:

$$P + jQ = \frac{|V|^2}{2|\underline{Z}|}e^{j\psi}$$

or:

$$P = \frac{|V|^2}{2|\underline{Z}|}\cos\psi$$

$$Q = \frac{|V|^2}{2|\underline{Z}|}\sin\psi$$

The relationship between "complex power" and instantaneous power flow was worked out in Chapter 2 of these notes. For a system with voltage of the form:

$$v = Re\left[Ve^{j\phi}e^{j\omega t}\right]$$

instantaneous power is given by:

$$p = P[1 + \cos 2(\omega t + \phi)] + Q\sin 2(\omega t + \phi)$$

For the case under consideration here, $\phi = 0$ for phase 1 and $\phi = -\frac{\pi}{2}$ for phase 2. Thus:

$$p_1 = \frac{|V|^2}{2|\underline{Z}|}\cos\psi[1 + \cos 2\omega t] + \frac{|V|^2}{2|\underline{Z}|}\sin\psi\sin 2\omega t$$
$$p_2 = \frac{|V|^2}{2|\underline{Z}|}\cos\psi[1 + \cos(2\omega t - \pi)] + \frac{|V|^2}{2|\underline{Z}|}\sin\psi\sin(2\omega t - \pi)$$

Note that the time-varying parts of these two expressions have opposite signs. Added together, they give instantaneous power:

$$p = p_1 + p_2 = \frac{|V|^2}{|\underline{Z}|}\cos\psi$$

At least one of the advantages of polyphase power networks is now apparent. The use of a balanced polyphase system avoids the power flow pulsations due to ac voltage and current, and even the pulsations due to reactive energy flow. This has obvious benefits when dealing with motors and generators or, in fact, any type of source or load which would like to see constant power.

This page titled 3.1: Two Phases is shared under a CC BY-NC-SA 4.0 license and was authored, remixed, and/or curated by James Kirtley (MIT OpenCourseWare) via source content that was edited to the style and standards of the LibreTexts platform.

3.2: Three Phase Systems

Now consider the arrangement of three voltage sources illustrated in Figure 3.

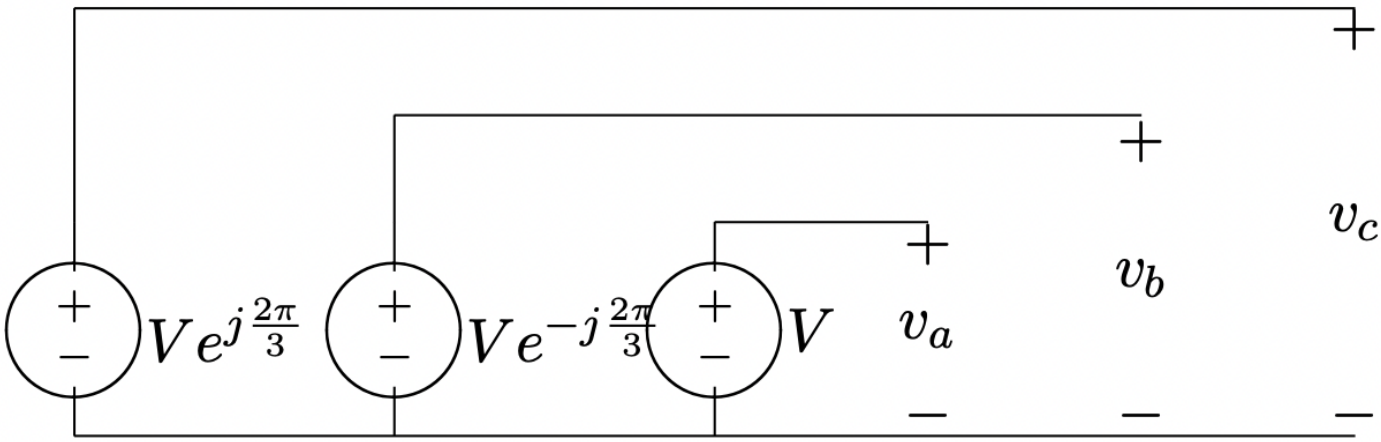

Figure 3: Three- Phase Voltage Source

The three phase voltages are:

$$v_a = \quad V\cos\omega t \quad = Re\left[Ve^{j\omega t}\right] \tag{3.2.1}$$

$$v_b = V\cos\left(\omega t - \frac{2\pi}{3}\right) = Re\left[Ve^{j(\omega t - \frac{2\pi}{3})}\right] \tag{3.2.2}$$

$$v_c = V\cos\left(\omega t + \frac{2\pi}{3}\right) = \mathrm{Re}\left[Ve^{j(\omega t + \frac{2\pi}{3})}\right] \tag{3.2.3}$$

These three phase voltages are illustrated in the time domain in Figure 4 and as complex phasors in Figure 5. Note the symmetrical spacing in time of the voltages. As in earlier examples, the instantaneous voltages may be visualized by imagining Figure 5 spinning counterclockwise with angular velocity ω. The instantaneous voltages are just projections of the vectors of this "pinwheel" onto the horizontal axis.

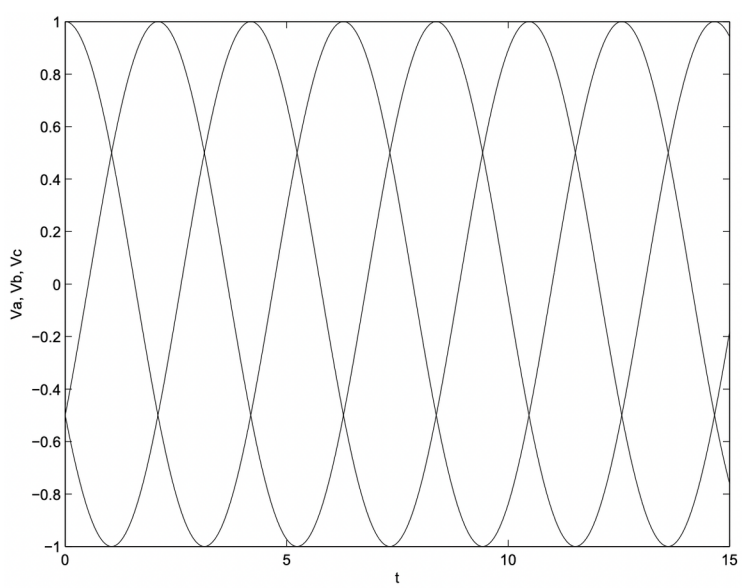

Figure 4: Three Phase Voltages

Consider connecting these three voltage sources to three identical loads, each with complex impedance $\underline{Z}$, as shown in Figure 6.

If voltages are as given by (9 - 11), then currents in the three phases are:

$$i_a = Re\left[\frac{\underline{V}}{\underline{Z}}e^{j\omega t}\right] \tag{3.2.4}$$

$$i_b = \mathrm{Re}\left[\frac{\underline{V}}{\underline{Z}}e^{j(\omega t - \frac{2\pi}{3})}\right] \tag{3.2.5}$$

$$i_c = Re\left[\frac{\underline{V}}{\underline{Z}}e^{j(\omega t + \frac{2\pi}{3})}\right] \tag{3.2.6}$$

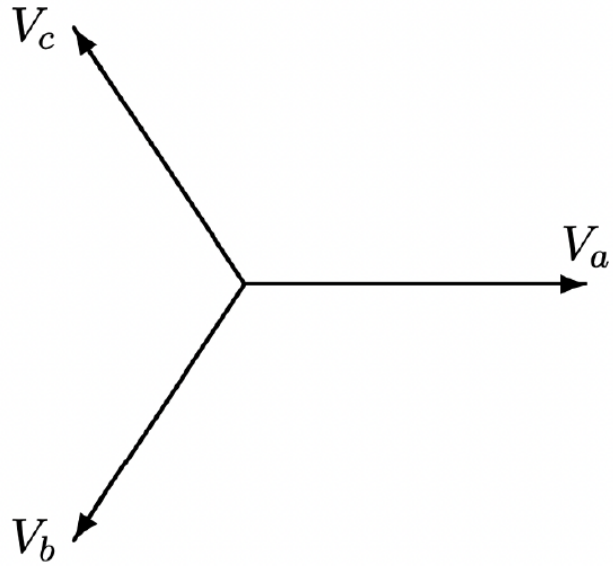

Figure 5: Phasor Diagram: Three Phase Voltages

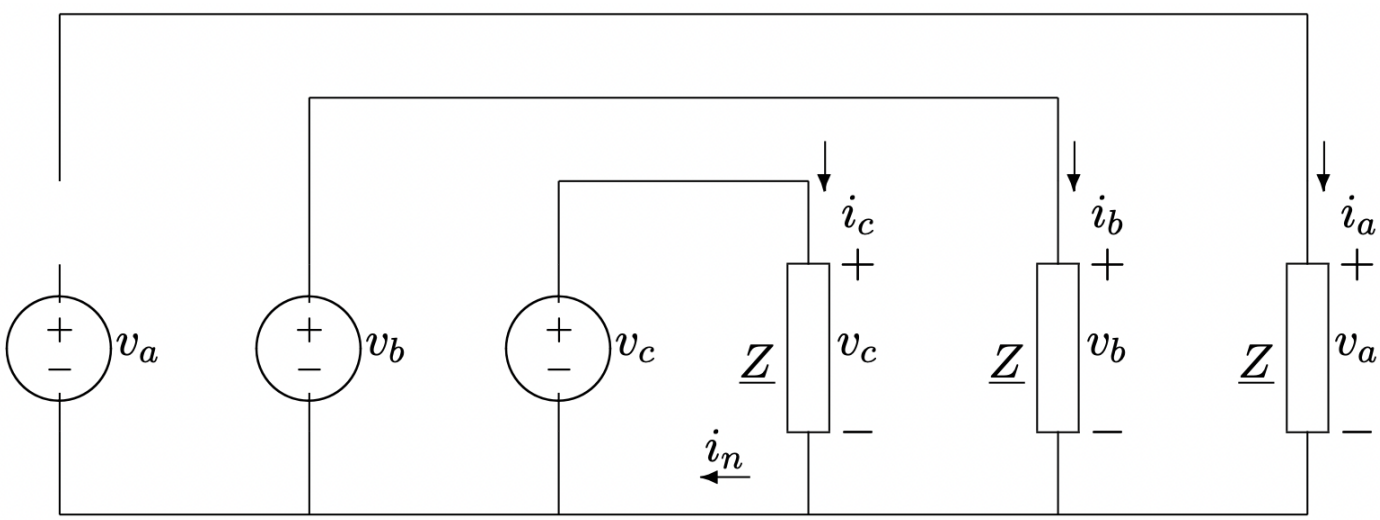

Figure 6: Three- Phase Source Connected To Balanced Load

Complex power in each of the three phases is:

$$P + jQ = \frac{|\underline{V}|^2}{2|\underline{Z}|}(\cos\psi + j\sin\psi) \tag{3.2.7}$$

Then, remembering the time phase of the three sources, it is possible to write the values of instantaneous power in the three

phases:

$$p_a = \frac{|\underline{V}|^2}{2|\underline{Z}|}\{\cos\psi[1+\cos 2\omega t] + \sin\psi \sin 2\omega t\} \tag{3.2.8}$$

$$p_b = \frac{|\underline{V}|^2}{2|\underline{Z}|}\left\{\cos\psi\left[1+\cos\left(2\omega t - \frac{2\pi}{3}\right)\right] + \sin\psi\sin\left(2\omega t - \frac{2\pi}{3}\right)\right\} \tag{3.2.9}$$

$$p_c = \frac{|\underline{V}|^2}{2|\underline{Z}|}\left\{\cos\psi\left[1+\cos\left(2\omega t + \frac{2\pi}{3}\right)\right] + \sin\psi\sin\left(2\omega t + \frac{2\pi}{3}\right)\right\} \tag{3.2.10}$$

The sum of these three expressions is total instantaneous power, which is constant:

$$p = p_a + p_b + p_c = \frac{3}{2}\frac{|\underline{V}|^2}{|\underline{Z}|}\cos\psi \tag{3.2.11}$$

It is useful, in dealing with three phase systems, to remember that

$$\cos x + \cos\left(x - \tfrac{2\pi}{3}\right) + \cos\left(x + \tfrac{2\pi}{3}\right) = 0$$

regardless of the value of x.

Now consider the current in the neutral wire, i_n in Figure 6. This current is given by:

$$i_n = i_a + i_b + i_c = Re\left[\frac{\underline{V}}{\underline{Z}}\left(e^{j\omega t} + e^{j\left(\omega t - \frac{2\pi}{3}\right)} + e^{j\left(\omega t + \frac{2\pi}{3}\right)}\right)\right] = 0 \tag{3.2.12}$$

This shows the most important advantage of three-phase systems over two-phase systems: a wire with no current in it does not have to be very large. In fact, the neutral connection may be eliminated completely in many cases. The network shown in Figure 7 will work as well as the network in Figure 6 in most cases in which the voltages and load impedances are balanced.

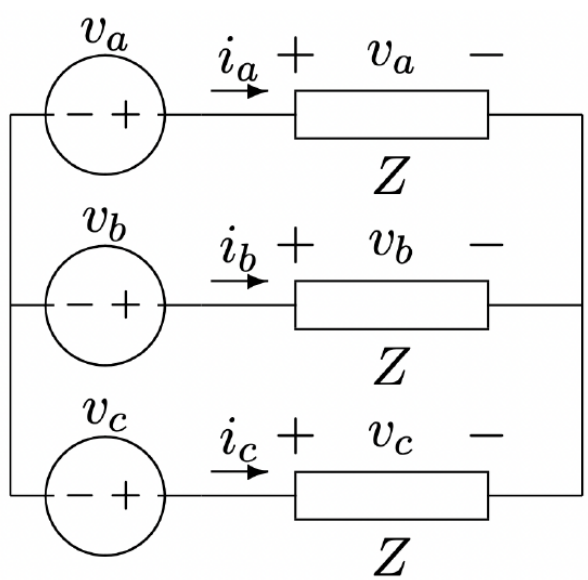

Figure 7: Ungrounded Three-Phase Source and Load

There is a fundamental difference between grounded and undgrounded systems if perfectly balanced conditions are not maintained. In effect, the ground wire provides isolation between the phases by fixing the neutral voltage a the star point to be zero. If the load impedances are not equal the load is said to be unbalanced. If the system is grounded there will be current in the neutral. If an unbalanced load is not grounded, the star point voltage will not be zero, and the voltages will be different in the three phases at the load, even if the voltage sources all have the same magnitude.

This page titled 3.2: Three Phase Systems is shared under a CC BY-NC-SA 4.0 license and was authored, remixed, and/or curated by James Kirtley (MIT OpenCourseWare) via source content that was edited to the style and standards of the LibreTexts platform.

3.3: Line-Line Voltages

A balanced three-phase set of voltages has a well defined set of line-line voltages. If the line-toneutral voltages are given by (9 - 11), then line-line voltages are:

$$v_{ab} = v_a - v_b = \text{Re}\left[\underline{V}\left(1 - e^{-j\frac{2\pi}{3}}\right)e^{j\omega t}\right] \tag{3.3.1}$$

$$v_{bc} = v_b - v_c = \text{Re}\left[\underline{V}\left(e^{-j\frac{2\pi}{3}} - e^{j\frac{2\pi}{3}}\right)e^{j\omega t}\right] \tag{3.3.2}$$

$$v_{ca} = v_c - v_a = Re\left[\underline{V}\left(e^{j\frac{2\pi}{3}} - 1\right)e^{j\omega t}\right] \tag{3.3.3}$$

and these reduce to:

$$v_{ab} = \text{Re}\left[\sqrt{3}\underline{V}e^{j\frac{\pi}{6}}e^{j\omega t}\right] \tag{3.3.4}$$

$$v_{bc} = Re\left[\sqrt{3}\underline{V}e^{-j\frac{\pi}{2}}e^{j\omega t}\right] \tag{3.3.5}$$

$$v_{ca} = \text{Re}\left[\sqrt{3}\underline{V}e^{j\frac{5\pi}{6}}e^{j\omega t}\right] \tag{3.3.6}$$

The phasor relationship of line-to-neutral and line-to-line voltages is shown in Figure 8. Two things should be noted about this relationship:

- The line-to-line voltage set has a magnitude that is larger than the line-ground voltage by a factor of $\sqrt{3}$.
- Line-to-line voltages are phase shifted by 30° ahead of line-to-neutral voltages.

Clearly, line-to-line voltages themselves form a three-phase set just as do line-to-neutral voltages. Power system components (sources, transformer windings, loads, etc.) may be connected either between lines and neutral or between lines. The former connection of often called wye, the latter is called delta, for obvious reasons.

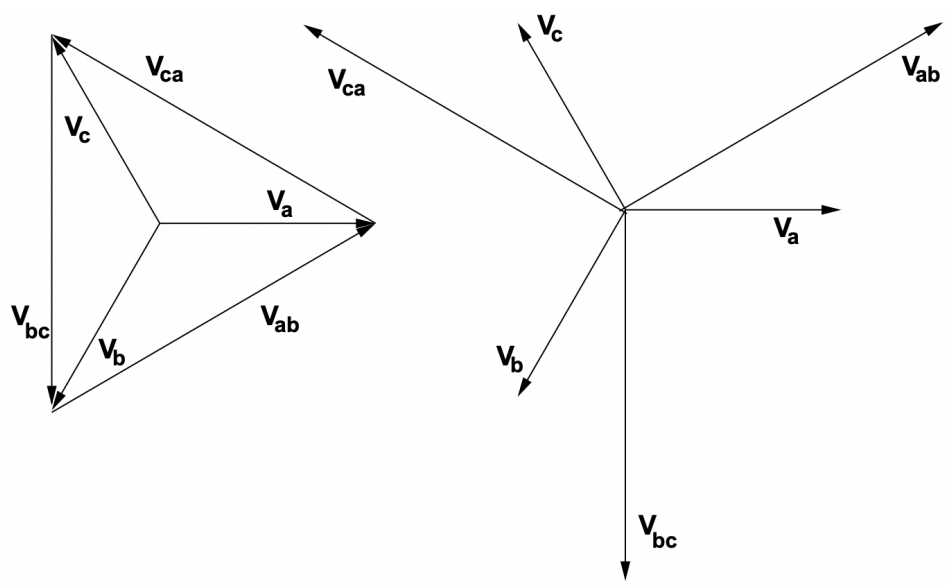

Figure 8: Line-Neutral and Line-Line Voltages

It should be noted that the wye connection is at least potentially a four-terminal connection, while the delta connection is inherently three-terminal. The difference is the availability of a neutral point. Under balanced operating conditions this is unimportant, but the difference is apparent and important under unbalanced conditions.

Example: Wye and Delta Connected Loads

Loads may be connected in either line-to-neutral or line-to-line configuration. An example of the use of this flexibility is in a fairly commonly used distribution system with a line-to-neutral voltage of 120 V, RMS. In this system the line-to-line voltage is 208 V, RMS. Single phase loads may be connected either line-to-line or line-to-neutral.

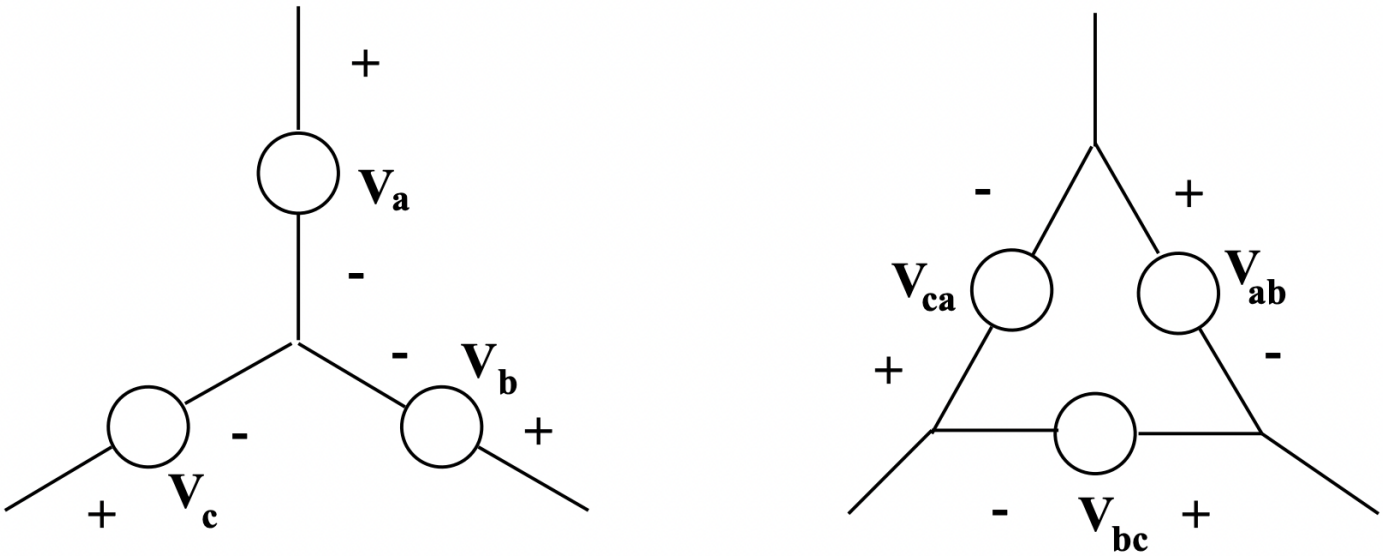

Figure 9: Wye And Delta Connected Voltage Sources

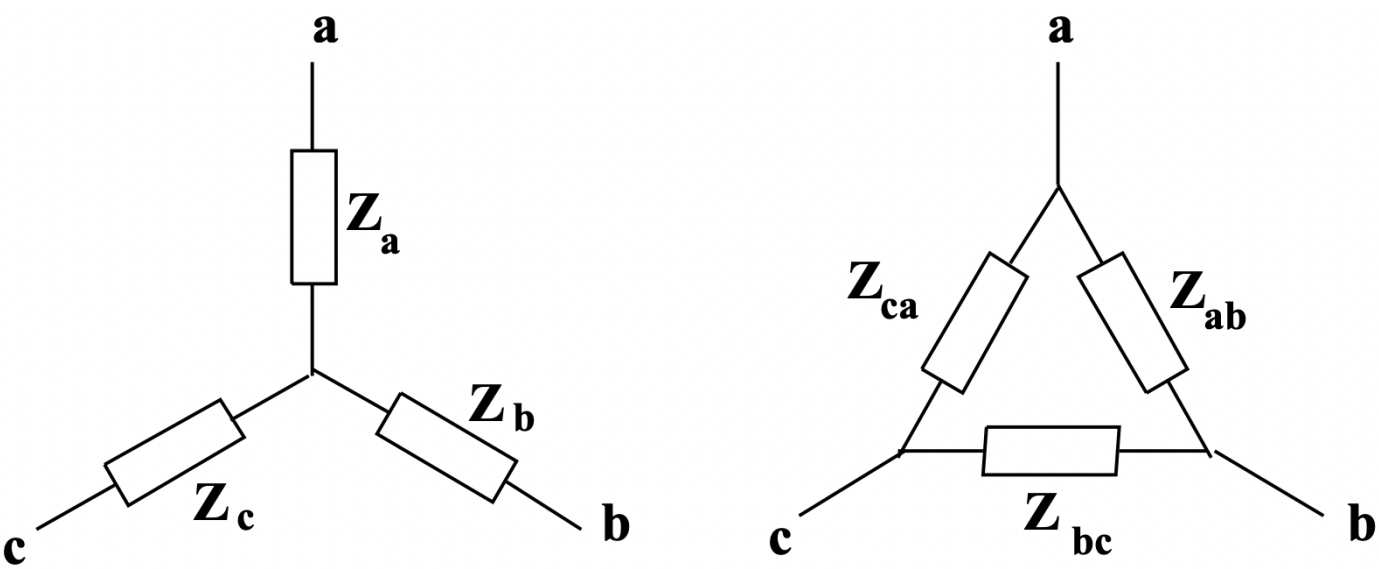

Figure 10: Wye And Delta Connected Impedances

Suppose it is necessary to build a resistive heater to deliver 6 kW, to be made of three elements which may be connected in either wye or delta. Each of the three elements must dissipate 2000 W.

Thus, since $P = \frac{V^2}{R}$, the wye connected resistors would be:

$$R_y = \frac{120^2}{2000} = 7.2\Omega$$

while the delta connected resistors would be:

$$R_\Delta = \frac{208^2}{2000} = 21.6\Omega$$

As is suggested by this example, wye and delta connected impedances are often directly equivalent. In fact, ungrounded

connections are three-terminal networks which may be represented in two ways. The two networks shown in Figure 10, combinations of three passive impedances, are directly equivalent and identical in their terminal behavior if the relationships between elements are as given in (27 - 32).

$$\underline{Z}_{ab} = \frac{\underline{Z}_a\underline{Z}_b + \underline{Z}_b\underline{Z}_c + \underline{Z}_c\underline{Z}_a}{\underline{Z}_c} \tag{3.3.7}$$

$$\underline{Z}_{bc} = \frac{\underline{Z}_a\underline{Z}_b + \underline{Z}_b\underline{Z}_c + \underline{Z}_c\underline{Z}_a}{\underline{Z}_a} \tag{3.3.8}$$

$$\underline{Z}_{ca} = \frac{\underline{Z}_a\underline{Z}_b + \underline{Z}_b\underline{Z}_c + \underline{Z}_c\underline{Z}_a}{\underline{Z}_b} \tag{3.3.9}$$

$$\underline{Z}_a = \frac{\underline{Z}_{ab}\underline{Z}_{ca}}{\underline{Z}_{ab} + \underline{Z}_{bc} + \underline{Z}_{ca}} \tag{3.3.10}$$

$$\underline{Z}_b = \frac{\underline{Z}_{ab}\underline{Z}_{bc}}{\underline{Z}_{ab} + \underline{Z}_{bc} + \underline{Z}_{ca}} \tag{3.3.11}$$

$$\underline{Z}_c = \frac{\underline{Z}_{bc}\underline{Z}_{ca}}{\underline{Z}_{ab} + \underline{Z}_{bc} + \underline{Z}_{ca}} \tag{3.3.12}$$

A special case of the wye-delta equivalence is that of balanced loads, in which:

$$\underline{Z}_a = \underline{Z}_b = \underline{Z}_c = \underline{Z}_y$$

and

$$\underline{Z}_{ab} = \underline{Z}_{bc} = \underline{Z}_{ca} = \underline{Z}_\Delta$$

in which case:

$$\underline{Z}_\Delta = 3\underline{Z}_y$$

Example: Use of Wye-Delta for Unbalanced Loads

The unbalanced load shown in Figure 11 is connected to a balanced voltage source. The problem is to determine the line currents. Note that his load is ungrounded (if it were grounded, this would be a trivial problem). The voltages are given by:

$$\begin{aligned} v_a &= V\cos\omega t \\ v_b &= V\cos\left(\omega t - \tfrac{2\pi}{3}\right) \\ v_c &= V\cos\left(\omega t + \tfrac{2\pi}{3}\right) \end{aligned}$$

To solve this problem, convert both the source and load to delta equivalent connections, as shown in Figure 12. The values of the three resistors are:

$$\begin{aligned} r_{ab} = r_{ca} &= \tfrac{2+4+2}{2} = 4 \\ r_{bc} &= \tfrac{2+4+2}{1} = 8 \end{aligned}$$

The complex amplitudes of the equivalent voltage sources are:

$$\begin{aligned} \underline{V}_{ab} &= \underline{V}_a - \underline{V}_b = \underline{V}\left(1 - e^{-j\frac{2\pi}{3}}\right) &&= \underline{V}\sqrt{3}e^{j\frac{\pi}{6}} \\ \underline{V}_{bc} &= \underline{V}_b - \underline{V}_c = \underline{V}\left(e^{-j\frac{2\pi}{3}} - e^{j\frac{2\pi}{3}}\right) &&= \underline{V}\sqrt{3}e^{-j\frac{\pi}{2}} \\ \underline{V}_{ca} &= \underline{V}_c - \underline{V}_a = \underline{V}\left(e^{j\frac{2\pi}{3}} - 1\right) &&= \underline{V}\sqrt{3}e^{j\frac{5\pi}{6}} \end{aligned}$$

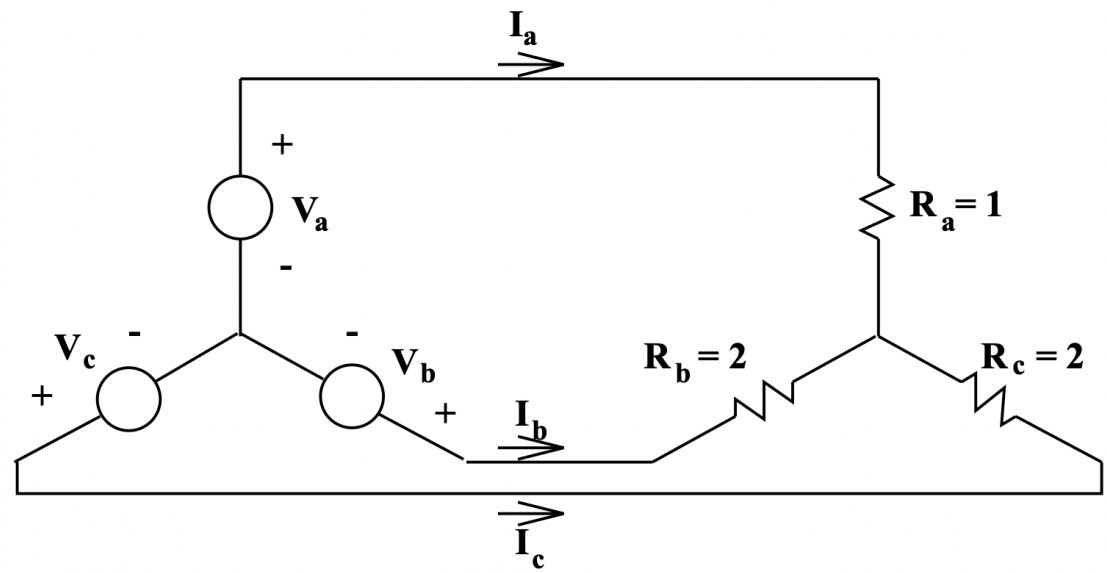

Figure 11: Unbalanced Load

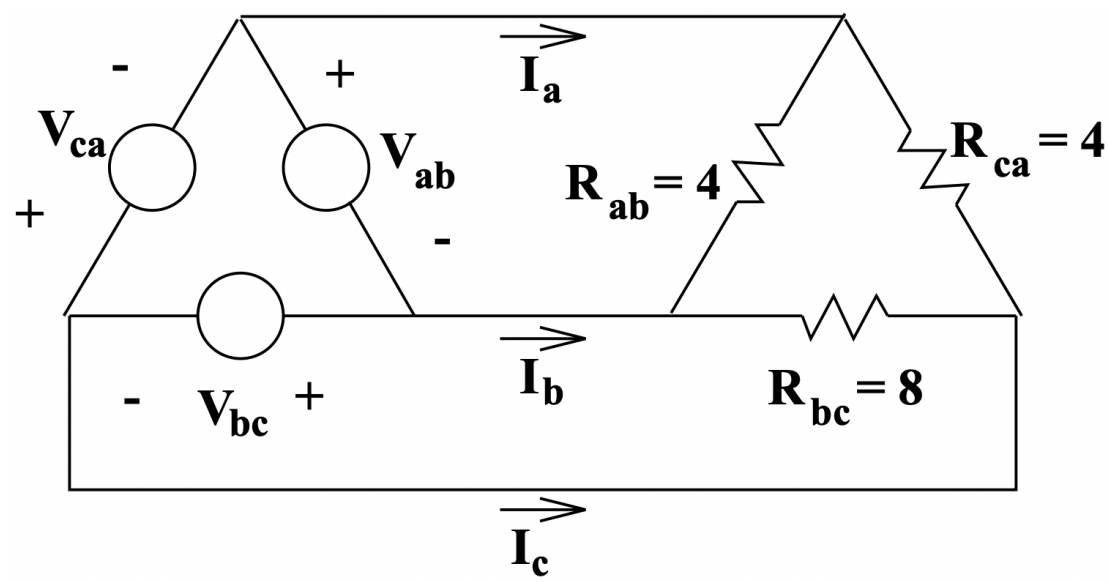

Figure 12: Delta Equivalent

Currents in each of the equivalent resistors are:

$$\underline{I}_1 = \frac{\underline{V}_{ab}}{r_{ab}} \quad \underline{I}_2 = \frac{\underline{V}_{bc}}{r_{bc}} \quad \underline{I}_3 = \frac{\underline{V}_{ca}}{r_{ca}}$$

The line curents are then just the difference between current in the legs of the delta:

$$\begin{aligned}
I_a &= I_1 - I_3 = \sqrt{3}V\left(\frac{e^{j\frac{\pi}{6}}}{4} - \frac{e^{j\frac{5\pi}{6}}}{4}\right) = \frac{3}{4}V \\
I_b &= I_2 - I_1 = \sqrt{3}V\left(\frac{e^{-j\frac{\pi}{2}}}{8} - \frac{e^{j\frac{\pi}{6}}}{4}\right) = -\left(\frac{3}{8} + j\frac{1}{4}\right)V \\
I_c &= I_3 - I_2 = \sqrt{3}V\left(\frac{e^{j\frac{5\pi}{6}}}{4} - \frac{e^{-j\frac{\pi}{2}}}{8}\right) = -\left(\frac{3}{8} - j\frac{1}{4}\right)V
\end{aligned}$$

These are shown in Figure 13.

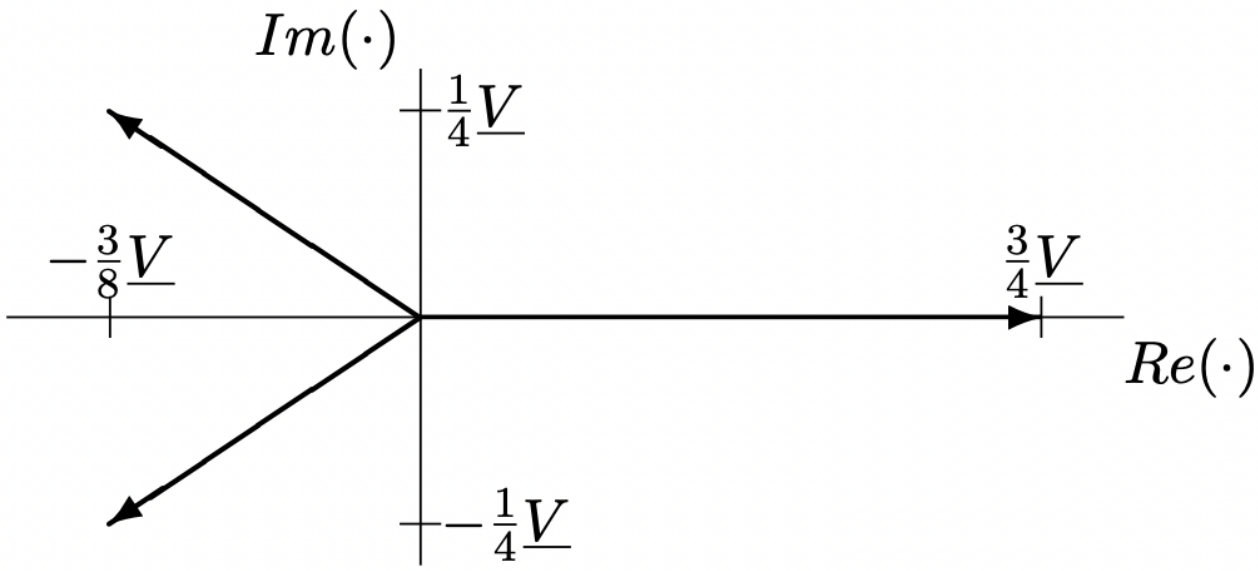

Figure 13: Line Currents

This page titled 3.3: Line-Line Voltages is shared under a CC BY-NC-SA 4.0 license and was authored, remixed, and/or curated by James Kirtley (MIT OpenCourseWare) via source content that was edited to the style and standards of the LibreTexts platform.

3.4: Transformers

Transformers are essential parts of most power systems. Their role is to convert electrical energy at one voltage to some other voltage. We will deal with transformers as electromagnetic elements later on in this subject, but for now it will be sufficient to use a simplified model for the transformer which we will call the ideal transformer. This is a two-port circuit element, shown in Figure 14.

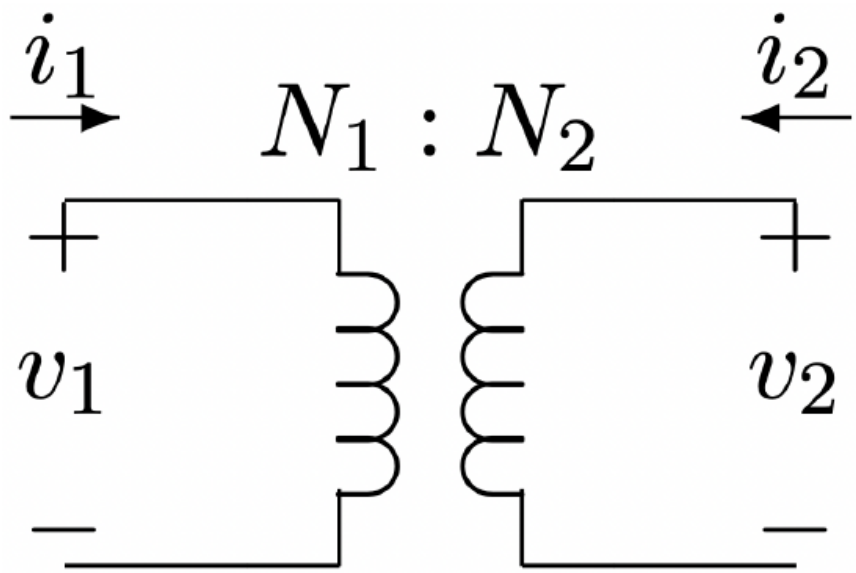

Figure 14: Ideal Transformer

The ideal transformer as a network element constrains its terminal variables in the following way:

$$\frac{v_1}{N_1} = \frac{v_2}{N_2} \tag{3.4.1}$$

$$N_1 i_1 = -N_2 i_2 \tag{3.4.2}$$

As it turns out, this is not a terribly bad model for the behavior of a real transformer under most circumstances. Of course, we will be interested in fine points of transformer behavior and behavior under pathological operating conditions, and so will eventually want a better model. For now, it is sufficient to note just a few things about how the transformer works.

1. In normal operation, we select a transformer turns ratio $\frac{N_1}{N_2}$ so that the desired voltages appear at the proper terminals. For example, to convert 13.8 kV distribution voltage to the 120/240 volt level suitable for residential or commercial single phase service, we would use a transformer with turns ratio of $\frac{13800}{240} = 57.5$. To split the low voltage in half, a center tap on 240 the low voltage winding would be used.
2. $$p_1 + p_2 = v_1 i_1 + v_2 i_2 = 0 \tag{3.4.3}$$
3. The transformer also tends to transform impedances. To show how this is, look at Figure 15. Here, some impedance is connected to one side of an ideal transformer. See that it is possible to find an equivalent impedance viewed from the other side of the transformer.

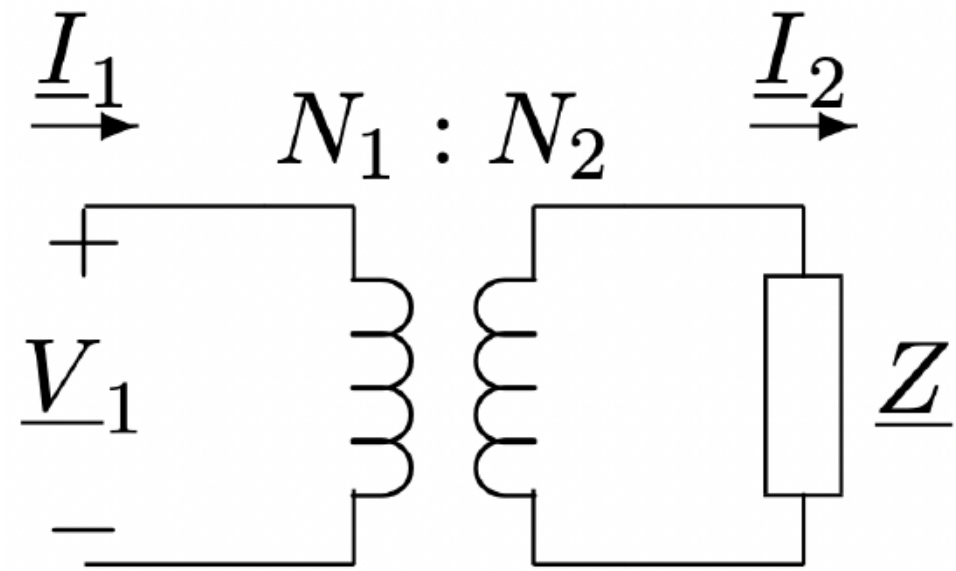

Figure 15: Impedance Transformation

Noting that

$$\underline{I}_2 = -\frac{N_1}{N_2}\underline{I}_1$$

and that

$$\underline{V}_2 = -\underline{Z}\underline{I}_2$$

Then the ratio between input voltage and current is:

$$\underline{V}_1 = \frac{N_1}{N_2}\underline{V}_2 = \left(\frac{N_1}{N_2}\right)^2 \underline{I}_1 \tag{3.4.4}$$

This page titled 3.4: Transformers is shared under a CC BY-NC-SA 4.0 license and was authored, remixed, and/or curated by James Kirtley (MIT OpenCourseWare) via source content that was edited to the style and standards of the LibreTexts platform.

3.5: Three-Phase Transformers

A three-phase transformer is simply three single phase transformers. The complication in these things is that there are a number of ways of winding them, and a number of ways of interconnecting them. We will have more to say about windings later. For now, consider interconnections. On either “side” of a transformer connection (i.e. the high voltage and low voltage sides), it is possible to connect transformer windings either line to neutral (wye), or line to line (delta). Thus we may speak of transformer connections being wye-wye, delta-delta, wye-delta, or delta-wye.

Ignoring certain complications that we will have more to say about shortly, connection of transformers in either wye-wye or delta-delta is reasonably easy to understand. Each of the line-to-neutral (in the case of wye-wye), or line-to-line (in the case of delta-delta) voltages is transformed by one of the three transformers. On the other hand, the interconnections of a wye-delta or delta-wye transformer are a little more complex. Figure 16 shows a delta-wye connection, in what might be called “wiring diagram” form. A more schematic (and more common) form of the same picture is shown in Figure 17. In that picture, winding elements that appear parallel are wound on the same core segment, and so constitute a single phase transformer.

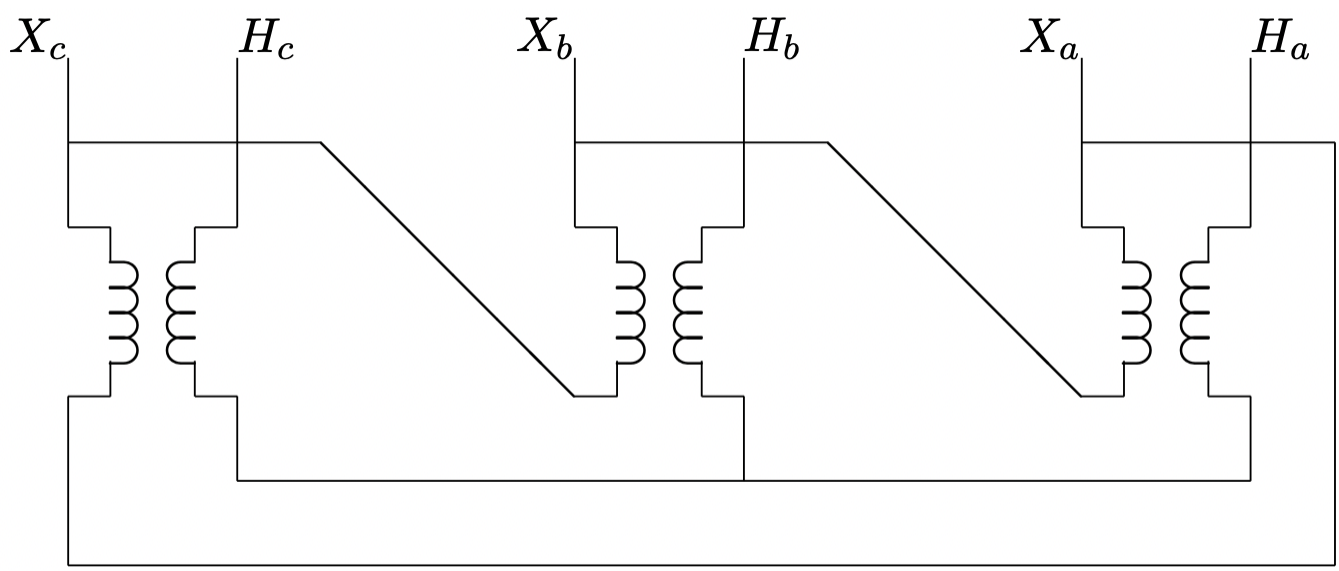

Figure 16: Delta-Wye Transformer Connection

Now: assume that N_Δ and N_Y are numbers of turns. If the individual transformers are considered to be ideal, the following voltage and current constraints exist:

$$v_{aY} = \frac{N_Y}{N_\Delta}\left(v_{a\Delta} - v_{b\Delta}\right) \tag{3.5.1}$$

$$v_{bY} = \frac{N_Y}{N_\Delta}\left(v_{b\Delta} - v_{c\Delta}\right) \tag{3.5.2}$$

$$v_{cY} = \frac{N_Y}{N_\Delta}\left(v_{c\Delta} - v_{a\Delta}\right) \tag{3.5.3}$$

$$i_{a\Delta} = \frac{N_Y}{N_\Delta}\left(i_{aY} - i_{cY}\right) \tag{3.5.4}$$

$$i_{b\Delta} = \frac{N_Y}{N_\Delta}\left(i_{bY} - i_{aY}\right) \tag{3.5.5}$$

$$i_{c\Delta} = \frac{N_Y}{N_\Delta}\left(i_{cY} - i_{bY}\right) \tag{3.5.6}$$

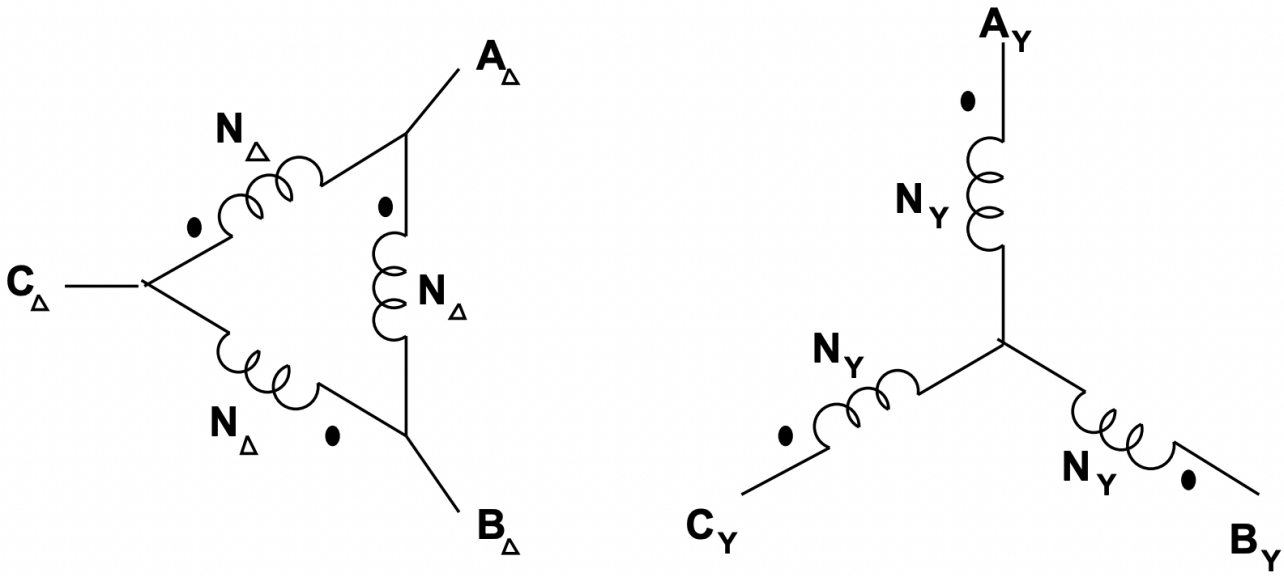

Figure 17: Schematic of Delta-Wye Transformer Connection

where each of the voltages are line-neutral and the currents are in the lines at the transformer terminals.

Now, consider what happens if a $\Delta - Y$ transformer is connected to a balanced three- phase voltage source, so that:

$$\begin{aligned} v_{a\Delta} &= Re\left(\underline{V}e^{j\omega t}\right) \\ v_{b\Delta} &= \mathrm{Re}\left(\underline{V}e^{j\left(\omega t - \frac{2\pi}{3}\right)}\right) \\ v_{c\Delta} &= \mathrm{Re}\left(\underline{V}e^{j\left(\omega t + \frac{2\pi}{3}\right)}\right) \end{aligned}$$

Then, complex amplitudes on the wye side are:

$$\begin{aligned} \underline{V}_{aY} = & \frac{N_Y}{N_\Delta}\underline{V}\left(1 - e^{-j\frac{2\pi}{3}}\right) = & \sqrt{3}\frac{N_Y}{N_\Delta}\underline{V}e^{j\frac{\pi}{6}} \\ \underline{V}_{bY} = & \frac{N_Y}{N_\Delta}\underline{V}\left(e^{-j\frac{2\pi}{3}} - e^{j\frac{2\pi}{3}}\right) = & \sqrt{3}\frac{N_Y}{N_\Delta}\underline{V}e^{-j\frac{\pi}{2}} \\ \underline{V}_{cY} = & \frac{N_Y}{N_\Delta}\underline{V}\left(e^{j\frac{2\pi}{3}} - 1\right) = & \sqrt{3}\frac{N_Y}{N_\Delta}\underline{V}e^{j\frac{5\pi}{6}} \end{aligned}$$

Two observations should be made here:

- The ratio of voltages (that is, the ratio of either line-line or line-neutral) is different from the turns ratio by a factor of $\sqrt{3}$.
- All wye side voltages are shifted in phase by 30° with respect to the delta side voltages.

Example

Suppose we have the following problem to solve:

A balanced three- phase wye-connected resistor is connected to the Δ side of a $Y - \Delta$ transformer with a nominal voltage ratio of

$$\frac{v_\Delta}{v_Y} = N$$

What is the impedance looking into the wye side of the transformer, assuming drive with a balanced source?

The situation is shown in Figure 18.

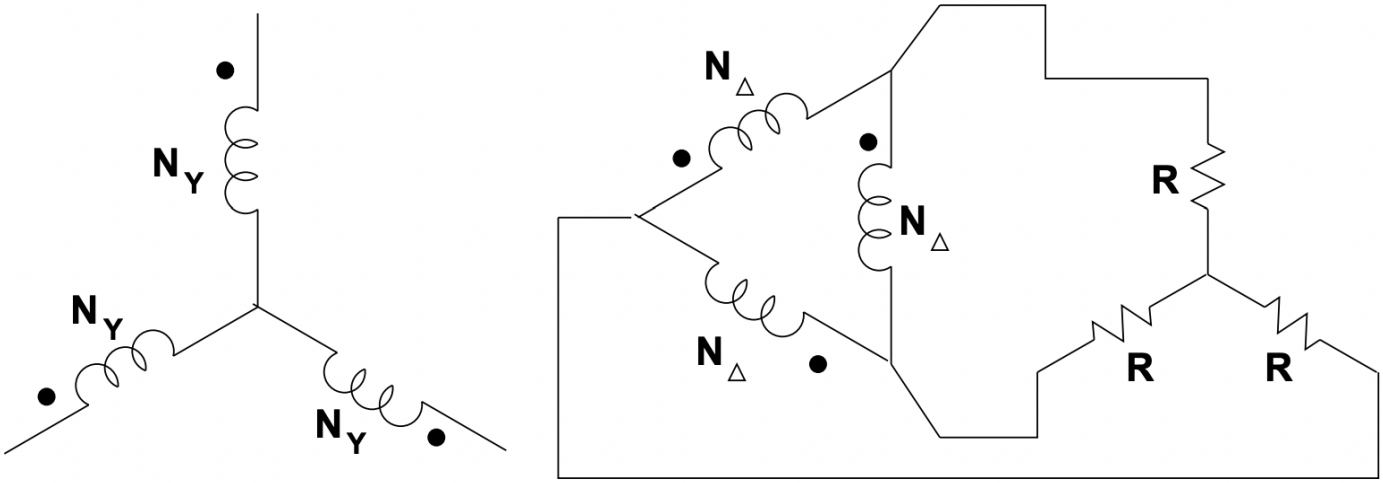

Figure 18: Example

It is important to remember the relationship between the voltage ratio and the turns ratio, which is:

$$\frac{v_\Delta}{v_Y} = N = \frac{N_\Delta}{\sqrt{3}N_Y}$$

so that:

$$\frac{N_\delta}{N_Y} = \frac{N}{\sqrt{3}}$$

Next, the $Y - \Delta$ equivalent transform for the load makes the picture look like figure 19

In this situation, each transformer secondary winding is conected directly across one of the three resistors. Currents in the resistors are given by:

$$\begin{aligned} i_1 &= \frac{v_{ab\Delta}}{3R} \\ i_2 &= \frac{v_{bc\Delta}}{3R} \\ i_3 &= \frac{v_{ca\Delta}}{3R} \end{aligned}$$

Line currents are:

$$\begin{aligned} i_{a\Delta} =& i_1 - i_3 = \frac{v_{ab\Delta} - v_{ca\Delta}}{3R} = i_{1\Delta} - i_{3\Delta} \\ i_{b\Delta} =& i_2 - i_1 = \frac{v_{bc\Delta} - v_{ab\Delta}}{3R} = i_{2\Delta} - i_{1\Delta} \\ i_{c\Delta} =& i_3 - i_2 = \frac{v_{ca\Delta} - v_{bc\Delta}}{3R} = i_{3\Delta} - i_{2\Delta} \end{aligned}$$

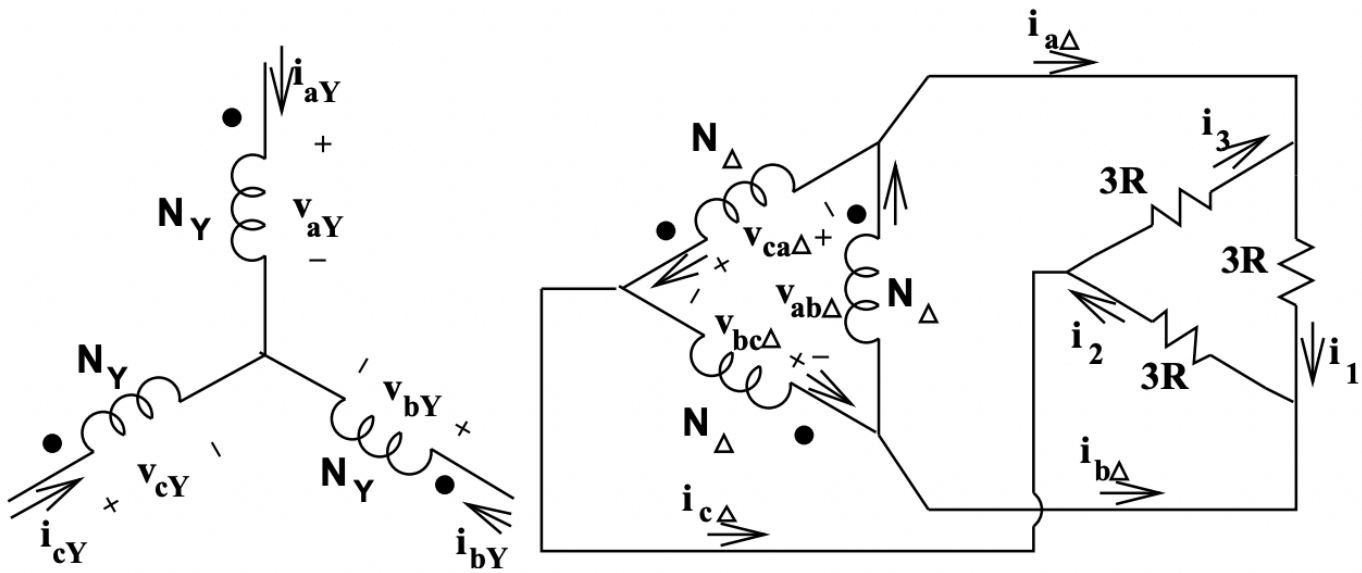

Figure 19: Equivalent Situation

Solving for currents in the legs of the transformer Δ, subtract, for example, the second expression from the first:

$$2i_{1\Delta} - i_{2\Delta} - i_{3\Delta} = \frac{2v_{ab\Delta} - v_{bc\Delta} - v_{ca\Delta}}{3R}$$

Now, taking advantage of the fact that the system is balanced:

$$\begin{aligned} i_{1\Delta} + i_{2\Delta} + i_{3\Delta} &= 0 \\ v_{ab\Delta} + v_{bc\Delta} + v_{ca\Delta} &= 0 \end{aligned}$$

to find:

$$\begin{aligned} i_{1\Delta} &= \frac{v_{ab\Delta}}{3R} \\ i_{2\Delta} &= \frac{v_{bc\Delta}}{3R} \\ i_{3\Delta} &= \frac{v_{ca\Delta}}{3R} \end{aligned}$$

Finally, the ideal transformer relations give:

$$\begin{aligned} v_{ab\Delta} &= \frac{N_\Delta}{N_Y} v_{aY} \quad & i_{aY} &= \frac{N_\Delta}{N_Y} i_{1\Delta} \\ v_{bc\Delta} &= \frac{N_\Delta}{N_Y} v_{bY} \quad & i_{bY} &= \frac{N_\Delta}{N_Y} i_{2\Delta} \\ v_{ca\Delta} &= \frac{N_\Delta}{N_Y} v_{cY} \quad & i_{cY} &= \frac{N_\Delta}{N_Y} i_{3\Delta} \end{aligned}$$

so that:

$$\begin{aligned} i_{aY} &= \left(\frac{N_\Delta}{N_Y}\right)^2 \frac{1}{3R} v_{aY} \\ i_{bY} &= \left(\frac{N_\Delta}{N_Y}\right)^2 \frac{1}{3R} v_{bY} \\ i_{cY} &= \left(\frac{N_\Delta}{N_Y}\right)^2 \frac{1}{3R} v_{cY} \end{aligned}$$

The apparent resistance (that is, apparent were it to be connected in wye) at the wye terminals of the transformer is:

$$R_{eq} = 3R\left(\frac{N_Y}{N_\Delta}\right)^2$$

Expressed in terms of voltage ratio, this is:

$$R_{eq} = 3R\left(\frac{N}{\sqrt{3}}\right)^2 = R\left(\frac{v_Y}{v_\Delta}\right)^2$$

It is important to note that this solution took the long way around. Taken consistently (uniformly on a line-neutral or uniformly on a line-line basis), impedances transform across transformers by the square of the voltage ratio, no matter what connection is used.

This page titled 3.5: Three-Phase Transformers is shared under a CC BY-NC-SA 4.0 license and was authored, remixed, and/or curated by James Kirtley (MIT OpenCourseWare) via source content that was edited to the style and standards of the LibreTexts platform.

3.6: Polyphase Lines and Single-Phase Equivalents

By now, one might suspect that a balanced polyphase system may be regarded simply as three single-phase systems, even though the three phases are physically interconnected. This feeling is reinforced by the equivalence between wye and $delta$ connected sources and impedances. One more step is required to show that single phase equivalence is indeed useful, and this concerns situations in which the phases have mutual coupling.

In speaking of lines, we mean such system elements as transmission or distribution lines: overhead wires, cables or even in-plant buswork. Such elements have impedance, so that there is some voltage drop between the sending and receiving ends of the line. This impedance is more than just conductor resistance: the conductors have both self and mutual inductance, because currents in the conductors make magnetic flux which, in turn, is linked by all conductors of the line.

A schematic view of a line is shown in Figure 20. Actually, only the inductance components of line impedance are shown, since they are the most interesting parts of line impedance. Working in complex amplitudes, it is possible to write the voltage drops for the three phases by:

$$\underline{V}_{a1} - \underline{V}_{a2} = j\omega L \underline{I}_a + j\omega M \left(\underline{I}_b + \underline{I}_c\right) \tag{3.6.1}$$

$$\underline{V}_{b1} - \underline{V}_{b2} = j\omega L \underline{I}_b + j\omega M \left(\underline{I}_a + \underline{I}_c\right) \tag{3.6.2}$$

$$\underline{V}_{c1} - \underline{V}_{c2} = j\omega L \underline{I}_c + j\omega M \left(\underline{I}_a + \underline{I}_b\right) \tag{3.6.3}$$

If the currents form a balanced set:

$$\underline{I}_a + \underline{I}_b + \underline{I}_c = 0 \tag{3.6.4}$$

Then the voltage drops are simply:

$$\begin{aligned} \underline{V}_{a1} - \underline{V}_{a2} &= j\omega(L-M)\underline{I}_a \\ \underline{V}_{b1} - \underline{V}_{b2} &= j\omega(L-M)\underline{I}_b \\ \underline{V}_{c1} - \underline{V}_{c2} &= j\omega(L-M)\underline{I}_c \end{aligned}$$

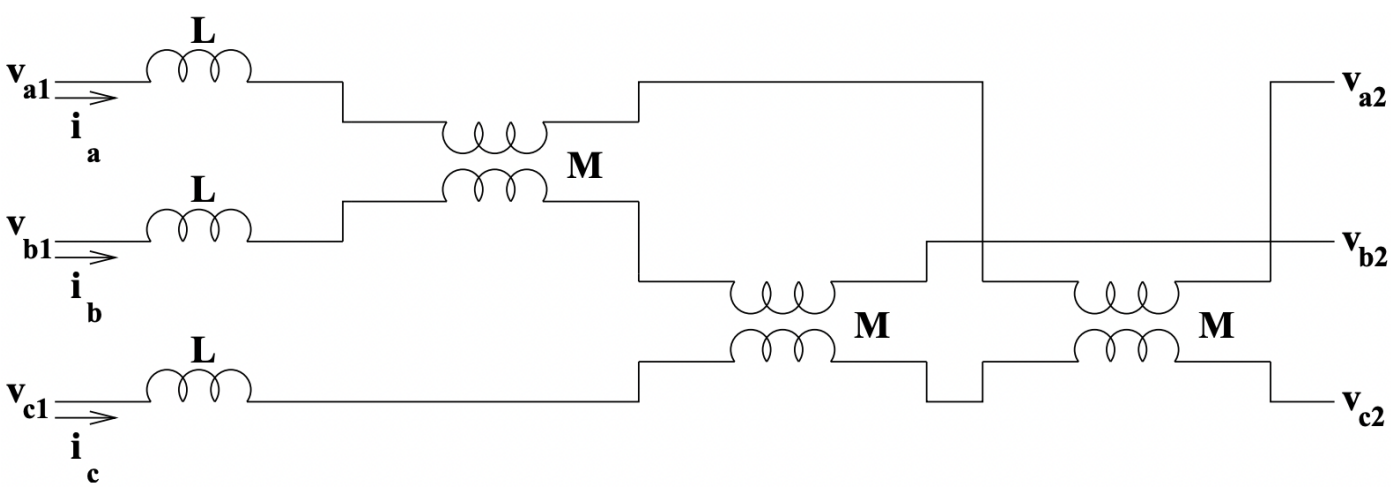

Figure 20: Schematic Of A Balanced Three-Phase Line With Mutual Coupling

In this case, an apparent inductance, suitable for the balanced case, has been defined:

$$L_1 = L - M \tag{3.6.5}$$

which describes the behavior of one phase in terms of its own current. It is most important to note that this inductance is a valid description of the line only if (46) holds, which it does, of course, in the balanced case.

Example

To show how the analytical techniques which come from the network simplification resulting from single phase equivalents and wye-delta transformations, consider the following problem:

A three-phase resistive load is connected to a balanced three-phase source through a transformer connected in delta-wye and a polyphase line, as shown in Figure 21.

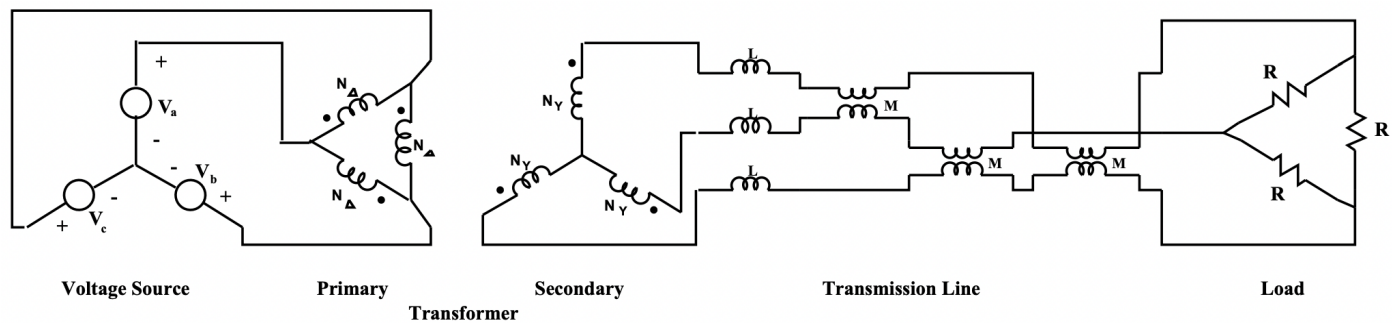

Figure 21: Example

The problem is to calculate power dissipated in the load resistors. The three- phase voltage source has:

$$\begin{aligned} v_a &= \mathrm{Re}\left[\sqrt{2}V_{RMS}e^{j\omega t}\right] \\ v_b &= \mathrm{Re}\left[\sqrt{2}V_{RMS}e^{j\left(\omega t-\frac{2\pi}{3}\right)}\right] \\ v_c &= \mathrm{Re}\left[\sqrt{2}V_{RMS}e^{j\left(\omega t+\frac{2\pi}{3}\right)}\right] \end{aligned}$$

This problem is worked by a succession of simple transformations. First, the delta connected resistive load is converted to its equivalent wye with $R_Y = \frac{R}{3}$.

Next, since the problem is balanced, the self- and mutual inductances of the line are directly equivalent to self inductances in each phase of $L_1 = L - M$.

Now, the transformer secondary is facing an impedance in each phase of:

$$\underline{Z}_{Ys} = j\omega L_1 + R_Y$$

The delta-wye transformer has a voltage ratio of:

$$\frac{v_p}{v_s} = \frac{N_\Delta}{\sqrt{3}N_Y}$$

so that, on the primary side of the transformer, the line and load impedance is:

$$\underline{Z}_p = j\omega L_{eq} + R_{eq}$$

where the equivalent elements are:

$$\begin{aligned} L_{eq} &= \frac{1}{3}\left(\frac{N_\Delta}{N_Y}\right)^2 (L-M) \\ R_{eq} &= \frac{1}{3}\left(\frac{N_\Delta}{N_Y}\right)^2 \frac{R}{3} \end{aligned}$$

Magnitude of current flowing in each phase of the source is:

$$|\underline{I}| = \frac{\sqrt{2}V_{RMS}}{\sqrt{(\omega L_{eq})^2 + R_{eq}^2}}$$

Dissipation in one phase is:

$$
\begin{aligned}
P_1 &= \frac{1}{2}|\underline{I}|^2 R_{eq} \\
&= \frac{V_{RMS}^2 R_{eq}}{(\omega L_{eq})^2 + R_{eq}^2}
\end{aligned}
\tag{3.6.6}
$$

And, of course, total power dissipated is just three times the single phase dissipation.

This page titled 3.6: Polyphase Lines and Single-Phase Equivalents is shared under a CC BY-NC-SA 4.0 license and was authored, remixed, and/or curated by James Kirtley (MIT OpenCourseWare) via source content that was edited to the style and standards of the LibreTexts platform.

3.7: Introduction To Per-Unit Systems

Strictly speaking, per-unit systems are nothing more than normalizations of voltage, current, impedance and power. These normalizations of system parameters because they provide simplifications in many network calculations. As we will discover, while certain ordinary parameters have very wide ranges of value, the equivalent per-unit parameters fall in a much narrower range. This helps in understanding how certain types of system behave.

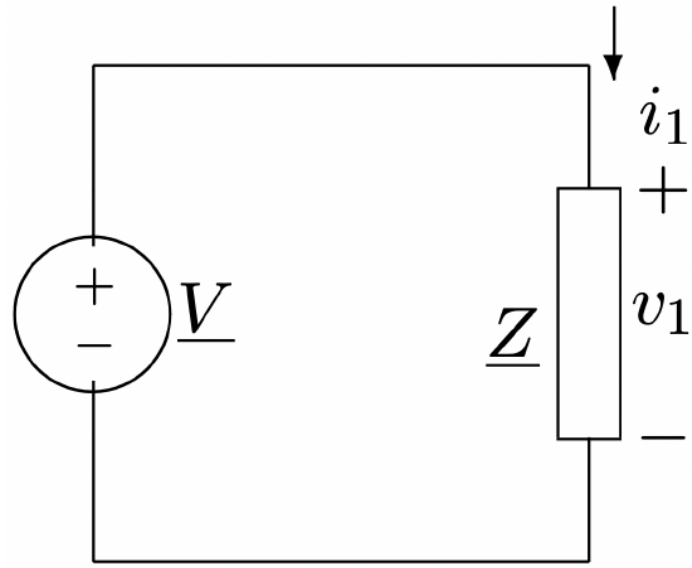

Figure 22: Example

Normalization Of Voltage And Current

The basis for the per-unit system of notation is the expression of voltage and current as fractions of base levels. Thus the first step in setting up a per-unit normalization is to pick base voltage and current.

Consider the simple situation shown in Figure 22. For this network, the complex amplitudes of voltage and current are:

$$\underline{V} = \underline{IZ} \tag{3.7.1}$$

We start by defining two base quantities, V_B for voltage and I_B for current. In many cases, these will be chosen to be nominal or rated values. For generating plants, for example, it is common to use the rated voltage and rated current of the generator as base quantities. In other situations, such as system stability studies, it is common to use a standard, system wide base system.

The per-unit voltage and current are then simply:

$$\underline{v} = \frac{\underline{V}}{V_B} \tag{3.7.2}$$

$$\underline{i} = \frac{\underline{I}}{I_B} \tag{3.7.3}$$

Applying (49) and (50) to (48), we find:

$$\underline{v} = \underline{iz} \tag{3.7.4}$$

where the per-unit impedance is:

$$\underline{z} = \underline{Z}\frac{I_B}{V_B} \tag{3.7.5}$$

This leads to a definition for a base impedance for the system:

$$Z_B = \frac{V_B}{I_B} \tag{3.7.6}$$

Of course there is also a base power, which for a single phase system is:

$$P_B = V_B I_B \tag{3.7.7}$$

as long as V_B and I_B are expressed in RMS. It is interesting to note that, as long as normalization is carried out in a consistent way, there is no ambiguity in per-unit notation. That is, peak quantities normalized to peak base quantities will be the same, in per-unit, as RMS quantities normalized to RMS bases. This advantage is even more striking in polyphase systems, as we are about to see.

Three Phase Systems

When describing polyphase systems, we have the choice of using either line-line or line-neutral voltage and line current or current in delta equivalent loads. In order to keep straight analysis in ordinary variable, it is necessary to carry along information about which of these quantities is being used. There is no such problem with per-unit notation.

We may use as base quantities either line to neutral voltage V_{Bl-g} or line to line voltage V_{Bl-l}.

Taking the base current to be line current I_{Bl}, we may express base power as:

$$P_B = 3V_{Bl-g}I_{Bl} \tag{3.7.8}$$

Because line-line voltage is, under normal operation, $\sqrt{3}$ times line-neutral voltage, an equivalent statement is:

$$P_B = \sqrt{3}V_{Bl-l}I_{Bl} \tag{3.7.9}$$

If base impedance is expressed by line-neutral voltage and line current (This is the common convention, but is not required),

$$Z_B = \frac{V_{Bl-g}}{I_{Bl}} \tag{3.7.10}$$

Then, base impedance is, written in terms of base power:

$$Z_B = \frac{P_B}{3I_B^2} = 3\frac{V_{Bl-g}^2}{P_B} = \frac{V_{Bl-l}^2}{P_B} \tag{3.7.11}$$

Note that a single per-unit voltage applied equally well to line-line, line-neutral, peak and RMS quantities. For a given situation, each of these quantities will have a different ordinary value, but there is only one per-unit value.

Networks With Transformers

One of the most important advantages of the use of per-unit systems arises in the analysis of networks with transformers. Properly applied, a per-unit normalization will cause nearly all ideal transformers to dissapear from the per-unit network, thus greatly simplifying analysis.

To show how this comes about, consider the ideal transformer as shown in Figure 23. The

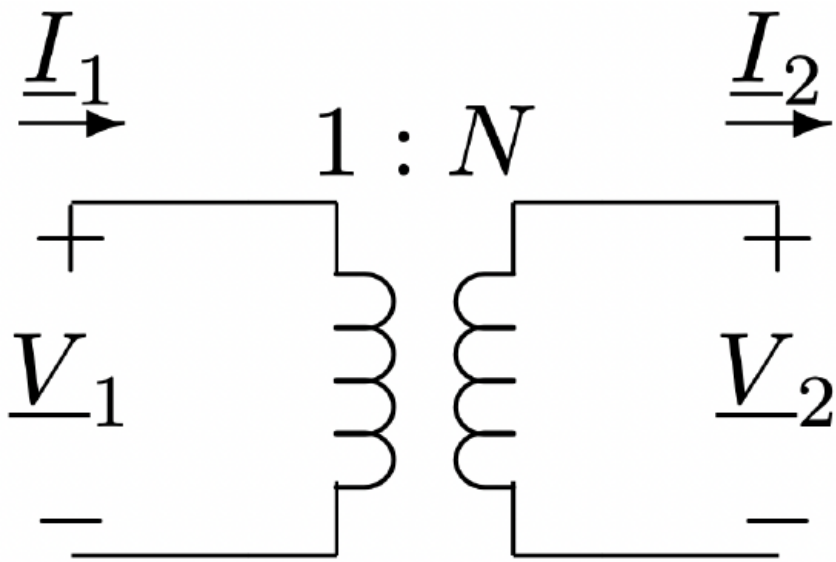

Figure 23: Ideal Transformer With Voltage And Current Conventions Noted

ideal transformer imposes the constraints that:

$$\underline{V}_2 = N\underline{V}_1$$
$$\underline{I}_2 = \frac{1}{N}\underline{I}_1$$

Normalized to base quantities on the two sides of the transformer, the per-unit voltage and current are:

$$\underline{v}_1 = \frac{\underline{V}_1}{V_{B1}}$$
$$\underline{i}_1 = \frac{\underline{I}_1}{I_{B1}}$$
$$\underline{v}_2 = \frac{\underline{V}_2}{V_{B2}}$$
$$\underline{i}_2 = \frac{\underline{I}_2}{I_{B2}}$$

Now: note that if the base quantities are related to each other as if they had been processed by the transformer:

$$V_{B2} = NV_{B1} \tag{3.7.12}$$

$$I_{B2} = \frac{I_{B1}}{N} \tag{3.7.13}$$

then $\underline{v}_1 = \underline{v}_2$ and $\underline{i}_1 = \underline{i}_2$, as if the ideal transformer were not there (that is, consisted of an ideal wire).

Expressions (59) and (60) reflect a general rule in setting up per-unit normalizations for systems with transformers. Each segment of the system should have the same base power. Base voltages transform according to transformer voltage ratios. For three-phase systems, of course, the voltage ratios may differ from the physical turns ratios by a factor of $\sqrt{3}$ if delta-wye or wye-delta connections are used. It is, however, the voltage ratio that must be used in setting base voltages.

Transforming From One Base To Another

Very often data such as transformer leakage inductance is given in per-unit terms, on some base (perhaps the units rating), while in order to do a system study it is necessary to express the same data in per-unit in some other base (perhaps a unified system base). It is always possible to do this by the two step process of converting the per-unit data to its ordinary form, then re-normalizing it in the new base. However, it is easier to just convert it to the new base in the following way.

Note that impedance in Ohms (ordinary units) is given by:

$$\underline{Z} = \underline{z}_1 Z_{B1} = \underline{z}_2 Z_{B2} \tag{3.7.14}$$

Here, of course, $\underline{z}_1$ and $\underline{z}_2$ are the same per-unit impedance expressed in different bases. This could be written as:

$$\underline{z}_1 \frac{V_{B1}^2}{P_{B1}} = \underline{z}_2 \frac{V_{B2}^2}{P_{B2}} \tag{3.7.15}$$

This yields a convenient rule for converting from one base system to another:

$$\underline{z}_1 = \frac{P_{B1}}{P_{B2}} \left(\frac{V_{B2}}{V_{B1}} \right)^2 \underline{z}_2 \tag{3.7.16}$$

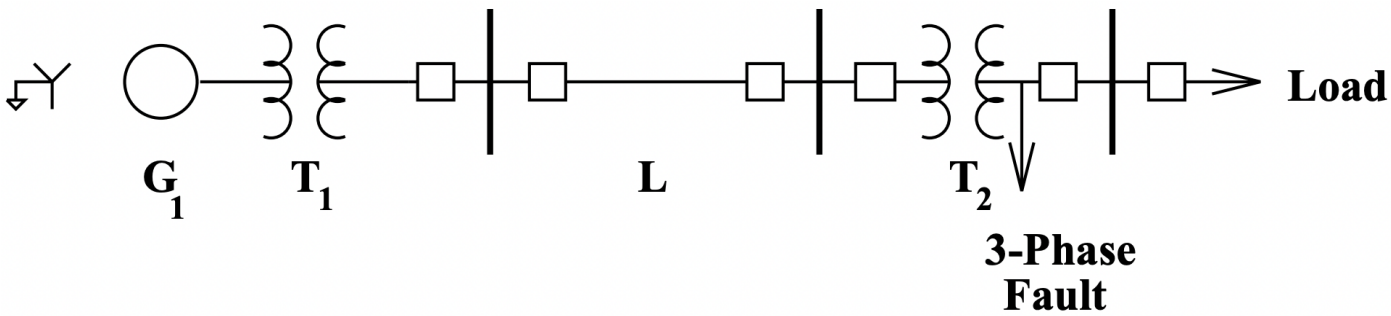

Figure 24: One-Line Diagram Of Faulted System

Example: Fault Study

To illustrate some of the concepts with which we have been dealing, we will do a short circuit analysis of a simple power system. This system is illustrated, in one-line diagram form, in Figure 24.

A one-line diagram is a way of conveying a lot of information about a power system without becoming cluttered with repetitive pieces of data. Drawing all three phases of a system would involve quite a lot of repetition that is not needed for most studies. Further, the three phases can be re-constructed from the one-line diagram if necessary. It is usual to use special symbols for different components of the network. For our network, we have the following pieces of data:

Symbol	Component	Base P	Base V	Impedance
G_1	Generator	200	13.8	$j.18$
T_1	Transformer	200	13.8/138	$j.12$
L_1	Trans. Line	100	138	$.02 + j.05$
T_2	Transformer	50	138/34.5	$j.08$

A three-phase fault is assumed to occur on the 34.5 kV side of the transformer T_2. This is a symmetrical situation, so that only one phase must be represented. The per-unit impedance diagram is shown in Figure 25. It is necessary to proceed now to determine the value of the components in this circuit.

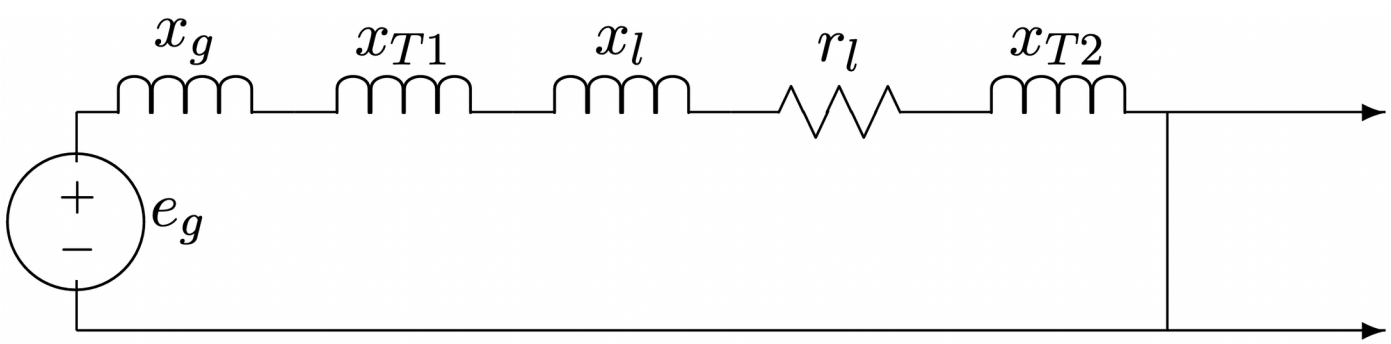

Figure 25: Impedance Diagram For Fault Example

First, it is necessary to establish a uniform base an per-unit value for each of the system components. Somewhat arbitrarily, we choose as the base segment the transmission line. Thus all of the parameters must be put into a base power of 100 MVA and voltage bases of 138 kV on the line, 13.8 kV at the generator, and 34.5 kV at the fault. Using (62):

$$\begin{aligned} x_g &= \frac{100}{200} \times .18 && = .09 \text{ per-unit} \\ x_{T1} &= \frac{100}{200} \times .12 && = .06 \text{ per-unit} \\ x_{T2} &= \frac{100}{50} \times .08 && = .16 \text{ per-unit} \\ r_l &= && .02 \text{ per-unit} \\ x_l &= && .05 \text{ per-unit} \end{aligned}$$

Total impedance is:

$$\begin{aligned} \underline{z} &= j\left(x_g + x_{T1} + x_l + x_{T2}\right) + r_l \\ &= j.36 + .02 \text{ per-unit} \\ |\underline{z}| &= .361 \text{ per-unit} \end{aligned}$$

Now, if e_g is equal to one per-unit (generator internal voltage equal to base voltage), then the per-unit current is:

$$|\underline{i}| = \frac{1}{.361} = .277 \text{ per-unit}$$

This may be translated back into ordinary units by getting base current levels. These are:

- $I_B = \frac{100\text{MVA}}{\sqrt{3} \times 13.8\text{kV}} = 4.18\text{kA}$
- $I_B = \frac{100\text{MVA}}{\sqrt{3} \times 138\text{kV}} = 418 \text{ A}$
- $I_B = \frac{100\text{MVA}}{\sqrt{3} \times 34.5\text{kV}} = 1.67\text{kA}$

Then the actual fault currents are:

- At the generator $\left|\underline{I}_f\right| = 11,595 \text{ A}$
- On the transmission line $\left|\underline{I}_f\right| = 1159 \text{ A}$
- At the fault $\left|\underline{I}_f\right| = 4633 \text{ A}$

This page titled 3.7: Introduction To Per-Unit Systems is shared under a CC BY-NC-SA 4.0 license and was authored, remixed, and/or curated by James Kirtley (MIT OpenCourseWare) via source content that was edited to the style and standards of the LibreTexts platform.

4: INTRODUCTION TO SYMMETRICAL COMPONENTS

Introduction

Installment 3 of these notes dealt primarily with networks that are balanced, in which the three voltages (and three currents) are identical but for exact 120° phase shifts. Unbalanced conditions may arise from unequal voltage sources or loads. It is possible to analyze some simple types of unbalanced networks using straightforward solution techniques and wye-delta transformations. However, power networks can be come quite complex and many situations would be very difficult to handle using ordinary network analysis. For this reason, a technique which has come to be called symmetrical components has been developed.

Symmetrical components, in addition to being a powerful analytical tool, is also conceptually useful. The symmetrical components themselves, which are obtained from a transformation of the ordinary line voltages and currents, are useful in their own right. Symmetrical components have become accepted as one way of describing the properties of many types of network elements such as transmission lines, motors and generators.

4.1: The Symmetrical Component Transformation

4.2: Sequence Impedances

4.3: Unbalanced Sources

4.4: Rotating Machines

4.5: Transformers

4.6: Unbalanced Faults

This page titled 4: Introduction to symmetrical components is shared under a CC BY-NC-SA 4.0 license and was authored, remixed, and/or curated by James Kirtley (MIT OpenCourseWare) via source content that was edited to the style and standards of the LibreTexts platform.

4.1: The Symmetrical Component Transformation

The basis for this analytical technique is a transformation of the three voltages and three currents into a second set of voltages and currents. This second set is known as the symmetrical components.

Working in complex amplitudes:

$$v_a = \mathrm{Re}\left(\underline{V}_a e^{j\omega t}\right) \tag{4.1.1}$$

$$v_b = \mathrm{Re}\left(\underline{V}_b e^{j\left(\omega t - \frac{2\pi}{3}\right)}\right) \tag{4.1.2}$$

$$v_c = \mathrm{Re}\left(\underline{V}_c e^{j\left(\omega t + \frac{2\pi}{3}\right)}\right) \tag{4.1.3}$$

The transformation is defined as:

$$\begin{bmatrix} \underline{V}_1 \\ \underline{V}_2 \\ \underline{V}_0 \end{bmatrix} = \frac{1}{3} \begin{bmatrix} 1 & \underline{a} & \underline{a}^2 \\ 1 & \underline{a}^2 & \underline{a} \\ 1 & 1 & 1 \end{bmatrix} \begin{bmatrix} \underline{V}_a \\ \underline{V}_b \\ \underline{V}_c \end{bmatrix}$$

where the complex number $\underline{a}$ is:

$$\underline{a} \quad = e^{j\frac{2\pi}{3}} \quad = -\frac{1}{2} + j\frac{\sqrt{3}}{2} \tag{4.1.4}$$

$$\underline{a}^2 = e^{j\frac{4\pi}{3}} = e^{-j\frac{2\pi}{3}} = -\frac{1}{2} - j\frac{\sqrt{3}}{2} \tag{4.1.5}$$

$$\underline{a}^3 \quad = 1 \tag{4.1.6}$$

This transformation may be used for both voltage and current, and works for variables in ordinary form as well as variables that have been normalized and are in per-unit form. The inverse of this transformation is:

$$\begin{bmatrix} \underline{V}_a \\ \underline{V}_b \\ \underline{V}_c \end{bmatrix} = \begin{bmatrix} 1 & 1 & 1 \\ \underline{a}^2 & \underline{a} & 1 \\ \underline{a} & \underline{a}^2 & 1 \end{bmatrix} \begin{bmatrix} \underline{V}_1 \\ \underline{V}_2 \\ \underline{V}_0 \end{bmatrix} \tag{4.1.7}$$

The three component variables $\underline{V}_1$, $\underline{V}_2$, $\underline{V}_0$ are called, respectively, positive sequence, negative sequence and zero sequence. They are called symmetrical components because, taken separately, they transform into symmetrical sets of voltages. The properties of these components can be demonstrated by tranforming each one back into phase variables.

Consider first the positive sequence component taken by itself:

$$\underline{V}_1 = V \tag{4.1.8}$$

$$\underline{V}_2 = 0 \tag{4.1.9}$$

$$\underline{V}_0 = 0 \tag{4.1.10}$$

yields:

$$\underline{V}_a = V \quad \text{or} \quad v_a = V\cos\omega t \tag{4.1.11}$$

$$\underline{V}_b = \underline{a}^2 V \quad \text{or} \quad v_b = V\cos\left(\omega t - \frac{2\pi}{3}\right) \tag{4.1.12}$$

$$\underline{V}_c = \underline{a} V \quad \text{or} \quad v_c = V\cos\left(\omega t + \frac{2\pi}{3}\right) \tag{4.1.13}$$

This is the familiar balanced set of voltages: Phase b lags phase a by 120° phase c lags phase b and phase a lags phase c.

The same transformation carried out on a negative sequence voltage:

$$\underline{V}_1 = 0 \tag{4.1.14}$$

$$\underline{V}_2 = V \tag{4.1.15}$$

$$\underline{V}_0 = 0 \tag{4.1.16}$$

yields:

$$\underline{V}_a = V \quad \text{or} \quad v_a = V\cos\omega t \tag{4.1.17}$$

$$\underline{V}_b = \underline{a}V \quad \text{or} \quad v_b = V\cos\left(\omega t + \frac{2\pi}{3}\right) \tag{4.1.18}$$

$$\underline{V}_c = \underline{a}^2 V \quad \text{or} \quad v_c = V\cos\left(\omega t - \frac{2\pi}{3}\right) \tag{4.1.19}$$

This is called negative sequence because the sequence of voltages is reversed: phase b now leads phase a rather than lagging. Note that the negative sequence set is still balanced in the sense that the phase components still have the same magnitude and are separated by 120° . The only difference between positive and negative sequence is the phase rotation. This is shown in Figure 1.

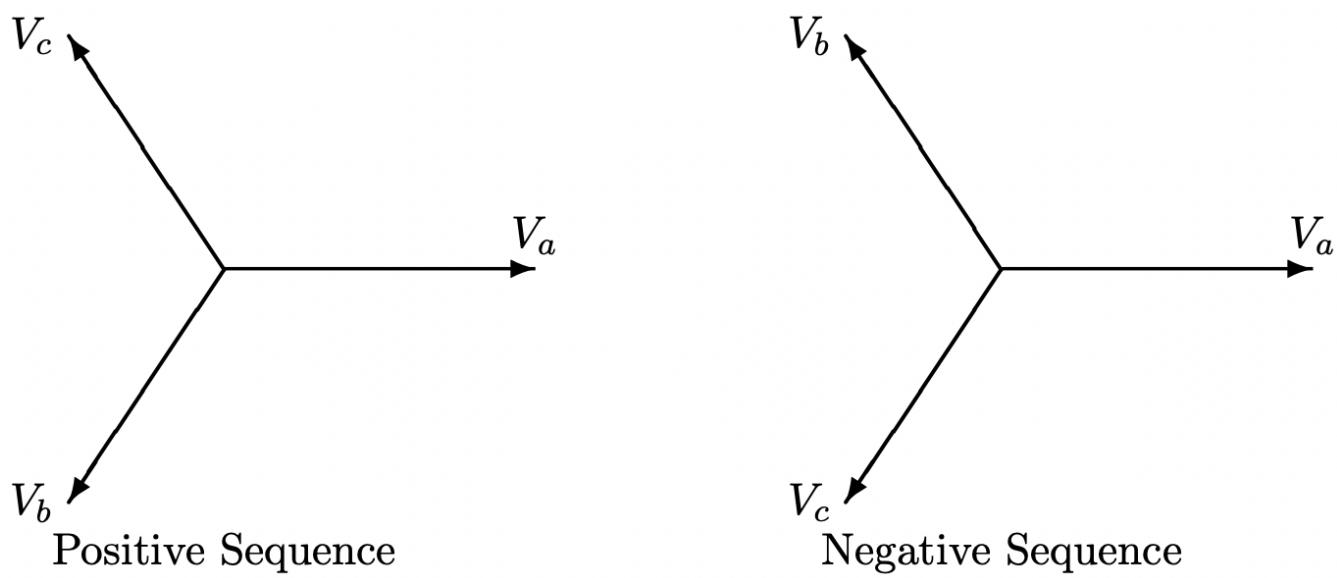

Figure 1: Phasor Diagram: Three Phase Voltages

The third symmetrical component is zero sequence. If:

$$\underline{V}_1 = 0 \tag{4.1.20}$$

$$\underline{V}_2 = 0 \tag{4.1.21}$$

$$\underline{V}_0 = V \tag{4.1.22}$$

Then:

$$\underline{V}_a = V \quad \text{or} \quad v_a = V\cos\omega t \tag{4.1.23}$$

$$\underline{V}_b = V \quad \text{or} \quad v_b = V\cos\omega t \tag{4.1.24}$$

$$\underline{V}_c = V \quad \text{or} \quad v_c = V\cos\omega t \tag{4.1.25}$$

That is, all three phases are varying together.

Positive and negative sequence sets contain those parts of the three-phase excitation that represent balanced normal and reverse phase sequence. Zero sequence is required to make up the difference between the total phase variables and the two rotating components.

The great utility of symmetrical components is that, for most types of network elements, the symmetrical components are independent of each other. In particular, balanced impedances and rotating machines will draw only positive sequence currents in response to positive sequence voltages. It is thus possible to describe a network in terms of sub-networks, one for each of the symmetrical components. These are called sequence networks. A completely balanced network will have three entirely separate sequence networks. If a network is unbalanced at a particular spot, the sequence networks will be interconnected at that spot. The key to use of symmetrical components in handling unbalanced situations is in learning how to formulate those interconnections.

This page titled 4.1: The Symmetrical Component Transformation is shared under a CC BY-NC-SA 4.0 license and was authored, remixed, and/or curated by James Kirtley (MIT OpenCourseWare) via source content that was edited to the style and standards of the LibreTexts platform.

4.2: Sequence Impedances

Many different types of network elements exhibit different behavior to the different symmetrical components. For example, as we will see shortly, transmission lines have one impedance for positive and negative sequence, but an entirely different impedance to zero sequence. Rotating machines have different impedances to all three sequences.

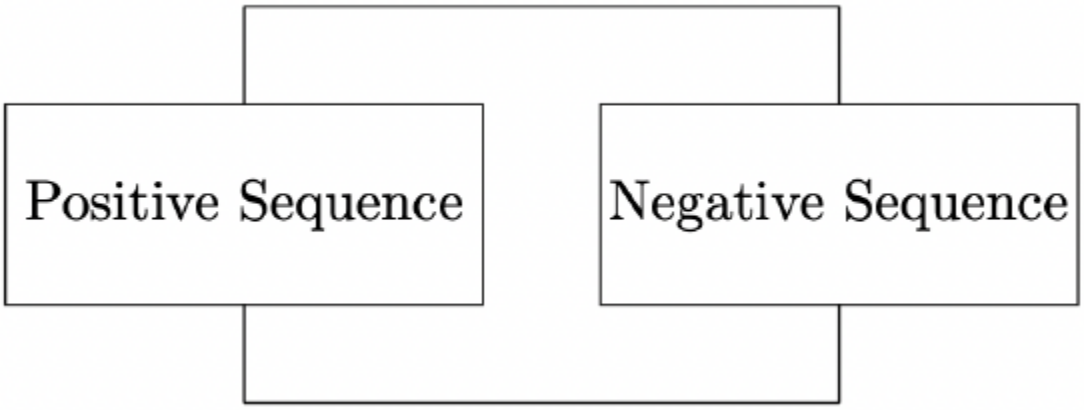

Figure 2: Sequence Connections For A Line-To-Line Fault

To illustrate the independence of symmetrical components in balanced networks, consider the transmission line illustrated back in Figure 20 of Installment 3 of these notes. The expressions for voltage drop in the lines may be written as a single vector expression:

$$\underline{V}_{ph1} - \underline{V}_{ph2} = j\omega \underline{\underline{L}}_{ph} \underline{I}_{ph} \tag{4.2.1}$$

where

$$\underline{V}_{ph} = \begin{bmatrix} \underline{V}_a \\ \underline{V}_b \\ \underline{V}_c \end{bmatrix} \tag{4.2.2}$$

$$\underline{I}_{ph} = \begin{bmatrix} \underline{I}_a \\ \underline{I}_b \\ \underline{I}_c \end{bmatrix} \tag{4.2.3}$$

$$\underline{\underline{L}}_{ph} = \begin{bmatrix} L & M & M \\ M & L & M \\ M & M & L \end{bmatrix} \tag{4.2.4}$$

Note that the symmetrical component transformation (4) may be written in compact form:

$$\underline{V}_s = \underline{\underline{T}} \underline{V}_p \tag{4.2.5}$$

where

$$\underline{\underline{T}} = \frac{1}{3} \begin{bmatrix} 1 & \underline{a} & \underline{a}^2 \\ 1 & \underline{a}^2 & \underline{a} \\ 1 & 1 & 1 \end{bmatrix} \tag{4.2.6}$$

and $\underline{V}_s$ is the vector of sequence voltages:

$$\underline{V}_s = \begin{bmatrix} \underline{V}_1 \\ \underline{V}_2 \\ \underline{V}_0 \end{bmatrix} \tag{4.2.7}$$

Rewriting (27) using the inverse of (31):

$$\underline{\underline{T}}^{-1}\underline{V}_{s1} - \underline{\underline{T}}^{-1}\underline{V}_{s2} = j\omega\underline{\underline{L}}_{ph}\underline{\underline{T}}^{-1}\underline{I}_s \tag{4.2.8}$$

Then transforming to get sequence voltages:

$$\underline{V}_{s1} - \underline{V}_{s2} = j\omega\underline{\underline{TL}}_{ph}\underline{\underline{T}}^{-1}\underline{I}_s \tag{4.2.9}$$

The sequence inductance matrix is defined by carrying out the operation indicated:

$$\underline{\underline{L}}_s = \underline{\underline{TL}}_{ph}\underline{\underline{T}}^{-1} \tag{4.2.10}$$

which is:

$$\underline{\underline{L}}_s = \begin{bmatrix} L-M & 0 & 0 \\ 0 & L-M & 0 \\ 0 & 0 & L+2M \end{bmatrix} \tag{4.2.11}$$

Thus the coupled set of expressions which described the transmission line in phase variables becomes an uncoupled set of expressions in the symmetrical components:

$$\underline{V}_{11} - \underline{V}_{12} = j\omega(L-M)\underline{I}_1 \tag{4.2.12}$$

$$\underline{V}_{21} - \underline{V}_{22} = j\omega(L-M)\underline{I}_2 \tag{4.2.13}$$

$$\underline{V}_{01} - \underline{V}_{02} = j\omega(L+2M)\underline{I}_0 \tag{4.2.14}$$

The positive, negative and zero sequence impedances of the balanced transmission line are then:

$$\underline{Z}_1 = \underline{Z}_2 = j\omega(L-M) \tag{4.2.15}$$

$$\underline{Z}_0 \quad = j\omega(L+2M) \tag{4.2.16}$$

So, in analysis of networks with transmission lines, it is now possible to replace the lines with three independent, single- phase networks.

Consider next a balanced three-phase load with its neutral connected to ground through an impedance as shown in Figure 3.

The symmetrical component voltage-current relationship for this network is found simply, by assuming positive, negative and zero sequence currents and finding the corresponding voltages. If this is done, it is found that the symmetrical components are independent, and that the voltagecurrent relationships are:

$$\underline{V}_1 = \underline{Z}\underline{I}_1 \tag{4.2.17}$$

$$\underline{V}_2 = \underline{Z}\underline{I}_2 \tag{4.2.18}$$

$$\underline{V}_0 = \left(\underline{Z} + 3\underline{Z}_g\right)\underline{I}_0 \tag{4.2.19}$$

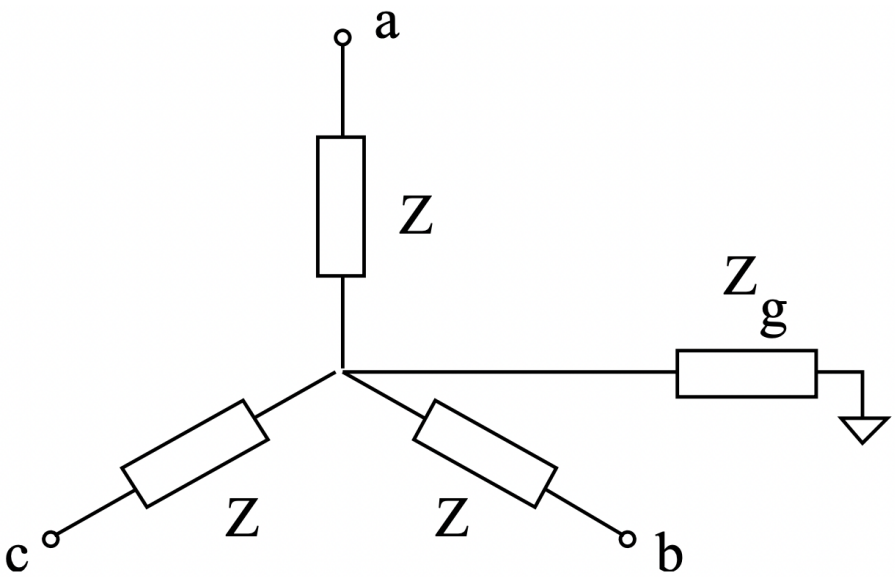

Figure 3: Balanced Load With Neutral Impedance

This page titled 4.2: Sequence Impedances is shared under a CC BY-NC-SA 4.0 license and was authored, remixed, and/or curated by James Kirtley (MIT OpenCourseWare) via source content that was edited to the style and standards of the LibreTexts platform.

4.3: Unbalanced Sources

Consider the network shown in Figure 4. A balanced three-phase resistor is fed by a balanced line (with mutual coupling between phases). Assume that only one phase of the voltage source is working, so that:

$$\underline{V}_a = V \tag{4.3.1}$$

$$\underline{V}_b = 0 \tag{4.3.2}$$

$$\underline{V}_c = 0 \tag{4.3.3}$$

The objective of this example is to find currents in the three phases.

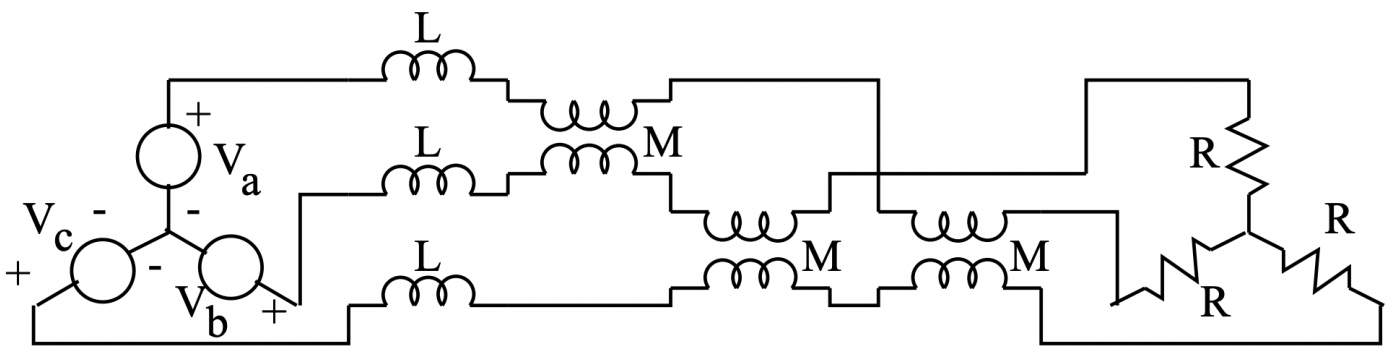

Figure 4: Balanced Load, Balanced Line, Unbalanced Source

To start, note that the unbalanced voltage source has the following set of symmetrical components:

$$\underline{V}_1 = \frac{V}{3} \tag{4.3.4}$$

$$\underline{V}_2 = \frac{V}{3} \tag{4.3.5}$$

$$\underline{V}_0 = \frac{V}{3} \tag{4.3.6}$$

Next, the network facing the source consists of the line, with impedances:

$$\underline{Z}_1 = j\omega(L - M) \tag{4.3.7}$$

$$\underline{Z}_2 = j\omega(L - M) \tag{4.3.8}$$

$$\underline{Z}_0 = j\omega(L + 2M) \tag{4.3.9}$$

and the three- phase resistor has impedances:

$$\underline{Z}_1 = R \tag{4.3.10}$$

$$\underline{Z}_2 = R \tag{4.3.11}$$

$$\underline{Z}_0 = \infty \tag{4.3.12}$$

Note that the impedance to zero sequence is infinite because the neutral is not connected back to the neutral of the voltage source. Thus the sum of line currents must always be zero and this in turn precludes any zero sequence current. The problem is thus described by the networks which appear in Figure 5.

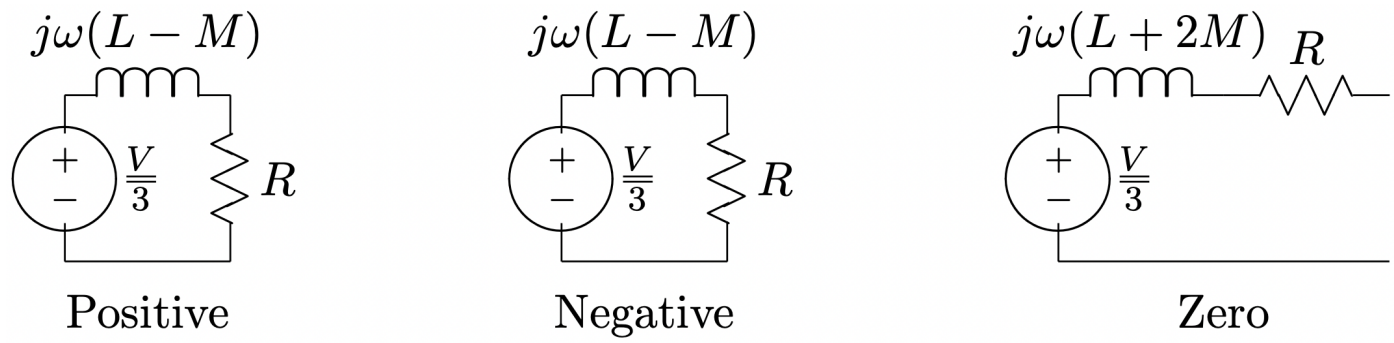

Figure 5: Sequence Networks

Currents are:

$$\begin{aligned}
\underline{I}_1 &= \frac{V}{3(j\omega(L-M)+R)} \\
\underline{I}_2 &= \frac{V}{3(j\omega(L-M)+R)} \\
\underline{I}_0 &= 0
\end{aligned}$$

Phase currents may now be re-assembled:

$$\begin{aligned}
\underline{I}_a &= \underline{I}_1 + \underline{I}_2 + \underline{I}_0 \\
\underline{I}_b &= \underline{a}^2 \underline{I}_1 + \underline{a}\underline{I}_2 + \underline{I}_0 \\
\underline{I}_c &= \underline{a}\underline{I}_1 + \underline{a}^2 \underline{I}_2 + \underline{I}_0
\end{aligned}$$

or:

$$\begin{aligned}
\underline{I}_a &= \frac{2V}{3(j\omega(L-M)+R)} \\
\underline{I}_b &= \frac{\left(\underline{a}^2 + \underline{a}\right) V}{3(j\omega(L-M)+R)} \\
&= \frac{-V}{3(j\omega(L-M)+R)} \\
\underline{I}_c &= \frac{\left(\underline{a} + \underline{a}^2\right) V}{3(j\omega(L-M)+R)} \\
&= \frac{-V}{3(j\omega(L-M)+R)}
\end{aligned}$$

(Note that we have used $\underline{a}^2 + \underline{a} = -1$).

This page titled 4.3: Unbalanced Sources is shared under a CC BY-NC-SA 4.0 license and was authored, remixed, and/or curated by James Kirtley (MIT OpenCourseWare) via source content that was edited to the style and standards of the LibreTexts platform.

4.4: Rotating Machines

Some network elements are more readily represented by sequence networks than by ordinary phase networks. This is the case, for example, for synchronous machines. synchronous motors and generators produce a positive sequence internal voltage and have terminal impedance. For reasons which are beyond the scope of these notes, the impedance to positive sequence currents is not the same as the impedance to negative or to zero sequence currents. A phase-by-phase representation will not, in many situations, be adequate, but a sequence network representation will. Such a representation is three Thevenin equivalent circuits, as shown in Figure 6

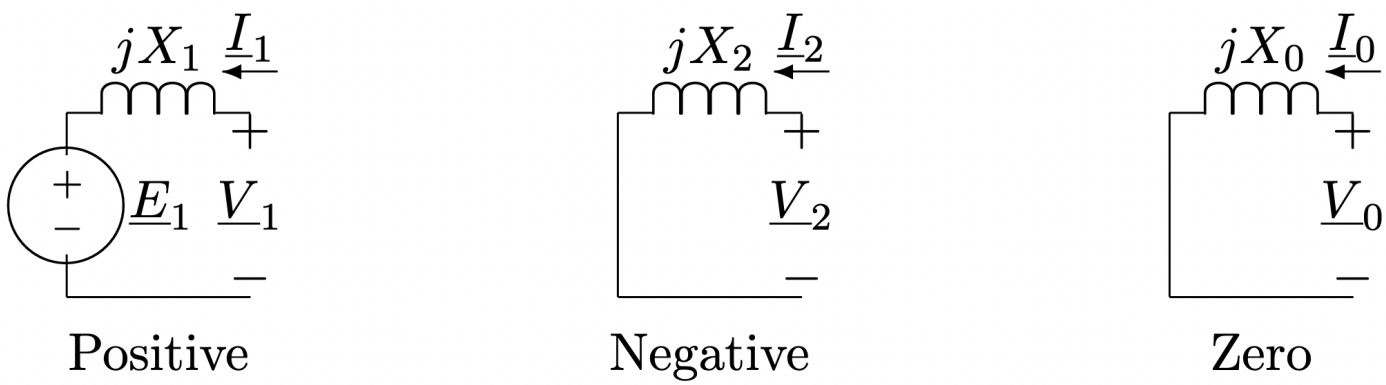

Figure 6: Sequence Networks For A Synchronous Machine

This page titled 4.4: Rotating Machines is shared under a CC BY-NC-SA 4.0 license and was authored, remixed, and/or curated by James Kirtley (MIT OpenCourseWare) via source content that was edited to the style and standards of the LibreTexts platform.

4.5: Transformers

Transformers provide some interesting features in setting up sequence networks. The first of these arises from the fact that wye-delta or delta-wye transformer connections produce phase shifts from primary to secondary. Depending on connection, this phase shift may be either plus or minus 30° from primary to secondary for positive sequence voltages and currents. It is straightforward to show that negative sequence shifts in the opposite direction from positive. Thus if the connection advances positive sequence across the transformer, it retards negative sequence. This does not turn out to affect the setting up of sequence networks, but does affect the re-construction of phase currents and voltages.

A second important feature of transformers arises because delta and ungrounded wye connections are open circuits to zero sequence at their terminals. A delta connected winding, on the other hand, will provide a short circuit to zero sequence currents induced from a wye connected winding. Thus the zero sequence network of a transformer may take one of several forms. Figures 7 through 9 show the zero sequence networks for various transformer connections.

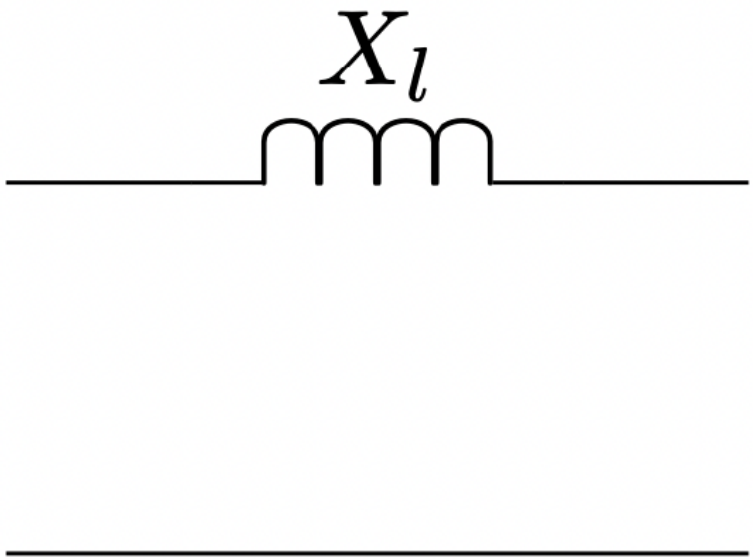

Figure 7: Zero Sequence Network: Wye-Wye Connection, Both Sides Grounded

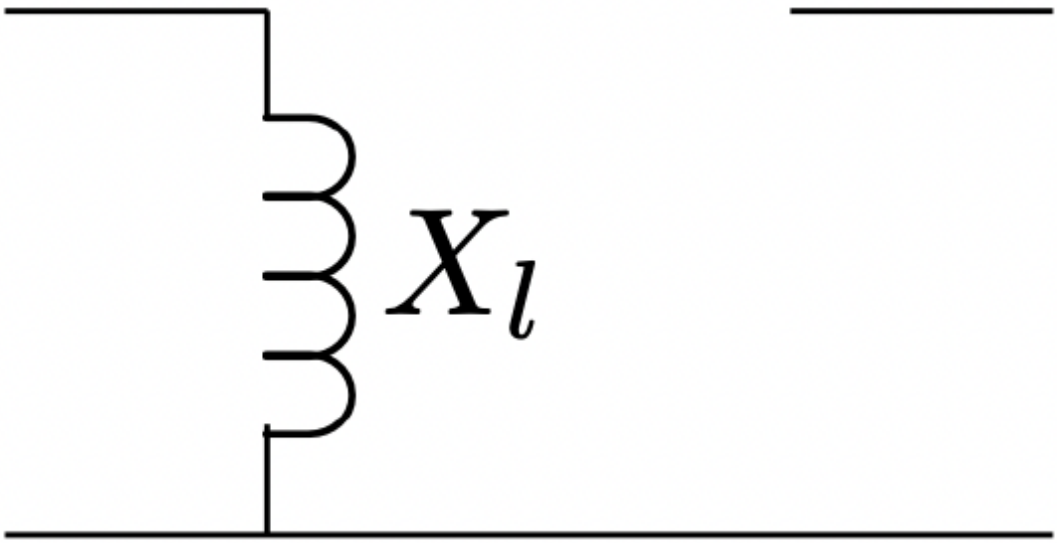

Figure 8: Zero Sequence Network: Wye-Delta Connection, Wye Side (Left) Grounded

This page titled 4.5: Transformers is shared under a CC BY-NC-SA 4.0 license and was authored, remixed, and/or curated by James Kirtley (MIT OpenCourseWare) via source content that was edited to the style and standards of the LibreTexts platform.

4.6: Unbalanced Faults

A very common application of symmetrical components is in calculating currents arising from unblanced short circuits. For three-phase systems, the possible unbalanced faults are:

1. Single line-ground,
2. Double line-ground,
3. Line-line.

These are considered separately.

Single Line-To-Ground Fault

The situation is as shown in Figure 10

The system in this case consists of networks connected to the line on which the fault occurs. The point of fault itself consists of a set of terminals (which we might call “a,b,c”). The fault sets,

Figure 9: Zero Sequence Network: Wye-Delta Connection, Ungrounded or Delta-Delta

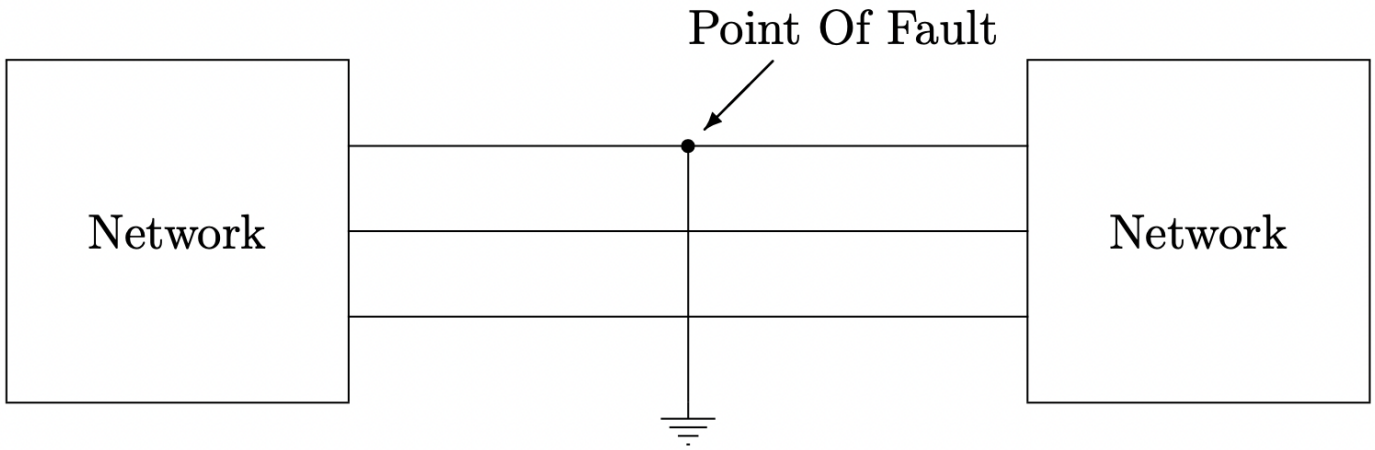

Figure 10: Schematic Picture Of A Single Line-To-Ground Fault

at this point on the system:

$$\underline{V}_a = 0$$
$$\underline{I}_b = 0$$
$$\underline{I}_c = 0$$

Now: using the inverse of the symmetrical component transformation, we see that:

$$\underline{V}_1 + \underline{V}_2 + \underline{V}_0 = 0 \tag{4.6.1}$$

And using the transformation itself:

$$\underline{I}_1 = \underline{I}_2 = \underline{I}_0 = \frac{1}{3}\underline{I}_a \tag{4.6.2}$$

Together, these two expressions describe the sequence network connection shown in Figure 11. This connection has all three sequence networks connected in series.

Double Line-To-Ground Fault

If the fault involves phases b, c, and ground, the “terminal” relationship at the point of the fault is:

$$\underline{V}_b = 0$$
$$\underline{V}_c = 0$$
$$\underline{I}_a = 0$$

Then, using the sequence transformation:

$$\underline{V}_1 = \underline{V}_2 = \underline{V}_0 = \tfrac{1}{3}\underline{V}_a$$

Combining the inverse transformation:

$$\underline{I}_a = \underline{I}_1 + \underline{I}_2 + \underline{I}_0 = 0$$

These describe a situation in which all three sequence networks are connected in parallel, as shown in Figure 12.

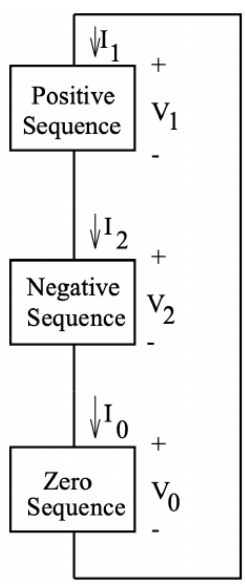

Figure 11: Sequence Connection For A Single-Line-To-Ground Fault

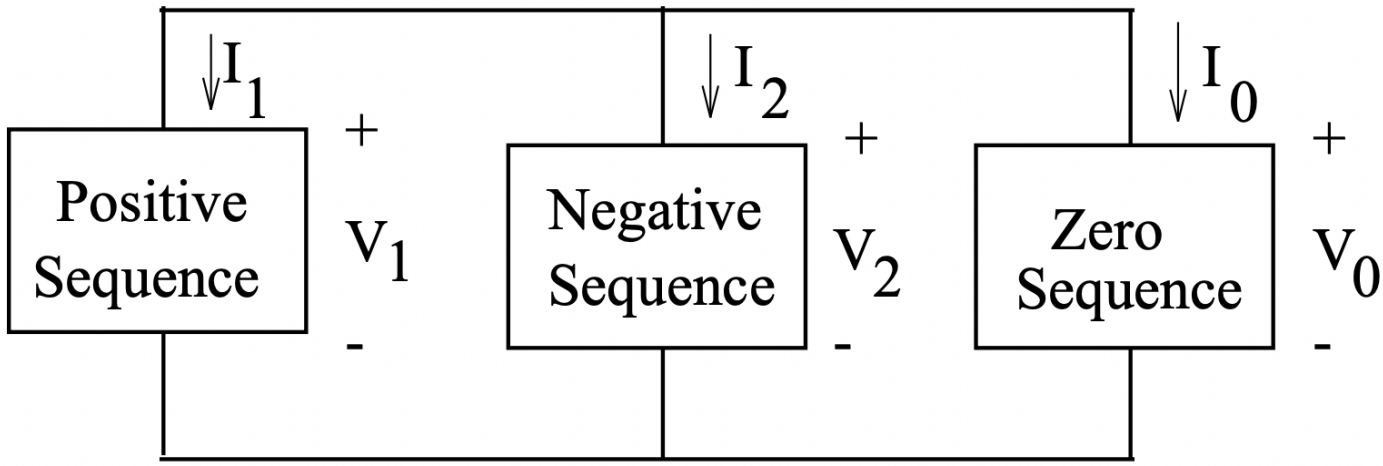

Figure 12: Sequence Connection For A Double-Line-To-Ground Fault

Line-Line Fault

If phases b and c are shorted together but not grounded,

$$\begin{aligned}\underline{V}_b &= \underline{V}_c \\ \underline{I}_b &= -\underline{I}_c \\ \underline{I}_a &= 0\end{aligned}$$

Expressing these in terms of the symmetrical components:

$$\begin{aligned}\underline{V}_1 &= \underline{V}_2 \\ &= \frac{1}{3}\left(\underline{a}+\underline{a}^2\right)\underline{V}_b \\ \underline{I}_0 &= \underline{I}_a + \underline{I}_b + \underline{I}_c \\ &= 0 \\ \underline{I}_a &= \underline{I}_1 + \underline{I}_2 \\ &= 0\end{aligned}$$

These expressions describe a parallel connection of the positive and negative sequence networks, as shown in Figure 13.

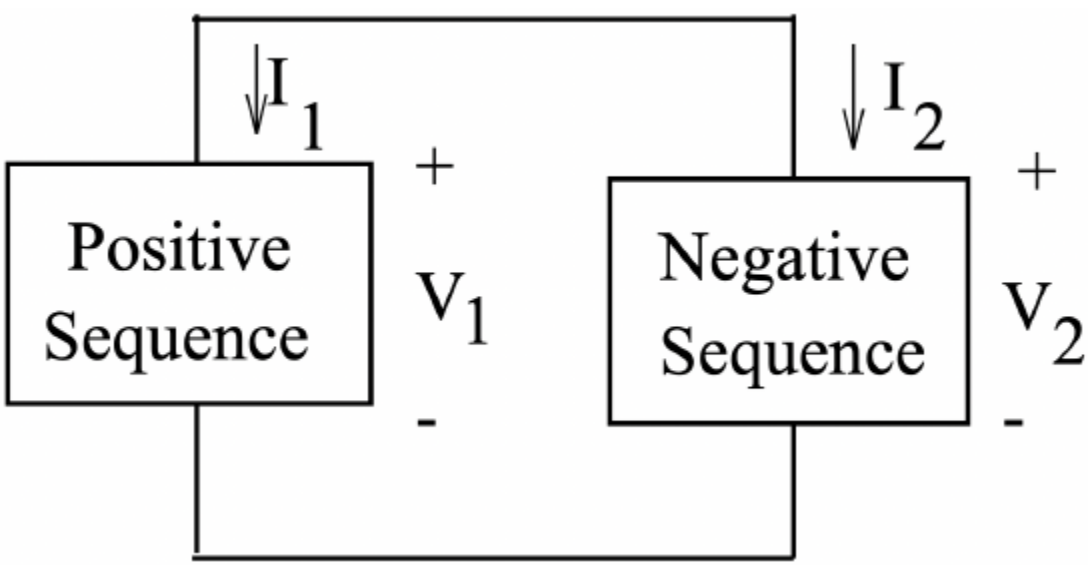

Figure 13: Sequence Connection For A Line-To-Line Fault

Example Of Fault Calculations

In this example, the objective is to determine maximum current through the breaker B due to a fault at the location shown in Figure 14. All three types of unbalanced fault, as well as the balanced fault are to be considered. This is the sort of calculation that has to be done whenever a line is installed or modified, so that protective relaying can be set properly.

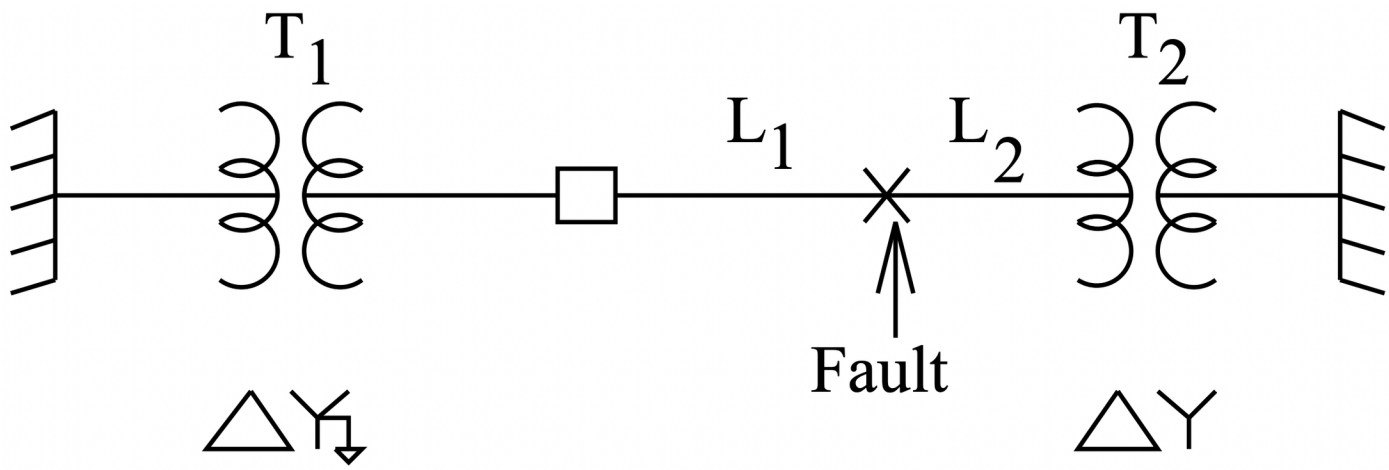

Figure 14: One-Line Diagram For Example Fault

Parameters of the system are:

System Base Voltage	138 kV
System Base Power	100 MVA
Transformer T_1 Leakage Reactance	.1 per-unit
Transformer T_2 Leakage Reactance	.1 per-unit
Line L_1 Positive And Negative Sequence Reactance	j.05 per-unit
Line L_1 Zero Sequence Impedance	j.1 per-unit
Line L_2 Positive And Negative Sequence Reactance	j.02 per-unit
Line L_2 Zero Sequence Impedance	j.1 per-unit

The fence-like symbols at either end of the figure represent “infinite buses”, or positive sequence voltage sources.

The first step in this is to find the sequence networks. These are shown in Figure 15. Note that they are exactly like what we would expect to have drawn for equivalent single phase networks. Only the positive sequence network has sources, because the infinite bus supplies only positive sequence voltage. The zero sequence network is open at the right hand side because of the deltawye transformer connection there.

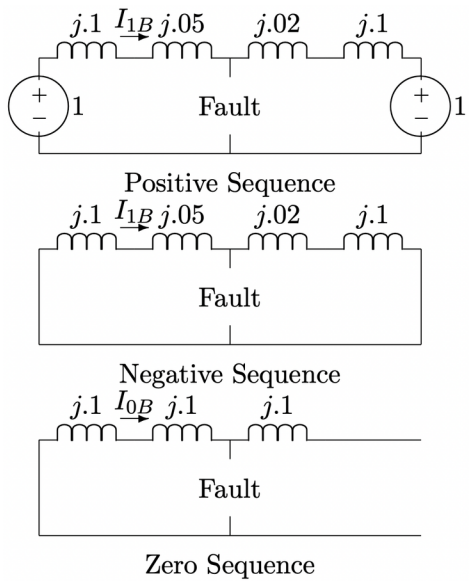

Figure 15: Sequence Networks

Symmetrical Fault

For a symmetrical (three-phase) fault, only the positive sequence network is involved. The fault shorts the network at its position, so that the current is:

$$\underline{i}_1 = \frac{1}{j.15} = -j6.67 \text{ per } - \text{ unit}$$

Single Line-Ground Fault

For this situation, the three networks are in series and the situation is as shown in Figure 16

The current $\underline{i}$ shown in Figure 16 is a total current, and is given by:

$$\underline{i} = \frac{1}{2\times(j.15\|j.12)+j.2} = -j3.0$$

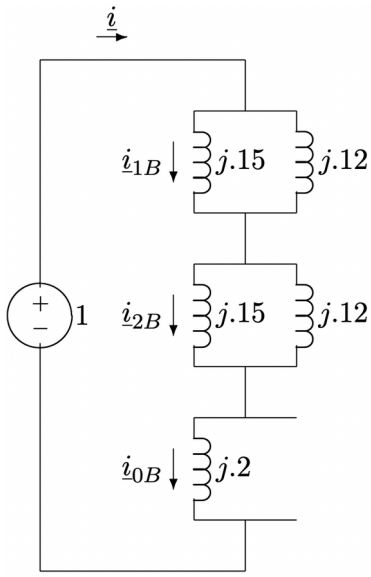

Figure 16: Completed Network For Single Line-Ground Fault

Then the sequence currents at the breaker are:

$$
\begin{aligned}
\underline{i}_{1B} &= \underline{i}_{2B} \\
&= \underline{i} \times \frac{j.12}{j.12 + j.15} \\
&= -j1.33 \\
\underline{i}_{0B} &= \underline{i} \\
&= -j3.0
\end{aligned}
$$

The phase currents are re-constructed using:

$$
\begin{aligned}
\underline{i}_a &= \underline{i}_{1B} + \underline{i}_{2B} + \underline{i}_{0B} \\
\underline{i}_b &= \underline{a}^2 \underline{i}_{1B} + \underline{a} \underline{i}_{2B} + \underline{i}_{0B} \\
\underline{i}_c &= \underline{a} \underline{i}_{1B} + \underline{a}^2 \underline{i}_{2B} + \underline{i}_{0B}
\end{aligned}
$$

These are:

$$
\begin{aligned}
i_a &= -j5.66 \qquad \text{per-unit} \\
\underline{i}_b &= -j1.67 \qquad \text{per-unit} \\
\underline{i}_c &= -j1.67 \qquad \text{per-unit}
\end{aligned}
$$

Double Line-Ground Fault

For the double line-ground fault, the networks are in parallel, as shown in Figure 17.

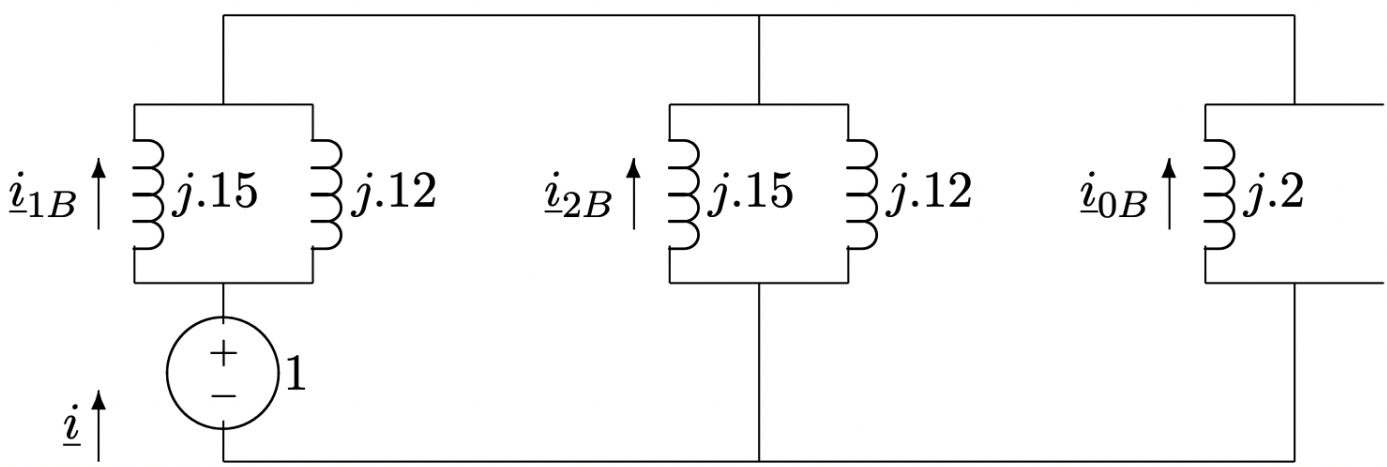

Figure 17: Completed Network For Double Line-Ground Fault

To start, find the source current $\underline{i}$:

$$
\begin{aligned}
\underline{i} &= \frac{1}{j(.15|| \cdot 12) + j(.15||.12||.2)} \\
&= -j8.57
\end{aligned}
$$

Then the sequence currents at the breaker are:

$$
\begin{aligned}
\underline{i}_{1B} &= \underline{i} \times \frac{j.12}{j.12 + j.15} \\
&= -j3.81 \\
\underline{i}_{2B} &= -\underline{i} \times \frac{j.12 \| j.2}{j.12 \| j.2 + j.15} \\
&= j2.86 \\
\underline{i}_{0B} &= \underline{i} \times \frac{j.12 \| j.15}{j.2 + j.12 \| j.15} \\
&= j2.14
\end{aligned}
$$

Reconstructed phase currents are:

$$
\begin{aligned}
\underline{i}_a &= j1.19 \\
\underline{i}_b &= \underline{i}_{0B} - \frac{1}{2}\left(\underline{i}_{1B} + \underline{i}_{2B}\right) - \frac{\sqrt{3}}{2} j\left(\underline{i}_{1B} - \underline{i}_{2B}\right) \\
&= j2.67 - 5.87 \\
\underline{i}_c &= \underline{i}_{0B} - \frac{1}{2}\left(\underline{i}_{1B} + \underline{i}_{2B}\right) + \frac{\sqrt{3}}{2} j\left(\underline{i}_{1B} - \underline{i}_{2B}\right) \\
&= j2.67 + 5.87 \\
|\underline{i}_a| &= 1.19 \quad \text{per-unit} \\
|\underline{i}_b| &= 6.43 \quad \text{per-unit} \\
|i_c| &= 6.43 \quad \text{per-unit}
\end{aligned}
$$

Line-Line Fault

The situation is even easier here, as shown in Figure 18

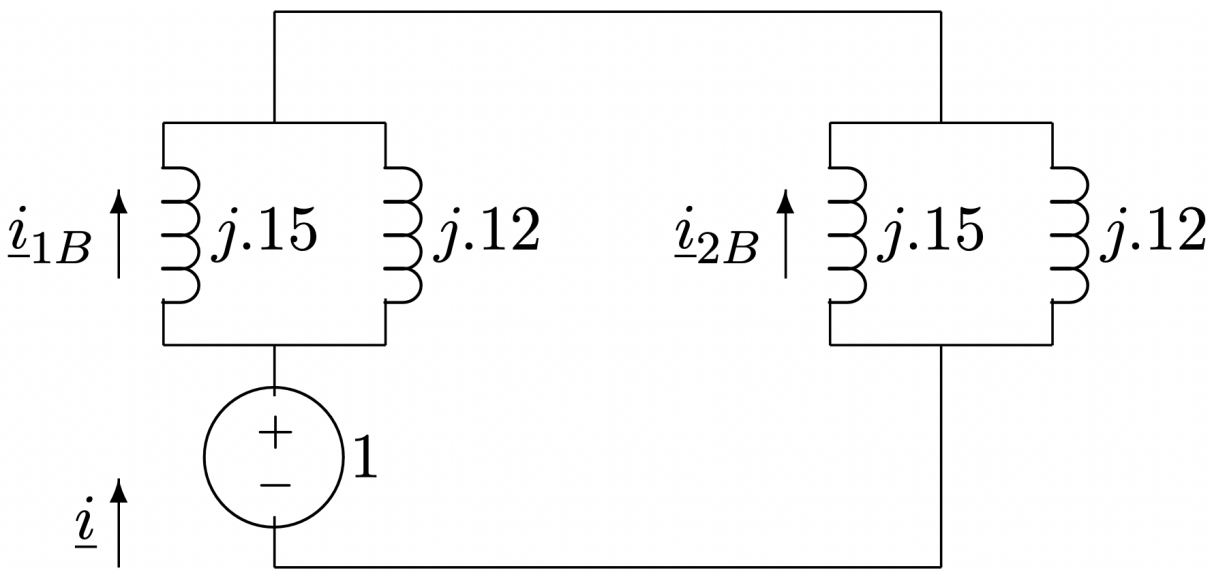

Figure 18: Completed Network For Line-Line Fault

The source current $\underline{i}$ is:

$$
\begin{aligned}
\underline{i} &= \frac{1}{2 \times j(.15 \| .12)} \\
&= -j7.50
\end{aligned}
$$

and then:

$$
\begin{aligned}
\underline{i}_{1B} &= -\underline{i}_{2B} \\
&= i\frac{j.12}{j.12 + j.15} \\
&= -j3.33
\end{aligned}
$$

Phase currents are:

$$
\begin{aligned}
\underline{i}_a &= 0 \\
\underline{i}_b &= -\frac{1}{2}\left(\underline{i}_{1B} + \underline{i}_{2B}\right) - j\frac{\sqrt{3}}{2}\left(\underline{i}_{1B} - \underline{i}_{2B}\right) \\
|\underline{i}_b| &= 5.77 \quad \text{per-unit} \\
|i_c| &= 5.77 \quad \text{per-unit}
\end{aligned}
$$

Conversion To Amperes

Base current is:

$$I_B = \frac{P_B}{\sqrt{3}V_{Bl-l}} = 418.4A$$

Then current amplitudes are, in Amperes, RMS:

	Phase A	Phase B	Phase C
Three-Phase Fault	2791	2791	2791
Single Line-Ground, ϕ_a	2368	699	699
Double Line-Ground, ϕ_b, ϕ_c	498	2690	2690
Line-Line, ϕ_b, ϕ_c	0	2414	2414

This page titled 4.6: Unbalanced Faults is shared under a CC BY-NC-SA 4.0 license and was authored, remixed, and/or curated by James Kirtley (MIT OpenCourseWare) via source content that was edited to the style and standards of the LibreTexts platform.

5: INTRODUCTION TO LOAD FLOW

Even though electric power networks are composed of components which are (or can be approximated to be) linear, electric power flow, real and reactive, is a nonlinear quantity. The calculation of load flow in a network is the solution to a set of nonlinear equations. The purpose of this note is to describe how network load flows may be calculated.

This is only an elementary treatment of this problem: there is still quite a bit of activity in the professional literature concerning load flow algorithms. The reason for this is that electric utility networks are often quite large, having thousands of buses, so that the amount of computational effort required for a solution is substantial. A lot of effort goes into doing the calculation efficiently. This discussion, and the little computer program at the end of this note, uses the crudest possible algorithm for this purpose. However, for the relatively simple problems we will be doing, it should work just fine.

5.1: Power Flow

5.2: Bus Admittance

5.3: Gauss–Seidel Iterative Technique

5.4: Example- Simple–Minded Program

5.5: Example

This page titled 5: Introduction to Load Flow is shared under a CC BY-NC-SA 4.0 license and was authored, remixed, and/or curated by James Kirtley (MIT OpenCourseWare) via source content that was edited to the style and standards of the LibreTexts platform.

5.1: Power Flow

Power flow in a network is determined by the voltage at each bus of the network and the impedances of the lines between buses. Power flow into and out of each of the buses that are network terminals is the sum of power flows of all of the lines connected to that bus. The load flow problem consists of finding the set of voltages: magnitude and angle, which, together with the network impedances, produces the load flows that are known to be correct at the system terminals. To start, we view the power system as being a collection of buses, connected together by lines. At each of the buses, which we may regard as nodes, we may connect equipment which will supply power to or remove power from the system. (Note: in speaking of power here, we are really referring to complex power, with both real and reactive components). If we have made a connection to a given system node (say with a generator), the complex power flow into the network at node k is:

$$\mathbf{S}_k = P_k + jQ_k = \mathbf{V}_k \mathbf{I}_k^* \tag{5.1.1}$$

This page titled 5.1: Power Flow is shared under a CC BY-NC-SA 4.0 license and was authored, remixed, and/or curated by James Kirtley (MIT OpenCourseWare) via source content that was edited to the style and standards of the LibreTexts platform.

5.2: Bus Admittance

Now, if the network itself is linear, interconnections between buses and between buses and ground can all be summarized in a multiport bus impedance matrix or its inverse, the bus admittance matrix. As it turns out, the admittance matrix is easy to formulate.

The network consists of a number N_b of buses and another number N_ℓ of lines. Each of the lines will have some (generally complex) impedance Z. We form the line admittance matrix by placing the admittance (reciprocal of impedance) of each line on the appropriate spot on the main diagonal of an $N_\ell \times N_\ell$ matrix:

$$\mathbf{Y}_\ell = \begin{bmatrix} \frac{1}{\mathbf{Z}_1} & 0 & 0 & \cdots \\ 0 & \frac{1}{\mathbf{Z}_2} & 0 & \cdots \\ 0 & 0 & \frac{1}{\mathbf{Z}_3} & \cdots \\ \vdots & \vdots & & \ddots \end{bmatrix} \tag{5.2.1}$$

Interconnections between buses is described by the bus incidence matrix. This matrix, which has N_ℓ columns and N_b rows, has two entries for each line, corresponding to the buses at each end. A "direction" should be established for each line, and the entry for that line, at location (n_b, n_ℓ) in the node incidencd matrix, is a 1 for the "sending" end and a –1 at the "receiving" end. Actually, it is not important which end is which. The bus incidence matrix for the network described by Figure 1 below is:

$$\underline{\underline{NI}} = \begin{bmatrix} 1 & 0 & 0 & 0 \\ 0 & 0 & 0 & 1 \\ -1 & 1 & 1 & 0 \\ 0 & 0 & -1 & -1 \\ 0 & -1 & 0 & 0 \end{bmatrix}$$

It is not difficult to show that the bus admittance matrix is given by the easily computed expression:

$$\underline{\underline{\mathbf{Y}}} = \underline{\underline{\mathbf{NI}}} \quad \underline{\mathbf{Y}_\ell} \quad \underline{\underline{\mathbf{NI}'}} \tag{5.2.2}$$

The elements of the bus admittance matrix, the self– and mutual– admittances, are all of the following form:

$$\mathbf{Y}_{jk} = \frac{\mathbf{I}_k}{\mathbf{V}_j} \tag{5.2.3}$$

with all other voltages equal to zero.

Thus an alternative way to estimate the bus admittance matrix is to:

- Assume that all nodes (buses) are shorted to ground,
- Assume that one node is unshorted and connected to a voltage source,
- Calculate all node currents resulting from that one source.
- Do this for each node.

We may observe:

- **Reciprocity** holds:

$$\mathbf{Y}_{jk} = Y_{kj} \tag{5.2.4}$$

- **Driving point admittance** $\mathbf{Y}_{kk}$ is just the sum of all admittances of lines connected to bus k, including any fixed impedances connected from that bus to ground.
- **Mutual admittance** $\mathbf{Y}_{jk}$ is minus the sum of the admittances of all lines connected directly between buses j and k. Usually there is only one such line.

Network currents are then given by:

$$\underline{\mathbf{I}} = \underline{\underline{\mathbf{Y}}} \quad \underline{\mathbf{V}} \tag{5.2.5}$$

Where $\underline{\mathbf{I}}$ is the vector of bus currents (that is, those currents entering the network at its buses. $\underline{\mathbf{V}}$ represents the bus voltages and $\underline{\underline{Y}}$ is the bus admittance matrix. We will have more to say about estimating the bus admittance matrix in another section. For the moment, note that an individual bus current is given by:

$$\mathbf{I}_k = \sum_{j=1}^{N} \mathbf{Y}_{jk} \mathbf{V}_j \tag{5.2.6}$$

where N is the number of buses in the network. Then complex power flow at a node is:

$$\mathbf{S}_k = \mathbf{V}_k \sum_{j=1}^{N} \mathbf{Y}_{jk}^* \mathbf{V}_j^* \tag{5.2.7}$$

Now, the typical load flow problem involves buses with different constraints. It is possible to specify six quantities at each bus: voltage magnitude and angle, current magnitude and angle, real and reactive power. These are, of course, inter–related so that any two of these are specified by the other four, and the network itself provides two more constraints. Thus it is necessary to, in setting up a load flow problem, specify two of these six quantities. Typical combinations are:

- **Generator Bus**: Real power and terminal voltage magnitude are specified.
- **Load Bus**: Real and reactive power are specified.
- **Fixed Impedance**: A fixed, linear impedance connected to a bus constrains the relationship between voltage and current. Because it constrains both magnitude and angle, such an impedance constitutes two constraints.
- **Infinite Bus**: This is a voltage source, of constant magnitude and phase angle.

The load flow problem consists of solving Equation 5.2.7 as constrained by the terminal relationships.

One bus in a load flow problem is assigned to be the “slack bus” or “swing bus”. This bus, which is taken to be an “infinite bus”, since it does not have real nor reactive power constrained, accommodates real power dissipated and reactive power stored in network lines. This bus is necessary because these losses are not known a priori. Further, one phase angle needs to be specified, to serve as an origin for all of the others.

This page titled 5.2: Bus Admittance is shared under a CC BY-NC-SA 4.0 license and was authored, remixed, and/or curated by James Kirtley (MIT OpenCourseWare) via source content that was edited to the style and standards of the LibreTexts platform.

5.3: Gauss–Seidel Iterative Technique

This is one of many techniques for solving the nonlinear load flow problem. It should be pointed out that this solution technique, while straightforward to use and easy to understand, has a tendency to use a lot of computation, particularly in working large problems. It is also quite capable of converging on incorrect solutions (that is a problem with nonlinear systems). As with other iterative techniques, it is often difficult to tell when the correct solution has been reached. Despite these shortcomings, Gauss–Seidel can be used to get a good feel for load flow problems without excessive numerical analysis baggage.

Suppose we have an initial estimate (ok: guess) for network voltages. We may partition Equation ??? as:

$$\mathbf{S}_k = \mathbf{V}_k \sum_{j \neq k} \mathbf{Y}_{jk}^* \mathbf{V}_j^* + \mathbf{V}_k \mathbf{Y}_{kk}^* \mathbf{V}_k^* \tag{5.3.1}$$

Noting that $\mathbf{S}_k = P_k + jQ_k$, we can solve for $\mathbf{V}_k^*$ and, taking the complex conjugate of that, we have an expression for $\mathbf{V}_k$ in terms of all of the voltages of the network, P_k and Q_k:

$$\mathbf{V}_k = \frac{1}{\mathbf{Y}_{kk}} \left(\frac{P_k - jQ_k}{\mathbf{V}_k^*} - \sum_{j \neq k} \mathbf{Y}_{jk} \mathbf{V}_j \right) \tag{5.3.2}$$

Expression Equation 5.3.2 is a better estimate of $\mathbf{V}_k$ than we started with. The solution to the set of nonlinear equations consists of carrying out this expression, repeatedly, for all of the buses of the network.

An iterative procedure in which a correction for each of the voltages of the network is computed in one step, and the corrections applied all at once is called Gaussian Iteration. If, on the other hand, the improved variables are used immediately, the procedure is called **Gauss–Seidel Iteration**.

Note that Equation 5.3.2 uses as its constraints P and Q for the bus in question. Thus it is useable directly for load type buses. For other types of bus constraints, modifications are required. We consider only two of many possible sets of constraints.

For generator buses, usually the real power and terminal voltage magnitude are specified. At each time step it is necessary to come out with a terminal voltage of specified magnitude: voltage phase angle and reactive power Q are the unknowns. One way of handling this situation is to:

1. Generate an estimate for reactive power Q, then
2. Use Equation 5.3.2 to generate an estimate for terminal voltage, and finally,
3. Holding voltage phase angle constant, adjust magnitude to the constraint.

At any point in the iteration, reactive power is:

$$Q_k = \mathrm{Im} \left\{ \mathbf{V}_k \sum_{j=1}^{N} \mathbf{Y}_{jk}^* \mathbf{V}_j^* \right\} \tag{5.3.3}$$

It should be noted that there are other ways of doing this calculation. Generally they are more work to set up but often converge more quickly. Newton's method and variations are good examples.

For buses loaded by constant impedance, it is sufficient to lump the load impedance into the network. That is, the load admittance goes directly in parallel with the driving point admittance at the node in question.

These three bus constraint types, generator, load and constant impedance are sufficient for handling most problems of practical importance.

This page titled 5.3: Gauss–Seidel Iterative Technique is shared under a CC BY-NC-SA 4.0 license and was authored, remixed, and/or curated by James Kirtley (MIT OpenCourseWare) via source content that was edited to the style and standards of the LibreTexts platform.

5.4: Example- Simple–Minded Program

Attached to this note is a MATLAB script which will set up carry out the Gauss–Seidel procedure for networks with the simple constraints described here. The script is self-explanatory and carries out the load flow described by the simple example below.

Note that, as with many nonlinear equation solvers, success sometimes requires having an initial guess for the solution which is reasonably close to the final solution.

This page titled 5.4: Example- Simple–Minded Program is shared under a CC BY-NC-SA 4.0 license and was authored, remixed, and/or curated by James Kirtley (MIT OpenCourseWare) via source content that was edited to the style and standards of the LibreTexts platform.

5.5: Example

Consider the system shown in Figure 1. This simple system has five buses (numbered 1 through 5) and four lines. Two of the buses are connected to generators, two to loads and bus 5 is the “swing bus”, represented as an “infinite bus”, or voltage supply.

For the purpose of this excercise, assume that the line impedances are:

$$\begin{aligned}\mathbf{Z}_0 &= .05 + j.1\\ \mathbf{Z}_1 &= .05 + j.05\\ \mathbf{Z}_2 &= .15 + j.2\\ \mathbf{Z}_3 &= .04 + j.12\end{aligned} \tag{5.5.1}$$

We also specify real power and voltage magnitude for the generators and real and reactive power for the loads:

- Bus 1: Real power is 1, voltage is 1.05 per-unit
- Bus 2: Real power is 1, voltage is 1.00 per-unit
- Bus 3: Real power is -.9 per-unit, reactive power is 0
- Bus 4: Real power is -1, reactive power is -.2 per-unit.

Note that load power is taken to be negative, for this simple-minded program assumes all power is measured into the network.

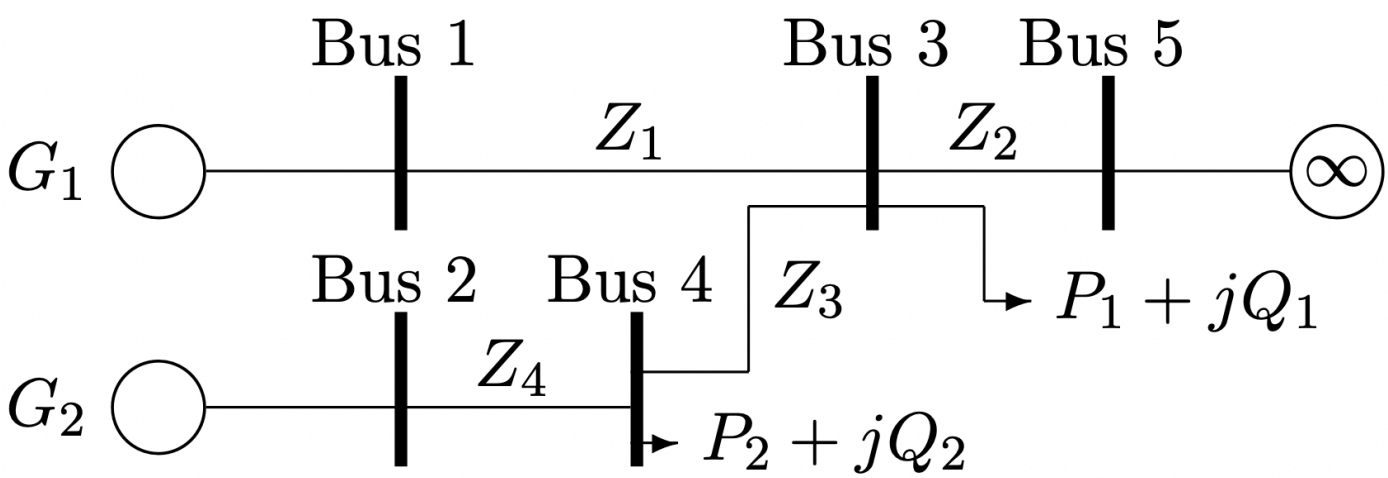

Figure 1: Sample System

```
% Simple-Minded Load Flow Example

% First, impedances

Z1=.05+j*.1;

Z2=.05+j*.05;

Z3=.15+j*.2;

Z4=.04+j*.12;

% This is the node-incidence Matrix

NI=[1 0 0 0 ; 0 0 0 1 ; -1 1 1 0 ; 0 0 -1 -1 ; 0 -1 0 0];

% This is the vector of "known" voltage magnitudes
```

```
VNM = [1.05 1 0 0 1]';

% And the vector of known voltage angles

VNA = [0 0 0 0 0]';

% and this is the "key" to which are actually known

KNM = [1 1 0 0 1]';

KNA = [0 0 0 0 1]';

% and which are to be manipulated by the system

KUM = 1 - KNM;

KUA = 1 - KNA;

% Here are the known loads (positive is INTO network

% Use zeros for unknowns

P=[1 1 -.9 -1 0]';

Q=[0 0 0 -.2 0]';

% and here are the corresponding vectors to indicate

% which elements should be checked in error checking

PC = [1 1 1 1 0]';

QC = [0 0 1 1 0]';

Check = KNM + KNA + PC + QC;

% Unknown P and Q vectors

PU = 1 - PC;

QU = 1 - QC;

fprintf('Here is the line admittance matrix:\n');

Y=[1/Z1 0 0 0;0 1/Z2 0 0;0 0 1/Z3 0;0 0 0 1/Z4]

% Construct Node-Admittance Matrix

fprintf('And here is the bus admittance matrix\n')

YN=NI*Y*NI'

% Now: here are some starting voltage magnitudes and angles

VM = [1.05 1 .993 .949 1]';

VA = [.0965 .146 .00713 .0261 0]';

% Here starts a loop

Error = 1;
```

```
Tol=1e-10;

N = length(VNM);

% Construct a candidate voltage from what we have so far

VMAG = VNM .* KNM + VM .* KUM;

VANG = VNA .* KNA + VA .* KUA;

V = VMAG .* exp(j .* VANG);

% and calculate power to start

I = (YN*V);

PI = real(V .* conj(I));

QI = imag(V .* conj(I));

%pause

while(Error>Tol);

for i=1:N, % Run through all of the buses

% What we do depends on what bus!

if (KUM(i) == 1) & (KUA(i) == 1), % don't know voltage magnitude or angle

pvc= (P(i)-j*Q(i))/conj(V(i));

for n=1:N,

if n ~=i, pvc = pvc - (YN(i,n) * V(n)); end

end

V(i) = pvc/YN(i,i);

elseif (KUM(i) == 0) & (KUA(i) == 1), % know magnitude but not angle

% first must generate an estimate for Q

Qn = imag(V(i) * conj(YN(i,:)*V));

pvc= (P(i)-j*Qn)/conj(V(i));

for n=1:N,

if n ~=i, pvc = pvc - (YN(i,n) * V(n)); end

end

pv=pvc/YN(i,i);

V(i) = VM(i) * exp(j*angle(pv));

end % probably should have more cases

end % one shot through voltage list: check error
```

```
% Now calculate currents indicated by this voltage expression

I = (YN*V);

% For error checking purposes, compute indicated power

PI = real(V .* conj(I));

QI = imag(V .* conj(I));

% Now we find out how close we are to desired conditions

PERR = (P-PI) .* PC;

QERR = (Q-QI) .* QC;

Error = sum(abs(PERR) .^2 + abs(QERR) .^2);

end

fprintf('Here are the voltages\n')

V

fprintf('Real Power\n')

P

fprintf('Reactive Power\n')

Q
```

This page titled 5.5: Example is shared under a CC BY-NC-SA 4.0 license and was authored, remixed, and/or curated by James Kirtley (MIT OpenCourseWare) via source content that was edited to the style and standards of the LibreTexts platform.

6: MAGNETIC CIRCUIT ANALOG TO ELECTRIC CIRCUITS

Introduction

In this chapter we describe an equivalence between electric and magnetic circuits and in turn a method of describing and analyzing magnetic field systems which can be described in magnetic circuit fashion. As it turns out, the equivalence is a fair approximation to reality and may be used with some confidence.

Magnetic circuits are those parts of devices that employ magnetic flux to either induce voltage or produce force. Such devices include transformers, motors, generators and other actuators (including things such as solenoid actuators and loudspeakers). In such devices it is necessary to produce and guide magnetic flux. This is usually done with pieces of ferromagnetic material (which has permeability very much larger than free space). In this sense, magnetic circuits are like electric circuits in which conductive material such as aluminum or copper has high electric conductivity and are used to guide electric current.

The analogies between electric and magnetic circuits are two: the electric circuit quantity of current is analogous to magnetic circuit quantity flux. (Both of these quantities are 'solenoidal' in the sense that they have no divergence). The electric circuit quantity of voltage, or electomotive force (EMF) is analogous to the magnetic circuit quantity of magnetomotive force (MMF). EMF is the integral of electric field $\vec{E}$, MMF is the integral of magnetic field $\vec{H}$.

6.1: Electric Circuits and Kirchoff's Laws

6.2: Magnetic Circuits

6.3: Faraday's Law and Inductance

This page titled 6: Magnetic circuit analog to electric circuits is shared under a CC BY-NC-SA 4.0 license and was authored, remixed, and/or curated by James Kirtley (MIT OpenCourseWare) via source content that was edited to the style and standards of the LibreTexts platform.

6.1: Electric Circuits and Kirchoff's Laws

Conservation of Charge and KCL

To begin with, consider the law of Conservation of Charge:

$$\oiint \vec{J} \cdot d\vec{a} = \frac{d}{dt} \int_{\text{vol}} q dv = 0$$

This assumes, of course, that there is no accumulation of charge anywhere in the system. This is not a wonderful assumption for any systems with capacitor plates, but if one considers capacitors to be circuit elements so that both plates of a capacitor are part of any given element the right hand side of this expression really is zero.

Thsn, if we note current to be the integral of current density: Over some area, a fraction of the whole area around a node:

$$i_k = \iint_{A_k} \vec{J} \cdot d\vec{a}$$

then we have:

$$\sum_k i_k = 0$$

Faraday's Law

$$\oint \vec{E} \cdot d\vec{\ell} = -\frac{d}{dt} \iint \vec{B} \cdot d\vec{a}$$

The left-hand integral may be taken to be a number of sub-integrals, each denoted by a discrete fractional integral:

$$v_k = \int_{a_k}^{b_k} \vec{E} \cdot d\ell$$

If we assume that there are no substantive flux linkages among the circuit elements:

$$\iint \vec{B} = 0$$

then we have KVL:

$$\sum_k v_k = 0$$

Faraday's Law

$$\oint \vec{E} \cdot d\vec{\ell} = -\frac{d}{dt} \iint \vec{B} \cdot d\vec{a}$$

The left-hand integral may be taken to be a number of sub-integrals, each denoted by a discrete fractional integral:

$$v_k = \int_{a_k}^{b_k} \vec{E} \cdot d\ell$$

If we assume that there are no substantive flux linkages among the circuit elements:

$$\iint \vec{B} = 0$$

then we have KVL:

$$\sum_k v_k = 0$$

Ohm's Law

At this point it is probably appropriate to note that Ohm's Law can be used to derive the constitutive relationship for a resistor. Suppose we have a conductive element similar to the rectangular solid shown in Figure 1. Assume current is confined in this element and flowing perpendicular to the flat end shown in the figure. Current density is

$$J_x = \frac{I}{hw}$$

where I is to total current and h and w are height and width of the conductor, respectively. Electric field along the length of the element is:

$$E_x = \frac{J_x}{\sigma}$$

where σ is the electrical conductivity of the material. Voltage developed is:

$$v_k = \int E_x d\ell = \frac{J_x}{\sigma} l$$

Which leads us to an expression for element resistance:

$$R = \frac{v}{I} = \frac{l}{hw\sigma}$$

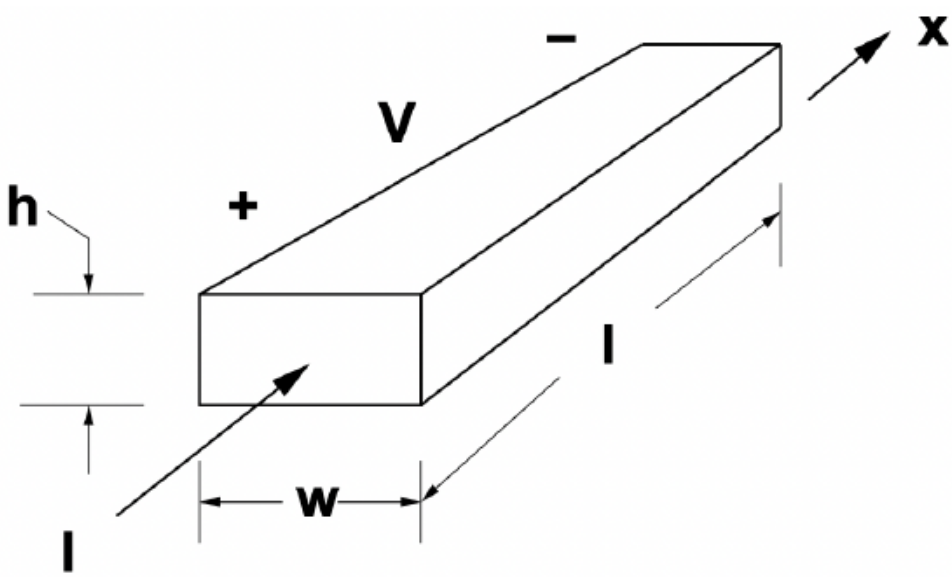

Figure 1: Simple circuit element

This page titled 6.1: Electric Circuits and Kirchoff's Laws is shared under a CC BY-NC-SA 4.0 license and was authored, remixed, and/or curated by James Kirtley (MIT OpenCourseWare) via source content that was edited to the style and standards of the LibreTexts platform.

6.2: Magnetic Circuits

As it turns out, magnetic circuits are very similar and are governed by laws that are not at all different from those of electric circuits, with only one minor difference.

Conservation of Flux: Gauss' Law

To start, Gauss' law is:

$$\oiint \vec{B} \cdot d\vec{a} = 0$$

This reflects that notion that there are no sources of flux: this is a truely sinusoidal quantity. It neither begins nor ends but just goes in circles.

If we note a fraction of the surface around a node and call it surface k, the flux through that surface is:

$$\Phi_k = \iint_{A_k} \vec{B} \cdot d\vec{a}$$

If we take the sum of all partial fluxes through a surface surrounding a note we come to the analog of KCL:

$$\sum_k \Phi_k = 0$$

MMF: Ampere's Law

Ampere's Law is simply stated as:

$$\oint \vec{H} \cdot d\ell = \iint \vec{J} \cdot d\vec{a}$$

The integral of current density $\vec{J}$ is current, quantified in the SI system as Amperes. As it is generally carried in wires which might number, say , N, it is often quantified as:

$$\iint \vec{J} \cdot d\vec{a} = NI$$

For this we will often use the term MagnetoMotive Force or MMF, which gets the symbol F. If we use that symbol to denote the integral of magnetic field over a magnetic circuit element:

$$F_k = \int_{a_k}^{b_k} \vec{H} \cdot d\vec{\ell}$$

Then, if we take enough of these subintegrals to cover the loop around a group of elements, we have

$$\sum_k F_k = NI$$

Note that this is not exactly the same as KVL, as it has a source term on the right.

Magnetic Circuit Element: Analogy to Ohm's Law

Magnetic circuits have an equivalent to resistance. It is the ratio of MMF to flux and has the symbol $\mathcal{R}$. I direct comparison with the derivation of resistance, a magnetic circuit element is shown in Figure 2.

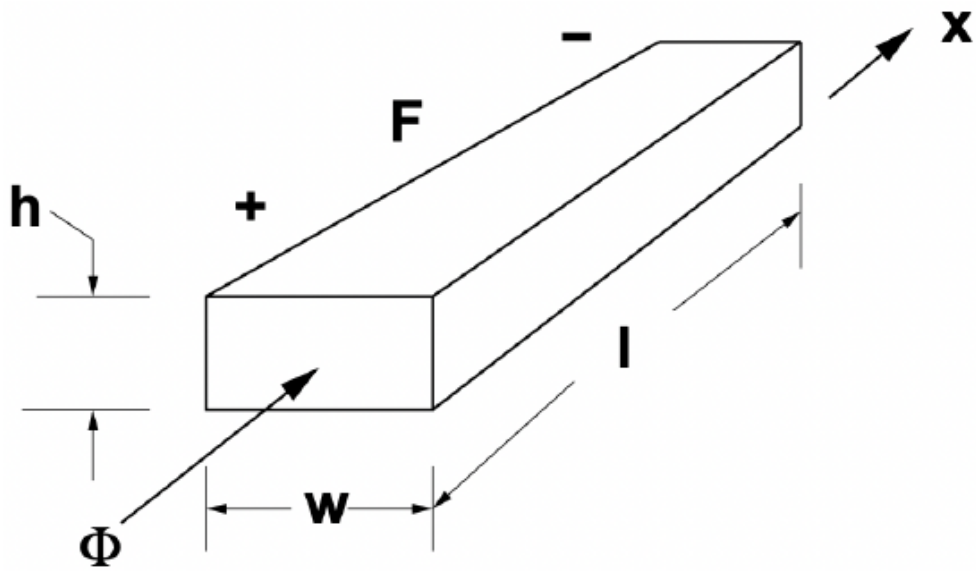

Figure 2: Magnetic circuit element

Assume that the material of this element has permeability $\mu > \mu_0$, so that it has a constitutive relationship:

$$B_x = \mu H_x$$

If flux density in the material is uniform, total flux through the element is:

$$\Phi = hwB_x = hw\mu H_x$$

And the MMF is simply the integral of magnetic field H from one end to the other: again we assume uniformity so that:

$$F = \ell H_x$$

The reluctance of this element is then:

$$\mathcal{R} = \frac{F}{\Phi} = \frac{\ell}{hw\mu}$$

Magnetic Gaps

In reality, magnetic circuits tend to be made up of very highly permeable elements (pieces of iron) and relatively small air-gaps. A sketch of such a gap is shown in Figure 3.

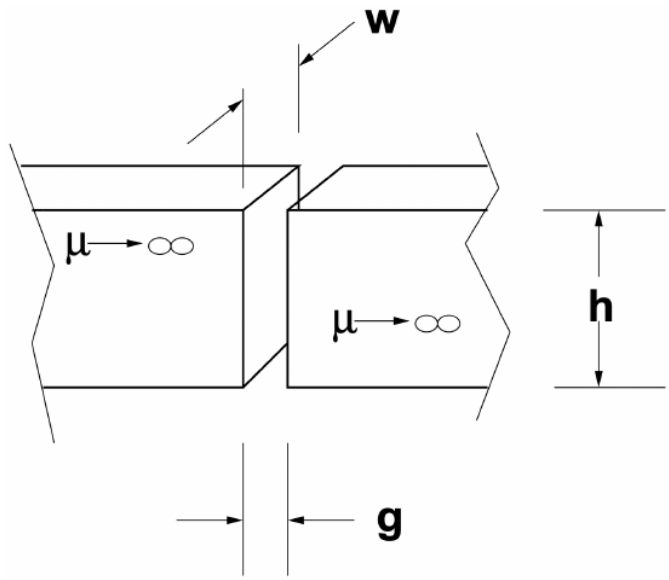

Figure 3: Gap between magnetic elements

It is usually permissible to assume that iron elements have very high permeability $(\mu \to \infty)$, so that there is negligible MMF drop. In this sense the iron elements serve in the same role as copper or aluminum wire in electric circuits. The gap, on the other hand, has reluctance:

$$\mathcal{R}_g = \frac{g}{hw\mu_0}$$

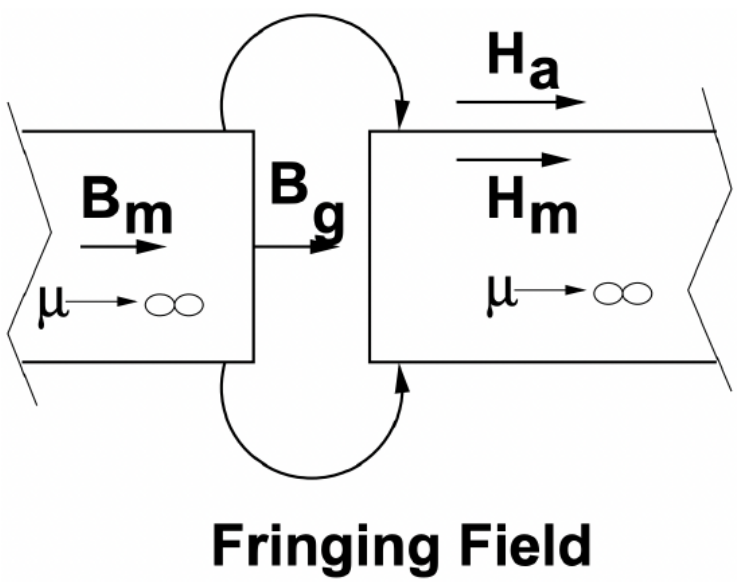

Figure 4: Gap details

Boundary Conditions

Shown in Figure 4 is the cross-section of a gap. It is assumed that the elements shown have some depth into the paper which is greater than the gap width g. If the permeability of the elements to the right and the left is very high, we say that magnetic flux is largely confined to those elements. Note that the boundary condition associated with Ampere's Law dictates that the magnetic field intensity H_a in the air adjacent to the permeable material and parallel with the surface must be equal to the magnetic field intensity H_m just inside the magnetic material and parallel with the surface. If the material is very highly permeable $(\mu \to \infty)$, that magnetic field must be nearly zero: $H_a = H_m \to 0$. This means that magnetic field must be perpendicular to the surface of very highly permeable material. This is the case in the gap itself, where:

$$B_g = B_m$$

We should note, however, that there will be 'fringing' fields in the region near the gap, so that our expression for the reluctance of the gap will not be quite correct. The accuracy of the expression which ignores fringing is best for really small gaps and generally over-estimates the reluctance.

This page titled 6.2: Magnetic Circuits is shared under a CC BY-NC-SA 4.0 license and was authored, remixed, and/or curated by James Kirtley (MIT OpenCourseWare) via source content that was edited to the style and standards of the LibreTexts platform.

6.3: Faraday's Law and Inductance

Changing magnetic fields give rise to electric fields and consequently produce voltage. This is how inductance works. Consider the situation shown rather abstractly in Figure 5.

Faraday's Law is, in integral form:

$$\oint \vec{E} \cdot d\ell = -\frac{d}{dt} \iint_{\text{Area}} \vec{B} \cdot \vec{n} da$$

If the contour shown is highly conducting (say, if it is a wire), there is zero electric field over that part of the contour. Voltage across the terminals is:

$$V_{ab} = \int_a^b \vec{E} \cdot d\ell$$

and that is the whole of the integral above. Thus we may conclude that:

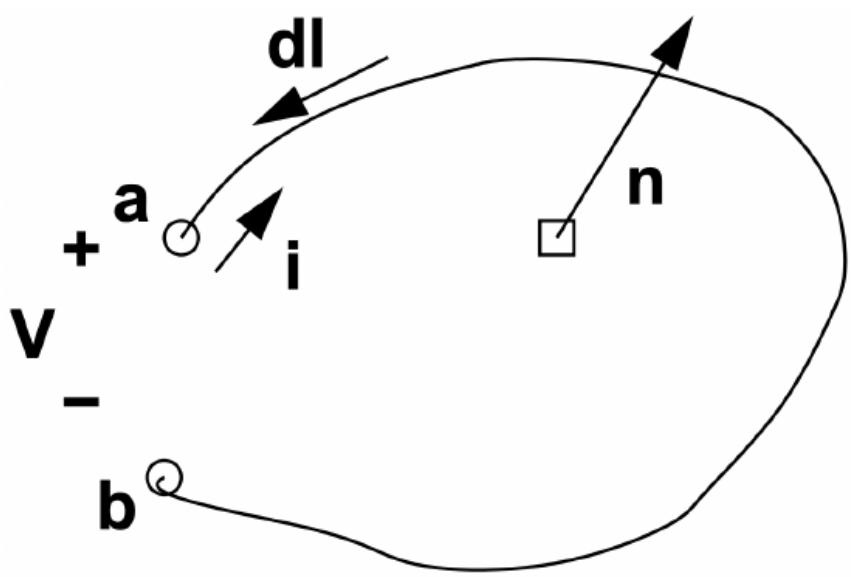

Figure 5: Loop for Faraday's Law

$$V_{ab} = -\frac{d}{dt} \iint_{\text{Area}} \vec{B} \cdot \vec{n} da$$

Now, if we define flux linked by this contour to be:

$$\lambda = -\iint_{\text{Area}} \vec{B} \cdot \vec{n} da$$

then voltage is, as we expect:

$$V_{ab} = \frac{d\lambda}{dt}$$

As it turns out, current flowing in the wire with sense shown by i in Figure 5 tends to produce flux with sense opposite to the normal vector shown in that figure, and so produces positive flux. Generally, in calculating inductance, one uses the 'right hand rule' in determing the direction of flux linkage: if the fingers of your right hand follow the direction of the winding, from the positive terminal, positive flux is in the direction of your thumb.

Example: Solenoid Actuator

Shown in Figure 6 is a representation of a common solenoid actuator. When current is put through the coil a magnetic flux appears in the gaps and pulls the plunger to the left. We will examine the force and how to calculate it in later chapters. For

now, however, we are concerned with magnetic fields in the device and with the calculation of inductance. Assume that the stator and plunger are both made of highly permeable materials $(\mu \to \infty)$. If the coil carries current I in N turns in the sense shown, magnetic flux will cross the narrow air-gap to the right in the direction from the stator to the plunger and then return in the sense shown in the variable length gap of width x. It is clear that this is also positive sense flux for the coil.

The magnetic circuit equivalent is shown in Figure 7. All of the flux produced crosses the variable width gap which has reluctance:

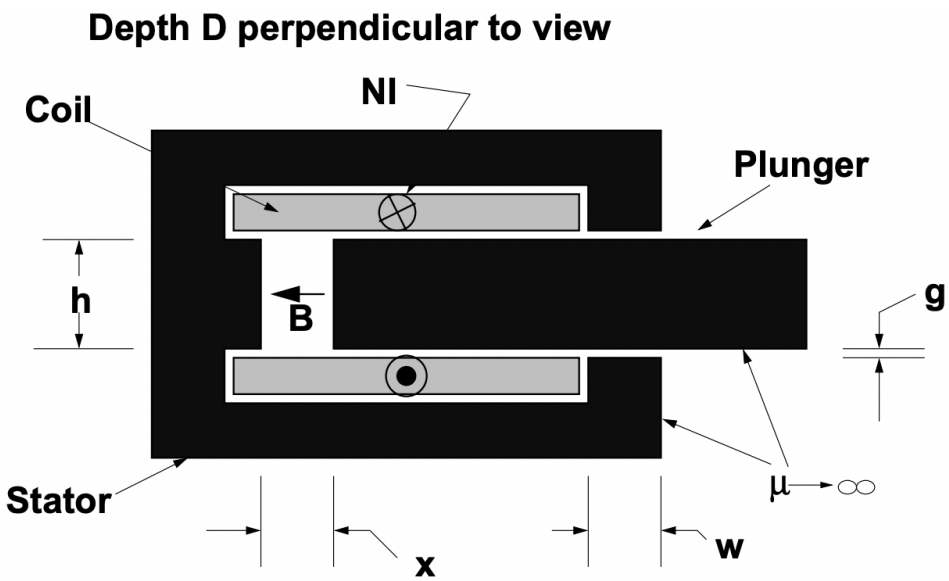

Figure 6: Cross-Section of Solenoid Actuator

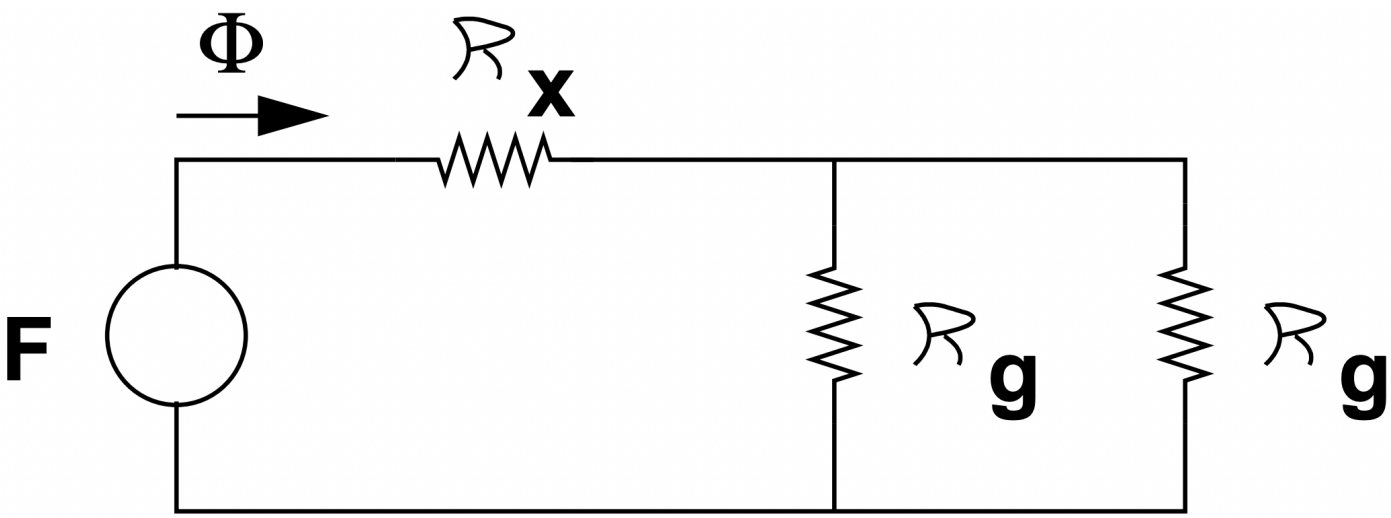

Figure 7: Magnetic Equivalent Circuit of Solenoid Actuator

$$\mathcal{R}_x = \frac{x}{\mu_0 h D}$$

Half of the flux crosses each of the other two gaps, which are in parallel and have reluctance:

$$\mathcal{R}_g = \frac{g}{\mu_0 w D}$$

Total flux in the magnetic circuit is

$$\Phi = \frac{F}{\mathcal{R}_x + \frac{1}{2}\mathcal{R}_g}$$

And since $\lambda = N\Phi$ and $F = NI$, the inductance of this structure is:

$$L = \frac{N^2}{\mathcal{R}} = \frac{N^2}{\mathcal{R}_x + \frac{1}{2}\mathcal{R}_g}$$

This page titled 6.3: Faraday's Law and Inductance is shared under a CC BY-NC-SA 4.0 license and was authored, remixed, and/or curated by James Kirtley (MIT OpenCourseWare) via source content that was edited to the style and standards of the LibreTexts platform.

7: Power electric motor drives

This page titled 7: Power electric motor drives is shared under a CC BY-NC-SA 4.0 license and was authored, remixed, and/or curated by James Kirtley (MIT OpenCourseWare) via source content that was edited to the style and standards of the LibreTexts platform.

8: ELECTROMAGNETIC FORCES AND LOSS MECHANISMS

Introduction

This section of notes discusses some of the fundamental processes involved in electric machinery. In the section on energy conversion processes we examine the two major ways of estimating electromagnetic forces: those involving thermodynamic arguments (conservation of energy) and field methods (Maxwell's Stress Tensor). In between these two explications is a bit of description of electric machinery, primarily there to motivate the description of field based force calculating methods.

The subsection of the notes dealing with losses is really about eddy currents in both linear and nonlinear materials and about semi-empirical ways of handling iron losses and exciting currents in machines.

8.1: Energy Conversion Process-

8.2: Tying the MST and Poynting Approaches Together

8.3: Simple Description of a Linear Induction Motor

8.4: Surface Impedance of Uniform Conductors

8.5: Iron

8.6: Semi-Empirical Method of Handling Iron Loss

This page titled 8: Electromagnetic forces and loss mechanisms is shared under a CC BY-NC-SA 4.0 license and was authored, remixed, and/or curated by James Kirtley (MIT OpenCourseWare) via source content that was edited to the style and standards of the LibreTexts platform.

8.1: Energy Conversion Process-

In a motor the energy conversion process can be thought of in simple terms. In “steady state”, electric power input to the machine is just the sum of electric power inputs to the different phase terminals:

$$P_e = \sum_i v_i i_i$$

Mechanical power is torque times speed:

$$P_m = T\Omega$$

And the sum of the losses is the difference:

$$P_d = P_e - P_m$$

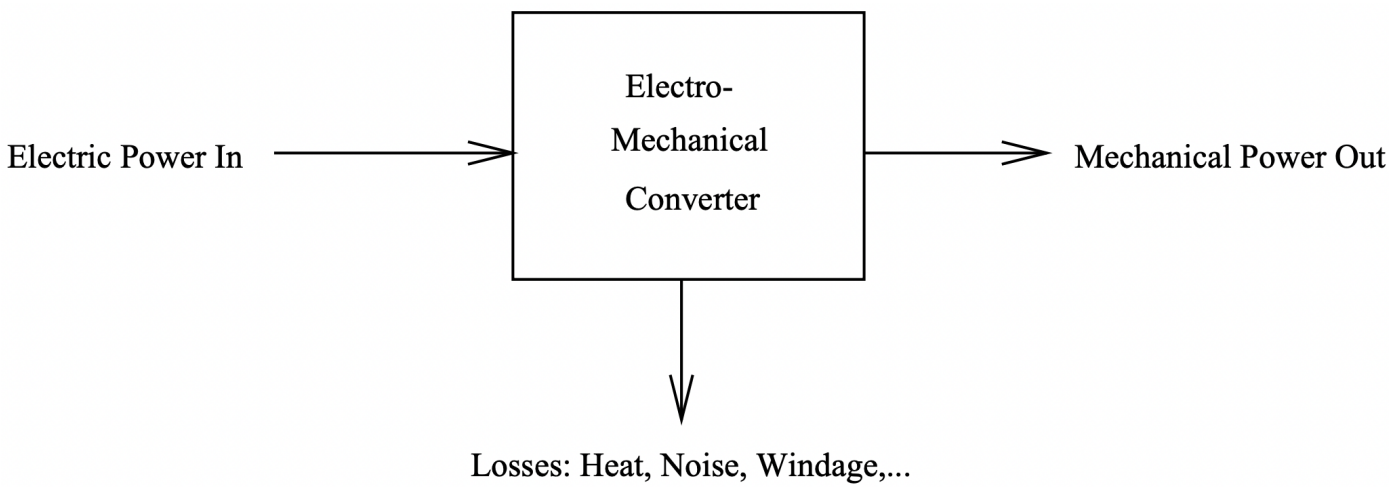

Figure 1: Energy Conversion Process

It will sometimes be convenient to employ the fact that, in most machines, dissipation is small enough to approximate mechanical power with electrical power. In fact, there are many situations in which the loss mechanism is known well enough that it can be idealized away. The “thermodynamic” arguments for force density take advantage of this and employ a “conservative” or lossless energy conversion system.

Energy Approach to Electromagnetic Forces:

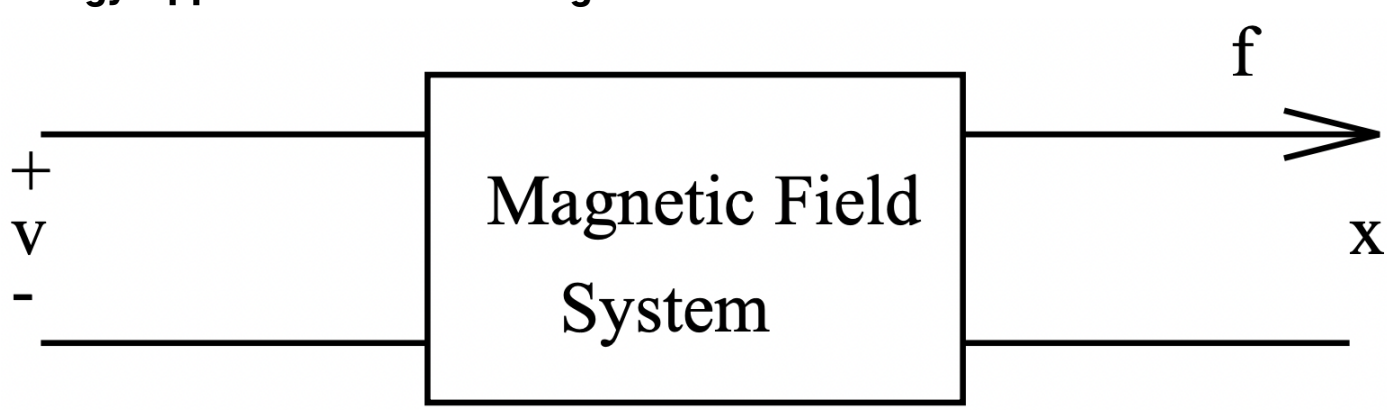

Figure 2: Conservative Magnetic Field System

To start, consider some electromechanical system which has two sets of “terminals”, electrical and mechanical, as shown in

Figure 2. If the system stores energy in magnetic fields, the energy stored depends on the state of the system, defined by (in this case) two of the identifiable variables: flux (λ), current (i) and mechanical position (x). In fact, with only a little reflection, you should be able to convince yourself that this state is a single-valued function of two variables and that the energy stored is independent of how the system was brought to this state.

Now, all electromechanical converters have loss mechanisms and so are not themselves conservative. However, the magnetic field system that produces force is, in principle, conservative in the sense that its state and stored energy can be described by only two variables. The "history" of the system is not important.

It is possible to chose the variables in such a way that electrical power into this conservative system is:

$$P^e = vi = i\frac{d\lambda}{dt}$$

Similarly, mechanical power out of the system is:

$$P^m = f^e\frac{dx}{dt}$$

The difference between these two is the rate of change of energy stored in the system:

$$\frac{dW_m}{dt} = P^e - P^m$$

It is then possible to compute the change in energy required to take the system from one state to another by:

$$W_m(a) - W_m(b) = \int_b^a i d\lambda - f^e dx$$

where the two states of the system are described by $a = (\lambda_a, x_a)$ and $b = (\lambda_b, x_b)$

If the energy stored in the system is described by two state variables, λ and x, the total differential of stored energy is:

$$dW_m = \frac{\partial W_m}{\partial \lambda}d\lambda + \frac{\partial W_m}{\partial x}dx$$

and it is also:

$$dW_m = id\lambda - f^e dx$$

So that we can make a direct equivalence between the derivatives and:

$$f^e = -\frac{\partial W_m}{\partial x}$$

This generalizes in the case of multiple electrical terminals and/or multiple mechanical terminals. For example, a situation with multiple electrical terminals will have:

$$dW_m = \sum_k i_k d\lambda_k - f^e dx$$

And the case of rotary, as opposed to linear, motion has in place of force f^e and displacement x, torque T^e and angular displacement θ.

In many cases we might consider a system which is electricaly linear, in which case inductance is a function only of the mechanical position x.

$$\lambda(x) = L(x)i$$

In this case, assuming that the energy integral is carried out from $\lambda = 0$ (so that the part of the integral carried out over x is zero),

$$W_m = \int_0^\lambda \frac{1}{L(x)}\lambda d\lambda = \frac{1}{2}\frac{\lambda^2}{L(x)}$$

This makes

$$f^e = -\frac{1}{2}\lambda^2\frac{\partial}{\partial x}\frac{1}{L(x)}$$

Note that this is numerically equivalent to

$$f^e = -\frac{1}{2} i^2 \frac{\partial}{\partial x} L(x)$$

This is true only in the case of a linear system. Note that substituting $L(x)i = \lambda$ too early in the derivation produces erroneous results: in the case of a linear system it is a sign error, but in the case of a nonlinear system it is just wrong.

Coenergy

We often will describe systems in terms of inductance rather than its reciprocal, so that current, rather than flux, appears to be the relevant variable. It is convenient to derive a new energy variable, which we will call co-energy, by:

$$W_m' = \sum_i \lambda_i i_i - W_m$$

and in this case it is quite easy to show that the energy differential is (for a single mechanical variable) simply:

$$dW_m' = \sum_k \lambda_k di_k + f^e dx$$

so that force produced is:

$$f_e = \frac{\partial W_m'}{\partial x}$$

Consider a simple electric machine example in which there is a single winding on a rotor (call it the field winding and a polyphase armature. Suppose the rotor is round so that we can describe the flux linkages as:

$$\begin{aligned}
\lambda_a &= L_a i_a + L_{ab} i_b + L_{ab} i_c + M\cos(p\theta) i_f \\
\lambda_b &= L_{ab} i_a + L_a i_b + L_{ab} i_c + M\cos\left(p\theta - \tfrac{2\pi}{3}\right) i_f \\
\lambda_c &= L_{ab} i_a + L_{ab} i_b + L_a i_c + M\cos\left(p\theta + \tfrac{2\pi}{3}\right) i_f \\
\lambda_f &= M\cos(p\theta) i_a + M\cos\left(p\theta - \tfrac{2\pi}{3}\right) i_b + M\cos\left(p\theta + \tfrac{2\pi}{3}\right) + L_f i_f
\end{aligned}$$

Now, this system can be simply described in terms of coenergy. With multiple excitation it is important to exercise some care in taking the coenergy integral (to ensure that it is taken over a valid path in the multi-dimensional space). In our case there are actually five dimensions, but only four are important since we can position the rotor with all currents at zero so there is no contribution to coenergy from setting rotor position. Suppose the rotor is at some angle θ and that the four currents have values i_{a0}, i_{b0}, i_{c0} and i_{f0}. One of many correct path integrals to take would be:

$$\begin{aligned}
W_m' &= \int_0^{i_{a0}} L_a i_a di_a \\
&+ \int_0^{i_{b0}} \left(L_{ab} i_{a0} + L_a i_b\right) di_b \\
&+ \int_0^{i_{c0}} \left(L_{ab} i_{a0} + L_{ab} i_{b0} + L_a i_c\right) di_c \\
&+ \int_0^{i_{f0}} \left(M\cos(p\theta) i_{a0} + M\cos\left(p\theta - \tfrac{2\pi}{3}\right) i_{b0} + M\cos\left(p\theta + \tfrac{2\pi}{3}\right) i_{c0} + L_f i_f\right) di_f
\end{aligned}$$

The result is:

$$\begin{aligned}
W_m' = &\frac{1}{2} L_a \left(i_{a0}^2 + i_{b0}^2 + i_{co}^2\right) + L_{ab}\left(i_{ao} i_{b0} + i_{ao} i_{c0} + i_{co} i_{b0}\right) \\
&+ M i_{f0} \left(i_{a0}\cos(p\theta) + i_{b0}\cos\left(p\theta - \frac{2\pi}{3}\right) + i_{c0}\cos\left(p\theta + \frac{2\pi}{3}\right)\right) + \frac{1}{2} L_f i_{f0}^2
\end{aligned}$$

If there is no variation of the stator inductances with rotor position θ, (which would be the case if the rotor were perfectly round), the terms that involve L_a and $L_(ab)$ contribute zero so that torque is given by:

$$T_e = \frac{\partial W_m'}{\partial \theta} = -pMi_{f0}\left(i_{a0}\sin(p\theta) + i_{b0}\sin\left(p\theta - \tfrac{2\pi}{3}\right) + i_{co}\sin\left(p\theta + \tfrac{2\pi}{3}\right)\right)$$

We will return to this type of machine in subsequent chapters.

Continuum Energy Flow

At this point, it is instructive to think of electromagnetic energy flow as described by Poynting's Theorem:

$$\vec{S} = \vec{E} \times \vec{H}$$

Energy flow $\vec{S}$, called Poynting's Vector, describes electromagnetic power in terms of electric and magnetic fields. It is power density: power per unit area, with units in the SI system of units of watts per square meter.

To calculate electromagnetic power into some volume of space, we can integrate Poyting's Vector over the surface of that volume, and then using the divergence theorem:

$$P = -\oiint \vec{S} \cdot \vec{n} da = -\int_{\mathrm{VOl}} \nabla \cdot \vec{S} dv$$

Now, the divergence of the Poynting Vector is, using a vector identity:

$$\begin{aligned} \nabla \cdot \vec{S} &= \nabla \cdot (\vec{E} \times \vec{H}) = \vec{H} \cdot \nabla \times \vec{E} - \vec{E} \cdot \nabla \times \vec{H} \\ &= -\vec{H} \cdot \frac{\partial \vec{B}}{\partial t} - \vec{E} \cdot \vec{J} \end{aligned}$$

The power crossing into a region of space is then:

$$P = \int_{\mathrm{vol}} \left(\vec{E} \cdot \vec{J} + \vec{H} \cdot \tfrac{\partial \vec{B}}{\partial t} \right) dv$$

Now, in the absence of material motion, interpretation of the two terms in this equation is fairly simple. The first term describes dissipation:

$$\vec{E} \cdot \vec{J} = |\vec{E}|^2 \sigma = |\vec{J}|^2 \rho$$

The second term is interpreted as rate of change of magnetic stored energy. In the absence of hysteresis it is:

$$\tfrac{\partial W_m}{\partial t} = \vec{H} \cdot \tfrac{\partial \vec{B}}{\partial t}$$

Note that in the case of free space,

$$\vec{H} \cdot \tfrac{\partial \vec{B}}{\partial t} = \mu_0 \vec{H} \cdot \tfrac{\partial \vec{H}}{\partial t} = \tfrac{\partial}{\partial t} \left(\tfrac{1}{2} \mu_0 |\vec{H}|^2 \right)$$

which is straightforwardedly interpreted as rate of change of magnetic stored energy density:

$$W_m = \tfrac{1}{2} \mu_0 |H|^2$$

Some materials exhibit hysteretic behavior, in which stored energy is not a single valued function of either $\vec{B}$ or $\vec{H}$, and we will consider that case anon.

Material Motion

In the presence of material motion $\vec{v}$, electric field $\overrightarrow{E'}$ in a "moving" frame is related to electric field $\vec{E}$ in a "stationary" frame and to magnetic field $\vec{B}$ by:

$$\vec{E}' = \vec{E} + \vec{v} \times \vec{B}$$

This is an experimental result obtained by observing charged particles moving in combined electric and magnetic fields. It is a relatavistic expression, so that the qualifiers "moving" and "stationary" are themselves relative. The electric fields are what would be observed in either frame. In MQS systems, the magnetic flux density $\vec{B}$ is the same in both frames.

The term relating to current density becomes:

$$\vec{E} \cdot \vec{J} = \left(\vec{E}' - \vec{v} \times \vec{B}\right) \cdot \vec{J}$$

We can interpret $\vec{E}' \cdot \vec{J}$ as dissipation, but the second term bears a little examination. Note that it is in the form of a vector triple (scalar) product:

$$-\vec{v} \times \vec{B} \cdot \vec{J} = -\vec{v} \cdot \vec{B} \times \vec{J} = -\vec{v} \cdot \vec{J} \times \vec{B}$$

This is in the form of velocity times force density and represents power conversion from electromagnetic to mechanical form. This is consistent with the Lorentz force law (also experimentally observed):

$$\vec{F} = \vec{J} \times \vec{B}$$

This last expression is yet another way of describing energy conversion processes in electric machinery, as the component of apparent electric field produced by material motion through a magnetic field, when reacted against by a current, produces energy conversion to mechanical form rather than dissipation.

Additional Issues in Energy Methods

There are two more important and interesting issues to consider as we study the development of forces of electromagnetic origin and their calculation using energy methods. These concern situations which are not simply representable by lumped parameters and situations that involve permanent magnets.

Coenergy in Continuous Media

Consider a system with not just a multiplicity of circuits but a continuum of current-carrying paths. In that case we could identify the co-energy as:

$$W_m' = \int_{\text{area}} \int \lambda(\vec{a}) d\vec{J} \cdot d\vec{a}$$

where that area is chosen to cut all of the current carrying conductors. This area can be picked to be perpedicular to each of the current filaments since the divergence of current is zero. The flux λ is calculated over a path that coincides with each current filament (such paths exist since current has zero divergence). Then the flux is:

$$\lambda(\vec{a}) = \int \vec{B} \cdot d\vec{n}$$

Now, if we use the vector potential $\vec{A}$ for which the magnetic flux density is:

$$\vec{B} = \nabla \times \vec{A}$$

the flux linked by any one of the current filaments is:

$$\lambda(\vec{a}) = \oint \vec{A} \cdot d\vec{\ell}$$

Now: it is possible to make $d\vec{\ell}$ coincide with $d\vec{a}$ and be parallel to the current filaments, so that:

$$W_m' = \int_{\text{Vol}} \vec{A} \cdot d\vec{J} dv$$

Permanent Magnets

Permanent magnets are becoming an even more important element in electric machine systems. Often systems with permanent magnets are approached in a relatively ad-hoc way, made equivalent to a current that produces the same MMF as the magnet itself.

The constitutive relationship for a permanent magnet relates the magnetic flux density $\vec{B}$ to magnetic field $\vec{H}$ and the property of the magnet itself, the magnetization $\vec{M}$.

$$\vec{B} = \mu_0(\vec{H} + \vec{M})$$

Now, the effect of the magnetization is to act as if there were a current (called an amperian current) with density:

$$\vec{J}^* = \nabla \times \vec{M}$$

Note that this amperian current “acts” just like ordinary current in making magnetic flux density. Magnetic co-energy is:

$$W_m' = \int_{\text{vol}} \vec{A} \cdot \nabla \times d\vec{M} dv$$

Next, note the vector identity

$$\nabla \cdot (\vec{C} \times \vec{D}) = \vec{D} \cdot (\nabla \times \vec{C}) - \vec{C} \cdot (\nabla \times \vec{D})$$

So that:

$$W_m' = \int_{\text{vol}} -\nabla \cdot (\vec{A} \times d\vec{M}) dv + \int_{\text{vol}} (\nabla \times \vec{A}) \cdot d\vec{M} dv$$

Then, noting that $\vec{B} = \nabla \times \vec{A}$:

$$W_m' = -\oiint \vec{A} \times d\vec{M} d\vec{s} + \int_{\text{vol}} \vec{B} \cdot d\vec{M} dv$$

The first of these integrals (closed surface) vanishes if it is taken over a surface just outside the magnet, where $\vec{M}$ is zero. Thus the magnetic co-energy in a system with only a permanent magnet source is

$$W_m' = \int_{\text{VOl}} \vec{B} \cdot d\vec{M} dv$$

Adding current carrying coils to such a system is done in the obvious way.

Electric Machine Description:

Actually, this description shows a conventional induction motor. This is a very common type of electric machine and will serve as a reference point. Most other electric machines operate in a fashion which is the same as the induction machine or which differ in ways which are easy to reference to the induction machine.

Consider the simplified machine drawing shown in Figure 3. Most (but not all!) machines we will be studying have essentially this morphology. The rotor of the machine is mounted on a shaft which is supported on some sort of bearing(s). Usually, but not always, the rotor is inside. I have drawn a rotor which is round, but this does not need to be the case. I have also indicated rotor conductors, but sometimes the rotor has permanent magnets either fastened to it or inside, and sometimes (as in Variable Reluctance Machines) it is just an oddly shaped piece of steel. The stator is, in this drawing, on the outside and has windings. With most of the machines we will be dealing with, the stator winding is the armature, or electrical power input element. (In DC and Universal motors this is reversed, with the armature contained on the rotor: we will deal with these later).

In most electrical machines the rotor and the stator are made of highly magnetically permeable materials: steel or magnetic iron. In many common machines such as induction motors the rotor and stator are both made up of thin sheets of silicon steel. Punched into those sheets are slots which contain the rotor and stator conductors.

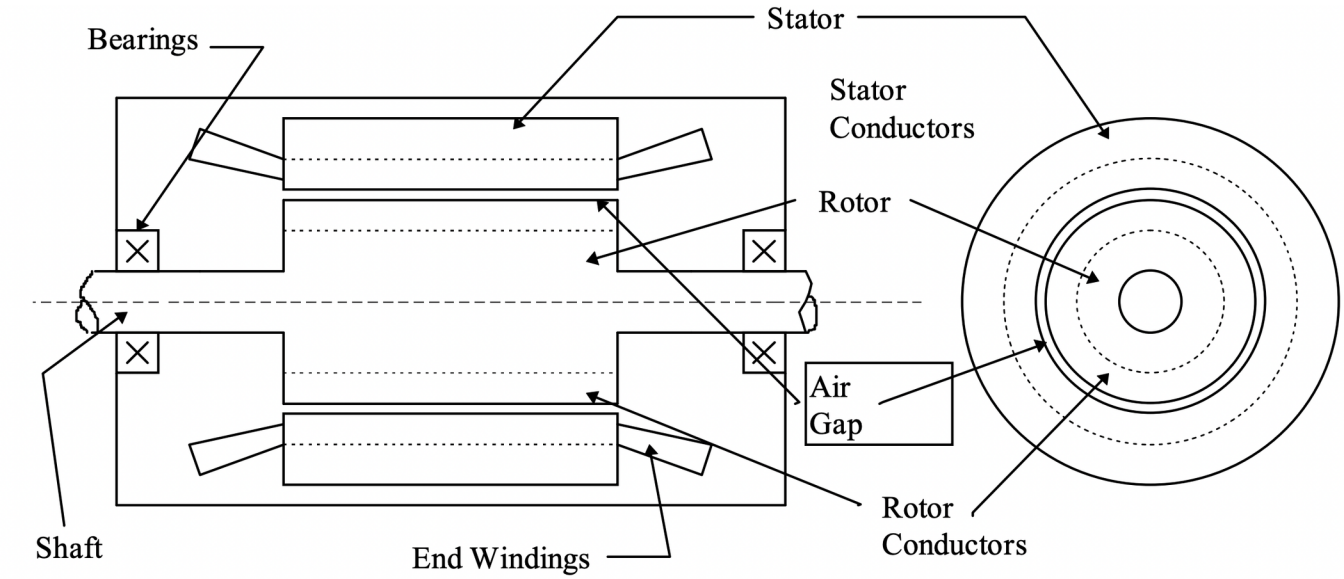

Figure 3: Form of Electric Machine

Figure 4 is a picture of part of an induction machine distorted so that the air-gap is straightened out (as if the machine had infinite radius). This is actually a convenient way of drawing the machine and, we will find, leads to useful methods of analysis.

What is important to note for now is that the machine has an air gap g which is relatively small (that is, the gap dimension is much less than the machine radius r). The machine also has a physical length l. The electric machine works by producing a shear stress in the air-gap (with of course side effects such as production of “back voltage”). It is possible to define the average airgap shear stress, which we will refer to as τ. Total developed torque is force over the surface area times moment (which is rotor radius):

$$T = 2\pi r^2 \ell < \tau >$$

Power transferred by this device is just torque times speed, which is the same as force times surface velocity, since surface velocity is $u = r\Omega$:

$$P_m = \Omega T = 2\pi r \ell < \tau > u$$

If we note that active rotor volume is $\pi r^2 \ell$, the ratio of torque to volume is just:

$$\frac{T}{V_r} = 2 < \tau >$$

Now, determining what can be done in a volume of machine involves two things. First, it is clear that the volume we have calculated here is not the whole machine volume, since it does not include the stator. The actual estimate of total machine volume from the rotor volume is actually quite complex and detailed and we will leave that one for later. Second, we need to estimate the value of the useful average shear stress. Suppose both the radial flux density Br and the stator surface current density Kz are sinusoidal flux waves of the form:

$$B_r = \sqrt{2} B_0 \cos(p\theta - \omega t)$$

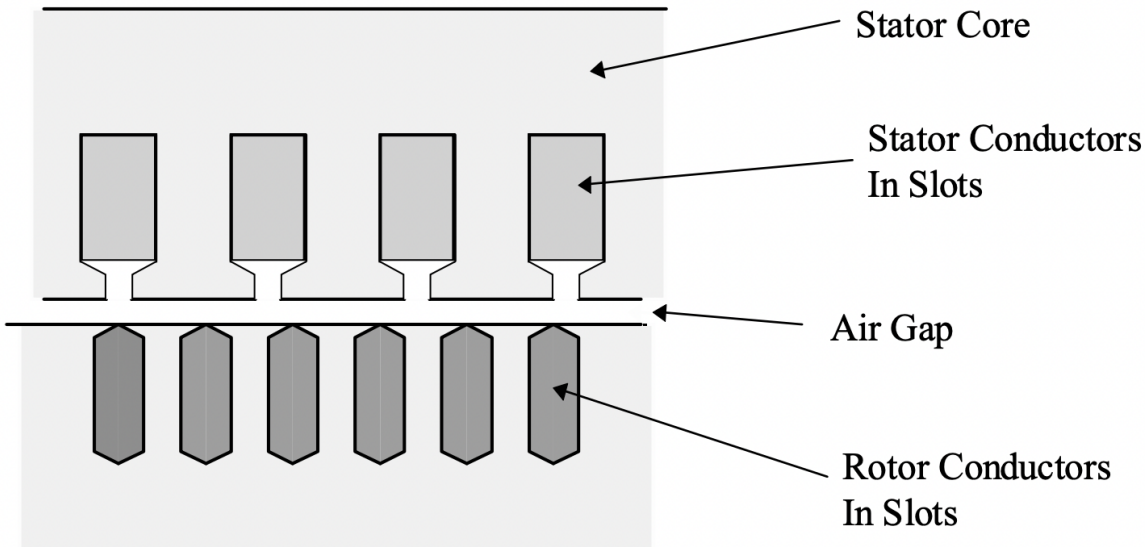

Figure 4: Windings in Slots

$$K_z = \sqrt{2}K_0 \cos(p\theta - \omega t)$$

Note that this assumes these two quantities are exactly in phase, or oriented to ideally produce torque, so we are going to get an "optimistic" bound here. Then the average value of surface traction is:

$$< \tau >= \frac{1}{2\pi} \int_0^{2\pi} B_r K_z d\theta = B_0 K_0$$

This actually makes some sense in view of the empirically derived Lorentz Force Law: Given a (vector) current density and a (vector) flux density. In the absence of magnetic materials (those with permeability different from that of free space), the observed force on a conductor is:

$$\vec{F} = \vec{J} \times \vec{B}$$

Where $\vec{J}$ is the vector describing current density (A/m^2) and $\vec{B}$ is the magnetic flux density (T). This is actually enough to describe the forces we see in many machines, but since electric machines have permeable magnetic material and since magnetic fields produce forces on permeable material even in the absence of macroscopic currents it is necessary to observe how force appears on such material. A suitable empirical expression for force density is:

$$\vec{F} = \vec{J} \times \vec{B} - \frac{1}{2}(\vec{H} \cdot \vec{H})\nabla\mu$$

where $\vec{H}$ is the magnetic field intensity and μ is the permeability.

Now, note that current density is the curl of magnetic field intensity, so that:

$$\begin{aligned} \vec{F} &= (\nabla \times \vec{H}) \times \mu\vec{H} - \frac{1}{2}(\vec{H} \cdot \vec{H})\nabla\mu \\ &= \mu(\nabla \times \vec{H}) \times \vec{H} - \frac{1}{2}(\vec{H} \cdot \vec{H})\nabla\mu \end{aligned}$$

And, since:

$$(\nabla \times \vec{H}) \times \vec{H} = (\vec{H} \cdot \nabla)\vec{H} - \frac{1}{2}\nabla(\vec{H} \cdot \vec{H})$$

force density is:

$$\begin{aligned} \vec{F} &= \mu(\vec{H} \cdot \nabla)\vec{H} - \frac{1}{2}\mu\nabla(\vec{H} \cdot \vec{H}) - \frac{1}{2}(\vec{H} \cdot \vec{H})\nabla\mu \\ &= \mu(\vec{H} \cdot \nabla)\vec{H} - \nabla\left(\frac{1}{2}\mu(\vec{H} \cdot \vec{H})\right) \end{aligned}$$

This expression can be written by components: the component of force in the i'th dimension is:

$$F_i = \mu \sum_k \left(H_k \frac{\partial}{\partial x_k} \right) H_i - \frac{\partial}{\partial x_i} \left(\frac{1}{2} \mu \sum_k H_k^2 \right)$$

Now, see that we can write the divergence of magnetic flux density as:

$$\nabla \cdot \vec{B} = \sum_k \frac{\partial}{\partial x_k} \mu H_k = 0$$

and

$$\mu \sum_k \left(H_k \frac{\partial}{\partial x_k} \right) H_i = \sum_k \frac{\partial}{\partial x_k} \mu H_k H_i - H_i \sum_k \frac{\partial}{\partial x_k} \mu H_k$$

but since the last term in that is zero, we can write force density as:

$$F_k = \frac{\partial}{\partial x_i} \left(\mu H_i H_k - \frac{\mu}{2} \delta_{ik} \sum_n H_n^2 \right)$$

where we have used the Kroneker delta $\delta_{ik} = 1$ if $i = k$, 0 otherwise.

Note that this force density is in the form of the divergence of a tensor:

$$F_k = \frac{\partial}{\partial x_i} T_{ik}$$

or

$$\vec{F} = \nabla \cdot \underline{\underline{T}}$$

In this case, force on some object that can be surrounded by a closed surface can be found by using the divergence theorem:

$$\vec{f} = \int_{\text{vol}} \vec{F} dv = \int_{\text{vol}} \nabla \cdot \underline{\underline{T}} dv = \oiint \underline{\underline{T}} \cdot \vec{n} da$$

or, if we note surface traction to be $\tau_i = \sum_k T_{ik} n_k$, where n is the surface normal vector, then the total force in direction i is just:

$$\vec{f} = \oint_s \tau_i da = \oint \sum_k T_{ik} n_k da$$

The interpretation of all of this is less difficult than the notation suggests. This field description of forces gives us a simple picture of surface traction, the force per unit area on a surface. If we just integrate this traction over the area of some body we get the whole force on the body. Note that this works if we integrate the traction over a surface that is itself in free space but which surrounds the body (because we can impose no force on free space).

Note one more thing about this notation. Sometimes when subscripts are repeated as they are here the summation symbol is omitted. Thus we would write $\tau_i = \sum_k T_{ik} n_k = T_{ik} n_k$.

Now, if we go back to the case of a circular cylinder and are interested in torque, it is pretty clear that we can compute the circumferential force by noting that the normal vector to the cylinder is just the radial unit vector, and then the circumferential traction must simply be:

$$\tau_\theta = \mu_0 H_r H_\theta$$

Simply integrating this over the surface gives azimuthal force, and then multiplying by radius (moment arm) gives torque. The last step is to note that, if the rotor is made of highly permeable material, the azimuthal magnetic field is equal to surface current density.

This page titled 8.1: Energy Conversion Process- is shared under a CC BY-NC-SA 4.0 license and was authored, remixed, and/or curated by James Kirtley (MIT OpenCourseWare) via source content that was edited to the style and standards of the LibreTexts platform.

8.2: Tying the MST and Poynting Approaches Together

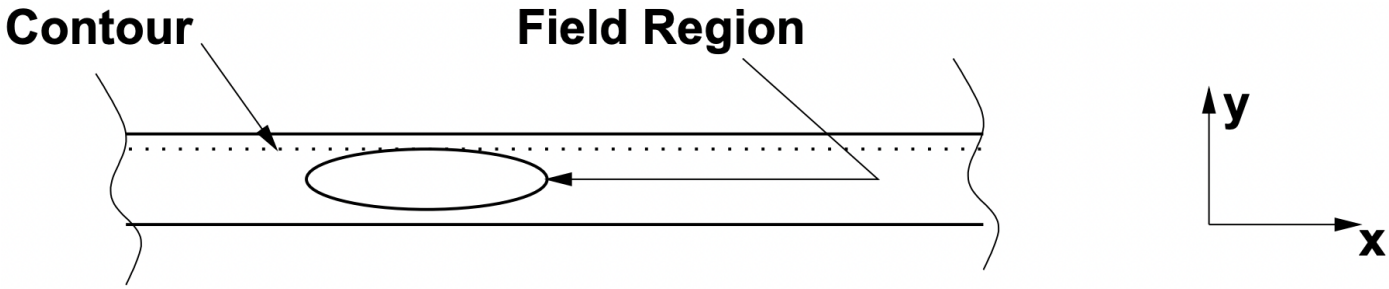

Figure 5: Illustrative Region of Space

Now that the stage is set, consider energy flow and force transfer in a narrow region of space as illustrated by Figure 5. The upper and lower surfaces may support currents. Assume that all of the fields, electric and magnetic, are of the form of a traveling wave in the x- direction: $\mathrm{Re}\left\{e^{j(\omega t-kx)}\right\}$.

If we assume that form for the fields and also assume that there is no variation in the z- direction (equivalently, the problem is infinitely long in the z- direction), there can be no x- directed currents because the divergence of current is zero: $\nabla \cdot \vec{J}=0$. In a magnetostatic system this is true of electric field $\vec{E}$ too. Thus we will assume that current is confined to the z- direction and to the two surfaces illustrated in Figure 5, and thus the only important fields are:

$$\begin{aligned}\vec{E} &= \vec{i}_z \mathrm{Re}\left\{\underline{E}_z e^{j(\omega t-kx)}\right\} \\ \vec{H} &= \vec{i}_x \mathrm{Re}\left\{\underline{H}_x e^{j(\omega t-kx)}\right\} \\ &+ \vec{i}_y \mathrm{Re}\left\{\underline{H}_y e^{j(\omega t-kx)}\right\}\end{aligned}$$

We may use Faraday's Law $\left(\nabla \times \vec{E}=-\frac{\partial \vec{B}}{\partial t}\right)$ to establish the relationship between the electric ∂t and magnetic field: the y-component of Faraday's Law is:

$$jk\underline{E}_z=-j\omega\mu_0\underline{H}_y$$

or

$$\underline{E}_z=-\frac{\omega}{k}\mu_0\underline{H}_y$$

The phase velocity $u_{ph}=\frac{\omega}{k}$ is a most important quantity. Note that, if one of the surfaces is moving (as it would be in, say, an induction machine), the frequency and hence the apparent phase velocity, will be shifted by the motion. We will use this fact shortly.

Energy flow through the surface denoted by the dotted line in Figure 5 is the component of Poynting's Vector in the negative y-direction. The relevant component is:

$$S_y=(\vec{E}\times\vec{H})_y=E_zH_x=-\frac{\omega}{k}\mu_0H_yH_x$$

Note that this expression contains the xy component of the Maxwell Stress Tensor $T_{xy}=\mu_0H_xH_y$ so that power flow downward through the surface is:

$$\mathbf{S}=-S_y=\frac{\omega}{k}\mu_0H_xH_y=u_{ph}T_{xy}$$

The average power flow is the same, in this case, for time and for space, and is:

$$<\mathbf{S}>=\frac{1}{2}\mathrm{Re}\left\{\underline{E}_z\underline{H}_x^*\right\}=u_{ph}\frac{\mu_0}{2}\mathrm{Re}\left\{\underline{H}_y\underline{H}_x^*\right\}$$

We may choose to define a surface impedance:

$$\underline{Z}_s = \frac{\underline{E}_z}{-\underline{H}_x}$$

which becomes:

$$\underline{Z}_s = -\mu_0 u_{ph} \frac{\underline{H}_y}{\underline{H}_x} = -\mu_0 u_{ph} \underline{R}$$

where now we have defined the parameter $\underline{R}$ to be the ratio between y- and x- directed complex field amplitudes. Energy flow through that surface is now:

$$\mathbf{S} = -\frac{1}{s}\mathrm{Re}\left\{\underline{E}_z \underline{H}_x^*\right\} = \frac{1}{2}\mathrm{Re}\left\{\left|\underline{H}_x\right|^2 \underline{Z}_s\right\}$$

This page titled 8.2: Tying the MST and Poynting Approaches Together is shared under a CC BY-NC-SA 4.0 license and was authored, remixed, and/or curated by James Kirtley (MIT OpenCourseWare) via source content that was edited to the style and standards of the LibreTexts platform.

8.3: Simple Description of a Linear Induction Motor

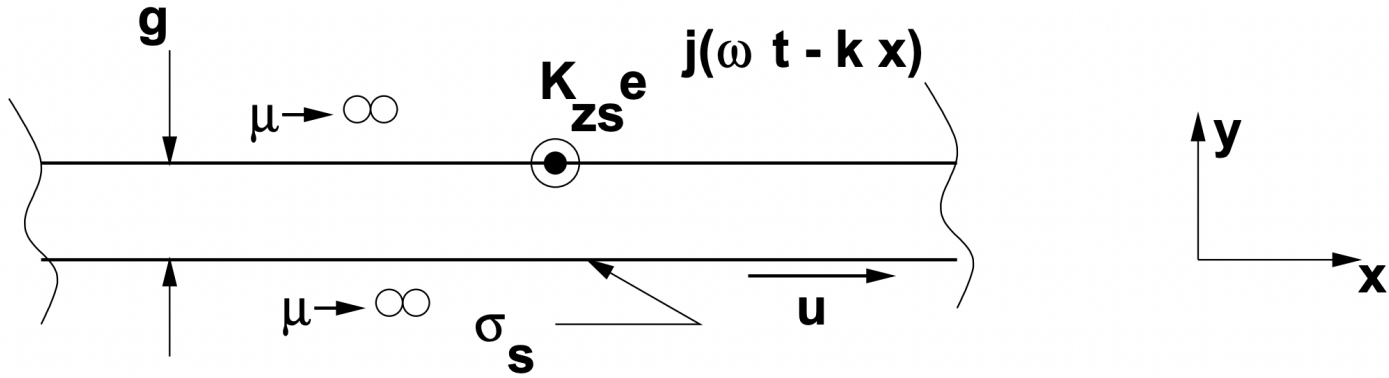

Figure 6: Simple Description of Linear Induction Motor

The stage is now set for an almost trivial description of a linear induction motor. Consider the geometry described in Figure 6. Shown here is only the relative motion gap region. This is bounded by two regions of highly permeable material (e.g. iron), comprising the stator and shuttle. On the surface of the stator (the upper region) is a surface current:

$$\vec{K}_s = \vec{i}_z \operatorname{Re}\left\{\underline{K}_{zs} e^{j(\omega t - kx)}\right\}$$

The shuttle is, in this case, moving in the positive x- direction at some velocity u. It may also be described as an infinitely permeable region with the capability of supporting a surface current with surface conductivity σ_s, so that $K_{zr} = \sigma_s E_z$.

Note that Ampere's Law gives us a boundary condition on magnetic field just below the upper surface of this problem: $H_x = K_{zs}$, so that, if we can establish the ratio between y- and x- directed fields at that location,

\(\ =\frac{\mu_{0}}{2} \operatorname{Re}\left\{\underline{H}_{y} \underline{H}_{x}^{*}\right\}=\frac{\mu_{0}}{2}\left|\underline{K}_{z s}\right|^{2} \operatorname{Re}\{\underline{R}\}\)

Note that the ratio of fields $\underline{H}_y / \underline{H}_x = \underline{R}$ is independent of reference frame (it doesn't matter if we are looking at the fields from the shuttle or the stator), so that the shear stress described by T_{xy} is also frame independent. Now, if the shuttle (lower surface) is moving relative to the upper surface, the velocity of the traveling wave relative to the shuttle is:

$$u_s = u_{ph} - u = s\frac{\omega}{k}$$

where we have now defined the dimensionless slip s to be the ratio between frequency seen by the shuttle to frequency seen by the stator. We may use this to describe energy flow as described by Poynting's Theorem. Energy flow in the stator frame is:

$$\mathbf{S}_{\text{upper}} = u_{ph} T_{xy}$$

In the frame of the shuttle, however, it is

$$\mathbf{S}_{\text{lower}} = u_s T_{xy} = s\mathbf{S}_{\text{upper}}$$

Now, the interpretation of this is that energy flow out of the upper surface $(\mathbf{S}_{\text{upper}})$ consists of energy converted (mechanical power) plus energy dissipated in the shuttle (which is $\mathbf{S}_{\text{lower}}$ here. The difference between these two power flows, calculated using Poynting's Theorem, is power converted from electrical to mechanical form:

$$\mathbf{S}_{\text{converted}} = \mathbf{S}_{\text{upper}}(1 - s)$$

Now, to finish the problem, note that surface current in the shuttle is:

$$\underline{K}_{zr} = \underline{E}_z' \sigma_s = -u_s \mu_0 \sigma_s \underline{H}_y$$

where the electric field $\underline{E'}_z$ is measured in the frame of the shuttle.

We assume here that the magnetic gap g is small enough that we may assume $kg \ll 1$. Ampere's Law, taken around a contour that crosses the air-gap and has a normal in the z- direction, yields:

$$g\frac{\partial H_x}{\partial x} = K_{zs} + K_{zr}$$

In complex amplitudes, this is:

$$-jkg\underline{H}_y = \underline{K}_{zs} + \underline{K}_{zr} = \underline{K}_{zs} - \mu_0 u_s \sigma_s \underline{H}_y$$

or, solving for H_y.

$$\underline{H}_y = \frac{jK_{zs}}{kg}\frac{1}{1+j\mu_0\frac{u_s\sigma_s}{kg}}$$

Average shear stress is

\(\ \left.

This page titled 8.3: Simple Description of a Linear Induction Motor is shared under a CC BY-NC-SA 4.0 license and was authored, remixed, and/or curated by James Kirtley (MIT OpenCourseWare) via source content that was edited to the style and standards of the LibreTexts platform.

8.4: Surface Impedance of Uniform Conductors

The objective of this section is to describe the calculation of the surface impedance presented by a layer of conductive material. Two problems are considered here. The first considers a layer of linear material backed up by an infinitely permeable surface. This is approximately the situation presented by, for example, surface mounted permanent magnets and is probably a decent approximation to the conduction mechanism that would be responsible for loss due to asynchronous harmonics in these machines. It is also appropriate for use in estimating losses in solid rotor induction machines and in the poles of turbogenerators. The second problem, which we do not work here but simply present the previously worked solution, concerns saturating ferromagnetic material.

Linear Case

The situation and coordinate system are shown in Figure 7. The conductive layer is of thicknes T and has conductivity σ and permeability μ_0. To keep the mathematical expressions within bounds, we assume rectilinear geometry. This assumption will present errors which are small to the extent that curvature of the problem is small compared with the wavenumbers encountered. We presume that the situation is excited, as it would be in an electric machine, by a current sheet of the form $K_z = \mathrm{Re}\left\{\underline{K}e^{j(\omega t - kx)}\right\}$.

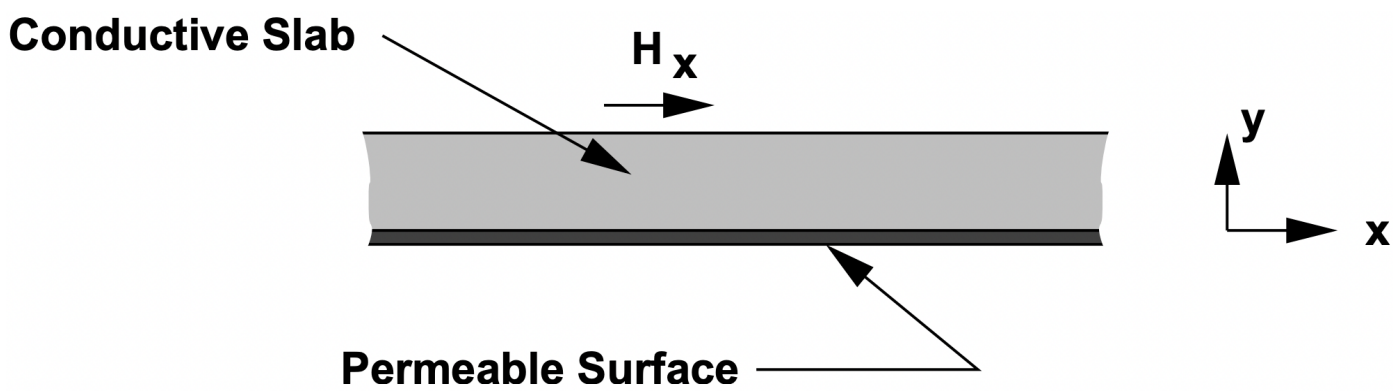

Figure 7: Axial View of Magnetic Field Problem

In the conducting material, we must satisfy the diffusion equation:

$$\nabla^2 \bar{H} = \mu_0 \sigma \frac{\partial \bar{H}}{\partial t}$$

In view of the boundary condition at the back surface of the material, taking that point to be $y = 0$, a general solution for the magnetic field in the material is:

$$H_x = \mathrm{Re}\left\{A \sinh \alpha y e^{j(\omega t - kx)}\right\}$$
$$H_y = \mathrm{Re}\left\{j\frac{k}{\alpha} A \cosh \alpha y e^{j(\omega t - kx)}\right\}$$

where the coefficient α satisfies:

$$\alpha^2 = j\omega\mu_0\sigma + k^2$$

and note that the coefficients above are chosen so that $\bar{H}$ has no divergence.

Note that if k is small (that is, if the wavelength of the excitation is large), this spatial coefficient α becomes

$$\alpha = \frac{1+j}{\delta}$$

where the skin depth is:

$$\delta = \sqrt{\frac{2}{\omega\mu_0\sigma}}$$

To obtain surface impedance, we use Faraday's law:

$$\nabla \times \bar{E} = -\frac{\partial \bar{B}}{\partial t}$$

which gives:

$$\underline{E}_z = -\mu_0 \frac{\omega}{k} \underline{H}_y$$

Now: the "surface current" is just

$$\underline{K}_s = -\underline{H}_x$$

so that the equivalent surface impedance is:

$$\underline{Z} = \frac{\underline{E}_z}{-\underline{H}_x} = j\mu_0 \frac{\omega}{\alpha} \coth \alpha T$$

A pair of limits are interesting here. Assuming that the wavelength is long so that k is negligible, then if αT is small (i.e. thin material),

$$\underline{Z} \to j\mu_0 \frac{\omega}{\alpha^2 T} = \frac{1}{\sigma T}$$

On the other hand as $\alpha T \to \infty$,

$$\underline{Z} \to \frac{1+j}{\sigma\delta}$$

Next it is necessary to transfer this surface impedance across the air-gap of a machine. So, with reference to Figure 8, assume a new coordinate system in which the surface of impedance $\underline{Z}_s$ is located at $y = 0$, and we wish to determine the impedance $\underline{Z} = -\underline{E}_z / \underline{H}_x$ at $y = g$.

In the gap there is no current, so magnetic field can be expressed as the gradient of a scalar potential which obeys Laplace's equation:

$$\bar{H} = -\nabla\psi$$

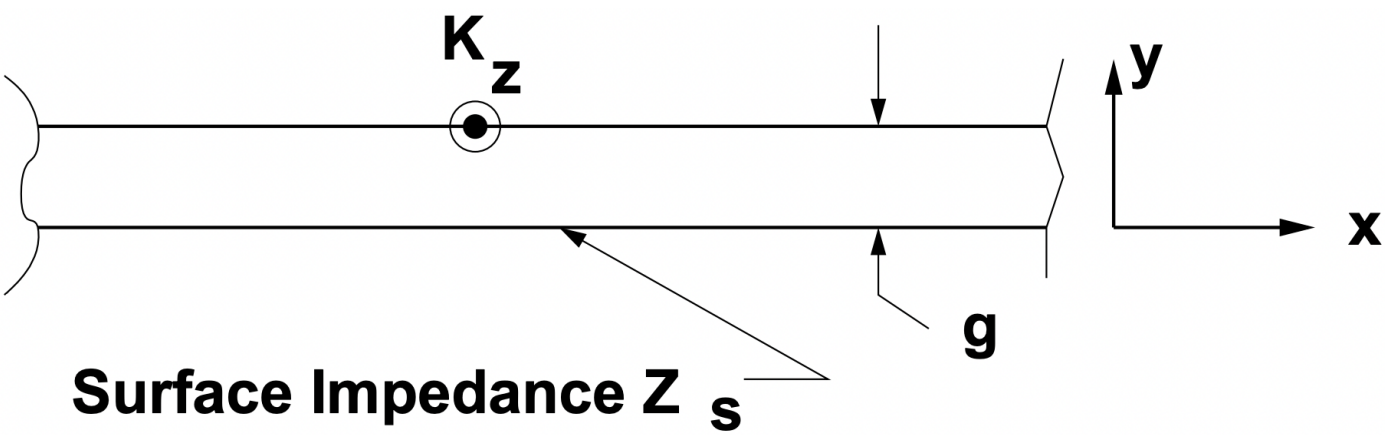

Figure 8: Impedance across the air-gap

and

$$\nabla^2\psi = 0$$

Ignoring a common factor of $e^{j(\omega t - kx)}$, we can express $\bar{H}$ in the gap as:

$$\underline{H}_x = jk\left(\underline{\psi}_+ e^{ky} + \underline{\psi}_- e^{-ky}\right)$$
$$\underline{H}_y = -k\left(\underline{\psi}_+ e^{ky} - \underline{\psi}_- e^{-ky}\right)$$

At the surface of the rotor,

$$\underline{E}_z = -\underline{H}_x \underline{Z}_s$$

or

$$-\omega\mu_0\left(\underline{\psi}_+ - \underline{\psi}_-\right) = jk\underline{Z}_s\left(\underline{\psi}_+ + \underline{\psi}_-\right)$$

and then, at the surface of the stator,

$$\underline{Z} = -\frac{\underline{E}_z}{\underline{H}_x} = j\mu_0\frac{\omega}{k}\frac{\underline{\psi}_+ e^{kg} - \underline{\psi}_- e^{-kg}}{\underline{\psi}_+ e^{kg} + \underline{\psi}_- e^{-kg}}$$

A bit of manipulation is required to obtain:

$$\underline{Z} = j\mu_0\frac{\omega}{k}\left\{\frac{e^{kg}(\omega\mu_0 - jk\underline{Z}_s) - e^{-kg}(\omega\mu_0 + jk\underline{Z}_s)}{e^{kg}(\omega\mu_0 - jk\underline{Z}_s) + e^{-kg}(\omega\mu_0 + jk\underline{Z}_s)}\right\}$$

It is useful to note that, in the limit of $\underline{Z}_s \to \infty$, this expression approaches the gap impedance

$$\underline{Z}_g = j\frac{\omega\mu_0}{k^2 g}$$

and, if the gap is small enough that $kg \to 0$,

$$\underline{Z} \to \underline{Z}_g \| \underline{Z}_s$$

This page titled 8.4: Surface Impedance of Uniform Conductors is shared under a CC BY-NC-SA 4.0 license and was authored, remixed, and/or curated by James Kirtley (MIT OpenCourseWare) via source content that was edited to the style and standards of the LibreTexts platform.

8.5: Iron

Electric machines employ ferromagnetic materials to carry magnetic flux from and to appropriate places within the machine. Such materials have properties which are interesting, useful and problematical, and the designers of electric machines must deal with this stuff. The purpose of this note is to introduce the most salient properties of the kinds of magnetic materials used in electric machines.

We will be concerned here with materials which exhibit magnetization: flux density is something other than $\vec{B} = \mu_0 \vec{H}$. Generally, we will speak of hard and soft magnetic materials. Hard materials are those in which the magnetization tends to be permanent, while soft materials are used in magnetic circuits of electric machines and transformers. Since they are related we will find ourselves talking about them either at the same time or in close proximity, even though their uses are widely disparite.

Magnetization:

It is possible to relate, in all materials, magnetic flux density to magnetic field intensity with a consitutive relationship of the form:

$$\vec{B} = \mu_0(\vec{H} + \vec{M})$$

where magnetic field intensity H and magnetization M are the two important properties. Now, in linear magnetic material magnetization is a simple linear function of magnetic field:

$$\vec{M} = \chi_m \vec{H}$$

so that the flux density is also a linear function:

$$\vec{B} = \mu_0 \left(1 + \chi_m\right) \vec{H}$$

Note that in the most general case the magnetic susceptibility cm might be a tensor, leading to flux density being non-colinear with magnetic field intensity. But such a relationship would still be linear. Generally this sort of complexity does not have a major effect on electric machines.

Saturation and Hysteresis

In useful magnetic materials this nice relationship is not correct and we need to take a more general view. We will not deal with the microscopic picture here, except to note that the magnetization is due to the alignment of groups of magnetic dipoles, the groups often called domaines. There are only so many magnetic dipoles available in any given material, so that once the flux density is high enough the material is said to saturate, and the relationship between magnetic flux density and magnetic field intensity is nonlinear.

Shown in Figure 9, for example, is a “saturation curve” for a magnetic sheet steel that is sometimes used in electric machinery. Note the magnetic field intensity is on a logarithmic scale. If this were plotted on linear coordinates the saturation would appear to be quite abrupt.

At this point it is appropriate to note that the units used in magnetic field analysis are not always the same nor even consistent. In almost all systems the unit of flux is the weber (W), which

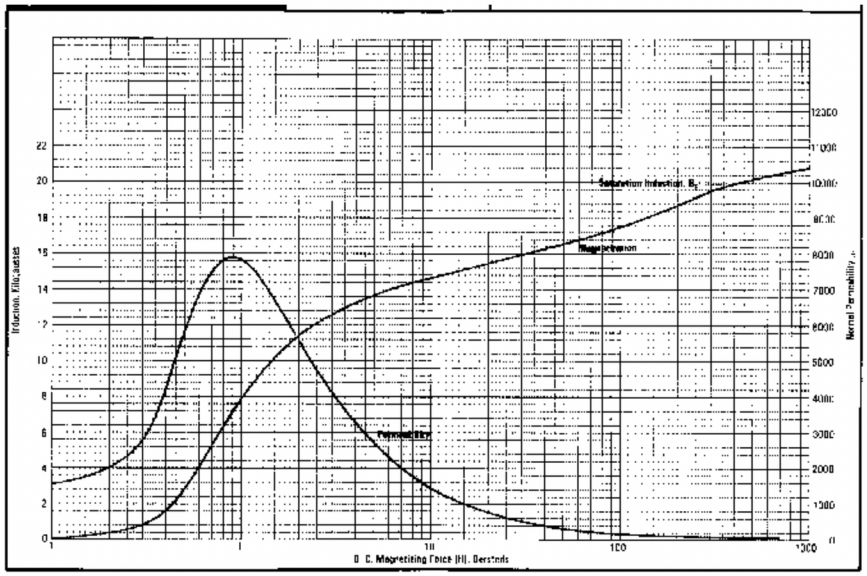

Courtesy of United States Steel Corporation. (U.S. Steel). U.S. Steel accepts no liability for reliance on any information contained in the graphs shown above.

is the same as a volt-second. In SI the unit of flux density is the tesla (T), but many people refer to the gauss (G), which has its origin in CGS. 10,000 G = 1 T. Now it gets worse, because there is an English system measure of flux density generally called kilo-lines per square inch. This is because in the English system the unit of flux is the line. 10^8 lines is equal to a weber. Thus a Tesla is 64.5 kilolines per square inch.

The SI and CGS units of flux density are easy to reconcile, but the units of magnetic field are a bit harder. In SI we generally measure H in amperes/meter (or ampere-turns per meter). Often, however, you will see magnetic field represented as Oersteds (Oe). One Oe is the same as the magnetic field required to produce one gauss in free space. So 79.577 A/m is one Oe.

In most useful magnetic materials the magnetic domaines tend to be somewhat “sticky”, and a more-than-incremental magnetic field is required to get them to move. This leads to the property called “hysteresis”, both useful and problematical in many magnetic systems.

Hysteresis loops take many forms; a generalized picture of one is shown in Figure 10. Salient features of the hysteresis curve are the remanent magnetization B_r and the coercive field H_c. Note that the actual loop that will be traced out is a function of field amplitude and history. Thus there are many other “minor loops” that might be traced out by the B-H characteristic of a piece of material, depending on just what the fields and fluxes have done and are doing.

Now, hysteresis is important for two reasons. First, it represents the mechanism for “trapping” magnetic flux in a piece of material to form a permanent magnet. We will have more to say about that anon. Second, hysteresis is a loss mechanism. To show this, consider some arbitrary chunk of

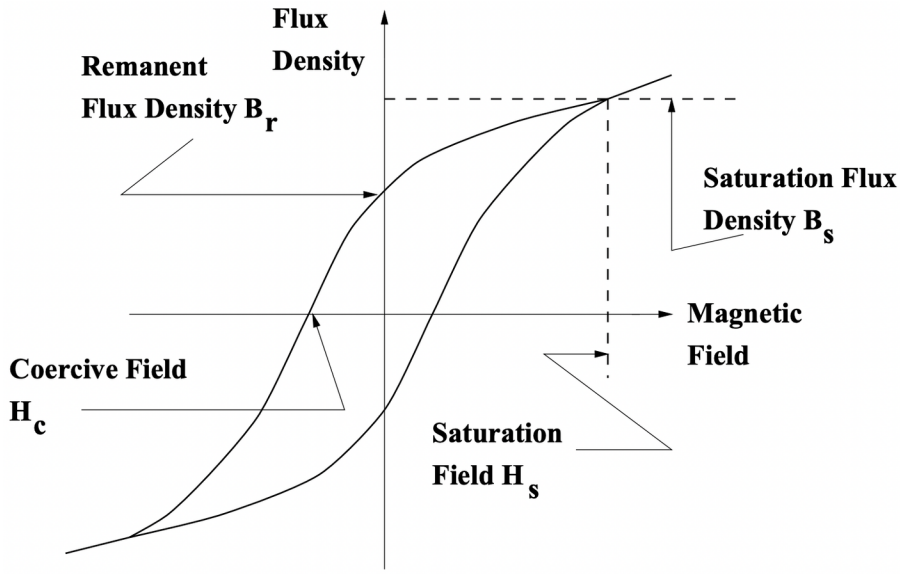

Figure 10: Hysteresis Curve Nomenclature

material for which we can characterize an MMF and a flux:

$$F = NI = \int \vec{H} \cdot de\vec{l}l$$
$$\Phi = \int \frac{V}{N} dt = \iint_{\text{Area}} \vec{B} \cdot d\vec{A}$$

Energy input to the chunk of material over some period of time is

$$w = \int VIdt = \int Fd\Phi = \int_t \int \vec{H} \cdot d\vec{\ell} \iint d\vec{B} \cdot d\vec{A} dt$$

Now, imagine carrying out the second (double) integral over a continuous set of surfaces which are perpendicular to the magnetic field H. (This IS possible!). The energy becomes:

$$w = \int_t \iiint \vec{H} \cdot d\vec{B} \text{dvol} dt$$

and, done over a complete cycle of some input waveform, that is:

$$w = \iiint_{\text{vol}} W_m \text{dvol}$$
$$W_m = \oint_t \vec{H} \cdot d\vec{B}$$

That last expression simply expresses the area of the hysteresis loop for the particular cycle.

Generally, for most electric machine applications we will use magnetic material characterized as “soft”, having as narrow a hysteresis loop (and therefore as low a hysteretic loss) as possible. At the other end of the spectrum are “hard” magnetic materials which are used to make permanent magnets. The terminology comes from steel, in which soft, annealed steel material tends to have narrow loops and hardened steel tends to have wider loops. However permanent magnet technology has advanced to the point where the coercive forces possible in even cheap ceramic magnets far exceed those of the hardest steels.

Conduction, Eddy Currents and Laminations:

Steel, being a metal, is an electrical conductor. Thus when time varying magnetic fields pass through it they cause eddy currents to flow, and of course those produce dissipation. In fact, for almost all applications involving “soft” iron, eddy currents are the dominant source of loss. To reduce the eddy current loss, magnetic circuits of transformers and electric machines are almost invariably laminated, or made up of relatively thin sheets of steel. To further reduce losses the steel is alloyed with elements (often silicon) which poison the electrical conductivity.

There are several approaches to estimating the loss due to eddy currents in steel sheets and in the surface of solid iron, and it is worthwhile to look at a few of them. It should be noted that this is a “hard” problem, since the behavior of the material itself is difficult to characterize.

Complete Penetration Case

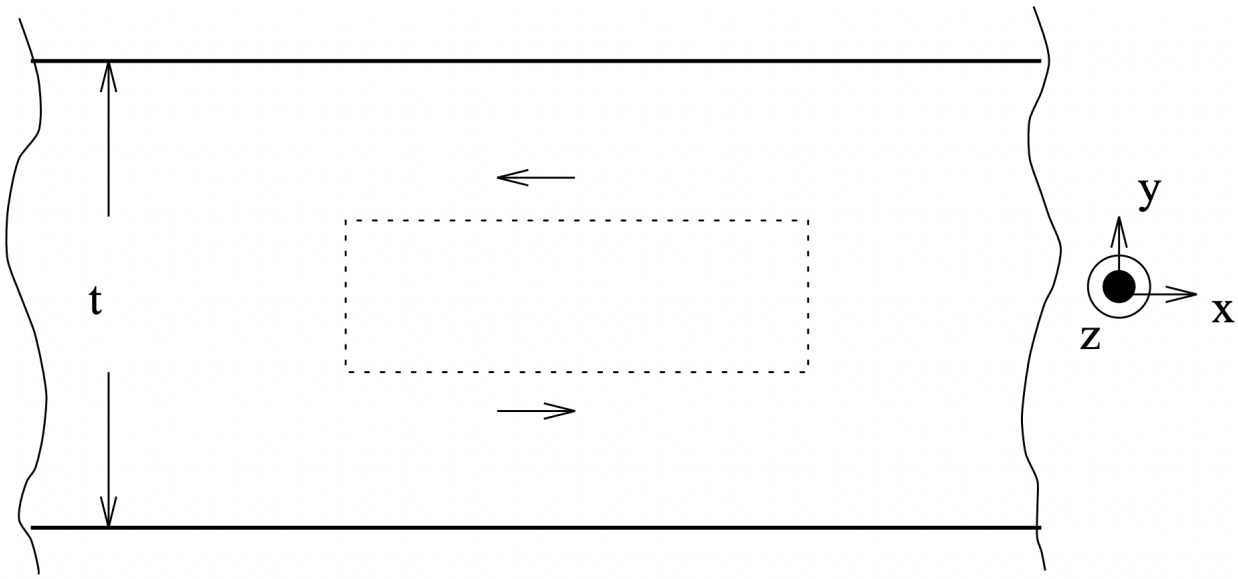

Figure 11: Lamination Section for Loss Calculation

Consider the problem of a stack of laminations. In particular, consider one sheet in the stack represented in Figure 11. It has thickness t and conductivity σ. Assume that the “skin depth” is much greater than the sheet thickness so that magnetic field penetrates the sheet completely. Further, assume that the applied magnetic flux density is parallel to the surface of the sheets:

$$\vec{B} = \vec{i}_z \operatorname{Re}\left\{\sqrt{2} B_0 e^{j\omega t}\right\}$$

Now we can use Faraday’s law to determine the electric field and therefore current density in the sheet. If the problem is uniform in the x- and z- directions,

$$\frac{\partial E_x}{\partial y} = -j\omega_0 B_0$$

Note also that, unless there is some net transport current in the x- direction, E must be antisymmetric about the center of the sheet. Thus if we take the origin of y to be in the center, electric field and current are:

$$\begin{aligned} E_x &= -j\omega B_0 y \\ \underline{J}_x &= -j\omega B_0 \sigma y \end{aligned}$$

Local power dissipated is

$$P(y) = \omega^2 B_0^2 \sigma y^2 = \frac{|J|^2}{\sigma}$$

To find average power dissipated we integrate over the thickness of the lamination:

\(\

=\frac{2}{t} \int_{0}^{\frac{t}{2}} P(y) d y=\frac{2}{t} \omega^{2} B_{0}^{2} \sigma \int_{0}^{\frac{t}{2}} y^{2} d y=\frac{1}{12} \omega^{2} B_{0}^{2} t^{2} \sigma\)

Pay attention to the orders of the various terms here: power is proportional to the square of flux density and to the square of frequency. It is also proportional to the square of the lamination thickness (this is average volume power dissipation).

As an aside, consider a simple magnetic circuit made of this material, with some length ℓ and area A, so that volume of material

is ℓA. Flux lined by a coil of N turns would be:

$$\Lambda = N\Phi = NAB_0$$

and voltage is of course just $V = jwL$. Total power dissipated in this core would be:

$$P_c = A\ell\frac{1}{12}\omega^2 B_0^2 t^2 \sigma = \frac{V^2}{R_c}$$

where the equivalent core resistance is now

$$R_c = \frac{A}{\ell}\frac{12N^2}{\sigma t^2}$$

Eddy Currents in Saturating Iron

The same geometry holds for this pattern, although we consider only the one-dimensional problem $(k \to 0)$. The problem was worked by McLean and his graduate student Agarwal Equation ??? Equation ???. They assumed that the magnetic field at the surface of the flat slab of material was sinusoidal in time and of high enough amplitude to saturate the material. This is true if the material has high permeability and the magnetic field is strong. What happens is that the impressed magnetic field saturates a region of material near the surface, leading to a magnetic flux density parallel to the surface. The depth of the region affected changes with time, and there is a separating surface (in the flat problem this is a plane) that moves away from the top surface in response to the change in the magnetic field. An electric field is developed to move the surface, and that magnetic field drives eddy currents in the material.

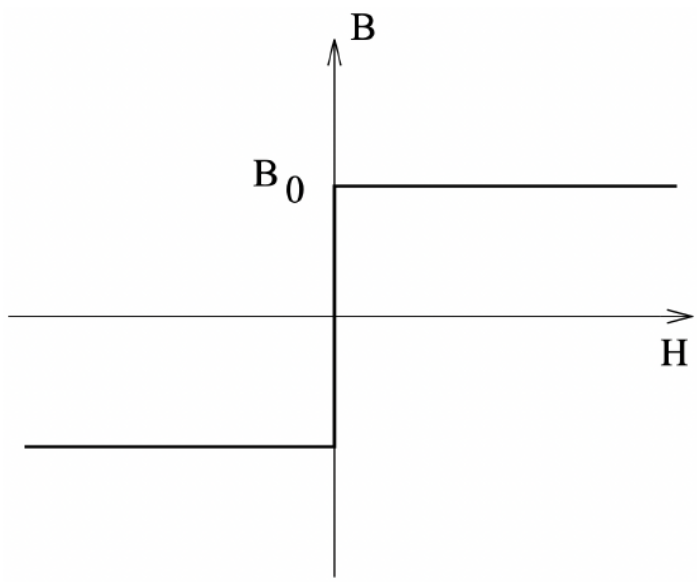

Figure 12: Idealized Saturating Characteristic

Assume that the material has a perfectly rectangular magnetization curve as shown in Figure 12, so that flux density in the x-direction is:

$$B_x = B_0 \operatorname{sign}(H_x)$$

The flux per unit width (in the z- direction) is:

$$\Phi = \int_0^{-\infty} B_x dy$$

and Faraday's law becomes:

$$E_z = \frac{\partial \Phi}{\partial t}$$

while Ampere's law in conjunction with Ohm's law is:

$$\frac{\partial H_x}{\partial y} = \sigma E_z$$

Now, McLean suggested a solution to this set in which there is a “separating surface” at depth ζ below the surface, as shown in Figure 13 . At any given time:

$$H_x = H_s(t)\left(1 + \frac{y}{\zeta}\right)$$
$$J_z = \sigma E_z = \frac{H_s}{\zeta}$$

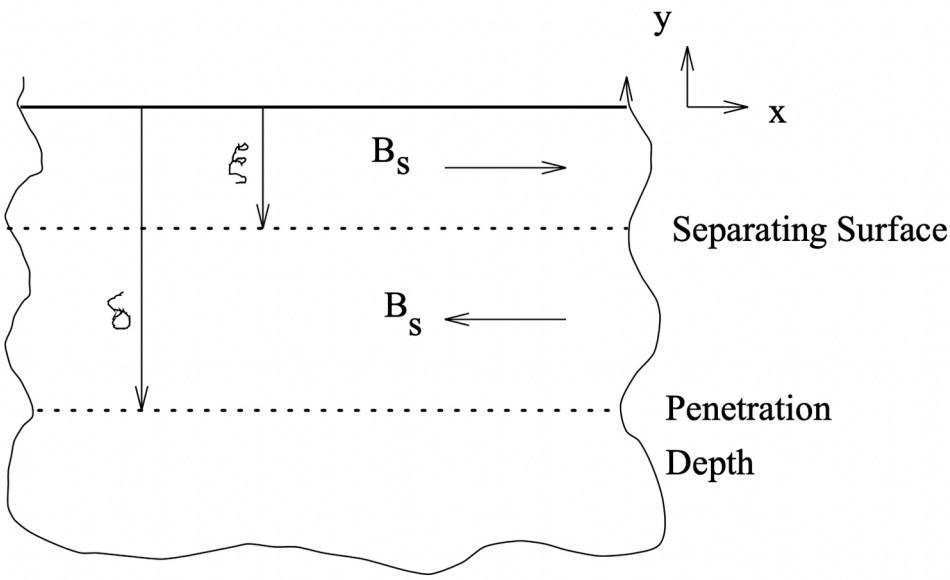

Figure 13: Separating Surface and Penetration Depth

That is, in the region between the separating surface and the top of the material, electric field E_z is uniform and magnetic field H_x is a linear function of depth, falling from its impressed value at the surface to zero at the separating surface. Now: electric field is produced by the rate of change of flux which is:

$$E_z = \frac{\partial \Phi}{\partial t} = 2B_x \frac{\partial \zeta}{\partial t}$$

Eliminating E, we have:

$$2\zeta \frac{\partial \zeta}{\partial t} = \frac{H_s}{\sigma B_x}$$

and then, if the impressed magnetic field is sinusoidal, this becomes:

$$\frac{d\zeta^2}{dt} = \frac{H_0}{\sigma B_0} |\sin \omega t|$$

This is easy to solve, assuming that $\zeta = 0$ at $t = 0$,

$$\zeta = \sqrt{\frac{2H_0}{\omega \sigma B_0}} \sin \frac{\omega t}{2}$$

Now: the surface always moves in the downward direction (as we have drawn it), so at each half cycle a new surface is created: the old one just stops moving at a maximum position, or penetration depth:

$$\delta = \sqrt{\frac{2H_0}{\omega \sigma B_0}}$$

This penetration depth is analogous to the “skin depth” of the linear theory. However, it is an absolute penetration depth.

The resulting electric field is:

$$E_z = \frac{2H_0}{\sigma \delta} \cos \frac{\omega t}{2} \qquad 0 < \omega t < \pi$$

This may be Fourier analyzed: noting that if the impressed magnetic field is sinusoidal, only the time fundamental component of electric field is important, leading to:

$$E_z = \frac{8}{3\pi}\frac{H_0}{\sigma\delta}(\cos\omega t + 2\sin\omega t + ...)$$

Complex surface impedance is the ratio between the complex amplitude of electric and magnetic field, which becomes:

$$\underline{Z}_s = \frac{\underline{E}_z}{\underline{H}_x} = \frac{8}{3\pi}\frac{1}{\sigma\delta}(2+j)$$

Thus, in practical applications, we can handle this surface much as we handle linear conductive surfaces, by establishing a skin depth and assuming that current flows within that skin depth of the surface. The resistance is modified by the factor of $\frac{16}{3\pi}$ and the “power factor” of this surface is about 89 % (as opposed to a linear surface where the “power factor” is about 71 %.

Agarwal suggests using a value for B_0 of about 75 % of the saturation flux density of the steel.

This page titled 8.5: Iron is shared under a CC BY-NC-SA 4.0 license and was authored, remixed, and/or curated by James Kirtley (MIT OpenCourseWare) via source content that was edited to the style and standards of the LibreTexts platform.

8.6: Semi-Empirical Method of Handling Iron Loss

Neither of the models described so far are fully satisfactory in describing the behavior of laminated iron, because losses are a combination of eddy current and hysteresis losses. The rather simple model employed for eddy currents is precise because of its assumption of abrupt saturation. The hysteresis model, while precise, would require an empirical determination of the size of the hysteresis loops anyway. So we must often resort to empirical loss data. Manufacturers of lamination steel sheets will publish data, usually in the form of curves, for many of their products. Here are a few ways of looking at the data.

A low frequency flux density vs. magnetic field ("saturation") curve was shown in Figure 9. Included with that was a measure of the incremental permeability

$$\mu' = \frac{dB}{dH}$$

In some machine applications either the "total" inductance (ratio of flux to MMF) or "incremental" inductance (slope of the flux to MMF curve) is required. In the limit of low frequency these numbers may be useful.

For designing electric machines, however, a second way of looking at steel may be more useful. This is to measure the real and reactive power as a function of magnetic flux density and (sometimes) frequency. In principal, this data is immediately useful. In any well-designed electric machine the flux density in the core is distributed fairly uniformly and is not strongly affected by eddy currents, etc. in the core. Under such circumstances one can determine the flux density in each part of the core. With that information one can go to the published empirical data for real and reactive power and determine core loss and reactive power requirements.

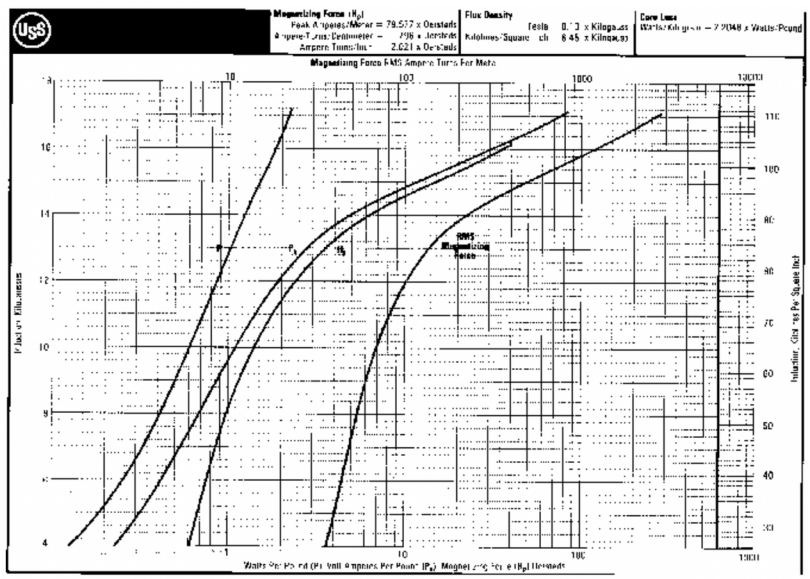

Courtesy of United States Steel Corporation. (U.S. Steel). U.S. Steel accepts no liability for reliance on any information contained in the graphs shown above.

Figure 14 shows core loss and "apparent" power per unit mass as a function of (RMS) induction for 29 gage, fully processed M-19 steel. The two left-hand curves are the ones we will find most useful. " P" denotes real power while " P_a" denotes "apparent power". The use of this data is quite straightforward. If the flux density in a machine is estimated for each part of the machine and the mass of steel calculated, then with the help of this chart a total core loss and apparent power can

Table 1: Exponential Fit Parameters for Two Steel Sheets

29 Ga, Fully Processed

		M-19	M-36

Base Flux Density	B_0	1 T	1 T
Base Frequency	f_0	60 Hz	60 Hz
Base Power (w/lb)	P_0	0.59	0.67
Flux Exponent	ϵ_B	1.88	1.86
Frequency Exponent	ϵ_F	1.53	1.48
Base Apparent Power 1	VA_0	1.08	1.33
Base Apparent Power 2	VA_1	.0144	.0119
Flux Exponent	ϵ_0	1.70	2.01
Flux Exponent	ϵ_1	16.1	17.2

be estimated. Then the effect of the core may be approximated with a pair of elements in parallel with the terminals, with:

$$R_c = \frac{q|V|^2}{P}$$
$$X_c = \frac{q|V|^2}{Q}$$
$$Q = \sqrt{P_a^2 - P^2}$$

Where q is the number of machine phases and V is phase voltage. Note that this picture is, strictly speaking, only valid for the voltage and frequency for which the flux density was calculated. But it will be approximately true for small excursions in either voltage or frequency and therefore useful for estimating voltage drop due to exciting current and such matters. In design program applications these parameters can be re-calculated repeatedly if necessary.

“Looking up” this data is a it awkward for design studies, so it is often convenient to do a “curve fit” to the published data. There are a large number of possible ways of doing this. One method that has bee found to work reasonably well for silicon iron is an “exponential fit”:

$$P \approx P_0 \left(\frac{B}{B_0}\right)^{\epsilon_B} \left(\frac{f}{f_0}\right)^{\epsilon_F}$$

This fit is appropriate if the data appears on a log-log plot to lie in approximately straight lines. Figure 15 shows such a fit for the same steel sheet as the other figures.

For “apparent power” the same sort of method can be used. It appears, however, that the simple exponential fit which works well for real power is inadequate, at least if relatively high inductions are to be used. This is because, as the steel saturates, the reactive component of exciting current rises rapidly. I have had some success with a “double exponential” fit:

$$VA \approx VA_0 \left(\frac{B}{B_0}\right)^{\epsilon_0} + VA_1 \left(\frac{B}{B_0}\right)^{\epsilon_1}$$

To first order the reactive component of exciting current will be linear in frequency.

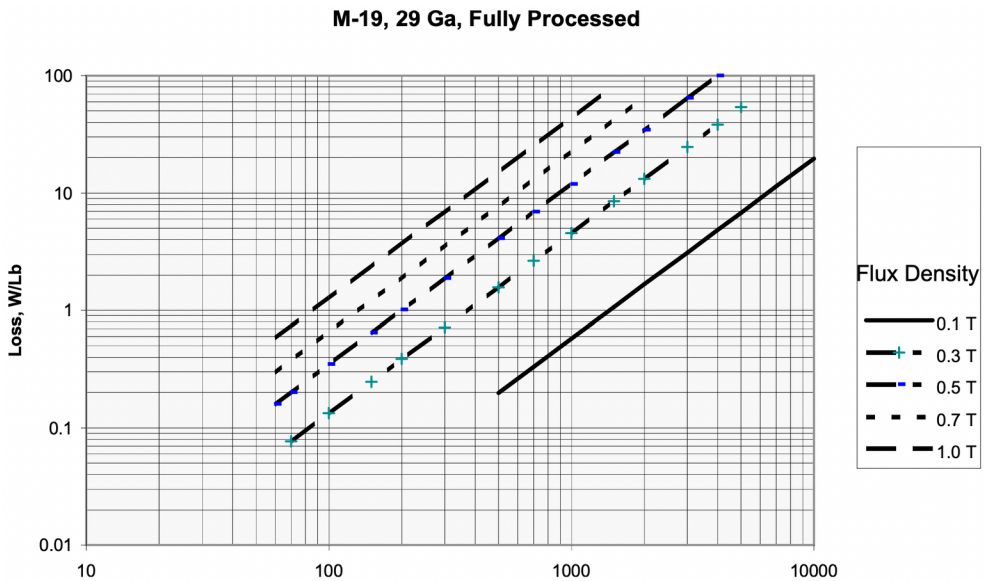

Figure 15: Steel Sheet Core Loss Fit vs. Flux Density and Frequency

In the disk that is to be distributed with these notes there are a number of data files representing properties of different types of nonoriented sheet steel. The format of each of the files is the same: two columns of numbers, the first is flux density in Tesla, RMS, 60 Hz. The second column is watts per pound or vo). Proc is “f” for fully processed and “s” for semiprocessed. Data is “p” for power, “pa” for apparent power. Gage is 29 (.014” thick), 26 (.0185” thick) or 24 (.025” thick). Example: m19fp29.prn designates loss in M-19 material, fully processed, 29 gage.

Also on the disk are three curve fitting routines that appear to work with this data. (Not all of the routines work with all of the data!). They are:

1. `efit .`

   `fit what (name.prn) ==>`

   Enter the file name for the material designator without the `.prn` extension. The program will think about the problem for a few seconds and put up a plot of its fit with points noting the actual data. Enter a and a summary of the fit turns up, including the fit parameters and an error indication. These programs use MATLAB’s fmins routine to minimize a mean-squared error as calculated by the auxiliary function `fiterr.m`.

2. `e2fit.m` implements the double exponential fit of apparent power against flux density. Use is just like efit. It uses the auxiliary function `fit2err.m`.
3. `pfit.m` uses the MATLAB function polyfit to fit a polynomial (in B) to the data.

Most of the machine design scripts enclosed with the material for this special summer subject employ the exponential fits for core iron developed here.

References

Equation ??? W. MacLean, “Theory of Strong Electromagnetic Waves in Massive Iron”, Journal of Applied Physics, V.25, No 10, October, 1954

Equation ??? P.D. Agarwal, “Eddy-Current Losses in Solid and Laminated Iron”, Trans. AIEE, V. 78, pp 169-171, 1959

Non-Oriented Silicon Steels

AK Steel
Di-Max M-19
Fully Processed
.014 inch
(.36 mm, 29 gauge)

Summary Graphs

Magnetization Curves
Magnetization Data
Core Loss Curves
Core Loss Data
Exciting Power Data
Spreadsheet
Other Thicknesses
.0185 inch
.025 inch
AK Steel Product Info

AK Steel Non-Oriented Silicon Steel Menu
Non-Oriented Silicon Steels Menu
Lamination Steels Main Menu

EMERF
L·S·T·E

Summary Graphs

Magnetization – *B* vs. *H*

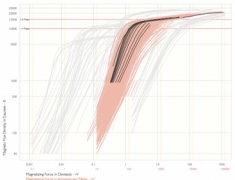

Magnetization curves for this material, DC through 2000 hertz
All non-oriented silicon steels
All other materials

Total Core Loss – P_c vs. *B*

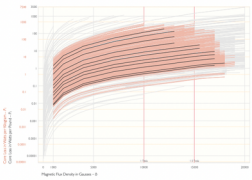

Total core loss curves for this material, 50 through 2000 hertz
All non-oriented silicon steels
All other materials

Summary magnetization and total core loss curves for as-sheared .014 inch (.36 mm, 29 gauge) Di-Max M-19 fully processed cold-rolled non-oriented silicon steel showing their relation to these properties for other materials found in *Lamination Steels Third Edition*. See the following pages for detailed graphs and data values.

Producer: AK Steel, Middletown, Ohio, USA, www.aksteel.com.

Primary standard: ASTM A677 36F155.

Information on this page is not guaranteed or endorsed by The Electric Motor Education and Research Foundation. Confirm material properties with material producer prior to use. © 2007 The Electric Motor Education and Research Foundation. MIT OCW excerpts prepared October 2008.

EMERF Electric Motor Education & Research Foundation

This and the following five pages are excerpted from the Laminations Steels Third Edition CD-ROM published by the Electric Motor Education and Research Foundation and are intended for use in the Massachusetts Institute of Technology OpenCourseWare program. Unauthorized duplication and distribution of this document in violation of the OpenCourseWare license is prohibited. Incorporation of this information in other publications or software, in whole or in part, in violation of the OpenCourseWare license or without specific authorization from Electric Motor Education and Research Foundation, is prohibited.

Courtesy of the Electric Motor Education and Research Foundation. Used with permission.

Please use the following citation when referring to these pages:
Sprague, Steve, editor. 2007. Lamination Steels Third Edition, A Compendium of Lamination Steel Alloys Commonly Used in Electric Motors. South Dartmouth, Massachusetts: The Electric Motor Education and Research Foundation. CD-ROM. Non-Oriented Silicon Steels: AK Steel Di-Max M-19, Fully Processed, .014 inch (.36 mm, 29 gauge), MIT OCW Excerpts.

Lamination Steels Third Edition is © 2007 by the Electric Motor Education and Research Foundation; ISBN 0971439125. Information about the complete CD-ROM can obtained from:
The Electric Motor Education and Research Foundation, Post Office Box P1182, South Dartmouth, Massachusetts 02748 USA
tel: 508.979.5935 fax: 508.979.5845 email: info@emma.org www.emma.org

LAMINATION STEELS THIRD EDITION
Excerpts specially prepared for the Massachusetts Institute of Technology
by the Electric Motor Education and Research Foundation

Non-Oriented Silicon Steels

AK Steel
Di-Max M-19
Fully Processed
.014 inch
(.36 mm, 29 gauge)

Magnetization Curves

Summary Graphs
Magnetization Data
Core Loss Curves
Core Loss Data
Exciting Power Data
Spreadsheet
Other Thicknesses
.0185 inch
.025 inch
AK Steel Product Info

AK Steel Non-Oriented Silicon Steel Menu
Non-Oriented Silicon Steels Menu
Lamination Steels Main Menu

EMERF
L·S·T·E

Magnetization – *B* vs. *H* – by Frequency

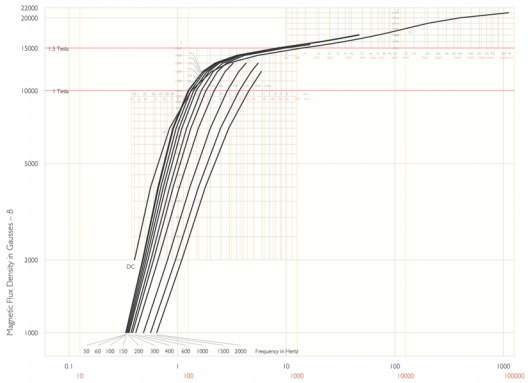

Typical DC and derived AC magnetizing force of as-sheared .014 inch (.36 mm, 29 gauge) Di-Max M-19 fully processed cold-rolled non-oriented silicon steel. See magnetization data page for data values. DC curve developed from published and AC curves from previously unpublished data for Di-Max M-19 provided by AK Steel, 2000. AC magnetization data derived from exciting power data; see exciting power data page for source data and magnetization data page for conversion information. Chart prepared by EMERE 2004. Information on this page is not guaranteed or endorsed by The Electric Motor Education and Research Foundation. Confirm material properties with material producer prior to use. © 2007 The Electric Motor Education and Research Foundation. MIT OCW excerpts prepared October 2008.

EMERF Electric Motor Education & Research Foundation

This page is excerpted from the Laminations Steels Third Edition CD-ROM published by the Electric Motor Education and Research Foundation and is intended for use in the Massachusetts Institute of Technology OpenCourseWare program. Unauthorized duplication and distribution of this document in violation of the OpenCourseWare license is prohibited. Please refer to the Summary Graphs page, reached by the link at left, for additional information concerning this document.

LAMINATION STEELS THIRD EDITION
Excerpts specially prepared for the Massachusetts Institute of Technology
by the Electric Motor Education and Research Foundation

Non-Oriented Silicon Steels

AK Steel
Di-Max M-19
Fully Processed
.014 inch
(.36 mm, 29 gauge)

Magnetization Data

Summary Graphs
Magnetization Curves
Core Loss Curves
Core Loss Data
Exciting Power Data
Spreadsheet
Other Thicknesses
.0185 inch
.025 inch
AK Steel Product Info

AK Steel Non-Oriented Silicon Steel Menu
Non-Oriented Silicon Steels Menu
Lamination Steels Main Menu

EMERF
L·S·T·E

Magnetization – *B* vs. *H*

DC and Derived AC Magnetizing Force in Oersteds and Amperes per Meter at Various Frequencies – *H*

Magnetic Flux Density in Gausses – B	Oe / A/m DC	50 Hz	60 Hz	100 Hz	150 Hz	200 Hz	300 Hz	400 Hz	600 Hz	1000 Hz	1500 Hz	2000 Hz
1000		0.333 26.5	0.334 26.6	0.341 27.1	0.349 27.8	0.356 28.3	0.372 29.6	0.385 30.6	0.412 32.8	0.485 38.6	0.564 44.9	0.642 51.1
2000	0.401 31.9	0.475 37.8	0.480 38.2	0.495 39.4	0.513 40.8	0.533 42.4	0.567 45.1	0.599 47.7	0.661 52.6	0.808 64.3	0.955 76.0	1.09 86.9
4000	0.564 44.9	0.659 52.4	0.669 53.2	0.700 55.7	0.739 58.8	0.777 61.8	0.846 67.3	0.911 72.5	1.04 82.8	1.30 103	1.56 124	1.80 143
7000	0.845 67.3	0.904 71.9	0.916 72.9	0.968 77.0	1.03 82.0	1.09 87.1	1.21 96.4	1.33 105	1.55 124	2.00 159	2.48 198	2.95 235
10000	1.34 106	1.25 99.3	1.26 101	1.32 105	1.40 112	1.48 118	1.65 131	1.82 145	2.17 173	2.87 228	3.70 294	4.53 361
12000	2.06 164	1.71 136	1.72 137	1.78 141	1.86 148	1.94 155	2.13 169	2.33 185	2.74 218	3.66 291	4.77 380	5.89 469
13000	2.95 235	2.21 176	2.22 177	2.27 181	2.34 186	2.42 193	2.61 208	2.82 224	3.24 258	4.27 340	5.50 438	
14000	5.47 435	3.51 279	3.51 279	3.57 284	3.63 289	3.69 294	3.86 307	4.13 329				
15000	13.9 1109	8.28 659	8.31 662	8.37 666	8.37 666	8.48 675	8.65 689	9.74 775				
15500	22.8 1813	13.6 1084	13.6 1081	13.8 1095	13.7 1092	13.8 1096	14.1 1122	16.5 1313				
16000	35.2 2802	21.6 1718	21.7 1728	21.8 1735	21.8 1738	21.9 1742						
16500	50.9 4054	32.4 2577	32.5 2587	32.6 2597	32.5 2590	32.6 2594						
17000	70.3 5592	46.1 3670	46.2 3680	46.4 3692	46.6 3712	46.6 3711						
18000	122 9711											
19000	202 16044											
20000	394 31319											
21000	1112 88491											

Typical DC and derived AC magnetizing force of as-sheared .014 inch (.36 mm, 29 gauge) Di-Max M-19 fully processed cold-rolled non-oriented silicon steel. DC values in Oersteds from published AK Steel documents. AC values in Oersteds developed from previously unpublished exciting power information provided by AK Steel, 2000. AC values have been derived from RMS Exciting Power using the following formulas:

$$\text{Magnetizing Force in Oersteds} = \frac{88.19 \times \text{Density (g/cc)} \times \text{RMS Exciting Power (VA/lb)}}{\text{Magnetic Flux Density (kG)} \times \text{Frequency (Hz)}}$$

Density of M-19 = 7.65 g/cc
Values in Amperes per meter = Oersteds × 79.58

See exciting power data page for AC exciting power source data. Magnetizing force formula developed by AK Steel; use only for deriving magnetizing force of AK Steel non-oriented silicon steel. Data table preparation, including conversion of data values, by EMERE 2004.

Information on this page is not guaranteed or endorsed by The Electric Motor Education and Research Foundation. Confirm material properties with material producer prior to use. © 2007 The Electric Motor Education and Research Foundation. MIT OCW excerpts prepared October 2008.

EMERF Electric Motor Education & Research Foundation

This page is excerpted from the Laminations Steels Third Edition CD-ROM published by the Electric Motor Education and Research Foundation and is intended for use in the Massachusetts Institute of Technology OpenCourseWare program. Unauthorized duplication and distribution of this document in violation of the OpenCourseWare license is prohibited. Please refer to the Summary Graphs page, reached by the link at left, for additional information concerning this document.

Non-Oriented Silicon Steels

AK Steel
Di-Max M-19
Fully Processed
.014 inch
(.36 mm, 29 gauge)

Core Loss Curves

Summary Graphs
Magnetization Curves
Data
Core Loss Data
Exciting Power Data
Spreadsheet
Other Thicknesses
.0185 inch
.025 inch
AK Steel Product Info

AK Steel Non-Oriented Silicon Steel Menu
Non-Oriented Silicon Steels Menu
Lamination Steels Main Menu

EMERF
L·S·T·E

Total Core Loss – P_c vs. B – by Frequency

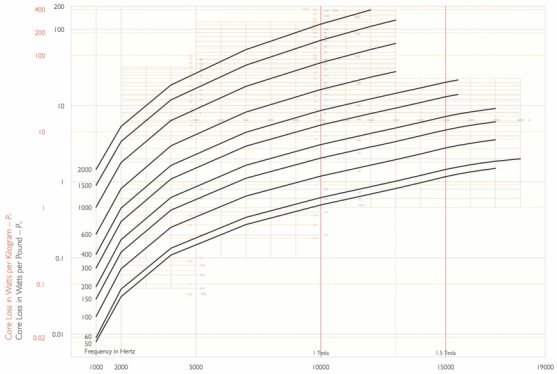

Typical total AC core loss of as-sheared .014 inch (.36 mm, 29 gauge) Di-Max M-19 fully processed cold-rolled non-oriented silicon steel. See core loss data page for data values. Curves developed from previously unpublished information provided by AK Steel, 2000. Chart prepared by EMERF, 2004.

Information on this page is not guaranteed or endorsed by The Electric Motor Education and Research Foundation. Confirm material properties with material producer prior to use. © 2007 The Electric Motor Education and Research Foundation. MIT OCW excerpts prepared October 2008.

This page is excerpted from the Laminations Steels Third Edition CD-ROM published by the Electric Motor Education and Research Foundation and is intended for use in the Massachusetts Institute of Technology OpenCourseWare program. Unauthorized duplication and distribution of this document in violation of the OpenCourseWare license is prohibited. Please refer to the Summary Graphs page, reached by the link at left, for additional information concerning this document.

LAMINATION STEELS THIRD EDITION
Excerpts specially prepared for the Massachusetts Institute of Technology
by the Electric Motor Education and Research Foundation

Non-Oriented Silicon Steels

AK Steel
Di-Max M-19
Fully Processed
.014 inch
(.36 mm, 29 gauge)

Core Loss Data

Summary Graphs
Magnetization Curves
Data
Core Loss Curves
Exciting Power Data
Spreadsheet
Other Thicknesses
.0185 inch
.025 inch
AK Steel Product Info

AK Steel Non-Oriented Silicon Steel Menu
Non-Oriented Silicon Steels Menu
Lamination Steels Main Menu

EMERF
L·S·T·E

Total Core Loss – P_c vs. B

Core Loss in Watts per Pound and Watts per Kilogram at Various Frequencies – P_c

Magnetic Flux Density in Gausses – B	50 Hz (W/lb / W/kg)	60 Hz	100 Hz	150 Hz	200 Hz	300 Hz	400 Hz	600 Hz	1000 Hz	1500 Hz	2000 Hz
1000	0.008 0.0176	0.009 0.0198	0.017 0.0375	0.029 0.0639	0.042 0.0926	0.074 0.163	0.112 0.247	0.205 0.452	0.465 1.02	0.9 1.98	1.45 3.20
2000	0.031 0.0683	0.039 0.0860	0.072 0.159	0.119 0.262	0.173 0.381	0.300 0.661	0.451 0.994	0.812 1.79	1.79 3.94	3.37 7.43	5.32 11.7
4000	0.109 0.240	0.134 0.295	0.252 0.555	0.424 0.934	0.621 1.37	1.09 2.39	1.64 3.60	2.96 6.52	6.34 14.0	11.8 26.1	18.5 40.8
7000	0.273 0.602	0.340 0.749	0.647 1.43	1.11 2.44	1.64 3.61	2.92 6.44	4.45 9.81	8.18 18.0	17.8 39.1	33.7 74.3	54.0 119
10000	0.494 1.09	0.617 1.36	1.18 2.61	2.04 4.50	3.06 6.74	5.53 12.2	8.59 18.9	16.2 35.7	36.3 80.0	71.5 158	117 257
12000	0.687 1.51	0.858 1.89	1.65 3.63	2.86 6.30	4.29 9.46	7.83 17.3	12.2 26.9	23.5 51.8	54.3 120	109 240	179 395
13000	0.812 1.79	1.01 2.23	1.94 4.28	3.36 7.41	5.06 11.2	9.23 20.3	14.4 31.8	27.8 61.3	65.1 143	132 291	
14000	0.969 2.14	1.21 2.66	2.31 5.09	4.00 8.82	6.00 13.2	10.9 24.1	17.0 37.5				
15000	1.16 2.56	1.45 3.19	2.77 6.11	4.76 10.5	7.15 15.8	13.0 28.7	20.1 44.4				
15500	1.26 2.77	1.56 3.44	2.99 6.59	5.15 11.4	7.71 17.0	13.9 30.7	21.6 47.6				
16000	1.34 2.96	1.67 3.67	3.18 7.01	5.47 12.0	8.19 18.0						
16500	1.42 3.13	1.76 3.89	3.38 7.44	5.79 12.8	8.67 19.1						
17000	1.49 3.29	1.85 4.08	3.54 7.80	6.09 13.4	9.13 20.1						
18000		2.00 4.40									

Typical total AC core loss of as-sheared .014 inch (.36 mm, 29 gauge) Di-Max M-19 fully processed cold-rolled non-oriented silicon steel. Watts per pound values from previously unpublished information provided by AK Steel, 2000. Data table preparation, including conversion of data values, by EMERF, 2004.

Watts per kilogram values developed using this formula: Watts per Kilogram = Watts per Pound × 2.204 .

Information on this page is not guaranteed or endorsed by The Electric Motor Education and Research Foundation. Confirm material properties with material producer prior to use. © 2007 The Electric Motor Education and Research Foundation. MIT OCW excerpts prepared October 2008.

This page is excerpted from the Laminations Steels Third Edition CD-ROM published by the Electric Motor Education and Research Foundation and is intended for use in the Massachusetts Institute of Technology OpenCourseWare program. Unauthorized duplication and distribution of this document in violation of the OpenCourseWare license is prohibited. Please refer to the Summary Graphs page, reached by the link at left, for additional information concerning this document.

LAMINATION STEELS THIRD EDITION
Excerpts specially prepared for the Massachusetts Institute of Technology
by the Electric Motor Education and Research Foundation

Non-Oriented Silicon Steels

AK Steel
Di-Max M-19
Fully Processed
.014 inch
(.36 mm, 29 gauge)

Exciting Power Data

Summary Graphs
Magnetization Curves
Data
Core Loss Curves
Data
Spreadsheet
Other Thicknesses
.0185 inch
.025 inch
AK Steel Product Info

AK Steel Non-Oriented Silicon Steel Menu
Non-Oriented Silicon Steels Menu
Lamination Steels Main Menu

EMERF
L·S·T·E

Exciting Power

Exciting Power in Volt-amps per Pound and Volt-amps per Kilogram at Various Frequencies

Magnetic Flux Density in Gausses – B	50 Hz (VA/lb / VA/kg)	60 Hz	100 Hz	150 Hz	200 Hz	300 Hz	400 Hz	600 Hz	1000 Hz	1500 Hz	2000 Hz
1000	0.025 0.055	0.030 0.066	0.051 0.112	0.078 0.172	0.106 0.234	0.165 0.364	0.228 0.503	0.366 0.807	0.719 1.58	1.25 2.76	1.90 4.20
2000	0.07 0.154	0.085 0.187	0.147 0.324	0.228 0.503	0.316 0.696	0.504 1.11	0.710 1.56	1.18 2.59	2.40 5.28	4.25 9.36	6.48 14.3
4000	0.195 0.430	0.238 0.525	0.415 0.915	0.657 1.45	0.921 2.03	1.51 3.32	2.16 4.76	3.70 8.15	7.70 17.0	13.9 30.5	21.4 47.1
7000	0.469 1.03	0.57 1.26	1.00 2.21	1.60 3.53	2.27 5.00	3.77 8.31	5.50 12.1	9.47 21.3	20.8 45.7	38.7 85.2	61.3 135
10000	0.925 2.04	1.12 2.48	1.96 4.32	3.12 6.88	4.39 9.68	7.33 16.2	10.8 23.8	19.3 42.5	42.5 93.7	82.2 181	134 296
12000	1.52 3.34	1.83 4.04	3.16 6.96	4.96 10.9	6.91 15.2	11.4 25.0	16.6 36.5	29.2 64.4	65.1 143	127 280	210 462
13000	2.13 4.69	2.57 5.66	4.38 9.65	6.77 14.9	9.34 20.6	15.1 33.2	21.7 47.8	37.5 82.7	82.3 181	159 350	
14000	3.64 8.02	4.37 9.63	7.41 16.3	11.3 24.9	15.3 33.8	24.0 52.9	34.3 75.6				
15000	9.20 20.3	11.1 24.4	18.6 41.0	27.9 61.5	37.7 83.1	57.7 127	86.6 191				
15500	15.6 34.5	18.7 41.3	31.6 69.6	47.3 104	63.3 140	97.2 214	152 334				
16000	25.6 56.4	30.9 68.1	51.7 114	77.7 171	104 229						
16500	39.6 87.3	47.7 105	79.8 176	119 263	159 351						
17000	58.1 128	69.9 154	117 258	176 389	235 518						

Typical RMS Exciting Power of as-sheared .014 inch (.36 mm, 29 gauge) Di-Max M-19 fully processed cold-rolled non-oriented silicon steel. Volt-amps per pound values from previously unpublished information provided by AK Steel, 2000. Data table preparation, including conversion of data values, by EMERF, 2004.

Volt-amps per kilogram developed using this formula: Volt-amps per kilogram = Volt-amps per pound × 2.204 .

Information on this page is not guaranteed or endorsed by The Electric Motor Education and Research Foundation. Confirm material properties with material producer prior to use. © 2007 The Electric Motor Education and Research Foundation. MIT OCW excerpts prepared October 2008.

This page is excerpted from the Laminations Steels Third Edition CD-ROM published by the Electric Motor Education and Research Foundation and is intended for use in the Massachusetts Institute of Technology OpenCourseWare program. Unauthorized duplication and distribution of this document in violation of the OpenCourseWare license is prohibited. Please refer to the Summary Graphs page, reached by the link at left, for additional information concerning this document.

This page titled 8.6: Semi-Empirical Method of Handling Iron Loss is shared under a CC BY-NC-SA 4.0 license and was authored, remixed, and/or curated by James Kirtley (MIT OpenCourseWare) via source content that was edited to the style and standards of the LibreTexts platform.

9: SYNCHRONOUS MACHINE AND WINDING MODELS

Introduction

The objective here is to develop a simple but physically meaningful model of the synchronous machine, one of the major classes of electric machine. We can look at this model from several different directions. This will help develop an understanding of analysis of machines, particularly in cases where one or another analytical picture is more appropriate than others. Both operation and sizing will be of interest here.

Along the way we will approach machine windings from two points of view. On the one hand, we will approximate windings as sinusoidal distributions of current and flux linkage. Then we will take a concentrated coil point of view and generalize that into a more realistic and useful winding model.

9.1: Relating Rating to Size

9.2: Winding Inductance Calculation

9.3: Physical Picture- Current Sheet Description

9.4: Continuous Approximation to Winding Patterns

9.5: Classical, Lumped-Parameter Synchronous Machine

9.6: Balanced Operation

9.7: Reconciliation of Models

9.8: Per-Unit Systems

9.9: Normal Operation

9.10: Salient Pole Machines- Two-Reaction Theory

This page titled 9: Synchronous machine and winding models is shared under a CC BY-NC-SA 4.0 license and was authored, remixed, and/or curated by James Kirtley (MIT OpenCourseWare) via source content that was edited to the style and standards of the LibreTexts platform.

9.1: Relating Rating to Size

It is possible, even with the simple model we have developed so far, to establish a quantitative relationship between machine size and rating, depending (of course) on elements such as useful flux and surface current density. To start, note that the rating of a machine (motor or generator) is:

$$|P + jQ| = qVI$$

where q is the number of phases, V is the RMS voltage in each phase and I is the RMS current. To establish machine rating we must establish voltage and current, and we do these separately.

Voltage

Assume that our sinusoidal approximation for turns density is valid:

$$n_a(\theta) = \frac{N_a}{2R} \cos p\theta$$

And suppose that working flux density is:

$$B_r(\theta) = B_0 \sin p(\theta - \phi)$$

Now, to compute flux linked by the winding (and consequently to compute voltage), we first compute flux linked by an incremental coil:

$$\lambda_i(\theta) = \int_{\theta - \frac{\pi}{p}}^{\theta} \ell B_r(\theta') R d\theta'$$

Then flux linked by the whole coil is:

$$\lambda_a = p \int_{-\frac{\pi}{2p}}^{\frac{\pi}{2p}} \lambda_i(\theta) n_a(\theta) R d\theta = \frac{\pi}{4} \frac{2\ell R N_a}{p} B_0 \cos p\phi$$

This is instantaneous flux linked when the rotor is at angle ϕ. If the machine is operating at some electrical frequency ω with a phase angle so that $p\phi = \omega t + \delta$, the RMS magnitude of terminal voltage is:

$$V_a = \frac{\omega}{p} \frac{\pi}{4} 2\ell R N_a \frac{B_0}{\sqrt{2}}$$

Finally, note that the useful peak current density that can be used is limited by the fraction of machine periphery used for slots:

$$B_0 = B_s (1 - \lambda_s)$$

where B_s is the flux density in the teeth, limited by saturation of the magnetic material.

Current

The (RMS) magnitude of the current sheet produced by a current of (RMS) magnitude I is:

$$K_z = \frac{q}{2} \frac{N_a I}{2R}$$

And then the current is, in terms of the current sheet magnitude:

$$I = 2RK_z \frac{2}{qN_a}$$

Note that the surface current density is, in terms of area current density J_s, slot space factor λ_s and slot depth h_s:

$$K_z = \lambda_s J_s h_s$$

This gives terminal current in terms of dimensions and useful current density:

$$I = \frac{4R}{qN_a}\lambda_s h_s J_s$$

Rating

Assembling these expressions, machine rating becomes:

$$|P + jQ| = qVI = \frac{\omega}{p} 2\pi R^2 \ell \frac{B_s}{\sqrt{2}} \lambda_s \left(1 - \lambda_s\right) h_s J_s$$

This expression is actually fairly easily interpreted. The product of slot factor times one minus slot factor optimizes rather quickly to $1/4$ (when $\lambda_s = 1$). We could interpret this as:

$$|P = jQ| = A_s u_s \tau^*$$

where the interaction area is:

$$A_s = 2\pi R\ell$$

The surface velocity of interaction is:

$$u_s = \frac{\omega}{p} R = \Omega R$$

and the fragment of expression which “looks like” traction is:

$$\tau^* = h_s J_s \frac{B_s}{\sqrt{2}} \lambda_s \left(1 - \lambda_s\right)$$

Note that this is not quite traction since the current and magnetic flux may not be ideally aligned, and this is why the expression incorporates reactive as well as real power.

This is not quite yet the whole story. The limit on B_s is easily understood to be caused by saturation of magnetic material. The other important element on shear stress density, $h_s J_s$ is a little more involved.

We will do a more complete derivation of winding reactances shortly. Here, start by noting that the per-unit, or normalized synchronous reactance is:

$$x_d = X_d \frac{I}{V} = \frac{\mu_0 R}{pg} \frac{\lambda_s}{1-\lambda_s} \sqrt{2} \frac{h_s J_s}{B_s}$$

While this may be somewhat interesting by itself, it becomes useful if we solve it for $h_s J_a$:

$$h_s J_a = x_d g \frac{p(1-\lambda_s) B_s}{\mu_0 R \lambda_s \sqrt{2}}$$

That is, if x_d is fixed, $h_s J_a$ (and so power) are directly related to air- gap g. Now, to get a limit on g, we must answer the question of how far the field winding can “throw” effective air- gap flux? To understand this question, we must calculate the field current to produce rated voltage, no- load, and then the excess of field current required to accommodate load current.

Under rated operation, per- unit field voltage is:

$$e_{af}^2 = v^2 + \left(x_d i\right)^2 + 2x_d i \sin\psi$$

Or, if at rated conditions v and i are both unity (one per- unit), then

$$e_{af} = \sqrt{1 + x_d^2 + 2x_d \sin\psi}$$

Thus, given a value for x_d and ψ, per- unit internal voltage e_{af} is also fixed. Then field current required can be calculated by first estimating field winding current for “no-load operation”.

$$B_r = \frac{\mu_0 N_f I_{fnl}}{2gp}$$

and rated field current is:

$$I_f = I_{fnl} e_{af}$$

or, required rated field current is:

$$N_f I_f = \frac{2gp(1-\lambda_p)B_s}{\mu_0} e_{af}$$

Next, I_f can be related to a field current density:

$$N_f I_f = \frac{N_{RS}}{2} A_{RS} J_f$$

where N_{RS} is the number of rotor slots and the rotor slot area A_{RS} is

$$A_{RS} = w_R h_R$$

where h_R is rotor slot height and w_R is rotor slot width:

$$w_R = \frac{2\pi R}{N_{RS}} \lambda_R$$

Then:

$$N_f I_f = \pi R \lambda_R h_R J_f$$

Now we have a value for air- gap g:

$$g = \frac{2\mu_0 k_f R \lambda_R h_R J_f}{p(1-\lambda_s)B_s e_{af}}$$

This then gives us useful armature surface current density:

$$h_s J_s = \sqrt{2} \frac{x_d}{e_{af}} \frac{\lambda_R}{\lambda_s} h_R J_f$$

We will not have a lot more to say about this. Note that the ratio of x_d/e_{af} can be quite small (if the per-unit reactance is small), will never be a very large number for any practical machine, and is generally less than one. As a practical matter it is unusual for the per-unit synchronous reatance of a machine to be larger than about 2 or 2.25 per-unit. What this tells us should be obvious: either the rotor or the stator of a machine can produce the dominant limitation on shear stress density (and so on rating). The best designs are “balanced”, with both limits being reached at the same time.

This page titled 9.1: Relating Rating to Size is shared under a CC BY-NC-SA 4.0 license and was authored, remixed, and/or curated by James Kirtley (MIT OpenCourseWare) via source content that was edited to the style and standards of the LibreTexts platform.

9.2: Winding Inductance Calculation

The purpose of this section is to show how the inductances of windings in round- rotor machines with narrow air gaps may be calculated. We deal only with the idealized air- gap magnetic fields, and do not consider slot, end winding, peripheral or skew reactances. We do, however, consider the space harmonics of winding magneto-motive force (MMF).

To start, consider the MMF of a full- pitch, concentrated winding. Assuming that the winding has a total of N turns over p pole-pairs, the MMF is:

$$F = \sum_{\substack{n=1 \\ \text{nodd}}}^{\infty} \frac{4}{n\pi} \frac{NI}{2p} \sin np\phi$$

This leads directly to magnetic flux density in the air- gap:

$$B_r = \sum_{\substack{n=1 \\ \text{nodd}}}^{\infty} \frac{\mu_0}{g} \frac{4}{n\pi} \frac{NI}{2p} \sin np\phi$$

Note that a real winding, which will most likely not be full- pitched and concentrated, will have a winding factor which is the product of pitch and breadth factors, to be discussed later.

Now, suppose that there is a polyphase winding, consisting of more than one phase (we will use three phases), driven with one of two types of current. The first of these is balanced, current:

$$\begin{aligned} I_a &= I\cos(\omega t) \\ I_b &= I\cos\left(\omega t - \frac{2\pi}{3}\right) \\ I_c &= I\cos\left(\omega t + \frac{2\pi}{3}\right) \end{aligned}$$

Conversely, we might consider Zero Sequence currents:

$$I_a = I_b = I_c = I\cos\omega t$$

Then it is possible to express magnetic flux density for the two distinct cases. For the balanced case:

$$B_r = \sum_{n=1}^{\infty} B_{rn} \sin(np\phi \mp \omega t)$$

where

- The upper sign holds for $n = 1, 7, \ldots$
- The lower sign holds for $n = 5, 11, \ldots$
- all other terms are zero

and

$$B_{rn} = \frac{3}{2} \frac{\mu_0}{g} \frac{4}{n\pi} \frac{NI}{2p}$$

The zero- sequence case is simpler: it is nonzero only for the triplen harmonics:

$$B_r = \sum_{n=3,9,\ldots}^{\infty} \frac{\mu_0}{g} \frac{4}{n\pi} \frac{NI}{2p} \frac{3}{2} (\sin(np\phi - \omega t) + \sin(np\phi + \omega t))$$

Next, consider the flux from a winding on the rotor: that will have the same form as the flux produced by a single armature winding, but will be referred to the rotor position:

$$B_{rf} = \sum_{\substack{n=1 \\ \text{nodd}}}^{\infty} \frac{\mu_0}{g} \frac{4}{n\pi} \frac{NI}{2p} \sin np\phi'$$

which is, substituting $\phi' = \phi - \frac{\omega t}{p}$,

$$B_{rf} = \sum_{\substack{n=1 \\ \text{nodd}}}^{\infty} \frac{\mu_0}{g} \frac{4}{n\pi} \frac{NI}{2p} \sin n(p\phi - \omega t)$$

The next step here is to find the flux linked if we have some air- gap flux density of the form:

$$B_r = \sum_{n=1}^{\infty} B_{rn} \sin(np\phi \pm \omega t)$$

Now, it is possible to calculate flux linked by a single- turn, full- pitched winding by:

$$\phi = \int_0^{\frac{\pi}{p}} B_r Rl d\phi$$

and this is:

$$\phi = 2Rl \sum_{n=1}^{\infty} \frac{B_{rn}}{np} \cos(\omega t)$$

This allows us to compute self- and mutual- inductances, since winding flux is:

$$\lambda = N\phi$$

The end of this is a set of expressions for various inductances. It should be noted that, in the real world, most windings are not full- pitched nor concentrated. Fortunately, these shortcomings can be accommodated by the use of winding factors.

The simplest and perhaps best definition of a winding factor is the ratio of flux linked by an actual winding to flux that would have been linked by a full- pitch, concentrated winding with the same number of turns. That is:

$$k_w = \frac{\lambda_{\text{actual}}}{\lambda_{\text{full-pitch}}}$$

It is relatively easy to show, using reciprocity arguments, that the winding factors are also the ratio of effective MMF produced by an actual winding to the MMF that would have been produced by the same winding were it to be full- pitched and concentrated. The argument goes as follows: mutual inductance between any pair of windings is reciprocal. That is, if the windings are designated one and two, the mutual inductance is flux induced in winding one by current in winding two, and it is also flux induced in winding two by current in winding one. Since each winding has a winding factor that influences its linking flux, and since the mutual inductance must be reciprocal, the same winding factor must influence the MMF produced by the winding.

The winding factors are often expressed for each space harmonic, although sometimes when a winding factor is referred to without reference to a harmonic number, what is meant is the space factor for the space fundamental.

Two winding factors are commonly specified for ordinary, regular windings. These are usually called pitch and breadth factors, reflecting the fact that often windings are not full pitched, which means that individual turns do not span a full π electrical radians and that the windings occupy a range or breadth of slots within a phase belt. The breadth factors are ratios of flux linked by a given winding to the flux that would be linked by that winding were it full- pitched and concentrated. These two winding factors are discussed in a little more detail below. What is interesting to note, although we do not prove it here, is that the winding factor of any given winding is the product of the pitch and breadth factors:

$$k_w = k_p k_b$$

With winding factors as defined here and in the sections below, it is possible to define winding inductances. For example, the synchronous inductance of a winding will be the apparent inductance of one phase when the polyphase winding is driven by a balanced set of currents. This is, approximately:

$$L_d = \sum_{n=1,5,7,\ldots}^{\infty} \frac{3}{2} \frac{4}{\pi} \frac{\mu_0 N^2 Rl k_{wn}^2}{p^2 g n^2}$$

This expression is approximate because it ignores the asynchronous interactions between higher order harmonics and the rotor

of the machine. These are beyond the scope of this note.

Zero- sequence inductance is the ratio of flux to current if a winding is excited by zero sequence currents:

$$L_0 = \sum_{n=3,9,\ldots}^{\infty} 3\frac{4}{\pi}\frac{\mu_0 N^2 Rlk_{wm}^2}{p^2 gn^2}$$

And then mutual inductance, as between a field winding (f) and an armature winding (a), is:

$$M(\theta) = \sum_{\substack{n=1 \\ \mathrm{nodd}}}^{\infty} \frac{4}{\pi}\frac{\mu_0 N_f N_a k_{fn} k_{an} Rl}{p^2 gn^2}\cos(np\theta)$$

Now we turn out attention to computing the winding factors for simple, regular winding patterns. We do not prove but only state that the winding factor can, for regular winding patterns, be expressed as the product of a pitch factor and a breadth factor, each of which can be estimated separately.

Pitch factor is found by considering the flux linked by a less- than- full pitched winding. Consider the situation in which radial magnetic flux density is:

$$B_r = B_n \sin(np\phi - \omega t)$$

A winding with pitch α will link flux:

$$\lambda = Nl\int_{\frac{\pi}{2p}-\frac{\alpha}{2p}}^{\frac{\pi}{2p}+\frac{\alpha}{2p}} B_n \sin(np\phi - \omega t) R d\phi$$

Pitch α refers to the angular displacement between sides of the coil, expressed in electrical radians. For a full- pitch coil $\alpha = \pi$.

The flux linked is:

$$\lambda = \frac{2NlRB_n}{np}\sin\left(\frac{n\pi}{2}\right)\sin\left(\frac{n\alpha}{2}\right)$$

The pitch factor is seen to be:

$$k_{pn} = \sin\frac{n\alpha}{2}$$

Now for breadth factor. This describes the fact that a winding may consist of a number of coils, each linking flux slightly out of phase with the others. A regular winding will have a number (say m) coil elements, separated by electrical angle γ.

A full- pitch coil with one side at angle ξ will, in the presence of sinusoidal magnetic flux density, link flux:

$$\lambda = Nl\int_{\frac{\xi}{p}}^{\frac{\pi}{p}-\frac{\xi}{p}} B_n \sin(np\phi - \omega t) R d\phi$$

This is readily evaluated to be:

$$\lambda = \frac{2NlRB_n}{np}\mathrm{Re}\left(e^{j(\omega t - n\xi)}\right)$$

where complex number notation has been used for convenience in carrying out the rest of this derivation.

Now: if the winding is distributed into m sets of slots and the slots are evenly spaced, the angular position of each slot will be:

$$\xi_i = i\gamma - \frac{m-1}{2}\gamma$$

and the number of turns in each slot will be $\frac{N}{mp}$, so that actual flux linked will be:

$$\lambda = \frac{2NlRB_n}{np}\frac{1}{m}\sum_{i=0}^{m-1} Re\left(e^{j(\omega t - n\xi_i)}\right)$$

The breadth factor is then simply:

$$k_b = \frac{1}{m} \sum_{i=0}^{m-1} e^{-jn\left(i\gamma - \frac{m-1}{2}\gamma\right)}$$

Note that this can be written as:

$$k_b = \frac{e^{jn\gamma \frac{m-1}{2}}}{m} \sum_{i=0}^{m} e^{-jni\gamma}$$

Now, focus on that sum. We know that any coverging geometric sum has a simple sum:

$$\sum_{i=0}^{\infty} x^i = \frac{1}{1-x}$$

and that a truncated sum is:

$$\sum_{i=0}^{m-1} = \sum_{i=0}^{\infty} - \sum_{i=m}^{\infty}$$

Then the useful sum can be written as:

$$\sum_{i=0}^{m-1} e^{-jni\gamma} = \left(1 - e^{jnm\gamma}\right) \sum_{i=0}^{\infty} e^{-jni\gamma} = \frac{1-e^{jnm\gamma}}{1-e^{-jn\gamma}}$$

Now, the breadth factor is found:

$$k_{bn} = \frac{\sin \frac{nm\gamma}{2}}{m \sin \frac{n\gamma}{2}}$$

This page titled 9.2: Winding Inductance Calculation is shared under a CC BY-NC-SA 4.0 license and was authored, remixed, and/or curated by James Kirtley (MIT OpenCourseWare) via source content that was edited to the style and standards of the LibreTexts platform.

9.3: Physical Picture- Current Sheet Description

Consider this simple picture. The 'machine' consists of a cylindrical rotor and a cylindrical stator which are coaxial and which have sinusoidal current distributions on their surfaces: the outer surface of the rotor and the inner surface of the stator.

The 'rotor' and 'stator' bodies are made of highly permeable material (we approximate this as being infinite for the time being, but this is something that needs to be looked at carefully later). We also assume that the rotor and stator have current distributions that are axially (z) directed and sinusoidal:

$$K_z^S = K_S \cos p\theta$$
$$K_z^R = K_R \cos p(\theta - \phi)$$

Here, the angle ϕ is the physical angle of the rotor. The current distribution on the rotor goes along. Now: assume that the air-gap dimension g is much less than the radius: \(\ g<

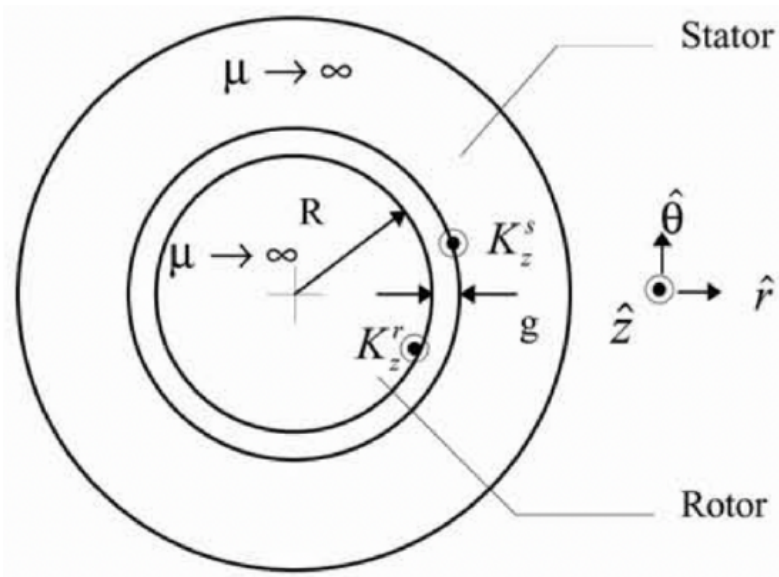

Figure 1: Elementary Machine Model: Axial View

difficult to show that with this assumption the radial flux density Br is nearly uniform across the gap (i.e. not a function of radius) and obeys:

$$\frac{\partial B_r}{\partial \theta} = -\mu_0 \frac{K_z^S + K_z^R}{g}$$

Then the radial magnetic flux density for this case is simply:

$$B_r = -\frac{\mu_0 R}{pg} \left(K_S \sin p\theta + K_R \sin p(\theta - \phi)\right)$$

Now it is possible to compute the traction on rotor and stator surfaces by recognizing that the surface current distributions are the azimuthal magnetic fields: at the surface of the stator, $H_\theta = -K_z^S$ and at the surface of the rotor, $H_\theta = K_z^R$. So at the surface of the rotor, traction is:

$$\tau_\theta = T_{r\theta} = -\frac{\mu_0 R}{pg} \left(K_S \sin p\theta + K_R \sin p(\theta - \phi)\right) K_R \cos p(\theta - \phi)$$

The average of that is simply:

$$< \tau_\theta >= -\frac{\mu_0 R}{2pg} K_S K_R \sin p\phi$$

The same exercise done at the surface of the stator yields the same results (with opposite sign). To find torque, use:

$$T = 2\pi R^2 \ell < \tau_\theta >= \frac{\mu_0 \pi R^3 \ell}{pg} K_S K_R \sin p\phi$$

We can pause here to make a few observations:

1. For a given value of surface currents Ks and Kr, torque goes as the fourth power of linear dimension. The volume of the machine goes as the third power, so this implies that torque capability goes as the 413 power of machine volume. Actually, this understates the situation since the assumed surface current densities are the products of volume current densities and winding depth, which one would expect to increase with machine size. Thus machine torque (and power) densities tend to increase somewhat faster with size.
2. $K_z^S = K_S \cos(p\theta - \omega t)$

   and this pulls the rotor along.

3. For a given pair of current distributions there is a maximum torque that can be sustained, but as long as the torque that is applied to the rotor is less than that value the rotor will adjust to the correct angle.

This page titled 9.3: Physical Picture- Current Sheet Description is shared under a CC BY-NC-SA 4.0 license and was authored, remixed, and/or curated by James Kirtley (MIT OpenCourseWare) via source content that was edited to the style and standards of the LibreTexts platform.

9.4: Continuous Approximation to Winding Patterns

Now let's try to produce those surface current distributions with physical windings. In fact we can't do exactly that yet, but we can approximate a physical winding with a turns distribution that would look like:

$$n_S = \frac{N_S}{2R}\cos p\theta$$
$$n_R = \frac{N_R}{2R}\cos p(\theta - \phi)$$

Note that this implies that N_S and N_R are the total number of turns on the rotor and stator. i.e.:

$$p\int_{-\frac{\pi}{2}}^{\frac{\pi}{2}} n_S R d\theta = N_S$$

Then the surface current densities are as we assumed above, with:

$$K_S = \frac{N_S I_S}{2R} \qquad K_R = \frac{N_R I_R}{2R}$$

So far nothing is different, but with an assumed number of turns we can proceed to computing inductances. It is important to remember what these assumed winding distributions mean: they are the density of wires along the surface of the rotor and stator. A positive value implies a wire with sense in the +z direction, a negative value implies a wire with sense in the -z direction. That is, if terminal current for a winding is positive, current is in the +z direction if n is positive, in the -z direction if n is negative. In fact, such a winding would be made of elementary coils with one half (the negatively going half) separated from the other half (the positively going half) by a physical angle of π/p. So the flux linked by that elemental coil would be:

$$\Phi_i(\theta) = \int_{\theta-\pi/p}^{\theta} \mu_0 H_r(\theta')\,\ell R d\theta'$$

So, if only the stator winding is excited, radial magnetic field is:

$$H_r = -\frac{N_S I_S}{2gp}\sin p\theta$$

and thus the elementary coil flux is:

$$\Phi_i(\theta) = \frac{\mu_0 N_S I_S \ell R}{p^2 g}\cos p\theta$$

Now, this is flux linked by an elementary coil. To get flux linked by a whole winding we must 'add up' the flux linkages of all of the elementary coils. In our continuous approximation to the real coil this is the same as integrating over the coil distribution:

$$\lambda_S = p\int_{-\frac{\pi}{2p}}^{\frac{\pi}{2p}} \Phi_i(\theta) n_S(\theta) R d\theta$$

This evaluates fairly easily to:

$$\lambda_S = \mu_0 \frac{\pi}{4}\frac{\ell R N_S^2}{gp^2} I_s$$

which implies a self-inductance for the stator winding of:

$$L_S = \mu_0 \frac{\pi}{4}\frac{\ell R N_S^2}{gp^2}$$

The same process can be used to find self-inductance of the rotor winding (with appropriate changes of spatial variables), and the answer is:

$$L_R = \mu_0 \frac{\pi}{4}\frac{\ell R N_R^2}{gp^2}$$

To find the mutual inductance between the two windings, excite one and compute flux linked by the other. All of the expressions here can be used, and the answer is:

$$M(\phi) = \mu_0 \frac{\pi}{4} \frac{\ell R N_S N_R}{g p^2} \cos p\phi$$

Now it is fairly easy to compute torque using conventional methods. Assuming both windings are excited, magnetic coenergy is:

$$W_m' = \frac{1}{2} L_S I_S^2 + \frac{1}{2} L_R I_R^2 + M(\phi) I_S I_R$$

and then torque is:

$$T = \frac{\partial W_m'}{\partial \phi} = -\mu_0 \frac{\pi}{4} \frac{\ell R N_S N_R}{g p} I_S I_R \sin p\phi$$

and then substituting for $N_S I_S$ and $N_R I_R$:

$$N_S I_S = 2RK_S$$
$$N_R I_R = 2RK_R$$

we get the same answer for torque as with the field approach:

$$T = 2\pi R^2 \ell < \tau_\theta >= \frac{\mu_0 \pi R^3 \ell}{p g} K_S K_R \sin p\phi$$

This page titled 9.4: Continuous Approximation to Winding Patterns is shared under a CC BY-NC-SA 4.0 license and was authored, remixed, and/or curated by James Kirtley (MIT OpenCourseWare) via source content that was edited to the style and standards of the LibreTexts platform.

9.5: Classical, Lumped-Parameter Synchronous Machine

Now we are in a position to examine the simplest model of a polyphase synchronous machine. Suppose we have a machine in which the rotor is the same as the one we were considering, but the stator has three separate windings, identical but with spatial orientation separated by an electrical angle of $120^\circ = 2\pi/3$. The three stator windings will have the same self- inductance (L_a).

With a little bit of examination it can be seen that the three stator windings will have mutual inductance, and that inductance will be characterized by the cosine of 120°. Since the physical angle between any pair of stator windings is the same,

$$L_{ab} = L_{ac} = L_{bc} = -\tfrac{1}{2}L_a$$

There will also be a mutual inductance between the rotor and each phase of the stator. Using M to denote the magnitude of that inductance:

$$\begin{aligned} M &= \mu_0 \frac{\pi}{4} \frac{\ell R N_a N_f}{g p^2} \\ M_{af} &= M \cos(p\phi) \\ M_{bf} &= M \cos\left(p\phi - \frac{2\pi}{3}\right) \\ M_{cf} &= M \cos\left(p\phi + \frac{2\pi}{3}\right) \end{aligned}$$

We show in Chapter 1 of these notes that torque for this system is:

$$T = -pMi_a i_f \sin(p\phi) - pMi_b i_f \sin\left(p\phi - \tfrac{2\pi}{3}\right) - pMi_c i_f \sin\left(p\phi + \tfrac{2\pi}{3}\right)$$

This page titled 9.5: Classical, Lumped-Parameter Synchronous Machine is shared under a CC BY-NC-SA 4.0 license and was authored, remixed, and/or curated by James Kirtley (MIT OpenCourseWare) via source content that was edited to the style and standards of the LibreTexts platform.

9.6: Balanced Operation

Now, suppose the machine is operated in this fashion: the rotor turns at a constant velocity, the field current is held constant, and the three stator currents are sinusoids in time, with the same amplitude and with phases that differ by 120 degrees.

$$\begin{aligned} p\phi &= \omega t + \delta_i \\ i_f &= I_f \\ i_a &= I\cos(\omega t) \\ i_b &= I\cos\left(\omega t - \frac{2\pi}{3}\right) \\ i_c &= I\cos\left(\omega t + \frac{2\pi}{3}\right) \end{aligned}$$

Straightforward (but tedious) manipulation yields an expression for torque:

$$T = -\tfrac{3}{2} pMII_f \sin\delta_i$$

Operated in this way, with balanced currents and with the mechanical speed consistent with the electrical frequency $(p\Omega = \omega)$, the machine exhibits a constant torque. The phase angle δ_i is called the torque angle, but it is important to use some caution, as there is more than one torque angle.

Now, look at the machine from the electrical terminals. Flux linked by Phase A will be:

$$\lambda_a = L_a i_a + L_{ab} i_b + L_{ac} i_c + MI_f \cos p\phi$$

Noting that the sum of phase currents is, under balanced conditions, zero and that the mutual phase-phase inductances are equal, this simplifies to:

$$\lambda_a = (L_a - L_{ab})\, i_a + MI_f \cos p\phi = L_d i_a + MI_f \cos p\phi$$

where we use the notation L_d to denote synchronous inductance.

Now, if the machine is turning at a speed consistent with the electrical frequency we say it is operating synchronously, and it is possible to employ complex notation in the sinusoidal steady state. Then, note:

$$i_a = I\cos(\omega t + \theta_i) = \mathrm{Re}\left\{ I e^{j\omega t + \theta_i} \right\}$$

If , we can write an expression for the complex amplitude of flux as:

$$\lambda_a = \mathrm{Re}\left\{ \underline{\Lambda}_a e^{j\omega t} \right\}$$

where we have used this complex notation:

$$\begin{aligned} \underline{I} &= I e^{j\theta_i} \\ \underline{I}_f &= I_f e^{j\theta_m} \end{aligned}$$

Now, if we look for terminal voltage of this system, it is:

$$v_a = \tfrac{d\lambda_a}{dt} = \mathrm{Re}\left\{ j\omega \underline{\Lambda}_a e^{j\omega t} \right\}$$

This system is described by the equivalent circuit shown in Figure 2.

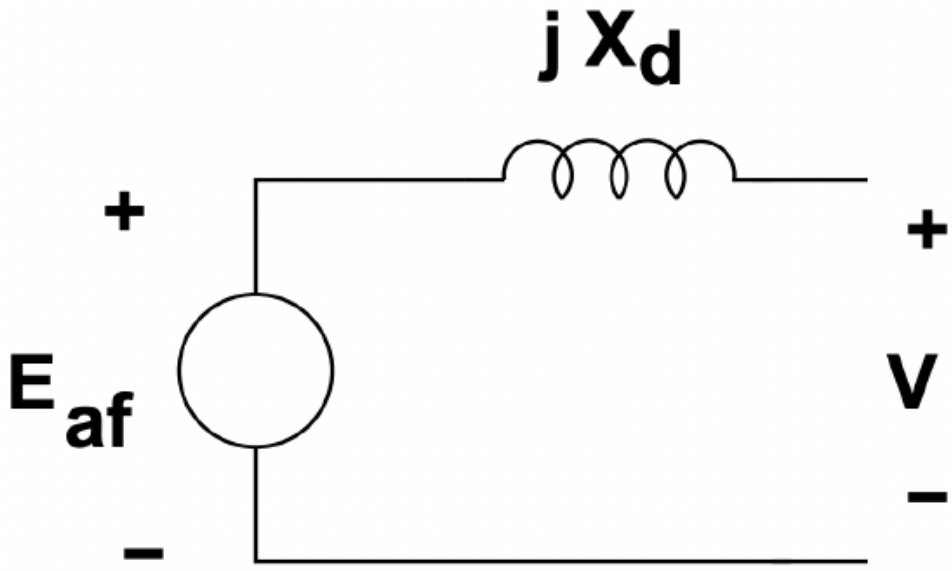

Figure 2: Round Rotor Synchronous Machine Equivalent Circuit

where the internal voltage is:

$$\underline{E}_{af} = j\omega M I_f e^{j\theta_m}$$

Now, if that is connected to a voltage source (i.e. if is fixed), terminal current is:

$$\underline{I} = \frac{\underline{V} - E_{af} e^{j\delta}}{jX_d}$$

where $X_d = \omega L_d$ is the synchronous reactance.

Then real and reactive power (in phase A) are:

$$\begin{aligned} P + jQ &= \frac{1}{2}\underline{VI^*} \\ &= \frac{1}{2}\underline{V}\left(\frac{\underline{V} - E_{af}e^{j\delta}}{jX_d}\right)^* \\ &= \frac{1}{2}\frac{|\underline{V}|^2}{-jX_d} - \frac{1}{2}\frac{VE_{af}e^{j\delta}}{-jX_d} \end{aligned}$$

This makes real and reactive power:

$$\begin{aligned} P_a &= -\frac{1}{2}\frac{VE_{af}}{X_d}\sin\delta \\ Q_a &= \frac{1}{2}\frac{V^2}{X_d} - \frac{1}{2}\frac{VE_{af}X_d}{\cos}\delta \end{aligned}$$

If we consider all three phases, real power is

$$P = -\frac{3}{2}\frac{VE_{af}}{X_d}\sin\delta$$

Now, at last we need to look at actual operation of these machines, which can serve either as motors or as generators.

Vector diagrams that describe operation as a motor and as a generator are shown in Figures 3 and 4, respectively.

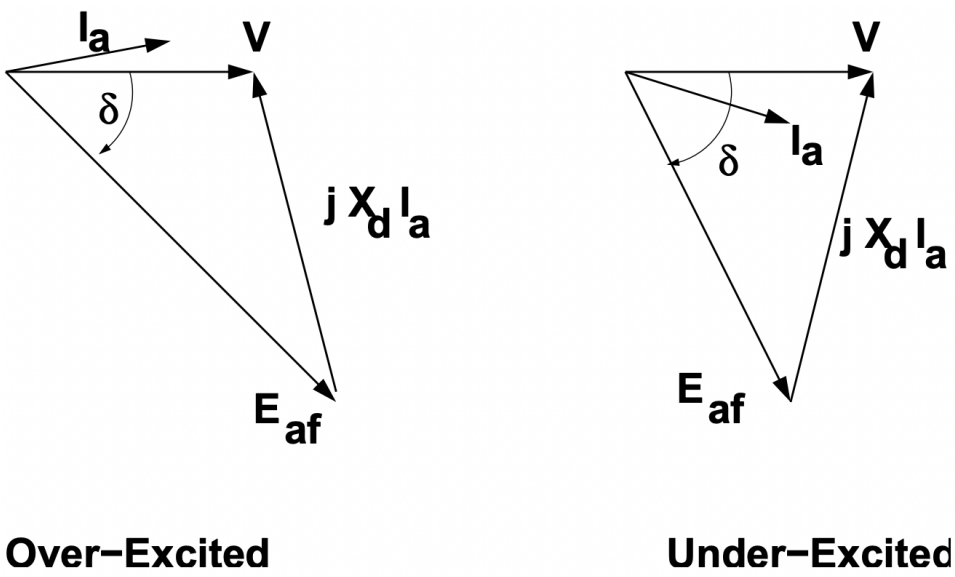

Figure 3: Motor Operation, Under- and Over- Excited

Operation as a generator is not much different from operation as a motor, but it is common to make notations with the terminal current given the opposite ("generator") sign.

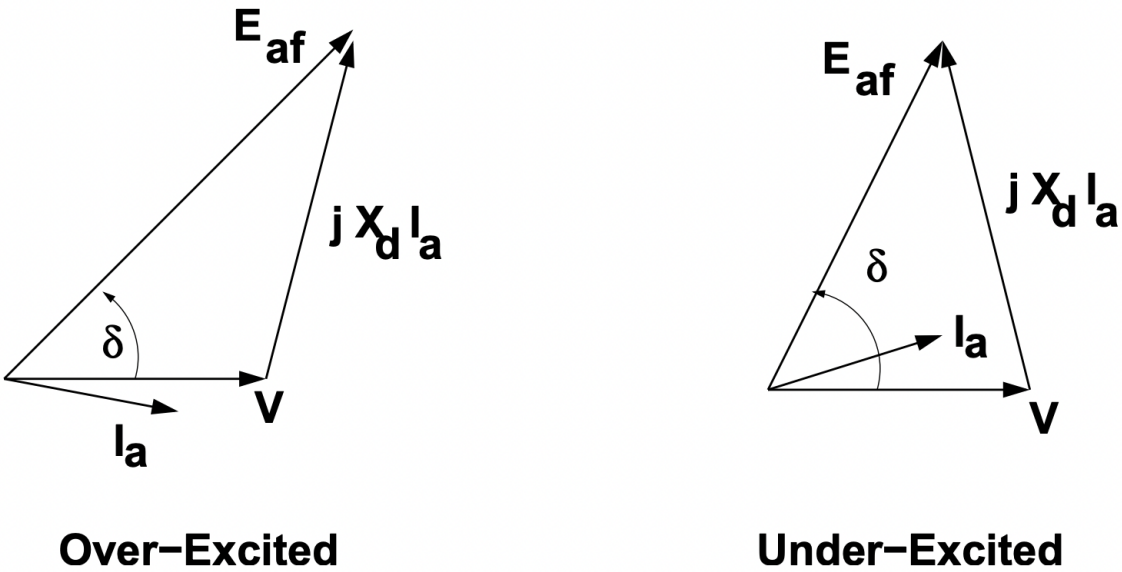

Figure 4: Generator Operation, Under- and Over- Excited

This page titled 9.6: Balanced Operation is shared under a CC BY-NC-SA 4.0 license and was authored, remixed, and/or curated by James Kirtley (MIT OpenCourseWare) via source content that was edited to the style and standards of the LibreTexts platform.

9.7: Reconciliation of Models

We have determined that we can predict its power and/or torque characteristics from two points of view : first, by knowing currents in the rotor and stator we could derive an expression for torque vs. a power angle:

$$T = -\frac{3}{2} pMII_f \sin\delta_i$$

From a circuit point of view, it is possible to derive an expression for power:

$$P = -\frac{3}{2}\frac{VE_{af}}{X_d}\sin\delta$$

and of course since power is torque times speed, this implies that:

$$T = -\frac{3}{2}\frac{VE_{af}}{\Omega X_d}\sin\delta = -\frac{3}{2}\frac{pVE_{af}}{\omega X_d}\sin\delta$$

In this section of the notes we will, first of all, reconcile these notions, look a bit more at what they mean, and then generalize our simple theory to salient pole machines as an introduction to two-axis theory of electric machines.

Torque Angles:

Figure 5 shows a vector diagram that shows operation of a synchronous motor. It represents the MMF's and fluxes from the rotor and stator in their respective positions in space during normal operation. Terminal flux is chosen to be 'real', or occupy the horizontal position. In motor operation the rotor lags by angle δ, so the rotor flux MI_f is shown in that position. Stator current is also shown, and the torque angle between it and the rotor, δ_i is also shown. Now, note that the dotted line OA, drawn perpendicular to a line drawn between the stator flux $L_d I$ and terminal flux Λ_t, has length:

$$|OA| = L_d I \sin\delta_i = \Lambda_t \sin\delta$$

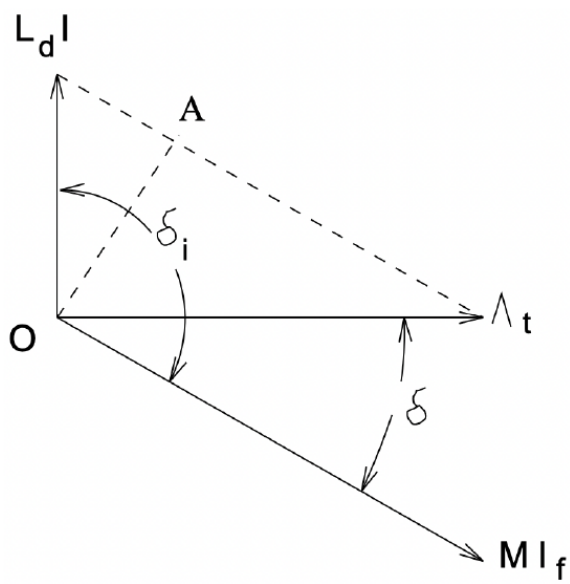

Figure 5: Synchronous Machine Phasor Addition

Then, noting that terminal voltage $V = \omega\Lambda_t$, $E_a = \omega MI_f$ and $X_d = \omega L_d$, straightforward substitution yields:

$$\frac{3}{2}\frac{pVE_{af}}{\omega X_d}\sin\delta = \frac{3}{2} pMII_f \sin\delta_i$$

So the current- and voltage- based pictures do give the same result for torque.

This page titled 9.7: Reconciliation of Models is shared under a CC BY-NC-SA 4.0 license and was authored, remixed, and/or curated by James Kirtley (MIT OpenCourseWare) via source content that was edited to the style and standards of the LibreTexts platform.

9.8: Per-Unit Systems

Before going on, we should take a short detour to look into per-unit systems, a notational device that, in addition to being convenient, will sometimes be conceptually helpful. The basic notion is quite simple: for most variables we will note a base quantity and then, by dividing the variable by the base we have a per-unit version of that variable. Generally we will want to tie the base quantity to some aspect of normal operation. So, for example, we might make the base voltage and current correspond with machine rating. If that is the case, then power base becomes:

$$P_B = 3V_B I_B$$

and we can define, in similar fashion, an impedance base:

$$Z_B = \frac{V_B}{I_B}$$

Now, a little caution is required here. We have defined voltage base as line-neutral and current base as line current (both RMS). That is not necessary. In a three phase system we could very well have defined base voltage to have been line-line and base current to be current in a delta connected element:

$$V_{B\Delta} = \sqrt{3}V_B \quad I_{B\Delta} = \frac{I_B}{\sqrt{3}}$$

In that case the base power would be unchanged but base impedance would differ by a factor of three:

$$P_B = V_{B\Delta} I_{B\Delta} \quad Z_{B\Delta} = 3Z_B$$

However, if we were consistent with actual impedances (note that a delta connection of elements of impedance $3Z$ is equivalent to a wye connection of Z), the per-unit impedances of a given system are not dependent on the particular connection. In fact one of the major advantages of using a per-unit system is that per-unit values are uniquely determined, while ordinary variables can be line-line, line-neutral, RMS, peak, etc., for a large number of variations.

Perhaps unfortunate is the fact that base quantities are usually given as line-line voltage and base power. So that:

$$I_B = \frac{P_B}{\sqrt{3}V_{B\Delta}} \quad Z_B = \frac{V_B}{I_B} = \frac{1}{3}\frac{V_{B\Delta}}{I_{B\Delta}} = \frac{V_{B\Delta}^2}{P_B}$$

Now, we will usually write per-unit variables as lower-case versions of the ordinary variables:

$$v = \frac{V}{V_B} \quad p = \frac{P}{P_B} \quad \text{etc}$$

Thus, written in per-unit notation, real and reactive power for a synchronous machine operating in steady state are:

$$p = -\frac{ve_{af}}{x_d}\sin\delta \quad q = \frac{v^2}{x_d} - \frac{ve_{af}}{x_d}\sin\delta$$

These are, of course, in motor reference coordinates, and represent real and reactive power into the terminals of the machine.

This page titled 9.8: Per-Unit Systems is shared under a CC BY-NC-SA 4.0 license and was authored, remixed, and/or curated by James Kirtley (MIT OpenCourseWare) via source content that was edited to the style and standards of the LibreTexts platform.

9.9: Normal Operation

The synchronous machine is used, essentially interchangeably, as a motor and as a generator. Note that, as a motor, this type of machine produces torque only when it is running at synchronous speed. This is not, of course, a problem for a turbogenerator which is started by its prime mover (e.g. a steam turbine). Many synchronous motors are started as induction machines on their damper cages (sometimes called starting cages). And of course with power electronic drives the machine can often be considered to be “in synchronism” even down to zero speed.

As either a motor or as a generator, the synchronous machine can either produce or consume reactive power. In normal operation real power is dictated by the load (if a motor) or the prime mover (if a generator), and reactive power is determined by the real power and by field current.

Figure 6 shows one way of representing the capability of a synchronous machine. This picture represents operation as a generator, so the signs of p and q are reversed, but all of the other elements of operation are as we ordinarily would expect. If we plot p and q (calculated in the normal way) against each other, we see the construction at the right. If we start at a location $q = -v^2/x_d$, (and remember that normally $v = 1$ per-unit , then the locus of p and q is what would be obtained by swinging a vector of length ve_{af}/x_d over an angle δ. This is called a capability chart because it is an easy way of visualizing what the synchronous machine (in this case generator) can do. There are three easily noted limits to capability. The upper limit is a circle (the one traced out by that vector) which is referred to as field capability. The second limit is a circle that describes constant $|p + jq|$. This is, of course, related to the magnitude of armature current and so this limit is called armature capability. The final limit is related to machine stability, since the torque angle cannot go beyond 90 degrees. In actuality there are often other limits that can be represented on this type of a chart. For example, large synchronous generators typically have a problem with heating of the

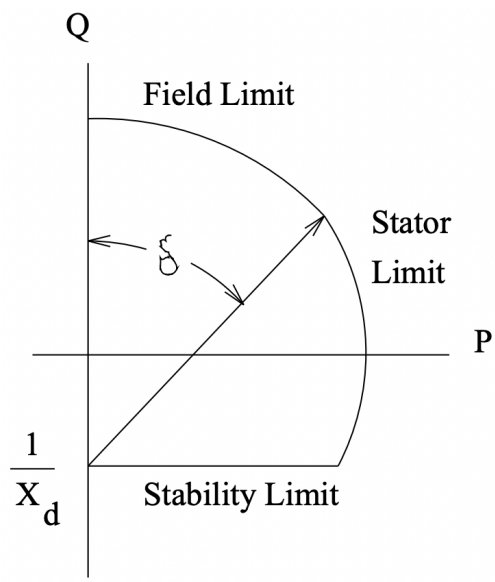

Figure 6: Synchronous Generator Capability Diagram

stator iron when they attempt to operate in highly underexcited conditions (q strongly negative), so that one will often see another limit that prevents the operation of the machine near its stability limit. In very large machines with more than one cooling state (e.g. different values of cooling hydrogen pressure) there may be multiple curves for some or all of the limits.

Another way of describing the limitations of a synchronous machine is embodied in the Vee Curve. An example is shown in Figure 7 . This is a cross-plot of magnitude of armature current with field current. Note that the field and armature current limits are straightforward (and are the right-hand and upper boundaries, respectively, of the chart). The machine stability limit is what terminates each of the curves at the upper left-hand edge. Note that each curve has a minimum at unity power factor. In fact, there is yet another cross-plot possible, called a compounding curve, in which field current is plotted against real power for fixed power factor.

This page titled 9.9: Normal Operation is shared under a CC BY-NC-SA 4.0 license and was authored, remixed, and/or curated by James Kirtley (MIT OpenCourseWare) via source content that was edited to the style and standards of the LibreTexts platform.

9.10: Salient Pole Machines- Two-Reaction Theory

So far, we have been describing what are referred to as “round rotor” machines, in which stator reactance is not dependent on rotor position. This is a pretty good approximation for large turbine generators and many smaller two-pole machines, but it is not a good approximation for many synchronous motors nor for slower speed generators. For many such applications it is more cost effective to wind the field conductors around steel bodies (called poles) which are then fastened onto the rotor body, with bolts or dovetail joints. These produce magnetic anisotropies into the machine which affect its operation. The theory which follows is an introduction to two-reaction theory and consequently for the rotating field transformations that form the basis for most modern dynamic analyses.

Figure 8 shows a very schematic picture of the salient pole machine, intended primarily to show how to frame this analysis. As with the round rotor machine the stator winding is located in slots in the surface of a highly permeable stator core annulus. The field winding is wound around steel pole pieces. We separate the stator current sheet into two components: one aligned with and one

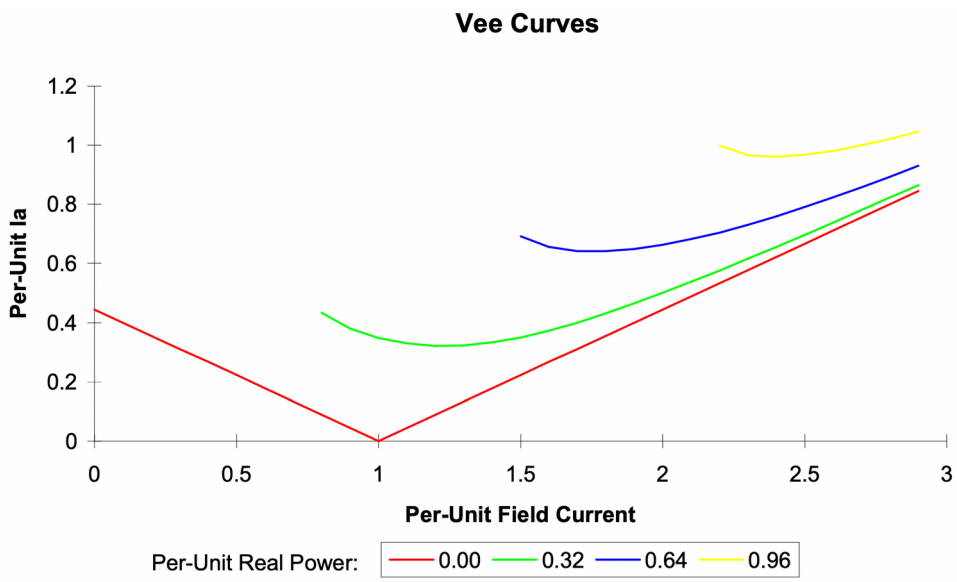

Figure 7: Synchronous Machine Vee Curve

in quadrature to the field. Remember that these two current components are themselves (linear) combinations of the stator phase currents. The transformation between phase currents and the dand q- axis components is straightforward and will appear in Chapter 4 of these notes.

The key here is to separate MMF and flux into two orthogonal components and to pretend that each can be treated as sinusoidal. The two components are aligned with the direct axis and with the quadrature axis of the machine. The direct axis is aligned with the field winding, while the quadrature axis leads the direct by 90 degrees. Then, if ϕ is the angle between the direct axis and the axis of phase a, we can write for flux linking phase a:

$$\lambda_a = \lambda_d \cos\phi - \lambda_q \sin\phi$$

Then, in steady state operation, if $V_a = \frac{d\lambda_a}{dt}$, and $\phi = \omega t + \text{delta}$,

$$V_a = -\omega\lambda_d \sin\phi - \omega\lambda_q \cos\phi$$

which allows us to define:

$$V_d = -\omega\lambda_q$$
$$V_q = \omega\lambda_d$$

one might think of the 'voltage' vector as leading the 'flux' vector by 90 degrees.

Now, if the machine is linear, those fluxes are given by:

$$\lambda_d = L_d I_d + M I_f$$
$$\lambda_q = L_q I_q$$

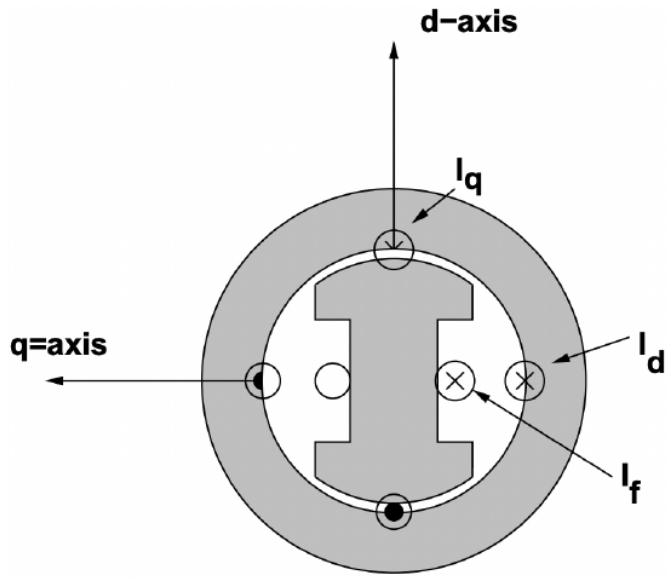

Figure 8: Cartoon of a Salient Pole Synchronous Machine

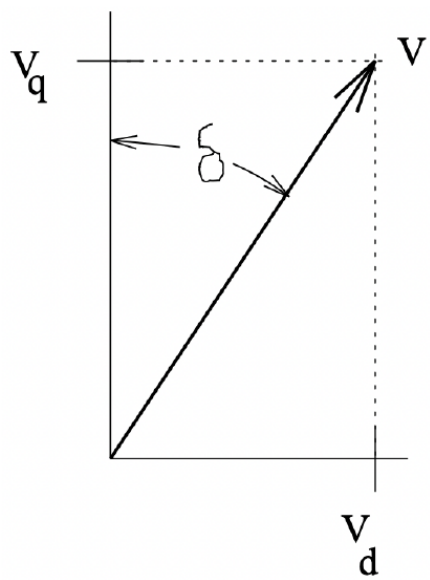

Figure 9: Resolution of Terminal Voltage

Note that, in general, $L_d \neq L_q$. In wound-field synchronous machines, usually $L_d > L_q$. The reverse is true for most salient (buried magnet) permanent magnet machines.

Referring to Figure 9, one can resolve terminal voltage into these components:

$$V_d = V \sin \delta$$
$$V_q = V \cos \delta$$

or:

$$V_d = -\omega\lambda_q = -\omega L_q I_q = V\sin\delta$$
$$V_q = \omega\lambda_d = \omega L_d I_d + \omega M I_f = V\cos\delta$$

which is easily inverted to produce:

$$I_d = \frac{V\cos\delta - E_{af}}{X_d}$$
$$I_q = -\frac{V\sin\delta}{X_q}$$

where

$$X_d = \omega L_d \quad X_q = \omega L_q \quad E_{af} = \omega M I_f$$

Now, we are working in ordinary variables (this discussion should help motivate the use of perunit!), and each of these variables is peak amplitude. Then, if we take up a complex frame of reference:

$$\underline{V} = V_d + jV_q$$
$$\underline{I} = I_d + jI_q$$

complex power is:

$$P + jQ = \tfrac{3}{2}\underline{V}\underline{I}^* = \tfrac{3}{2}\left\{\left(V_d I_d + V_q I_q\right) + j\left(V_q I_d - V_d I_q\right)\right\}$$

or:

$$P = -\frac{3}{2}\left(\frac{VE_{af}}{X_d}\sin\delta + \frac{V^2}{2}\left(\frac{1}{X_d} - \frac{1}{X_q}\right)\sin 2\delta\right)$$
$$Q = \frac{3}{2}\left(\frac{V^2}{2}\left(\frac{1}{X_d} + \frac{1}{X_q}\right) - \frac{V^2}{2}\left(\frac{1}{X_d} - \frac{1}{X_q}\right)\cos 2\delta - \frac{VE_{af}}{X_d}\cos\delta\right)$$

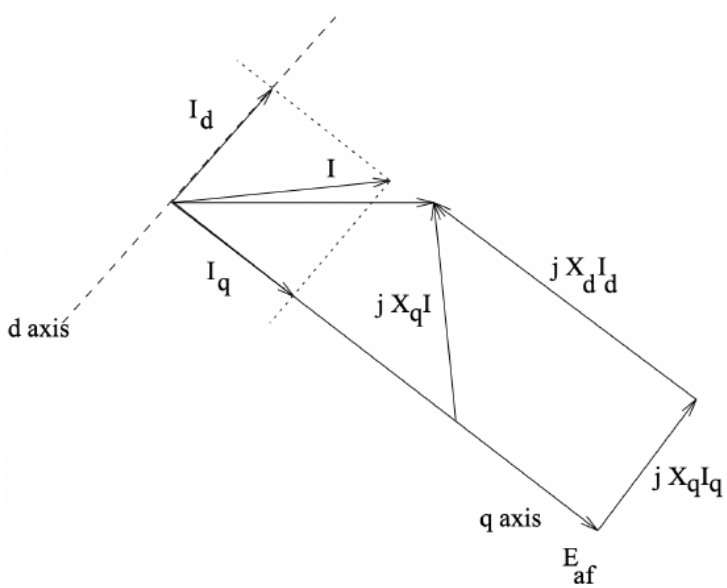

Figure 10: Phasor Diagram: Salient Pole Machine

A phasor diagram for a salient pole machine is shown in Figure 10. This is a little different from the equivalent picture for a round-rotor machine, in that stator current has been separated into its d- and q- axis components, and the voltage drops associated with those components have been drawn separately. It is interesting and helpful to recognize that the internal voltage E_{af} can be expressed as:

$$E_{af} = E_1 + \left(X_d - X_q\right) I_d$$

where the voltage E_1 is on the quadrature axis. In fact, E1 would be the internal voltage of a round rotor machine with reactance

X_q and the same stator current and terminal voltage. Then the operating point is found fairly easily:

$$\delta = -\tan^{-1}\left(\frac{X_q I \sin\psi}{V + X_q I \cos\psi}\right)$$
$$E_1 = \sqrt{\left(V + X_q I \sin\psi\right)^2 + \left(X_q I \cos\psi\right)^2}$$

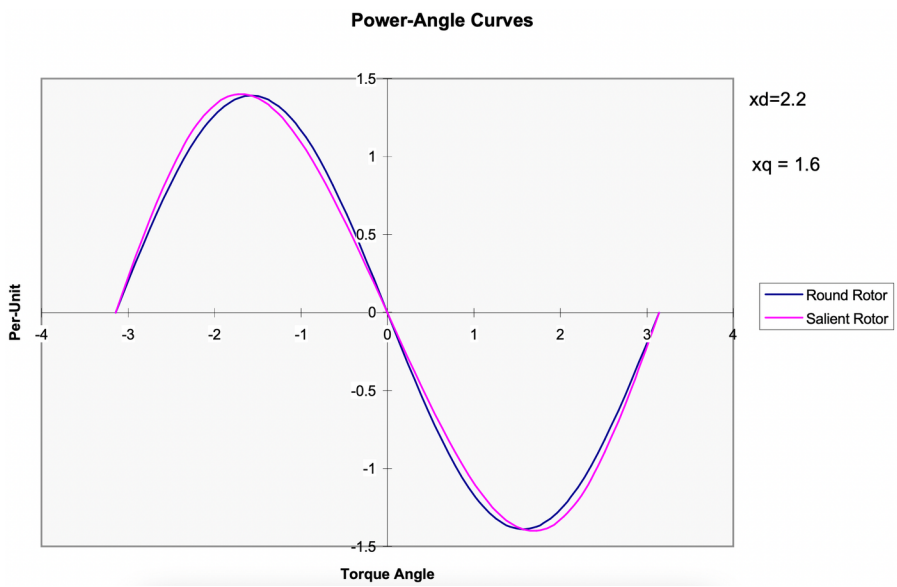

Figure 11: Torque-Angle Curves: Round Rotor and Salient Pole Machines

A comparison of torque-angle curves for a pair of machines, one with a round, one with a salient rotor is shown in Figure 11 . It is not too difficult to see why power systems analysts often neglect saliency in doing things like transient stability calculations.

This page titled 9.10: Salient Pole Machines- Two-Reaction Theory is shared under a CC BY-NC-SA 4.0 license and was authored, remixed, and/or curated by James Kirtley (MIT OpenCourseWare) via source content that was edited to the style and standards of the LibreTexts platform.

10: ANALYTIC DESIGN EVALUATION OF INDUCTION MACHINES

Introduction

Induction machines are perhaps the most widely used of all electric motors. They are generally simple to build and rugged, offer reasonable asynchronous performance: a manageable torque-speed curve, stable operation under load, and generally satisfactory efficiency. Because they are so widely used, they are worth understanding.

In addition to their current economic importance, induction motors and generators may find application in some new applications with designs that are not similar to motors currently in commerce. An example is very high speed motors for gas compressors, perhaps with squirrel cage rotors, perhaps with solid iron (or perhaps with both).

Because it is possible that future, high performance induction machines will be required to have characteristics different from those of existing machines, it is necessary to understand them from first principles, and that is the objective of this document. It starts with a circuit theoretical view of the induction machine. This analysis is strictly appropriate only for wound-rotor machines, but leads to an understanding of more complex machines. This model will be used to explain the basic operation of induction machines. Then we will derive a model for squirrel-cage machines. Finally, we will show how models for solid rotor and mixed solid rotor/squirrel cage machines can be constructed.

The view that we will take in this document is relentlessly classical. All of the elements that we will use are calculated from first principles, and we do not resort to numerical analysis or empirical methods unless we have no choice. While this may seem to be seriously limiting, it serves our basic objective here, which is to achieve an understanding of how these machines work. It is our feeling that once that understanding exists, it will be possible to employ more sophisticated methods of analysis to get more accurate results for those elements of the machines which do not lend themselves to simple analysis.

An elementary picture of the induction machine is shown in Figure 1. The rotor and stator are coaxial. The stator has a polyphase winding in slots. The rotor has either a winding or a cage, also in slots. This picture will be modified slightly when we get to talking of “solid rotor” machines, anon. Generally, this analysis is carried out assuming three phases. As with many systems, this generalizes to different numbers of phases with little difficulty.

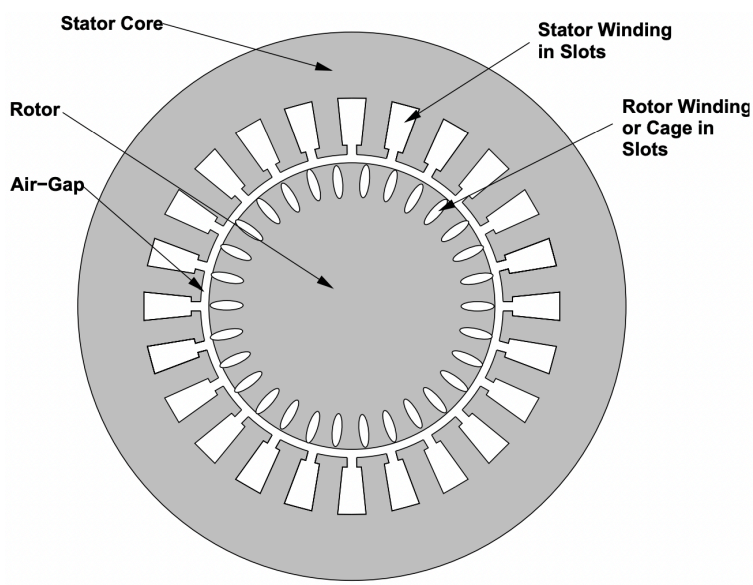

Figure 1: Axial View of an Induction Machine

10.1: Induction Motor Transformer Model

10.2: Operation- Energy Balance

10.3: Squirrel Cage Machine Model

10.4: Solid Iron Rotor Bodies
10.5: Induction Motor Speed Control

This page titled 10: Analytic design evaluation of induction machines is shared under a CC BY-NC-SA 4.0 license and was authored, remixed, and/or curated by James Kirtley (MIT OpenCourseWare) via source content that was edited to the style and standards of the LibreTexts platform.

10.1: Induction Motor Transformer Model

The induction machine has two electrically active elements: a rotor and a stator. In normal operation, the stator is excited by alternating voltage. (We consider here only polyphase machines). The stator excitation creates a magnetic field in the form of a rotating, or traveling wave, which induces currents in the circuits of the rotor. Those currents, in turn, interact with the traveling wave to produce torque. To start the analysis of this machine, assume that both the rotor and the stator can be described by balanced, three – phase windings. The two sets are, of course, coupled by mutual inductances which are dependent on rotor position. Stator fluxes are $(\lambda_a, \lambda_b, \lambda_c)$ and rotor fluxes are $(\lambda_A, \lambda_B, \lambda_C)$. The flux vs. current relationship is given by:

$$\begin{bmatrix} \lambda_a \\ \lambda_b \\ \lambda_c \\ \lambda_A \\ \lambda_B \\ \lambda_C \end{bmatrix} = \begin{bmatrix} \underline{L}_S & \underline{M}_{SR} \\ \underline{M}_{SR}^T & \underline{L}_R \end{bmatrix} \begin{bmatrix} i_a \\ i_b \\ i_c \\ i_A \\ i_B \\ i_C \end{bmatrix}$$

where the component matrices are:

$$\underline{\underline{L}}_S = \begin{bmatrix} L_a & L_{ab} & L_{ab} \\ L_{ab} & L_a & L_{ab} \\ L_{ab} & L_{ab} & L_a \end{bmatrix}$$

$$\underline{\underline{L}}_R = \begin{bmatrix} L_A & L_{AB} & L_{AB} \\ L_{AB} & L_A & L_{AB} \\ L_{AB} & L_{AB} & L_A \end{bmatrix}$$

The mutual inductance part of (1) is a circulant matrix:

$$\underline{\underline{M}}_{SR} = \begin{bmatrix} M\cos(p\theta) & M\cos\left(p\theta + \frac{2\pi}{3}\right) & M\cos\left(p\theta - \frac{2\pi}{3}\right) \\ M\cos\left(p\theta - \frac{2\pi}{3}\right) & M\cos(p\theta) & M\cos\left(p\theta + \frac{2\pi}{3}\right) \\ M\cos\left(p\theta + \frac{2\pi}{3}\right) & M\cos\left(p\theta - \frac{2\pi}{3}\right) & M\cos(p\theta) \end{bmatrix}$$

To carry the analysis further, it is necessary to make some assumptions regarding operation. To start, assume balanced currents in both the stator and rotor:

$$\begin{aligned} i_a &= I_S\cos(\omega t) \\ i_b &= I_S\cos\left(\omega t - \tfrac{2\pi}{3}\right) \\ i_c &= I_S\cos\left(\omega t + \tfrac{2\pi}{3}\right) \end{aligned}$$

$$\begin{aligned} i_A &= I_R\cos\left(\omega_R t + \xi_R\right) \\ i_B &= I_R\cos\left(\omega_R t + \xi_R - \frac{2\pi}{3}\right) \\ i_C &= I_R\cos\left(\omega_R t + \xi_R + \frac{2\pi}{3}\right) \end{aligned}$$

The rotor position θ can be described by

$$\theta = \omega_m t + \theta_0$$

Under these assumptions, we may calculate the form of stator fluxes. As it turns out, we need only write out the expressions for λ_a and λ_A to see what is going on:

$$\begin{aligned} \lambda_a =& (L_a - L_{ab})\, I_s\cos(\omega t) + MI_R\left(\cos\left(\omega_R t + \xi_R\right)\cos p\left(\omega_m + \theta_0\right)\right. \\ &+ \cos\left(\omega_R t + \xi_R + \frac{2\pi}{3}\right)\cos\left(p\left(\omega_m t + \theta_0\right) - \frac{2\pi}{3}\right) + \cos\left(\omega_R t + \xi_R - \frac{2\pi}{3}\right)\cos\left(p\left(\omega_m t + \theta_0\right) + \frac{2\pi}{3}\right) \end{aligned}$$

which, after reducing some of the trig expressions, becomes:

$$\lambda_a = (L_a - L_{ab})\, I_s \cos(\omega t) + \tfrac{3}{2} M I_R \cos\left((p\omega_m + \omega_R)\, t + \xi_R + p\theta_0\right)$$

Doing the same thing for the rotor phase A yields:

$$\begin{aligned}\lambda_A =& M I_s \left(\cos p\left(\omega_m t + \theta_0\right) \cos(\omega t)\right) + \cos\left(p\left(\omega_m t + \theta_0\right) - \frac{2\pi}{3}\right) \cos\left(\omega t - \frac{2\pi}{3}\right) \\ &+ \cos\left(p\left(\omega_m t + \theta_0\right) + \frac{2\pi}{3}\right) \cos\left(\omega t + \frac{2\pi}{3}\right) + (L_A - L_{AB})\, I_R \cos\left(\omega_R t + \xi_R\right)\end{aligned}$$

This last expression is, after manipulating:

$$\lambda_A = \tfrac{3}{2} M I_s \cos\left((\omega - p\omega_m)\, t - p\theta_0\right) + (L_A - L_{AB})\, I_R \cos\left(\omega_R t + \xi_R\right)$$

These two expressions, 9 and 11 give expressions for fluxes in the armature and rotor windings in terms of currents in the same two windings, assuming that both current distributions are sinusoidal in time and space and represent balanced distributions. The next step is to make another assumption, that the stator and rotor frequencies match through rotor rotation. That is:

$$\omega - p\omega_m = \omega_R$$

It is important to keep straight the different frequencies here:

ω is stator electrical frequency

ω_R is rotor electrical frequency

ω_m is mechanical rotation speed

so that $p\omega_m$ is electrical rotation speed.

To refer rotor quantities to the stator frame (i.e. non- rotating), and to work in complex amplitudes, the following definitions are made:

$$\lambda_a = \mathrm{Re}\left(\underline{\Lambda}_a e^{j\omega t}\right)$$

$$\lambda_A = \mathrm{Re}\left(\underline{\Lambda}_A e^{j\omega_R t}\right)$$

$$i_a = \mathrm{Re}\left(\underline{I}_a e^{j\omega t}\right)$$

$$i_A = \mathrm{Re}\left(\underline{I}_A e^{j\omega_R t}\right)$$

With these definitions, the complex amplitudes embodied in 58 and 66 become:

$$\underline{\Lambda}_a = L_S \underline{I}_a + \tfrac{3}{2} M \underline{I}_A e^{j(\xi_R + p\theta_0)}$$

$$\underline{\Lambda}_A = \tfrac{3}{2} M \underline{I}_a e^{-jp\theta_0} + L_R \underline{I}_A e^{j\xi_R}$$

There are two phase angles embedded in these expressions: θ_0 which describes the rotor physical phase angle with respect to stator current and ξ_R which describes phase angle of rotor currents with respect to stator currents. We hereby invent two new rotor variables:

$$\underline{\Lambda}_{AR} = \underline{\Lambda}_A e^{jp\theta})$$

$$\underline{I}_{AR} = \underline{I}_A e^{j(p\theta_0 + \xi_R)}$$

These are rotor flux and current referred to armature phase angle. Note that $\underline{\Lambda}_{AR}$ and $\underline{I}_{AR}$ have the same phase relationship to each other as do $\underline{\Lambda}_A$ and $\underline{I}_A$. Using 19 and 20 in 17 and 18, the basic flux/current relationship for the induction machine becomes:

$$\begin{bmatrix} \underline{\Lambda}_a \\ \underline{\Lambda}_{AR} \end{bmatrix} = \begin{bmatrix} L_S & \frac{3}{2}M \\ \frac{3}{2}M & L_R \end{bmatrix} \begin{bmatrix} \underline{I}_a \\ \underline{I}_{AR} \end{bmatrix}$$

This is an equivalent single- phase statement, describing the flux/current relationship in phase a, assuming balanced operation. The same expression will describe phases b and c.

Voltage at the terminals of the stator and rotor (possibly equivalent) windings is, then:

$$\underline{V}_a = j\omega\underline{\Lambda}_a + R_a\underline{I}_a$$

$$\underline{V}_{AR} = j\omega_R\underline{\Lambda}_{AR} + R_A\underline{I}_{AR}$$

or:

$$\underline{V}_a = j\omega L_S\underline{I}_a + j\omega\frac{3}{2}M\underline{I}_{AR} + R_a\underline{I}_a$$

$$\underline{V}_{AR} = j\omega_R\frac{3}{2}M\underline{I}_a + j\omega_R L_R\underline{I}_{AR} + R_A\underline{I}_{AR}$$

To carry this further, it is necessary to go a little deeper into the machine's parameters. Note that L_S and L_R are synchronous inductances for the stator and rotor. These may be separated into space fundamental and "leakage" components as follows:

$$L_S = L_a - L_{ab} = \frac{3}{2}\frac{4}{\pi}\frac{\mu_0 RlN_S^2k_S^2}{p^2g} + L_{Sl}$$

$$L_R = L_A - L_{AB} = \frac{3}{2}\frac{4}{\pi}\frac{\mu_0 RlN_R^2k_R^2}{p^2g} + L_{Rl}$$

Where the normal set of machine parameters holds:

R is rotor radius

l is active length

g is the effective air- gap

p is the number of pole- pairs

N represents number of turns

k represents the winding factor

S as a subscript refers to the stator

R as a subscript refers to the rotor

L_l is "leakage" inductance

The two leakage terms L_{Sl} and L_{Rl} contain higher order harmonic stator and rotor inductances, slot inducances, end- winding inductances and, if necessary, a provision for rotor skew. Essentially, they are used to represent all flux in the rotor and stator that is not mutually coupled.

In the same terms, the stator- to- rotor mutual inductance, which is taken to comprise only a space fundamental term, is:

$$M = \frac{4}{\pi}\frac{\mu_0 RlN_SN_Rk_Sk_R}{p^2g}$$

Note that there are, of course, space harmonic mutual flux linkages. If they were to be included, they would hair up the analysis substantially. We ignore them here and note that they do have an effect on machine behavior, but that effect is second- order.

Air- gap permeance is defined as:

$$\wp_{ag} = \frac{4}{\pi}\frac{\mu_0 Rl}{p^2g}$$

so that the inductances are:

$$L_S = \frac{3}{2}\wp_{ag}k_S^2N_S^2 + L_{Sl}$$

$$L_R = \frac{3}{2}\wp_{ag}k_R^2N_R^2 + L_{Rl}$$

$$M = \wp_{ag}N_SN_Rk_Sk_R$$

Here we define “slip” s by:

$$\omega_R = s\omega$$

so that

$$s = 1 - \frac{p\omega_m}{\omega}$$

Then the voltage balance equations become:

$$\underline{V}_a = j\omega\left(\frac{3}{2}\wp_{ag}k_S^2N_S^2 + L_{Sl}\right)\underline{I}_a + j\omega\frac{3}{2}\wp_{ag}N_SN_Rk_Sk_R\underline{I}_{AR} + R_a\underline{I}_a$$

$$\underline{V}_{AR} = js\omega\frac{3}{2}\wp_{ag}N_SN_Rk_Sk_R\underline{I}_a + js\omega\left(\frac{3}{2}\wp_{ag}k_R^2N_R^2 + L_{Rl}\right)\underline{I}_{AR} + R_A\underline{I}_{AR}$$

At this point, we are ready to define rotor current referred to the stator. This is done by assuming an effective turns ratio which, in turn, defines an equivalent stator current to produce the same fundamental MMF as a given rotor current:

$$\underline{I}_2 = \frac{N_Rk_R}{N_Sk_S}\underline{I}_{AR}$$

Now, if we assume that the rotor of the machine is shorted so that V AR = 0 and do some manipulation we obtain:

$$\underline{V}_a = j\left(X_M + X_1\right)\underline{I}_a + jX_M\underline{I}_2 + R_a\underline{I}_a$$

$$0 = jX_M\underline{I}_a + j\left(X_M + X_2\right)\underline{I}_2 + \frac{R_2}{s}\underline{I}_2$$

where the following definitions have been made:

$$X_M = \frac{3}{2}\omega\wp_{ag}N_S^2k_S^2$$

$$X_1 = \omega L_{Sl}$$

$$X_2 = \omega L_{Rl}\left(\frac{N_Sk_S}{N_Rk_R}\right)^2$$

$$R_2 = R_A\left(\frac{N_Sk_S}{N_Rk_R}\right)^2$$

These expressions describe a simple equivalent circuit for the induction motorshow in Figure 2. We will amplify on this equivalent circuit anon.

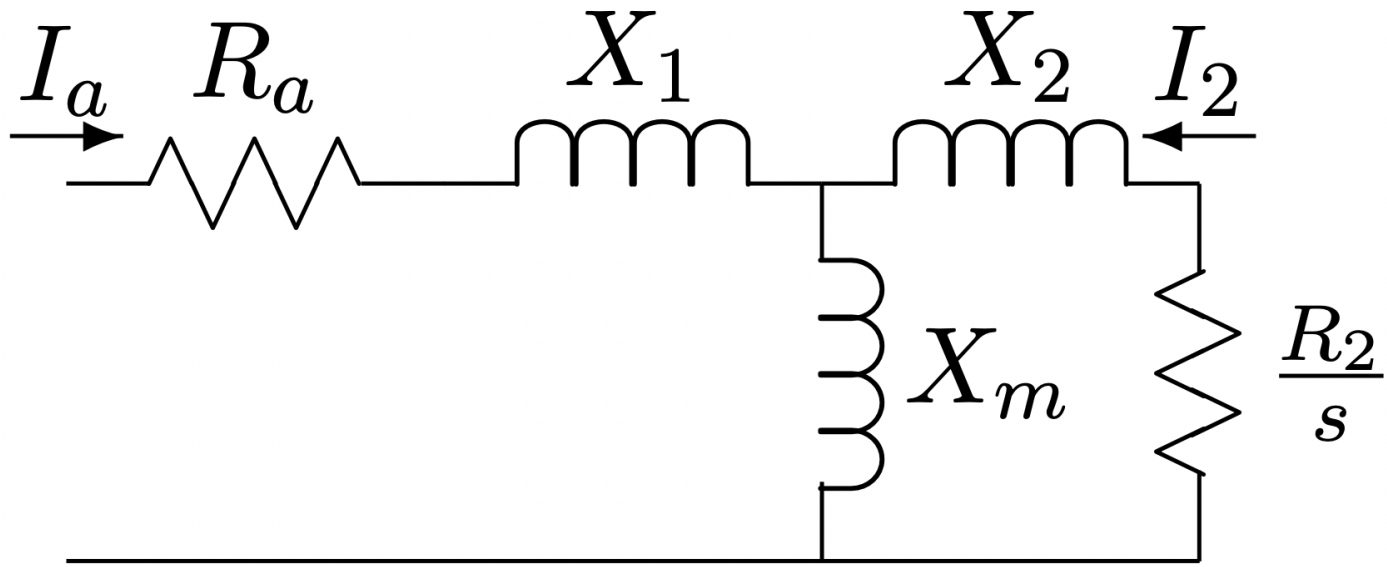

Figure 2: Equivalent Circuit

Effective Air-Gap: Carter's Coefficient

In induction motors, where the air-gap is usually quite small, it is necessary to correct the air-gap permeance for the effect of slot openings. These make the permeance of the air-gap slightly smaller than calculated from the physical gap, effectively making the gap a bit bigger. The ratio of effective to physical gap is:

$$g_{\text{eff}} = g\frac{t+s}{t+s-gf(\alpha)}$$

where

$$f(\alpha) = f\left(\frac{s}{2g}\right) = \alpha\tan(\alpha) - \log\sec\alpha$$

This page titled 10.1: Induction Motor Transformer Model is shared under a CC BY-NC-SA 4.0 license and was authored, remixed, and/or curated by James Kirtley (MIT OpenCourseWare) via source content that was edited to the style and standards of the LibreTexts platform.

10.2: Operation- Energy Balance

Now we are ready to see how the induction machine actually works. Assume for the moment that Figure 2 represents one phase of a polyphase system and that the machine is operated under balanced conditions and that speed is constant or varying only slowly. “Balanced conditions” means that each phase has the same terminal voltage magnitude and that the phase difference between phases is a uniform. Under those conditions, we may analyze each phase separately (as if it were a single phase system). Assume an RMS voltage magnitude of V_t across each phase.

The “gap impedance”, or the impedance looking to the right from the right-most terminal of X_1 is:

$$Z_g = jX_m \| \left(jX_2 + \frac{R_2}{s}\right)$$

A total, or terminal impedance is then

$$Z_t = jX_1 + R_a + Z_g$$

and terminal current is

$$I_t = \frac{V_t}{Z_t}$$

Rotor current is found by using a current divider:

$$I_2 = I_t \frac{jX_m}{jX_2 + \frac{R_2}{s}}$$

“Air-gap” power is then calculated (assuming a three-phase machine):

$$P_{ag} = 3\left|I_2\right|^2 \frac{R_2}{s}$$

This is real (time-average) power crossing the air-gap of the machine. Positive slip implies rotor speed less than synchronous and positive air-gap power (motor operation). Negative slip means rotor speed is higher than synchronous, negative air-gap power (from the rotor to the stator) and generator operation.

Now, note that this equivalent circuit represents a real physical structure, so it should be possible to calculate power dissipated in the physical rotor resistance, and that is:

$$P_s = P_{ag} s$$

(Note that, since both P_{ag} and s will always have the same sign, dissipated power is positive.) The rest of this discussion is framed in terms of motor operation, but the conversion to generator operation is simple. The difference between power crossing the air-gap and power dissipated in the rotor resistance must be converted from mechanical form:

$$P_m = P_{ag} - P_s$$

and electrical input power is:

$$P_{in} = P_{ag} + P_a$$

where armature dissipation is:

$$P_a = 3\left|I_t\right|^2 R_a$$

Output (mechanical) power is

$$P_{\text{Out}} = P_{ag} - P_w$$

Where P_w describes friction, windage and certain stray losses which we will discuss later.

And, finally, efficiency and power factor are:

$$\eta = \frac{P_{\text{Out}}}{P_{in}}$$

$$\cos\psi = \frac{P_{\text{In}}}{3V_t I_t}$$

```
% ----------------------------------------------------
% Torque-Speed Curve for an Induction Motor
% Assumes the classical model
% This is a single-circuit model
% Required parameters are R1, X1, X2, R2, Xm, Vt, Ns
% Assumed is a three-phase motor
% This thing does a motoring, full speed range curve
% Copyright 1994 James L. Kirtley Jr.
% ----------------------------------------------------
s = .002:.002:1;      % vector of slip
N = Ns .* (1 - s);      % Speed, in RPM
oms = 2*pi*Ns/60;      % Synchronous speed
Rr = R2 ./ s;      % Rotor resistance
Zr = j*X2 + Rr;      % Total rotor impedance
Za = par(j*Xm, Zr);      % Air-gap impedance
Zt = R1 + j*X1 +Za;      % Terminal impedance
Ia = Vt ./ Zt;      % Terminal Current
I2 = Ia .* cdiv (Zr, j*Xm);      % Rotor Current
Pag = 3 .* abs(I2) .^2 .* Rr;      % Air-Gap Power
Pm = Pag .* (1 - s);      % Converted Power
Trq = Pag ./ oms;      % Developed Torque
subplot(2, 1, 1)
plot(N, Trq)
title('Induction Motor');
ylabel('N-m');
subplot(2,1,2)
plot(N, Pm);
ylabel('Watts');
```

xlabel('RPM');

Example of Operation

The following MATLAB script generates a torque-speed and power-speed curve for the simple induction motor model described above. Note that, while the analysis does not require that any of the parameters, such as rotor resistance, be independent of rotor speed, this simple script does assume that all parameters are constant.

Example

That MATLAB script has been run for a standard motor with parameters given in Table 1.

Torque vs. speed and power vs. speed are plotted for this motor in Figure 3. These curves were generated by the MATLAB script shown above.

Table 1: Example, Standard Motor

Rating	300	kw
Voltage	440	VRMS, l-l
	254	VRMS, l-n
Stator Resistance R1	.0073	Ω
Rotor Resistance R2	.0064	Ω
Stator Reactance X1	.06	Ω
Rotor Reactance X2	.06	Ω
Magnetizing Reactance Xm	2.5	Ω
Synchronous Speed Ns	1200	RPM

This page titled 10.2: Operation- Energy Balance is shared under a CC BY-NC-SA 4.0 license and was authored, remixed, and/or curated by James Kirtley (MIT OpenCourseWare) via source content that was edited to the style and standards of the LibreTexts platform.

10.3: Squirrel Cage Machine Model

Now we derive a circuit model for the squirrel-cage motor using field analytical techniques. The model consists of two major parts. The first of these is a description of stator flux in terms of stator and rotor currents. The second is a description of rotor current in terms of air- gap flux. The result of all of this is a set of expressions for the elements of the circuit model for the induction machine.

To start, assume that the rotor is symmetrical enough to carry a surface current, the fundamental of which is:

$$\begin{aligned}\bar{K}_r &= \bar{\imath}_z \operatorname{Re}\left(\underline{K}_r e^{j(s\omega t - p\phi')}\right) \\ &= \bar{\imath}_z \operatorname{Re}\left(\underline{K}_r e^{j(\omega t - p\phi)}\right)\end{aligned}$$

Note that in 58 we have made use of the simple transformation between rotor and stator coordinates:

$$\phi' = \phi - \omega_m t$$

and that

$$p\omega_m = \omega - \omega_r = \omega(1 - s)$$

Here, we have used the following symbols:

$\underline{K}_r$	is complex amplitude of rotor surface current
$\mathcal{S}$	is per- unit “slip”
ω	is stator electrical frequency
ω_r	is rotor electrical frequency
ω_m	is rotational speed

The rotor current will produce an air- gap flux density of the form:

$$B_r = Re\left(\underline{B}_r e^{j(\omega t - p\phi)}\right)$$

where

$$\underline{B}_r = -j\mu_0 \frac{R}{pg} \underline{K}_r$$

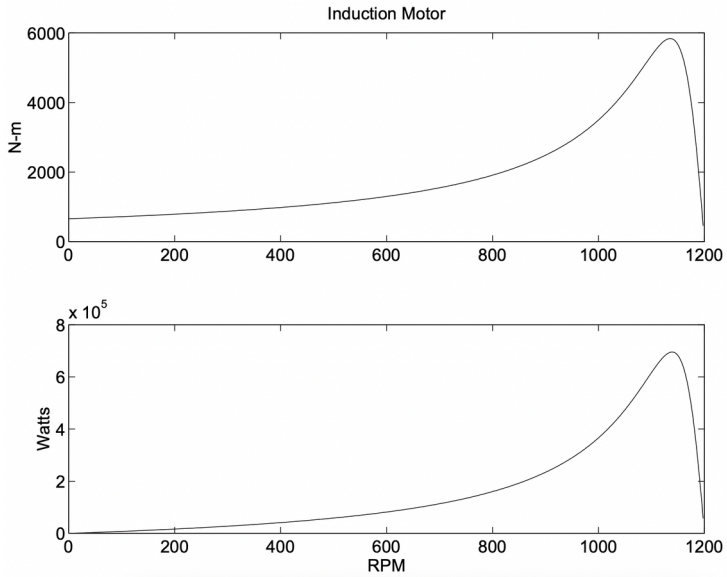

Figure 3: Torque and Power vs. Speed for Example Motor

Note that this describes only radial magnetic flux density produced by the space fundamental of rotor current. Flux linked by the armature winding due to this flux density is:

$$\lambda_{AR} = lN_S k_S \int_{-\frac{\pi}{p}}^{0} B_r(\phi) R d\phi$$

This yields a complex amplitude for λ_{AR}:

$$\lambda_{AR} = \mathrm{Re}\left(\underline{\Lambda}_{AR} e^{j\omega t}\right)$$

where

$$\underline{\Lambda}_{AR} = \frac{2l\mu_0 R^2 N_S k_S}{p^2 g} \underline{K}_r$$

Adding this to flux produced by the stator currents, we have an expression for total stator flux:

$$\underline{\Lambda}_a = \left(\frac{3}{2}\frac{4}{\pi}\frac{\mu_0 N_S^2 R l k_S^2}{p^2 g} + L_{Sl}\right)\underline{I}_a + \frac{2l\mu_0 R^2 N_S k_S}{p^2 g}\underline{K}_r$$

Expression 66 motivates a definiton of an equivalent rotor current I2 in terms of the space fundamental of rotor surface current density:

$$\underline{I}_2 = \frac{\pi}{3}\frac{R}{N_S k_S}\underline{K}_z$$

Then we have the simple expression for stator flux:

$$\underline{\Lambda}_a = \left(L_{ad} + L_{Sl}\right)\underline{I}_a + L_{ad}\underline{I}_2$$

where L_{ad} is the fundamental space harmonic component of stator inductance:

$$L_{ad} = \frac{3}{2}\frac{4}{\pi}\frac{\mu_0 N_S^2 k_S^2 R l}{p^2 g}$$

The second part of this derivation is the equivalent of finding a relationship between rotor flux and I_2. However, since this machine has no discrete windings, we must focus on the individual rotor bars.

Assume that there are N_R slots in the rotor. Each of these slots is carrying some current. If the machine is symmetrical and operating with balanced currents, we may write an expression for current in the kth slot as:

$$i_k = \mathrm{Re}\left(\underline{I}_k e^{js\omega t}\right)$$

where

$$\underline{I}_k = \underline{I} e^{-j\frac{2\pi p}{N_R}}$$

and $\underline{I}$ is the complex amplitude of current in slot number zero. Expression 71 shows a uniform progression of rotor current phase about the rotor. All rotor slots carry the same current, but that current is phase retarded (delayed) from slot to slot because of relative rotation of the current wave at slip frequency.

The rotor current density can then be expressed as a sum of impulses:

$$K_z = Re\left(\sum_{k=0}^{N_R-1} \frac{1}{R}\underline{I} e^{j\left(\omega_r t - k\frac{2\pi p}{N_R}\right)} \delta\left(\phi' - \frac{2\pi k}{N_R}\right)\right)$$

The unit impulse function $\delta()$ is our way of approximating the rotor current as a series of impulsive currents around the rotor.

This rotor surface current may be expressed as a fourier series of traveling waves:

$$K_z = \mathrm{Re}\left(\sum_{n=-\infty}^{\infty} \underline{K}_n e^{j(\omega_r t - np\phi')}\right)$$

Note that in 73, we are allowing for negative values of the space harmonic index n to allow for reverse- rotating waves. This is really part of an expansion in both time and space, although we are considering only the time fundamental part. We may recover the nth space harmonic component of 73 by employing the following formula:

$$\underline{K}_n =< \frac{1}{\pi}\int_0^{2\pi} K_r(\phi, t) e^{-j(\omega_r t - np\phi)} d\phi >$$

Here the brackets <> denote time average and are here beause of the two- dimensional nature of the expansion. To carry out 74 on 72, first expand 72 into its complex conjugate parts:

$$K_r = \frac{1}{2}\sum_{k=0}^{N_R-1}\left\{\frac{\underline{I}}{R} e^{j\left(\omega_r t - k\frac{2\pi p}{N_R}\right)} + \frac{\underline{I}^*}{R} e^{-j\left(\omega_r t - k\frac{2\pi p}{N_R}\right)}\right\} \delta\left(\phi' - \frac{2\pi k}{N_R}\right)$$

If 75 is used in 74, the second half of 75 results in a sum of terms which time average to zero. The first half of the expression results in:

$$\underline{K}_n = \frac{\underline{I}}{2\pi R}\int_0^{2\pi}\sum_{k=0}^{N_R-1} e^{-j\frac{2\pi pk}{N_R}} e^{jnp\phi} \delta\left(\phi - \frac{2\pi k}{N_R}\right) d\phi$$

The impulse function turns the integral into an evaluation of the rest of the integrand at the impulse. What remains is the sum:

$$\underline{K}_n = \frac{\underline{I}}{2\pi R}\sum_{k=0}^{N_R-1} e^{j(n-1)\frac{2\pi kp}{N_R}}$$

The sum in 77 is easily evaluated. It is:

$$\sum_{k=0}^{N_R-1} e^{j\frac{2\pi kp(n-1)}{N_R}} = \begin{cases} N_R & \text{if } (n-1)\frac{P}{N_R} = \text{ integer} \\ 0 & \text{otherwise} \end{cases}$$

The integer in 78 may be positive, negative or zero. As it turns out, only the first three of these (zero, plus and minus one) are important, because these produce the largest magnetic fields and therefore fluxes. These are:

$$\begin{aligned} (n-1)\frac{p}{N_R} &= -1 \text{ or } n = -\frac{N_R - p}{p} \\ &= 0 \quad \text{ or } n = 1 \\ &= 1 \quad \text{ or } n = \frac{N_R + p}{p} \end{aligned}$$

Note that 79 appears to produce space harmonic orders that may be of non- integer order. This is not really true: is is necessary that np be an integer, and 79 will always satisfy that condition.

So, the harmonic orders of interest to us are one and

$$n_+ = \frac{N_R}{p} + 1$$

$$n_- = -\left(\frac{N_R}{p} - 1\right)$$

Each of the space harmonics of the squirrel- cage current will produce radial flux density. A surface current of the form:

$$K_n = Re\left(\frac{N_R \underline{I}}{2\pi R} e^{j(\omega_r t - np\phi')}\right)$$

produces radial magnetic flux density:

$$B_{rn} = \mathrm{Re}\left(\underline{B}_{rn} e^{j(\omega_r t - np\phi')}\right)$$

where

$$\underline{B}_{rn} = -j\frac{\mu_0 N_R \underline{I}}{2\pi npg}$$

In turn, each of the components of radial flux density will produce a component of induced voltage. To calculate that, we must invoke Faraday's law:

$$\nabla \times \bar{E} = -\frac{\partial \bar{B}}{\partial t}$$

The radial component of 85, assuming that the fields do not vary with Z, is:

$$\frac{1}{R}\frac{\partial}{\partial \phi} E_z = -\frac{\partial B_r}{\partial t}$$

Or, assuming an electric field component of the form:

$$E_{zn} = \mathrm{Re}\left(\underline{E}_n e^{j(\omega_r t - np\phi)}\right)$$

Using 84 and 87 in 86, we obtain an expression for electric field induced by components of airgap flux:

$$\underline{E}_n = \frac{\omega_r R}{np}\underline{B}_n$$

$$\underline{E}_n = -j\frac{\mu_0 N_R \omega_r R}{2\pi g (np)^2}\underline{I}$$

Now, the total voltage induced in a slot pushes current through the conductors in that slot. We may express this by:

$$\underline{E}_1 + \underline{E}_{n-} + \underline{E}_{n+} = \underline{Z}_{slot}\underline{I}$$

Now: in 90, there are three components of air- gap field. E_1 is the space fundamental field, produced by the space fundamental of rotor current as well as by the space fundamental of stator current. The other two components on the left of 90 are produced only by rotor currents and actually represent additional reactive impedance to the rotor. This is often called zigzag leakage inductance. The parameter Zslot represents impedance of the slot itself: resistance and reactance associated with cross- slot magnetic fields. Then 90 can be re-written as:

$$\underline{E}_1 = \underline{Z}_{slot}\underline{I} + j\frac{\mu_0 N_R \omega_r R}{2\pi g}\left(\frac{1}{(n_+ p)^2} + \frac{1}{(n_- p)^2}\right)\underline{I}$$

To finish this model, it is necessary to translate 91 back to the stator. See that 67 and 77 make the link between $\underline{I}$ and $\underline{I}_2$:

$$\underline{I}_2 = \frac{N_R}{6N_S k_S}\underline{I}$$

Then the electric field at the surface of the rotor is:

$$\underline{E}_1 = \left[\frac{6N_S k_S}{N_R}\underline{Z}_{slot} + j\omega_r \frac{3}{\pi}\frac{\mu_0 N_S k_S R}{g}\left(\frac{1}{(n_+ p)^2} + \frac{1}{(n_- p)^2}\right)\right]\underline{I}_2$$

This must be translated into an equivalent stator voltage. To do so, we use 88 to translate 93 into a statement of radial magnetic field, then find the flux liked and hence stator voltage from that. Magnetic flux density is:

$$
\begin{aligned}
\underline{B}_r &= \frac{p\underline{E}_1}{\omega_r R} \\
&= \left[\frac{6N_S k_S p}{N_R R}\left(\frac{R_{slot}}{\omega_r} + jL_{slot}\right) + j\frac{3}{\pi}\frac{\mu_0 N_S k_S p}{g}\left(\frac{1}{(n_+p)^2} + \frac{1}{(n_-p)^2}\right)\right]\underline{I}_2
\end{aligned}
$$

where the slot impedance has been expressed by its real and imaginary parts:

$$\underline{Z}_{slot} = R_{slot} + j\omega_r L_{slot} \tag{10.3.1}$$

Flux linking the armature winding is:

$$\lambda_{ag} = N_S k_S l R \int_{-\frac{\pi}{2p}}^{0} \mathrm{Re}\left(\underline{B}_r e^{j(\omega t - p\phi)}\right) d\phi \tag{10.3.2}$$

Which becomes:

$$\lambda_{ag} = \mathrm{Re}\left(\underline{\Lambda}_{ag} e^{j\omega t}\right) \tag{10.3.3}$$

where:

$$\underline{\Lambda}_{ag} = j\frac{2N_S k_S l R}{p}\underline{B}_r \tag{10.3.4}$$

Then “air- gap” voltage is:

$$
\begin{aligned}
\underline{V}_{ag} &= j\omega\underline{\Lambda}_{ag} = -\frac{2\omega N_S k_S l R}{p}\underline{B}_r \\
&= -\underline{I}_2\left[\frac{12lN_S^2k_S^2}{N_R}\left(j\omega L_{slot} + \frac{R_2}{s}\right) + j\omega\frac{6}{\pi}\frac{\mu_0 R l N_S^2 k_S^2}{g}\left(\frac{1}{(n_+p)^2} + \frac{1}{(n_-p)^2}\right)\right]
\end{aligned}
\tag{10.3.5}
$$

Expression 99 describes the relationship between the space fundamental air- gap voltage $\underline{V}_{ag}$ and rotor current $\underline{I}_2$. This expression fits the equivalent circuit of Figure 4 if the definitions made below hold:

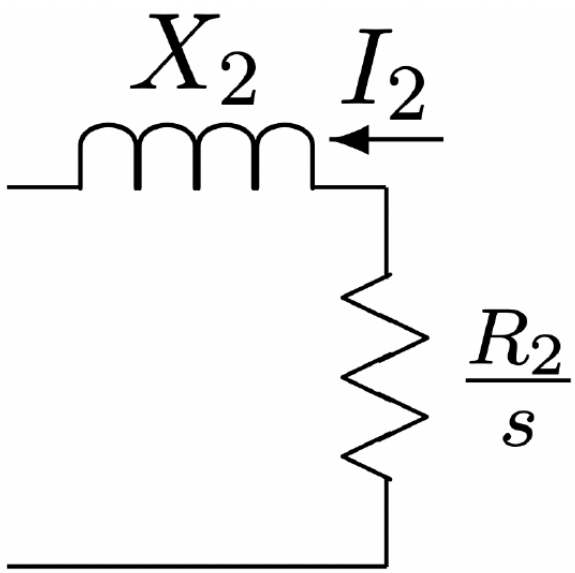

Figure 4: Rotor Equivalent Circuit

$$X_2 = \omega\frac{12lN_S^2k_S^2}{N_R}L_{\text{slot}} + \omega\frac{6}{\pi}\frac{\mu_0 R l N_S^2 k_S^2}{g}\left(\frac{1}{(N_R+p)^2} + \frac{1}{(N_R-p)^2}\right) \tag{10.3.6}$$

$$R_2 = \frac{12lN_S^2k_S^2}{N_R}R_{\text{slot}} \tag{10.3.7}$$

The first term in 100 expresses slot leakage inductance for the rotor. Similarly, 101 expresses rotor resistance in terms of slot resistance. Note that Lslot and Rslot are both expressed per unit length. The second term in 100 expresses the “zigzag” leakage inductance resulting from harmonics on the order of rotor slot pitch.

Next, see that armature flux is just equal to air- gap flux plus armature leakage inductance. That is, 68 could be written as:

$$\underline{\Lambda}_a = \underline{\Lambda}_{ag} + L_{al}\underline{I}_a \tag{10.3.8}$$

There are a number of components of stator slot leakage L_{al}, each representing flux paths that do not directly involve the rotor. Each of the components adds to the leakage inductance. The most prominent components of stator leakage are referred to as slot, belt, zigzag, end winding, and skew. Each of these will be discussed in the following paragraphs.

Belt and zigzag leakage components are due to air- gap space harmonics. As it turns out, these are relatively complicated to estimate, but we may get some notion from our first- order view of the machine. The trouble with estimating these leakage components is that they are not really independent of the rotor, even though we call them “leakage”. Belt harmonics are of order $n = 5$ and $n = 7$. If there were no rotor coupling, the belt harmonic leakage terms would be:

$$X_{ag5} = \frac{3}{2}\frac{4}{\pi}\frac{\mu_0 N_S^2 k_5^2 Rl}{5^2 p^2 g} \tag{10.3.9}$$

$$X_{ag7} = \frac{3}{2}\frac{4}{\pi}\frac{\mu_0 N_S^2 k_7^2 Rl}{7^2 p^2 g} \tag{10.3.10}$$

The belt harmonics link to the rotor, however, and actually appear to be in parallel with components of rotor impedance appropriate to 5p and 7p pole- pair machines. At these harmonic orders we can usually ignore rotor resistance so that rotor impedance is purely inductive. Those components are:

$$X_{2,5} = \omega\frac{12lN_S^2k_5^2}{N_R}L_{\text{slot}} + \omega\frac{6}{\pi}\frac{\mu_0 RlN_S^2k_5^2}{g}\left(\frac{1}{(N_R+5p)^2} + \frac{1}{(N_R-5p)^2}\right) \tag{10.3.11}$$

$$X_{2,7} = \omega\frac{12lN_S^2k_7^2}{N_R}L_{\text{slot}} + \omega\frac{6}{\pi}\frac{\mu_0 RlN_S^2k_7^2}{g}\left(\frac{1}{(N_R+7p)^2} + \frac{1}{(N_R-7p)^2}\right) \tag{10.3.12}$$

In the simple model of the squirrel cage machine, because the rotor resistances are relatively small and slip high, the effect of rotor resistance is usually ignored. Then the fifth and seventh harmonic components of belt leakage are:

$$X_5 = X_{ag5}\|X_{2,5} \tag{10.3.13}$$

$$X_7 = X_{ag7}\|X_{2,7} \tag{10.3.14}$$

Stator zigzag leakage is from those harmonics of the orders $pn_s = N_{slots} \pm p$ where N_{slots}.

$$X_z = \frac{3}{2}\frac{4}{\pi}\frac{\mu_0 N_S^2 Rl}{g}\left(\frac{k_{n_s+}}{(N_{\text{slots}}+p)^2} + \frac{k_{n_s-}}{(N_{\text{slots}}-p)^2}\right) \tag{10.3.15}$$

Note that these harmonic orders do not tend to be shorted out by the rotor cage and so no direct interaction with the cage is ordinarily accounted for.

In order to reduce saliency effects that occur because the rotor teeth will tend to try to align with the stator teeth, induction motor designers always use a different number of slots in the rotor and stator. There still may be some tendency to align, and this produces “cogging” torques which in turn produce vibration and noise and, in severe cases, can retard or even prevent starting. To reduce this tendency to “cog”, rotors are often built with a little “skew”, or twist of the slots from one end to the other. Thus, when one tooth is aligned at one end of the machine, it is un-aligned at the other end. A side effect of this is to reduce the stator and rotor coupling by just a little, and this produces leakage reactance. This is fairly easy to estimate. Consider, for example, a space-fundamental flux density $B_r = B_1 \cos p\theta$, linking a (possibly) skewed full-pitch current path:

$$\lambda = \int_{-\frac{l}{2}}^{\frac{l}{2}} \int_{-\frac{\pi}{2p}+\frac{\varsigma}{p}\frac{x}{l}}^{\frac{\pi}{2p}+\frac{\varsigma}{p}\frac{x}{l}} B_1 \cos p\theta R d\theta dx$$

Here, the skew in the rotor is ς electrical radians from one end of the machine to the other. Evaluation of this yields:

$$\lambda = \frac{2B_1 Rl}{p} \frac{\sin\frac{\zeta}{2}}{\frac{\zeta}{2}}$$

Now, the difference between what would have been linked by a non-skewed rotor and what is linked by the skewed rotor is the skew leakage flux, now expressible as:

$$X_k = X_{ag}\left(1 - \frac{\sin\frac{\zeta}{2}}{\frac{\zeta}{2}}\right)$$

The final component of leakage reactance is due to the end windings. This is perhaps the most difficult of the machine parameters to estimate, being essentially three-dimensional in nature. There are a number of ways of estimating this parameter, but for our purposes we will use a simplified parameter from AlgerEquation ???:

$$X_e = \frac{14}{4\pi^2}\frac{q}{2}\frac{\mu_0 R N_a^2}{p^2}(p - 0.3)$$

As with all such formulae, extreme care is required here, since we can give little guidance as to when this expression is correct or even close. And we will admit that a more complete treatment of this element of machine parameter construction would be an improvement.

Harmonic Order Rotor Resistance and Stray Load Losses

It is important to recognize that the machine rotor "sees" each of the stator harmonics in essentially the same way, and it is quite straightforward to estimate rotor parameters for the harmonic orders, as we have done just above. Now, particularly for the "belt" harmonic orders, there are rotor currents flowing in response to stator mmf's at fifth and seventh space harmonic order. The resistances attributable to these harmonic orders are:

$$R_{2,5} = \frac{12 l N_s^2 k_5^2}{N_R} R_{\text{slot},5} \tag{10.3.16}$$

$$R_{2,7} = \frac{12 l N_s^2 k_7^2}{N_R} R_{\text{slot},7} \tag{10.3.17}$$

The higher-order slot harmonics will have relative frequencies (slips) that are:

$$s_n = 1 \mp (1 - s)n \left\{ \begin{array}{c} n = 6k + 1 \\ n = 6k - 1 \end{array} \right\} \text{k an integer} \tag{10.3.18}$$

The induction motor electromagnetic interaction can now be described by an augmented magnetic circuit as shown in Figure 17. Note that the terminal flux of the machine is the sum of all of the harmonic fluxes, and each space harmonic is excited by the same current so the individual harmonic components are in series.

Each of the space harmonics will have an electromagnetic interaction similar to the fundamental: power transferred across the air-gap is:

$$P_{em,n} = 3 I_{2,n}^2 \frac{R_{2,n}}{s_n}$$

Of course dissipation in each circuit is:

$$P_{d,n} = 3 I_{2,n}^2 R_{2,n}$$

leaving

$$P_{m,n} = 3 I_{2,n}^2 \frac{R_{2,n}}{s_n}(1 - s_n)$$

Note that this equivalent circuit has provision for two sets of circuits which look like "cages". In fact one of these sets is for the solid rotor body if that exists. We will discuss that anon. There is also a provision (r_c) for loss in the stator core iron.

Power deposited in the rotor harmonic resistance elements is characterized as "stray load" loss because it is not easily computed from the simple machine equivalent circuit.

Slot Models

Some of the more interesting things that can be done with induction motors have to do with the shaping of rotor slots to achieve particular frequency-dependent effects. We will consider here three cases, but there are many other possibilities.

First, suppose the rotor slots are representable as being rectangular, as shown in Figure 5, and assume that the slot dimensions are such that diffusion effects are not important so that current in the slot conductor is approximately uniform. In that case, the slot resistance and inductance per unit length are:

$$R_{\text{slot}} = \frac{1}{w_s h_s \sigma} \tag{10.3.19}$$

$$L_{\text{slot}} = \mu_0 \frac{h_s}{3w_s} \tag{10.3.20}$$

The slot resistance is obvious, the slot inductance may be estimated by recognizing that if the current in the slot is uniform, magnetic field crossing the slot must be:

$$H_y = \frac{I}{w_s}\frac{x}{h_s}$$

Then energy stored in the field in the slot is simply:

$$\frac{1}{2}L_{\text{slot}}I^2 = w_s \int_0^{h_s} \frac{\mu_0}{2}\left(\frac{Ix}{w_s h_s}\right)^2 dx = \frac{1}{6}\frac{\mu_0 h_s}{w_s} I^2$$

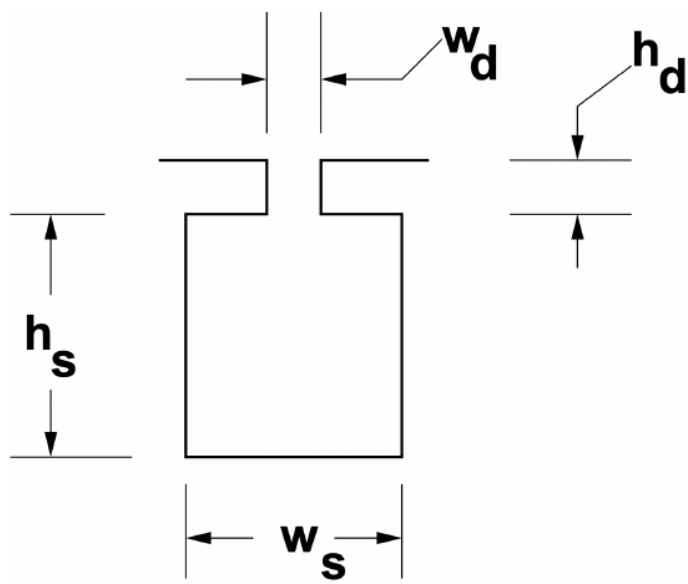

Figure 5: Single Slot

Deep Slots

Now, suppose the slot is not small enough that diffusion effects can be ignored. The slot becomes “deep” to the extent that its depth is less than (or even comparable to) the skin depth for conduction at slip frequency. Conduction in this case may be represented by using the Diffusion Equation:

$$\nabla^2 \bar{H} = \mu_0 \sigma \frac{\partial \bar{H}}{\partial t}$$

In the steady state, and assuming that only cross-slot flux (in the y direction) is important, and the only variation that is important is in the radial (x) direction:

$$\frac{\partial^2 H_y}{\partial x^2} = j\omega_s \mu_0 \sigma H_y$$

This is solved by solutions of the form:

$$H_y = H_{\pm} e^{\pm(1+j)\frac{x}{\delta}}$$

where the skin depth is

$$\delta = \sqrt{\frac{2}{\omega_s \mu_0 \sigma}}$$

Since H_y must vanish at the bottom of the slot, it must take the form:

$$H_y = H_{\text{top}} \frac{\sinh(1+j)\frac{x}{\delta}}{\sinh(1+j)\frac{h_s}{\delta}}$$

Since current is the curl of magnetic field,

$$J_z = \sigma E_z = \frac{\partial H_y}{\partial x} = H_{\text{top}} \frac{1+j}{\delta} \frac{\cosh(1+j)\frac{h_s}{\delta}}{\sinh(1+j)\frac{h_s}{\delta}}$$

Then slot impedance, per unit length, is:

$$Z_{\text{slot}} = \frac{1}{w_s} \frac{1+j}{\sigma\delta} \coth(1+j)\frac{h_s}{\delta}$$

Of course the impedance (purely reactive) due to the slot depression must be added to this. It is possible to extract the real and imaginary parts of this impedance (the process is algebraically a bit messy) to yield:

$$\begin{aligned} R_{\text{slot}} &= \frac{1}{w_s \sigma \delta} \frac{\sinh 2\frac{h_s}{\delta} + \sin 2\frac{h_s}{\delta}}{\cosh 2\frac{h_s}{\delta} - \cos 2\frac{h_s}{\delta}} \\ L_{\text{slot}} &= \mu_0 \frac{h_d}{w_d} + \frac{1}{\omega_s} \frac{1}{w_s \sigma \delta} \frac{\sinh 2\frac{h_s}{\delta} - \sin 2\frac{h_s}{\delta}}{\cosh 2\frac{h_s}{\delta} - \cos 2\frac{h_s}{\delta}} \end{aligned}$$

Multiple Cages

The purpose of a “deep” slot is to improve starting performance of a motor. When the rotor is stationary, the frequency seen by rotor conductors is relatively high, and current crowding due to the skin effect makes rotor resistance appear to be high. As the rotor accelerates the frequency seen from the rotor drops, lessening the skin effect and making more use of the rotor conductor. This, then, gives the machine higher starting torque (requiring high resistance) without compromising running efficiency.

This effect can be carried even further by making use of multiple cages, such as is shown in Figure 6. Here there are two conductors in a fairly complex slot. Estimating the impedance of this slot is done in stages to build up an equivalent circuit.

Assume for the purposes of this derivation that each section of the multiple cage is small enough that currents can be considered to be uniform in each conductor. Then the bottom section may be represented as a resistance in series with an inductance:

$$R_a = \frac{1}{\sigma w_1 h_1}$$

$$L_a = \frac{\mu_0}{3} \frac{h_1}{w_1}$$

The narrow slot section with no conductor between the top and bottom conductors will contribute an inductive impedance:

$$L_s = \mu_0 \frac{h_s}{w_s}$$

The top conductor will have a resistance:

$$R_b = \frac{1}{\sigma w_2 h_2}$$

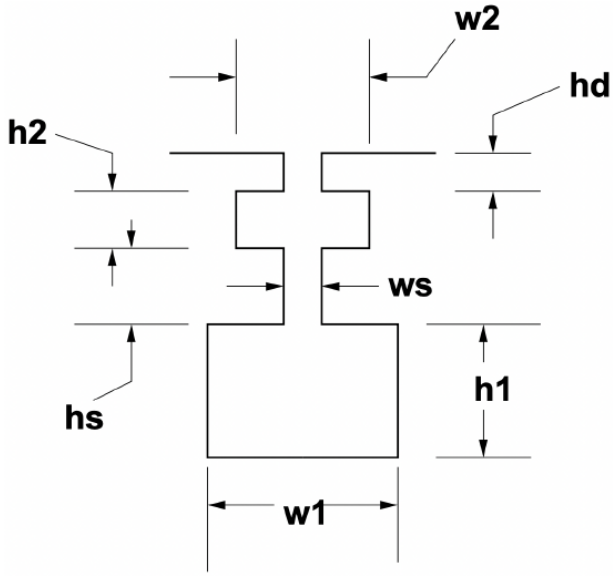

Figure 6: Double Slot

Now, in the equivalent circuit, current flowing in the lower conductor will produce a magnetic field across this section, yielding a series inductance of

$$L_b = \mu_0 \frac{h_2}{w_2}$$

By analogy with the bottom conductor, current in the top conductor flows through only one third of the inductance of the top section, leading to the equivalent circuit of Figure 7, once the inductance of the slot depression is added on:

$$L_t = \mu_0 \frac{h_d}{w_d}$$

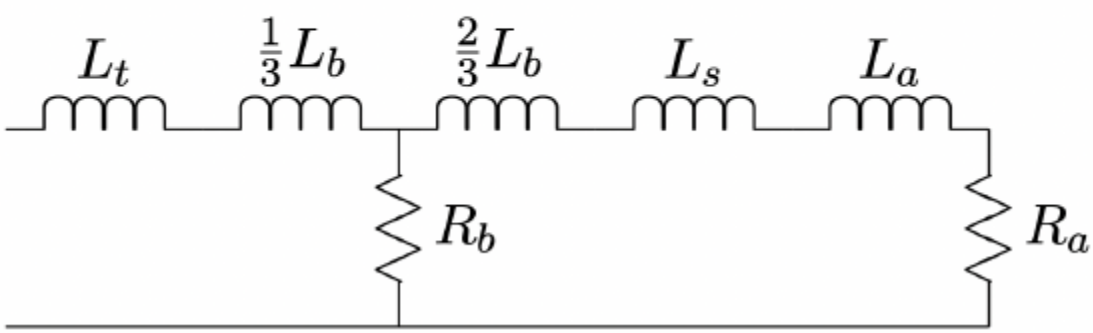

Figure 7: Equivalent Circuit: Double Bar

Now, this rotor bar circuit fits right into the framework of the induction motor equivalent circuit, shown for the double cage case in Figure 8, with

$$R_{2a} = \frac{12lN_S^2k_S^2}{N_R}R_a$$
$$R_{2b} = \frac{12lN_S^2k_S^2}{N_R}R_b$$

$$X_{2a} = \omega \frac{12 l N_S^2 k_S^2}{N_R} \left(\frac{2}{3} L_b + L_s + L_a \right)$$
$$X_{2a} = \omega \frac{12 l N_S^2 k_S^2}{N_R} \left(L_t + \frac{1}{3} L_b \right)$$

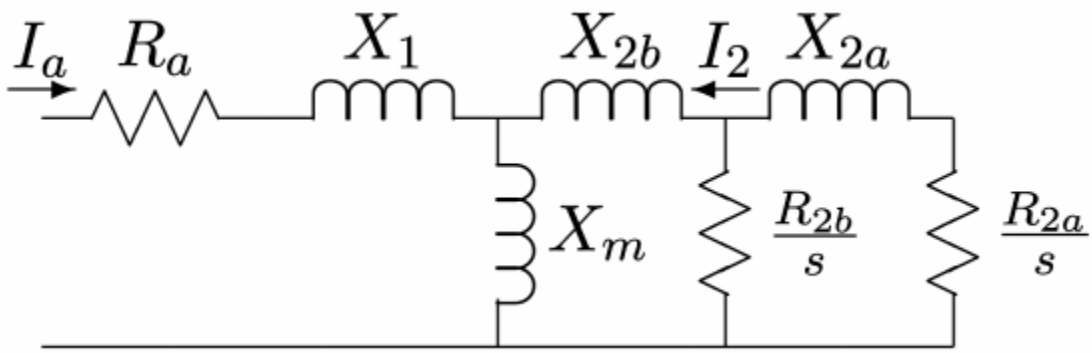

Figure 8: Equivalent Circuit: Double Cage Rotor

Rotor End Ring Effects

It is necessary to correct for “end ring” resistance in the rotor. To do this, we note that the magnitude of surface current density in the rotor is related to the magnitude of individual bar current by:

$$I_z = K_z \frac{2\pi R}{N_R}$$

Current in the end ring is:

$$I_R = K_z \frac{R}{p}$$

Then it is straightforward to calculate the ratio between power dissipated in the end rings to power dissipated in the conductor bars themselves, considering the ratio of current densities and volumes. Assuming that the bars and end rings have the same radial extent, the ratio of current densities is:

$$\frac{J_R}{J_z} = \frac{N_R}{2\pi p} \frac{w_r}{l_r}$$

where w_r is the average width of a conductor bar and l_r is the axial end ring length.

Now, the ratio of losses (and hence the ratio of resistances) is found by multiplying the square of current density ratio by the ratio of volumes. This is approximately:

$$\frac{R_{\text{end}}}{R_{\text{slot}}} = \left(\frac{N_R}{2\pi p} \frac{w_r}{l_r} \right)^2 2 \frac{2\pi R}{N_R l} \frac{l_r}{w_r} = \frac{N_R R w_r}{\pi l l_r p^2} \tag{10.3.21}$$

Windage

Bearing friction, windage loss and fan input power are often regarded as elements of a “black art”. We approach them with some level of trepidation, for motor manufacturers seem to take a highly empirical view of these elements. What follows is an attempt to build reasonable but simple models for two effects: loss in the air gap due to windage and input power to the fan for cooling. Some caution is required here, for these elements of calculation have not been properly tested, although they seem to give reasonable numbers

The first element is gap windage loss. This is produced by shearing of the air in the relative rotation gap. It is likely to be a signifigant element only in machines with very narrow air gaps or very high surface speeds. But these include, of course, the high performance machines with which we are most interested. We approach this with a simple “couette flow” model. Air-gap shear loss is approximately:

$$P_w = 2\pi R^4 \Omega^3 l \rho_a f \tag{10.3.22}$$

where ρ_a is the density of the air-gap medium (possibly air) and f is the friction factor, estimated by:

$$f = \frac{.0076}{R_n^{\frac{1}{4}}} \tag{10.3.23}$$

and the Reynold's Number R_n is

$$R_n = \frac{\Omega R g}{\nu_{\text{air}}} \tag{10.3.24}$$

and ν_{air} is the kinematic viscosity of the air-gap medium.

The second element is fan input power. We base an estimate of this on two hypotheses. The first of these is that the mass flow of air circulated by the fan can be calculated by the loss in the motor and an average temperature rise in the cooling air. The second hypothesis is the the pressure rise of the fan is established by the centrifugal pressure rise associated with the surface speed at the outside of the rotor. Taking these one at a time: If there is to be a temperature rise ΔT in the cooling air, then the mass flow volume is:

$$\dot{m} = \frac{P_d}{C_p \Delta T}$$

and then volume flow is just

$$\dot{v} = \frac{\dot{m}}{\rho_{\text{air}}}$$

Pressure rise is estimated by centrifugal force:

$$\Delta P = \rho_{\text{air}} \left(\frac{\omega}{p} r_{\text{fan}}\right)^2$$

then power is given by:

$$P_{\text{fan}} = \Delta P \dot{v}$$

For reference, the properties of air are:

Density	ρ_{air}	1.18	kg/m^2
Kinematic Viscosity	\nu_{\text {air }}	1.56×10^{-5}	m^2/sec
Heat Capacity	C_p	1005.7	J/kg

Magnetic Circuit Loss and Excitation

There will be some loss in the stator magnetic circuit due to eddy current and hysteresis effects in the core iron. In addition, particularly if the rotor and stator teeth are saturated there will be MMF expended to push flux through those regions. These effects are very difficult to estimate from first principles, so we resort to a simple model.

Assume that the loss in saturated steel follows a law such as:

$$P_d = P_B \left(\frac{\omega_e}{\omega_B}\right)^{\epsilon_f} \left(\frac{B}{B_B}\right)^{\epsilon_b} \tag{10.3.25}$$

This is not too bad an estimate for the behavior of core iron. Typically, ϵ_f is a bit less than two (between about 1.3 and 1.6) and ϵ_b is a bit more than two (between about 2.1 and 2.4). Of course this model is good only for a fairly restricted range of flux density. Base dissipation is usually expressed in "watts per kilogram", so we first compute flux density and then mass of the two principal components of the stator iron, the teeth and the back iron.

In a similar way we can model the exciting volt-amperes consumed by core iron by something like:

$$Q_c = \left(Va_1 \left(\frac{B}{B_B}\right)^{\epsilon_{v1}} + Va_2 \left(\frac{B}{B_B}\right)^{\epsilon_{v2}}\right) \frac{\omega}{\omega_B} \tag{10.3.26}$$

This, too, is a form that appears to be valid for some steels. Quite obviously it may be necessary to develop different forms of curve 'fits' for different materials.

Flux density (RMS) in the air-gap is:

$$B_r = \frac{pV_a}{2RlN_a k_1 \omega_s} \tag{10.3.27}$$

Then flux density in the stator teeth is:

$$B_t = B_r \frac{w_t + w_1}{w_t} \tag{10.3.28}$$

where w_t is tooth width and w_1 is slot top width. Flux in the back-iron of the core is

$$B_c = B_r \frac{R}{pd_c} \tag{10.3.29}$$

where d_c is the radial depth of the core.

One way of handling this loss is to assume that the core handles flux corresponding to terminal voltage, add up the losses and then compute an equivalent resistance and reactance:

$$r_c = \frac{3|V_a|^2}{P_{\text{core}}}$$
$$x_c = \frac{3|V_a|^2}{Q_{\text{core}}}$$

then put this equivalent resistance in parallel with the air-gap reactance element in the equivalent circuit.

This page titled 10.3: Squirrel Cage Machine Model is shared under a CC BY-NC-SA 4.0 license and was authored, remixed, and/or curated by James Kirtley (MIT OpenCourseWare) via source content that was edited to the style and standards of the LibreTexts platform.

10.4: Solid Iron Rotor Bodies

Solid steel rotor electric machines (SSRM) can be made to operate with very high surface speeds and are thus suitable for use in high RPM situations. They resemble, in form and function, hysteresis machines. However, asynchronous operation will produce higher power output because it takes advantage of higher flux density. We consider here the interactions to be expected from solid iron rotor bodies. The equivalent circuits can be placed in parallel (harmonic-by-harmonic) with the equivalent circuits for the squirrel cage, if there is also a cage in the machine.

To estimate the rotor parameters R_{2s} and X_{2s}, we assume that important field quantities in the machine are sinusoidally distributed in time and space, so that radial flux density is:

$$B_r = \mathrm{Re}\left(\underline{B}_r e^{j(\omega t - p\phi)}\right) \tag{10.4.1}$$

and, similarly, axially directed rotor surface current is:

$$K_z = \mathrm{Re}\left(\underline{K}_z e^{j(\omega t - p\phi)}\right) \tag{10.4.2}$$

Now, since by Faraday's law:

$$\nabla \times \bar{E} = -\frac{\partial \bar{B}}{\partial t} \tag{10.4.3}$$

we have, in this machine geometry:

$$\frac{1}{R}\frac{\partial}{\partial \phi} E_z = -\frac{\partial B_r}{\partial t} \tag{10.4.4}$$

The transformation between rotor and stator coordinates is:

$$\phi' = \phi - \omega_m t \tag{10.4.5}$$

where ω_m is rotor speed. Then:

$$p\omega_m = \omega - \omega_r = \omega(1-s) \tag{10.4.6}$$

and

Now, axial electric field is, in the frame of the rotor, just:

$$E_z = \mathrm{Re}\left(\underline{E}_z e^{j(\omega t - p\phi)}\right) \tag{10.4.7}$$

$$= \mathrm{Re}\left(\underline{E}_z e^{j(\omega_r t - p\phi')}\right) \tag{10.4.8}$$

and

$$\underline{E}_z = \frac{\omega_r R}{p}\underline{B}_r \tag{10.4.9}$$

Of course electric field in the rotor frame is related to rotor surface current by:

$$\underline{E}_z = \underline{Z}_s \underline{K}_z \tag{10.4.10}$$

Now these quantities can be related to the stator by noting that air-gap voltage is related to radial flux density by:

$$\underline{B}_r = \frac{p}{2lN_a k_1 R\omega}\underline{V}_{ag} \tag{10.4.11}$$

The stator-equivalent rotor current is:

$$\underline{I}_2 = \frac{\pi}{3}\frac{R}{N_a k_a}\underline{K}_z \tag{10.4.12}$$

Then we can find stator referred, rotor equivalent impedance to be:

$$\underline{Z}_2 = \frac{\underline{V}_{ag}}{\underline{I}_2} = \frac{3}{2}\frac{4}{\pi}\frac{l}{R}N_a^2 k_a^2 \frac{\omega}{\omega_r}\frac{\underline{E}_z}{\underline{K}_z} \tag{10.4.13}$$

Now, if rotor surface impedance can be expressed as:

$$\underline{Z}_s = R_s + j\omega_r L_s \tag{10.4.14}$$

then

$$\underline{Z}_2 = \frac{R_2}{s} + jX_2 \tag{10.4.15}$$

where

$$R_2 = \frac{3}{2}\frac{4}{\pi}\frac{l}{R}N_a^2 k_1^2 R_s \tag{10.4.16}$$

$$X_2 = \frac{3}{2}\frac{4}{\pi}\frac{l}{R}N_a^2 k_1^2 X_s \tag{10.4.17}$$

Now, to find the rotor surface impedance, we make use of a nonlinear eddy-current model proposed by Agarwal. First we define an equivalent penetration depth (similar to a skin depth):

$$\delta = \sqrt{\frac{2H_m}{\omega_r \sigma B_0}} \tag{10.4.18}$$

where σ is rotor surface material volume conductivity, B_0, "saturation flux density" is taken to be 75 % of actual saturation flux density and

$$H_m = \left|\underline{K}_z\right| = \frac{3}{\pi}\frac{N_a k_a}{R}\left|\underline{I}_2\right| \tag{10.4.19}$$

Then rotor surface resistivity and surface reactance are:

$$R_s = \frac{16}{3\pi}\frac{1}{\sigma\delta} \tag{10.4.20}$$

$$X_s = .5R_s \tag{10.4.21}$$

Note that the rotor elements X_2 and R_2 depend on rotor current I_2, so the problem is nonlinear. We find, however, that a simple iterative solution can be used. First we make a guess for R_2 and find currents. Then we use those currents to calculate R_2 and solve again for current. This procedure is repeated until convergence, and the problem seems to converge within just a few steps.

Aside from the necessity to iterate to find rotor elements, standard network techniques can be used to find currents, power input to the motor and power output from the motor, torque, etc.

Solution

Not all of the equivalent circuit elements are known as we start the solution. To start, we assume a value for R_2, possibly some fraction of X_m, but the value chosen doesn not seem to matter much. The rotor reactance X_2 is just a fraction of R_2. Then, we proceed to compute an "air-gap" impedance, just the impedance looking into the parallel combination of magnetizing and rotor branches:

$$Z_g = jX_m \| \left(jX_2 + \frac{R_2}{s}\right) \tag{10.4.22}$$

(Note that, for a generator, slip s is negative).

A total impedance is then

$$Z_t = jX_1 + R_1 + Z_g \tag{10.4.23}$$

and terminal current is

$$I_t = \frac{V_t}{Z_t} \tag{10.4.24}$$

Rotor current is just:

$$I_2 = I_t \frac{jX_m}{jX_2 + \frac{R_2}{s}} \tag{10.4.25}$$

Now it is necessary to iteratively correct rotor impedance. This is done by estimating flux density at the surface of the rotor using (145), then getting a rotor surface impedance using (146) and using that and (143 to estimate a new value for R_2. Then we start again with (148). The process "drops through" this point when the new and old estimates for R_2 agree to some criterion.

Harmonic Losses in Solid Steel

If the rotor of the machine is constructed of solid steel, there will be eddy currents induced on the rotor surface by the higher-order space harmonics of stator current. These will produce magnetic fields and losses. This calculation assumes the rotor surface is linear and smooth and can be characterized by a conductivity and relative permeability. In this discussion we include two space harmonics (positive and negative going). In practice it may be necessary to carry four (or even more) harmonics, including both 'belt' and 'zigzag' order harmonics.

Terminal current produces magnetic field in the air-gap for each of the space harmonic orders, and each of these magnetic fields induces rotor currents of the same harmonic order.

The "magnetizing" reactances for the two harmonic orders, really the two components of the zigzag leakage, are:

$$X_{zp} = X_m \frac{k_p^2}{N_p^2 k_1^2} \tag{10.4.26}$$

$$X_{zn} = X_m \frac{k_n^2}{N_n^2 k_1^2} \tag{10.4.27}$$

where N_p and N_n are the positive and negative going harmonic orders: For 'belt' harmonics these orders are 7 and 5. For 'zigzag' they are:

$$N_p = \frac{N_s + p}{p} \tag{10.4.28}$$

$$N_n = \frac{N_s - p}{p} \tag{10.4.29}$$

Now, there will be a current on the surface of the rotor at each harmonic order, and following 67, the equivalent rotor element current is:

$$\underline{I}_{2p} = \frac{\pi}{3} \frac{R}{N_a k_p} \underline{K}_p \tag{10.4.30}$$

$$\underline{I}_{2n} = \frac{\pi}{3} \frac{R}{N_a k_n} \underline{K}_n \tag{10.4.31}$$

These currents flow in response to the magnetic field in the air-gap which in turn produces an axial electric field. Viewed from the rotor this electric field is:

$$\underline{E}_p = s_p \omega R \underline{B}_p \tag{10.4.32}$$

$$\underline{E}_n = s_n \omega R \underline{B}_n \tag{10.4.33}$$

where the slip for each of the harmonic orders is:

$$s_p = 1 - N_p(1-s) \tag{10.4.34}$$

$$s_n = 1 + N_p(1-s) \tag{10.4.35}$$

and then the surface currents that flow in the surface of the rotor are:

$$\underline{K}_p = \frac{E_p}{Z_{sp}} \tag{10.4.36}$$

$$\underline{K}_n = \frac{\underline{E}_n}{Z_{sn}} \tag{10.4.37}$$

where Z_{sp} and Z_{sn} are the surface impedances at positive and negative harmonic slip frequencies, respectively. Assuming a linear surface, these are, approximately:

$$Z_s = \frac{1+j}{\sigma\delta} \tag{10.4.38}$$

where σ is material restivity and the skin depth is

$$\delta = \sqrt{\frac{2}{\omega_s \mu \sigma}} \tag{10.4.39}$$

and ω_s is the frequency of the given harmonic from the rotor surface. We can postulate that the appropriate value of μ to use is the same as that estimated in the nonlinear calculation of the space fundamental, but this requires empirical confirmation.

The voltage induced in the stator by each of these space harmonic magnetic fluxes is:

$$V_p = \frac{2N_a k_p l R \omega}{N_p p} \underline{B}_p \tag{10.4.40}$$

$$V_n = \frac{2N_a k_n l R \omega}{N_n p} \underline{B}_n \tag{10.4.41}$$

Then the equivalent circuit impedance of the rotor is just:

$$Z_{2p} = \frac{V_p}{I_p} = \frac{3}{2}\frac{4}{\pi}\frac{N_a^2 k_p^2 l}{N_p R}\frac{Z_{sp}}{s_p} \tag{10.4.42}$$

$$Z_{2n} = \frac{V_n}{I_n} = \frac{3}{2}\frac{4}{\pi}\frac{N_a^2 k_n^2 l}{N_n R}\frac{Z_{sn}}{s_n} \tag{10.4.43}$$

The equivalent rotor circuit elements are now:

$$R_{2p} = \frac{3}{2}\frac{4}{\pi}\frac{N_a^2 k_p^2 l}{N_p R}\frac{1}{\sigma\delta_p} \tag{10.4.44}$$

$$R_{2n} = \frac{3}{2}\frac{4}{\pi}\frac{N_a^2 k_n^2 l}{N_n R}\frac{1}{\sigma\delta_n} \tag{10.4.45}$$

$$X_{2p} = \frac{1}{2}R_{2p} \tag{10.4.46}$$

$$X_{2n} = \frac{1}{2}R_{2n} \tag{10.4.47}$$

Stray Losses

So far in this document, we have outlined the major elements of torque production and consequently of machine performance.

We have also discussed, in some cases, briefly, the major sources of loss in induction machines. Using what has been outlined in this document will give a reasonable impression of how an induction machine works. We have also discussed some of the stray load losses: those which can be (relatively) easily accounted for in an equivalent circuit description of the machine. But there are other losses which will occur and which are harder to estimate. We do not claim to do a particularly accurate job of estimating these losses, and fortunately they do not normally turn out to be very large. To be accounted for here are:

1. No-load losses in rotor teeth because of stator slot opening modulation of fundamental flux density,
2. Load losses in the rotor teeth because of stator zigzag mmf, and
3. No-load losses in the solid rotor body (if it exists) due to stator slot opening modulation of fundamental flux density.

Note that these losses have a somewhat different character from the other miscellaneous losses we compute. They show up as drag on the rotor, so we subtract their power from the mechanical output of the machine. The first and third of these are, of course, very closely related so we take them first.

The stator slot openings 'modulate' the space fundamental magnetic flux density. We may estimate a slot opening angle (relative to the slot pitch):

$$\theta_D = \frac{2\pi w_d N_s}{2\pi r} = \frac{w_d N_s}{r}$$

Then the amplitude of the magnetic field disturbance is:

$$B_H = B_{r1}\frac{2}{\pi}\sin\frac{\theta_D}{2}$$

In fact, this flux disturbance is really in the form of two traveling waves, one going forward and one backward with respect to the stator at a velocity of ω/N_s. Since operating slip is relatively small, the two variations will have just about the same frequency as viewed from the rotor, so it seems reasonable to lump them together. The frequency is:

$$\omega_H = \omega\frac{N_s}{p}$$

Now, for laminated rotors this magnetic field modulation will affect the tips of rotor teeth. We assume (perhaps arbitrarily) that the loss due to this magnetic field modulation can be estimated from ordinary steel data (as we estimated core loss above) and that only the rotor teeth, not any of the rotor body, are affected. The method to be used is straightforward and follows almost exactly what was done for core loss, with modification only of the frequency and field amplitude.

For solid steel rotors the story is only a little different. The magnetic field will produce an axial electric field:

$$\underline{E}_z = R\frac{\omega}{p}B_H$$

and that, in turn, will drive a surface current

$$\underline{K}_z = \frac{\underline{E}_z}{\underline{Z}_s}$$

Now, what is important is the magnitude of the surface current, and since $\left|\underline{Z}_s\right| = \sqrt{1+.5^2}R_s \approx 1.118R_s$, we can simply use rotor resistance. The nonlinear surface penetration depth is:

$$\delta = \sqrt{\frac{2B_0}{\omega_H\sigma\left|\underline{K}_z\right|}}$$

A brief iterative substitution, re-calculating δ and then $\left|\underline{K}_z\right|$ quickly yields consistent values for δ and R_s. Then the full-voltage dissipation is:

$$P_{rs} = 2\pi Rl\frac{\left|\underline{K}_z\right|^2}{\sigma\delta}$$

and an equivalent resistance is:

$$R_{rs} = \frac{3\left|V_a\right|^2}{P_{rs}}$$

Finally, the zigzag order current harmonics in the stator will produce magnetic fields in the air gap which will drive magnetic losses in the teeth of the rotor. Note that this is a bit different from the modulation of the space fundamental produced by the

stator slot openings (although the harmonic order will be the same, the spatial orientation will be different and will vary with load current). The magnetic flux in the air-gap is most easily related to the equivalent circuit voltage on the nth harmonic:

$$B_n = \frac{npv_n}{2lRN_a k_n \mathrm{omega}}$$

This magnetic field variation will be substantial only for the zigzag order harmonics: the belt harmonics will be essentially shorted out by the rotor cage and those losses calculated within the equivalent circuit. The frequency seen by the rotor is that of the space harmonics, already calculated, and the loss can be estimated in the same way as core loss, although as we have pointed out it appears as a 'drag' on the rotor.

This page titled 10.4: Solid Iron Rotor Bodies is shared under a CC BY-NC-SA 4.0 license and was authored, remixed, and/or curated by James Kirtley (MIT OpenCourseWare) via source content that was edited to the style and standards of the LibreTexts platform.

10.5: Induction Motor Speed Control

Introduction

The inherent attributes of induction machines make them very attractive for drive applications. They are rugged, economical to build and have no sliding contacts to wear. The difficulty with using induction machines in servomechanisms and variable speed drives is that they are “hard to control”, since their torque-speed relationship is complex and nonlinear. With, however, modern power electronics to serve as frequency changers and digital electronics to do the required arithmetic, induction machines are seeing increasing use in drive applications.

In this chapter we develop models for control of induction motors. The derivation is quite brief for it relies on what we have already done for synchronous machines. In this chapter, however, we will stay in “ordinary” variables, skipping the per-unit normalization.

Volts/Hz Control

Remembering that induction machines generally tend to operate at relatively low per unit slip, we might conclude that one way of building an adjustable speed drive would be to supply an induction motor with adjustable stator frequency. And this is, indeed, possible. One thing to remember is that flux is inversely proportional to frequency, so that to maintain constant flux one must make stator voltage proportional to frequency (hence the name “constant volts/Hz”). However, voltage supplies are always limited, so that at some frequency it is necessary to switch to constant voltage control. The analogy to DC machines is fairly direct here: below some “base” speed, the machine is controlled in constant flux (“volts/Hz”) mode, while above the base speed, flux is inversely proportional to speed. It is easy to see that the maximum torque is then inversely to the square of flux, or therefore to the square of frequency.

To get a first-order picture of how an induction machine works at adjustable speed, start with the simplified equivalent network that describes the machine, as shown in Figure 9

Earlier in this chapter, it was shown that torque can be calculated by finding the power dissipated in the virtual resistance R_2/s and dividing by electrical speed. For a three phase machine, and assuming we are dealing with RMS magnitudes:

$$T_e = 3\frac{p}{\omega}|I_2|^2\,\frac{R_2}{s}$$

where ω is the electrical frequency and p is the number of pole pairs. It is straightforward to find I_2 using network techniques. As an example, Figure 10 shows a series of torque/speed curves for

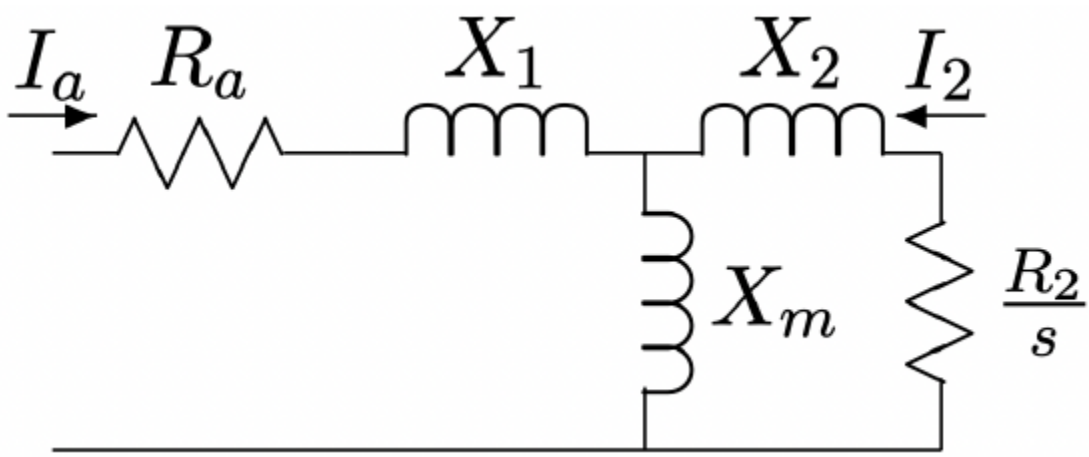

Figure 9: Equivalent Circuit

an induction machine operated with a wide range of input frequencies, both below and above its “base” frequency. The parameters of this machine are:

Number of Phases	3
Number of Pole Pairs	3
RMS Terminal Voltage (line-line)	230
Frequency (Hz)	60
Stator Resistance R_1	.06 Ω
Rotor Resistance R_2	.055 Ω
Stator Leakage X_1	.34 Ω
Rotor Leakage X_2	.33 Ω
Magnetizing Reactance X_m	10.6 Ω

Strategy for operating the machine is to make terminal voltage magnitude proportional to frequency for input frequencies less than the “Base Frequency”, in this case 60 Hz, and to hold voltage constant for frequencies above the “Base Frequency”.

For high frequencies the torque production falls fairly rapidly with frequency (as it turns out, it is roughly proportional to the inverse of the square of frequency). It also falls with very low frequency because of the effects of terminal resistance. We will look at this next.

Idealized Model: No Stator Resistance

Ignore, for the moment, R_1. An equivalent circuit is shown in Figure 11. It is fairly easy to show that, from the rotor, the combination of source, armature leakage and magnetizing branch can be replaced by its equivalent circuit, as shown in in Figure 12.

In the circuit of Figure 12, the parameters are:

$$V' = V\frac{X_m}{X_m + X_1}$$
$$X' = X_m \| X_1$$

If the machine is operated at variable frequency ω, but the reactance is established at frequency ω_B, current is:

$$\underline{I} = \frac{V'}{j(X_1' + X_2)\frac{\omega}{\omega_B} + \frac{R_2}{s}}$$

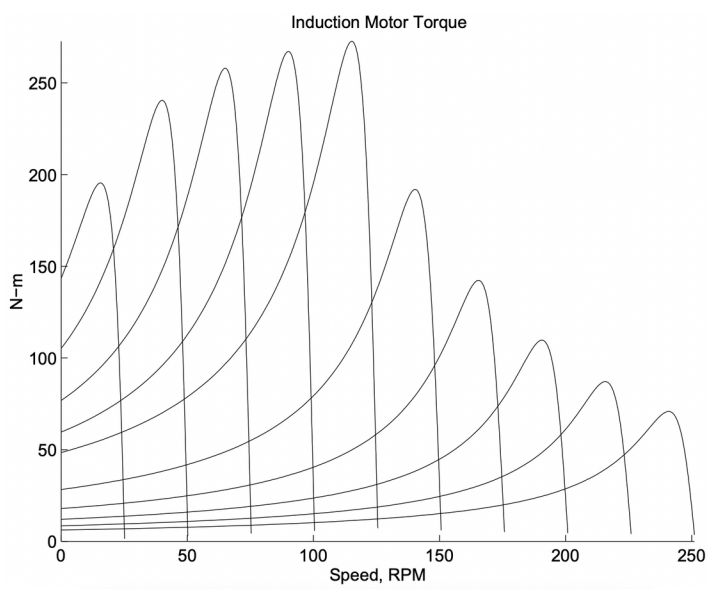

Figure 10: Induction Machine Torque-Speed Curves

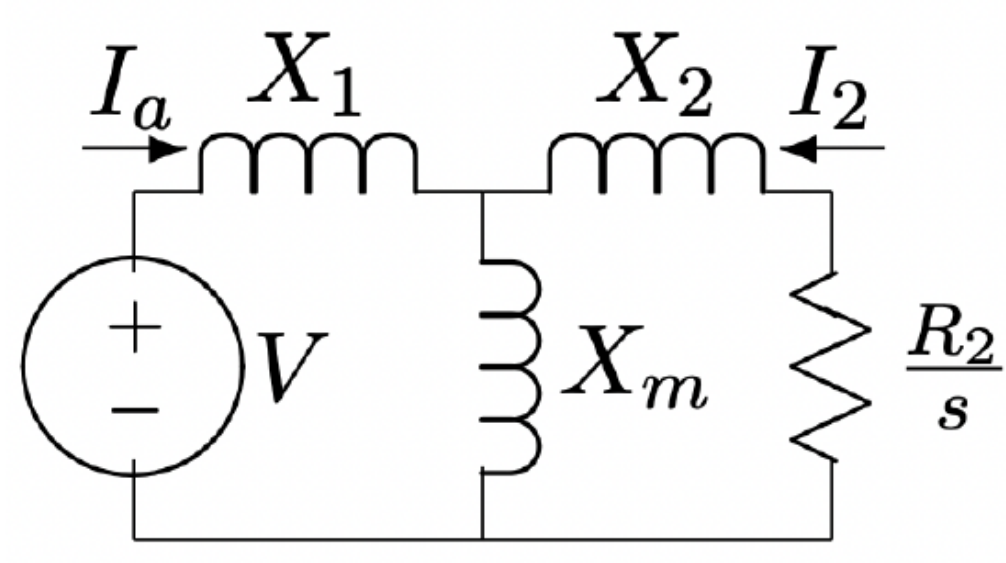

Figure 11: Idealized Circuit: Ignore Armature Resistance

and then torque is

$$T_e = 3\left|I_2\right|^2 \frac{R_2}{s} = \frac{3p}{\omega} \frac{|V'|^2 \frac{R_2}{s}}{(X_1'+X_2)^2+\left(\frac{R_2}{s}\right)^2}$$

Now, if we note that what counts is the absolute slip of the rotor, we might define a slip with respect to base frequency:

$$s = \frac{\omega_r}{\omega} = \frac{\omega_r}{\omega_B}\frac{\omega_B}{\omega} = s_B\frac{\omega_B}{\omega}$$

Then, if we assume that voltage is applied proportional to frequency:

$$V' = V_0'\frac{\omega}{\omega_B}$$

and with a little manipulation, we get:

$$T_e = \frac{3p}{\omega_B} \frac{|V_0'|^2 \frac{R_2}{s_B}}{(X_1'+X_2)^2+\left(\frac{R_2}{s_B}\right)^2}$$

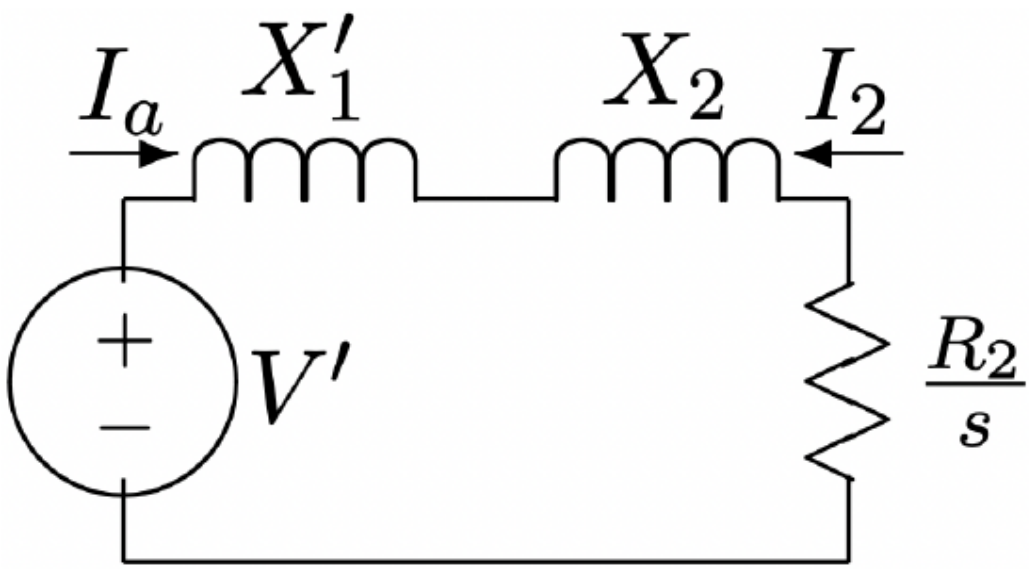

Figure 12: Idealized Equivalent

This would imply that torque is, if voltage is proportional to frequency, meaning constant applied flux, dependent only on absolute slip. The torque-speed curve is a constant, dependent only on the difference between synchronous and actual rotor speed.

This is fine, but eventually, the notion of “volts per Hz” runs out because at some number of Hz, there are no more volts to be had. This is generally taken to be the “base” speed for the drive. Above that speed, voltage is held constant, and torque is given by:

$$T_e = \frac{3p}{\omega_B} \frac{|V'|^2 \frac{R_2}{s_B}}{(X_1'+X_2)^2 + \left(\frac{R_2}{s_B}\right)^2}$$

The peak of this torque has a square-inverse dependence on frequency, as can be seen from Figure 13.

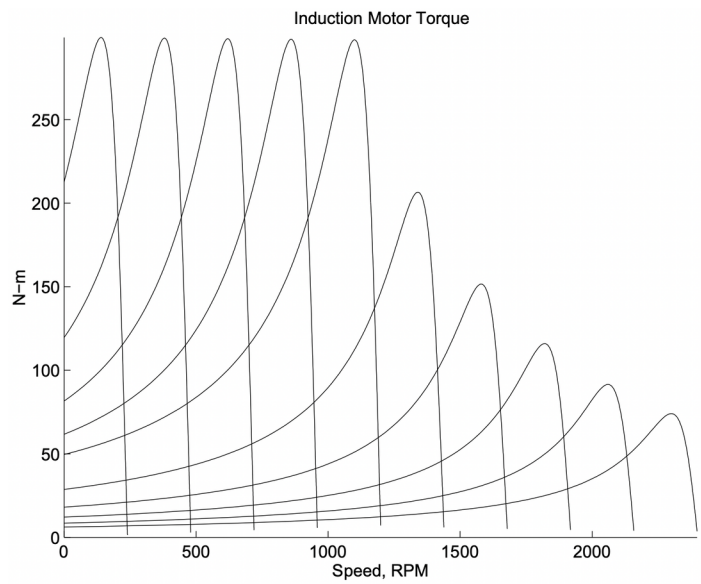

Figure 13: Idealized Torque-Speed Curves: Zero Stator Resistance

Peak Torque Capability

Assuming we have a smart controller, we are interested in the actual capability of the machine. At some voltage and frequency, torque is given by:

$$T_e = 3\left|I_2\right|^2 \frac{R_2}{s} = \frac{3\frac{p}{\omega}|V'|^2 \frac{R_2}{s}}{\left((X_1'+X_2)\left(\frac{\omega}{\omega_B}\right)\right)^2 + \left(R_1' + \frac{R_2}{s}\right)^2}$$

Now, we are interested in finding the peak value of that, which is given by the value of $R_2 s$ which maximizes power transfer to the virtual resistance. This is given by the matching condition:

$$\frac{R_2}{s} = \sqrt{R_1'^2 + \left((X_1' + X_2)\left(\frac{\omega}{\omega_B}\right)\right)^2}$$

Then maximum (breakdown) torque is given by:

$$T_{\max} = \frac{\frac{3p}{\omega}|V'|^2 \sqrt{R_1'^2 + \left((X_1'+X_2)\left(\frac{\omega}{\omega_B}\right)\right)^2}}{\left((X_1'+X_2)\left(\frac{\omega}{\omega_B}\right)\right)^2 + \left(R_1' + \sqrt{R_1'^2 + \left((X_1'+X_2)\left(\frac{\omega}{\omega_B}\right)\right)^2}\right)^2}$$

This is plotted in Figure 14. Just as a check, this was calculated assuming $R_1 = 0$, and the results are plotted in figure 15. This plot shows, as one would expect, a constant torque limit region to zero speed.

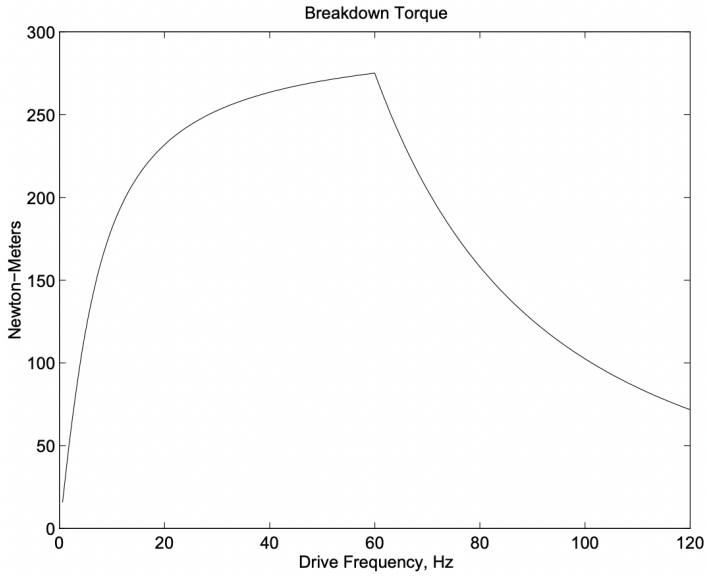

Figure 14: Torque-Capability Curve For An Induction Motor

Field Oriented Control

One of the more useful impacts of modern power electronics and control technology has enabled us to turn induction machines into high performance servomotors. In this note we will develop a

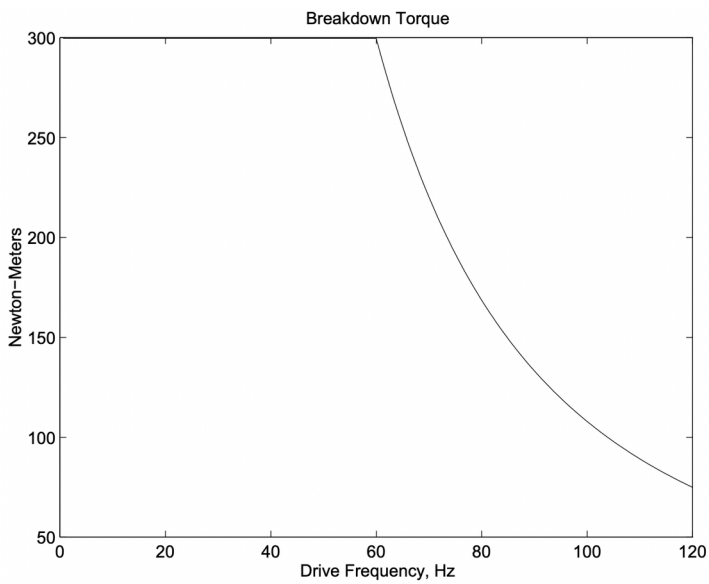

Figure 15: Idealized Torque Capability Curve: Zero Stator Resistance

picture of how this is done. Quite obviously there are many details which we will not touch here. The objective is to emulate the performance of a DC machine, in which (as you will recall), torque is a simple function of applied current. For a machine with one field winding, this is simply:

$$T = GI_f I_a$$

This makes control of such a machine quite easy, for once the desired torque is known it is easy to translate that torque command into a current and the motor does the rest.

Of course DC (commutator) machines are, at least in large sizes, expensive, not particularly efficient, have relatively high maintenance requirements because of the sliding brush/commutator interface, provide environmental problems because of

sparking and carbon dust and are environmentally sensitive. The induction motor is simpler and more rugged. Until fairly recently the induction motor has not been widely used in servo applications because it was thought to be ”hard to control”. As we will show, it does take a little effort and even some computation to do the controls right, but this is becoming increasingly affordable.

Elementary Model

We return to the elementary model of the induction motor. In ordinary variables, referred to the stator, the machine is described by flux-current relationships (in the d-q reference frame):

$$\begin{bmatrix} \lambda_{dS} \\ \lambda_{dR} \end{bmatrix} = \begin{bmatrix} L_S & M \\ M & L_R \end{bmatrix} \begin{bmatrix} i_{dS} \\ i_{dR} \end{bmatrix}$$
$$\begin{bmatrix} \lambda_{qS} \\ \lambda_{qR} \end{bmatrix} = \begin{bmatrix} L_S & M \\ M & L_R \end{bmatrix} \begin{bmatrix} i_{qS} \\ i_{qR} \end{bmatrix}$$

Note the machine is symmetric (there is no saliency), and since we are referred to the stator, the stator and rotor self-inductances include leakage terms:

$$L_S = M + L_{S\ell}$$
$$L_R = M + L_{R\ell}$$

The voltage equations are:

$$\begin{aligned} v_{dS} &= \frac{d\lambda_{dS}}{dt} - \omega\lambda_{qS} + r_S i_{dS} \\ v_{qS} &= \frac{d\lambda_{qS}}{dt} + \omega\lambda_{dS} + r_S i_{qS} \\ 0 &= \frac{d\lambda_{dR}}{dt} - \omega_s\lambda_{qR} + r_R i_{dR} \\ 0 &= \frac{d\lambda_{qR}}{dt} + \omega_s\lambda_{dR} + r_R i_{qR} \end{aligned}$$

Note that both rotor and stator have “speed” voltage terms since they are both rotating with respect to the rotating coordinate system. The speed of the rotating coordinate system is w with respect to the stator. With respect to the rotor that speed is , where wm is the rotor mechanical speed. Note that this analysis does not require that the reference frame coordinate system speed w be constant.

Torque is given by:

$$T^e = \tfrac{3}{2}p\left(\lambda_{dS}i_{qS} - \lambda_{qS}i_{dS}\right)$$

Simulation Model

As a first step in developing a simulation model, see that the inversion of the flux-current relationship is (we use the d- axis since the q- axis is identical):

$$\begin{aligned} i_{dS} &= \frac{L_R}{L_S L_R - M^2}\lambda_{dS} - \frac{M}{L_S L_R - M^2}\lambda_{dR} \\ i_{dR} &= \frac{M}{L_S L_R - M^2}\lambda_{dS} - \frac{L_S}{L_S L_R - M^2}\lambda_{dR} \end{aligned}$$

Now, if we make the following definitions (the motivation for this should by now be obvious):

$$\begin{aligned} X_d &= \omega_0 L_S \\ X_{kd} &= \omega_0 L_R \\ X_{ad} &= \omega_0 M \\ X_d' &= \omega_0\left(L_S - \frac{M^2}{L_R}\right) \end{aligned}$$

the currents become:

$$i_{dS} = \frac{\omega_0}{X_d'}\lambda_{dS} - \frac{X_{ad}}{X_{kd}}\frac{\omega_0}{X_d'}\lambda_{dR}$$
$$i_{dR} = \frac{X_{ad}}{X_{kd}}\frac{\omega_0}{X_d'}\lambda_{dS} - \frac{X_d}{X_d'}\frac{\omega_0}{X_{kd}}\lambda_{dR}$$

The q- axis is the same.

Torque may be, with these calculations for current, written as:

$$T_e = \frac{3}{2}p\left(\lambda_{dS}i_{qS} - \lambda_{qS}i_{dS}\right) = -\frac{3}{2}p\frac{\omega_0 X_{ad}}{X_{kd}X_d'}\left(\lambda_{dS}\lambda_{qR} - \lambda_{qS}\lambda_{dR}\right)$$

Note that the usual problems with ordinary variables hold here: the foregoing expression was written assuming the variables are expressed as peak quantities. If

RMS is used we must replace 3/2 by 3!

With these, the simulation model is quite straightforward. The state equations are:

$$\begin{aligned}
\frac{d\lambda_{dS}}{dt} &= V_{dS} + \omega\lambda_{qS} - R_S i_{dS} \\
\frac{d\lambda_{qS}}{dt} &= V_{qS} - \omega\lambda_{dS} - R_S i_{qS} \\
\frac{d\lambda_{dR}}{dt} &= \omega_s\lambda_{qR} - R_R i_{dR} \\
\frac{d\lambda_{qR}}{dt} &= -\omega_s\lambda_{dR} - R_S i_{qR} \\
\frac{d\Omega_m}{dt} &= \frac{1}{J}\left(T_e + T_m\right)
\end{aligned}$$

where the rotor frequency (slip frequency) is:

$$\omega_s = \omega - p\Omega_m$$

For simple simulations and constant excitaion frequency, the choice of coordinate systems is arbitrary, so we can choose something convenient. For example, we might choose to fix the coordinate system to a synchronously rotating frame, so that stator frequency $\omega = \omega_0$. In this case, we could pick the stator voltage to lie on one axis or another. A common choice is $V_d = 0$ and $V_q = V$.

Control Model

If we are going to turn the machine into a servomotor, we will want to be a bit more sophisticated about our coordinate system. In general, the principle of field-oriented control is much like emulating the function of a DC (commutator) machine. We figure out where the flux is, then inject current to interact most directly with the flux.

As a first step, note that because the two stator flux linkages are the sum of air-gap and leakage flux,

$$\begin{aligned}
\lambda_{dS} &= \lambda_{agd} + L_{S\ell}i_{dS} \\
\lambda_{qS} &= \lambda_{agq} + L_{S\ell}i_{qS}
\end{aligned}$$

This means that we can re-write torque as:

$$T^e = \frac{3}{2}p\left(\lambda_{agd}i_{qS} - \lambda_{agq}i_{dS}\right)$$

Next, note that the rotor flux is, similarly, related to air-gap flux:

$$\begin{aligned}
\lambda_{agd} &= \lambda_{dR} - L_{R\ell}i_{dR} \\
\lambda_{agq} &= \lambda_{qR} - L_{R\ell}i_{qR}
\end{aligned}$$

Torque now becomes:

$$T^e = \frac{3}{2}p\left(\lambda_{dR}i_{qS} - \lambda_{qR}i_{dS}\right) - \frac{3}{2}pL_{R\ell}\left(i_{dR}i_{qS} - i_{qR}i_{dS}\right)$$

Now, since the rotor currents could be written as:

$$i_{dR} = \frac{\lambda_{dR}}{L_R} - \frac{M}{L_R} i_{dS}$$
$$i_{qR} = \frac{\lambda_{qR}}{L_R} - \frac{M}{L_R} i_{qS}$$

That second term can be written as:

$$i_{dR} i_{qS} - i_{qR} i_{dS} = \frac{1}{L_R} \left(\lambda_{dR} i_{qS} - \lambda_{qR} i_{dS} \right)$$

So that torque is now:

$$T^e = \frac{3}{2} p \left(1 - \frac{L_{R\ell}}{L_R} \right) \left(\lambda_{dR} i_{qS} - \lambda_{qR} i_{dS} \right) = \frac{3}{2} p \frac{M}{L_R} \left(\lambda_{dR} i_{qS} - \lambda_{qR} i_{dS} \right)$$

Field-Oriented Strategy

What is done in field-oriented control is to establish a rotor flux in a known position (usually this position is the d- axis of the transformation) and then put a current on the orthogonal axis (where it will be most effective in producing torque). That is, we will attempt to set

$$\lambda_{dR} = \Lambda_0$$
$$\lambda_{qR} = 0$$

Then torque is produced by applying quadrature-axis current:

$$T^e = \frac{3}{2} p \frac{M}{L_R} \Lambda_0 i_{qS}$$

The process is almost that simple. There are a few details involved in figuring out where the quadrature axis is and how hard to drive the direct axis (magnetizing) current.

Now, suppose we can succeed in putting flux on the right axis, so that $\lambda_{qR} = 0$, then the two rotor voltage equations are:

$$0 = \frac{d\lambda_{dR}}{dt} - \omega_s \lambda_{qR} + r_R I_{dR}$$
$$0 = \frac{d\lambda_{qR}}{dt} + \omega_s \lambda_{dR} + r_R I_{qR}$$

Now, since the rotor currents are:

$$i_{dR} = \frac{\lambda_{dR}}{L_R} - \frac{M}{L_R} i_{dS}$$
$$i_{qR} = \frac{\lambda_{qR}}{L_R} - \frac{M}{L_R} i_{qS}$$

The voltage expressions become, accounting for the fact that there is no rotor quadrature axis flux:

$$0 = \frac{d\lambda_{dR}}{dt} + r_R \left(\frac{\lambda_{dR}}{L_R} - \frac{M}{L_R} i_{dS} \right)$$
$$0 = \omega_s \lambda_{dR} - r_R \frac{M}{L_R} i_{qS}$$

Noting that the rotor time constant is

$$T_R = \frac{L_R}{r_R}$$

we find:

$$T_R \frac{d\lambda_{dR}}{dt} + \lambda_{dR} = M i_{dS}$$
$$\omega_s = \frac{M}{T_R} \frac{i_{qS}}{\lambda_{dR}}$$

The first of these two expressions describes the behavior of the direct-axis flux: as one would think, it has a simple first-order relationship with direct-axis stator current. The second expression, which describes slip as a function of quadrature axis current and direct axis flux, actually describes how fast to turn the rotating coordinate system to hold flux on the direct axis.

Now, a real machine application involves phase currents i_a, i_b and i_c, and these must be derived from the model currents i_{dS} and i_{qs}. This is done with, of course, a mathematical operation which uses a transformation angle θ. And that angle is derived from the rotor mechanical speed and computed slip:

$$\theta = \int (p\omega_m + \omega_s)\, dt$$

A generally good strategy to make this sort of system work is to measure the three phase currents and derive the direct- and quadrature-axis currents from them. A good estimate of direct-axis flux is made by running direct-axis flux through a first-order filter. The tricky operation involves dividing quadrature axis current by direct axis flux to get slip, but this is now easily done numerically (as are the trigonometric operations required for the rotating coordinate system transformation). An elmentary block diagram of a (possbly) plausible scheme for this is shown in Figure 16.

In this picture we start with commanded values of direct- and quadrature- axis currents, corresponding to flux and torque, respectively. These are translated by a rotating coordinate transformation into commanded phase currents. That transformation (simply the inverse Park's transform) uses the angle q derived as part of the scheme. In some (cheap) implementations of this scheme the commanded currents are used rather than the measured currents to establish the flux and slip.

We have shown the commanded currents i_a^*, etc. as inputs to an "Amplifier". This might be implemented as a PWM current-source, for example, and a tight loop here results in a rather high performance servo system.

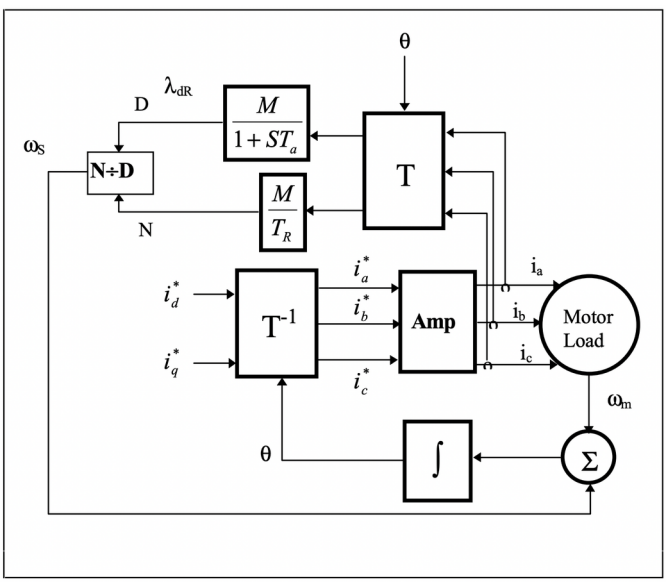

Figure 16: Field Oriented Controller

References

Equation ??? P.L. Alger, "Induction Machines", Gordon and Breach, 1969

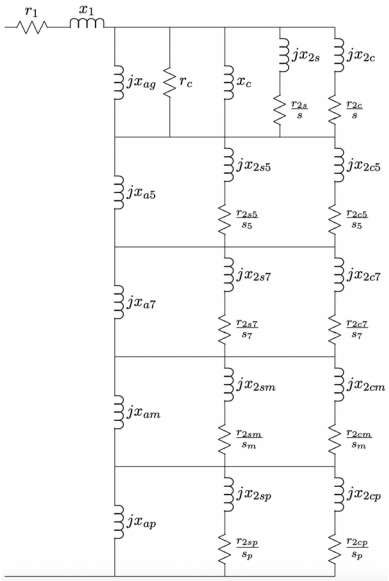

Figure 17: Extended Equivalent Circuit

This page titled 10.5: Induction Motor Speed Control is shared under a CC BY-NC-SA 4.0 license and was authored, remixed, and/or curated by James Kirtley (MIT OpenCourseWare) via source content that was edited to the style and standards of the LibreTexts platform.

11: DC (COMMUTATOR) AND PERMANENT MAGNET MACHINES

11.1: Introduction

11.2: Permanent Magnets in Electric Machines

11.3: Simple Permanent Magnet Machine Structures- Commutator Machines

This page titled 11: DC (commutator) and permanent magnet machines is shared under a CC BY-NC-SA 4.0 license and was authored, remixed, and/or curated by James Kirtley (MIT OpenCourseWare) via source content that was edited to the style and standards of the LibreTexts platform.

11.1: Introduction

Virtually all electric machines, and all practical electric machines employ some form of rotating or alternating field/current system to produce torque. While it is possible to produce a “true DC” machine (e.g. the “Faraday Disk”), for practical reasons such machines have not reached application and are not likely to. In the machines we have examined so far the machine is operated from an alternating voltage source. Indeed, this is one of the principal reasons for employing AC in power systems.

The first electric machines employed a mechanical switch, in the form of a carbon brush/commutator system, to produce this rotating field. While the widespread use of power electronics is making “brushless” motors (which are really just synchronous machines) more popular and common, commutator machines are still economically very important. They are relatively cheap, particularly in small sizes, they tend to be rugged and simple.

You will find commutator machines in a very wide range of applications. The starting motor on all automobiles is a series-connected commutator machine. Many of the other electric motors in automobiles, from the little motors that drive the outside rear-view mirrors to the motors that drive the windshield wipers are permanent magnet commutator machines. The large traction motors that drive subway trains and diesel/electric locomotives are DC commutator machines (although induction machines are making some inroads here). And many common appliances use “universal” motors: series connected commutator motors adapted to AC.

Geometry

A schematic picture (“cartoon”) of a commutator type machine is shown in 1. The armature of this machine is on the rotor (this is the part that handles the electric power), and current is fed to the armature through the brush/commutator system. The interaction magnetic field is provided

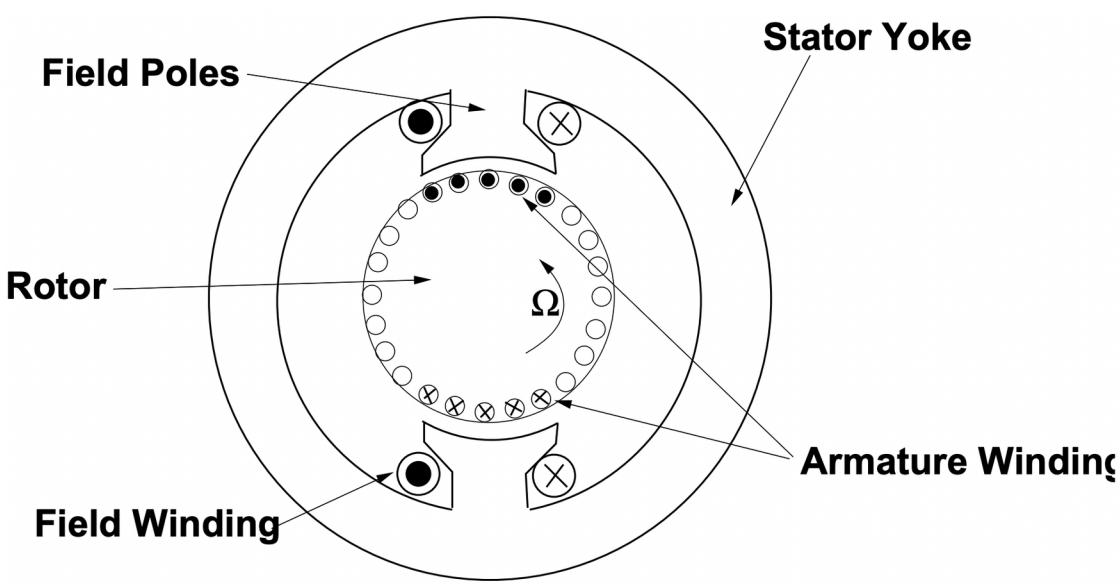

Figure 1: Wound-Field DC Machine Geometry

(in this picture) by a field winding. A permanent magnet field is applicable here, and we will have quite a lot more to say about such arrangements below.

Now, if we assume that the interaction magnetic flux density averages B_r, and if there are C_a conductors underneath the poles at any one time, and if there are m parallel paths, then we may estimate torque produced by the machine by:

$$T_e = \frac{C_a}{m} R\ell B_r I_a$$

where R and ℓ are rotor radius and length, respectively and I_a is terminal current. Note that C_a is not necessarily the total

number of conductors, but rather the total number of active conductors (that is, conductors underneath the pole and therefore subject to the interaction field). Now, if we note N_f as the number of field turns per pole, the interaction field is just:

$$B_r = \frac{N_f I_f}{g}$$

leading to a simple expression for torque in terms of the two currents:

$$T_e = G I_a I_f$$

where G is now the motor coefficient (units of N-m/ampere squared):

$$G = \mu_0 \frac{C_a}{m} \frac{N_f}{g} R\ell$$

Now, let's go back and look at this from the point of view of voltage. Start with Faraday's Law:

$$\nabla \times \vec{E} = -\frac{\partial \vec{B}}{\partial t}$$

Integrating both sides and noting that the area integral of a curl is the edge integral of the quantity, we find:

$$\oint \vec{E} \cdot d\bar{\ell} = -\iint \frac{\partial \vec{B}}{\partial t}$$

Now, that is a bit awkward to use, particularly in the case we have here in which the edge of the contour is moving (note we will be using this expression to find voltage). We can make this a bit more convenient to use if we note:

$$\frac{d}{dt} \iint \vec{B} \cdot \vec{n} da = \iint \frac{\partial \vec{B}}{\partial t} \cdot \vec{n} da + \oint \vec{v} \times \vec{B} \cdot d\vec{\ell}$$

where $\vec{v}$ is the velocity of the contour. This gives us a convenient way of noting the apparent electric field within a moving object (as in the conductors in a DC machine):

$$\vec{E}' = \vec{E} + \vec{v} \times \vec{B}$$

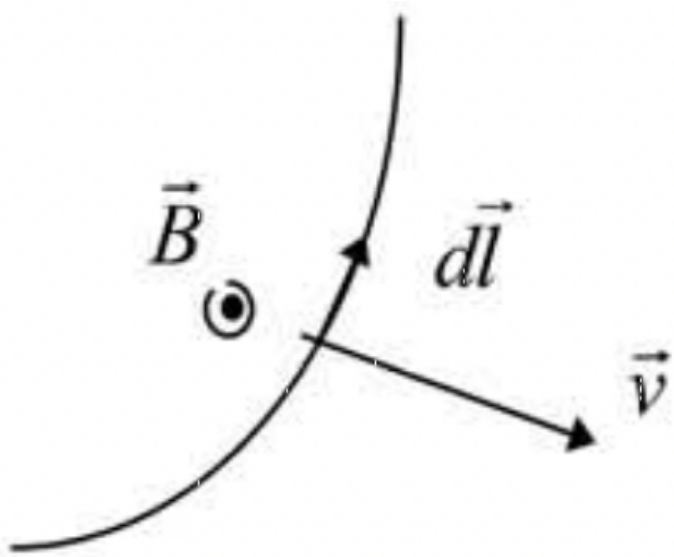

Figure 2: Motion of a contour through a magnetic field produces flux change and electric field in the moving contour

Now, note that the armature conductors are moving through the magnetic field produced by the stator (field) poles, and we can ascribe to them an axially directed electric field:

$$E_z = -R\Omega B_r$$

If the armature conductors are arranged as described above, with C_a conductors in m parallel paths underneath the poles and with a mean active radial magnetic field of B_r, we can compute a voltage induced in the stator conductors:

$$E_b = \frac{C_a}{m} R\Omega B_r$$

Note that this is only the voltage induced by motion of the armature conductors through the field and does not include brush or conductor resistance. If we include the expression for effective magnetic field, we find that the back voltage is:

$$E_b = G\Omega I_f$$

which leads us to the conclusion that newton-meters per ampere squared equals volt seconds per ampere. This stands to reason if we examine electric power into the interaction and mechanical power out:

$$P_{em} = E_b I_a = T_e \Omega$$

Now, a more complete model of this machine would include the effects of armature, brush and lead resistance, so that in steady state operation:

$$V_a = R_a I_a + G\Omega I_f$$

Now, consider this machine with its armatucre connected to a voltage source and its field operating at steady current, so that:

$$I_a = \frac{V_a - G\Omega I_f}{R_a}$$

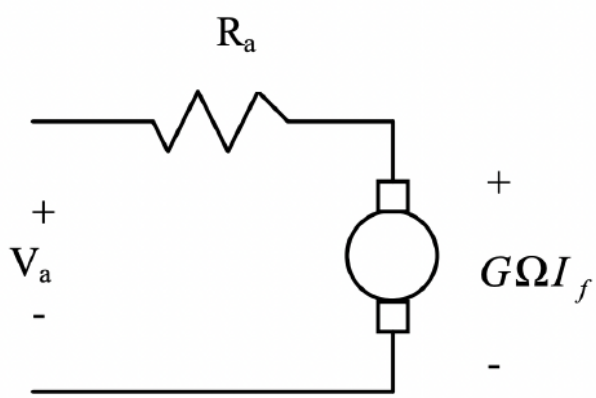

Figure 3: DC Machine Equivalent Circuit

Then torque, electric power in and mechanical power out are:

$$T_e = GI_f \frac{V_a - G\Omega I_f}{R_a}$$
$$P_e = V_a \frac{V_a - G\Omega I_f}{R_a}$$
$$P_m = G\Omega I_f \frac{V_a - G\Omega I_f}{R_a}$$

Now, note that these expressions define three regimes defined by rotational speed. The two “break points” are at zero speed and at the “zero torque” speed:

$$\Omega_0 = \frac{V_a}{GI_f}$$

For $0 < \Omega < \Omega_0$, the machine is a motor: electric power in and mechanical power out are both positive. For higher speeds: $\Omega_0 < \Omega$, the machine is a generator, with electrical power in and mechanical power out being both negative. For speeds less than zero, electrical power in is positive and mechanical power out is negative. There are few needs to operate machines in this regime, short of some types of ”plugging” or emergency braking in tractions systems.

Hookups

We have just described a mode of operation of a commutator machine usually called “separately excited”, in which field and armature circuits are controlled separately. This mode of operation is used in some types of traction applications in which the flexibility it affords is useful. For example,

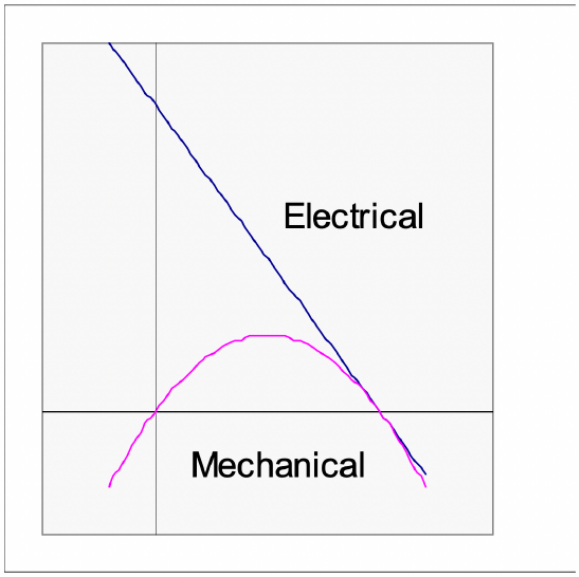

Figure 4: DC Machine Operating Regimes

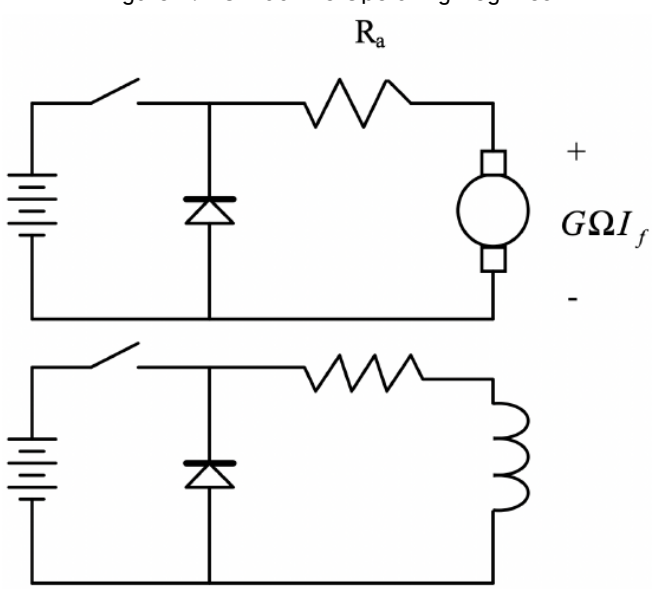

Figure 5: Two-Chopper, separately excited machine hookup

some traction applications apply voltage control in the form of “choppers” to separately excited machines.

Note that the “zero torque speed” is dependend on armature voltage and on field current. For high torque at low speed one would operate the machine with high field current and enough armature voltage to produce the requisite current. As speed increases so does back voltage, and field current may need to be reduced. At any steady operating speed there will be some optimum mix of field and armature currents to produced the required torque. For braking one could (and this is often done) re-connect the armature of the machine to a braking resistor and turn the machine into a generator. Braking torque is controlled by field current.

A subset of the separately excited machine is the shunt connection in which armature and field are supplied by the same source, in parallel. This connection is not widely used any more: it does not yield any meaningful ability to control speed and the simple applications to which is used to be used are mostly being handled by induction machines.

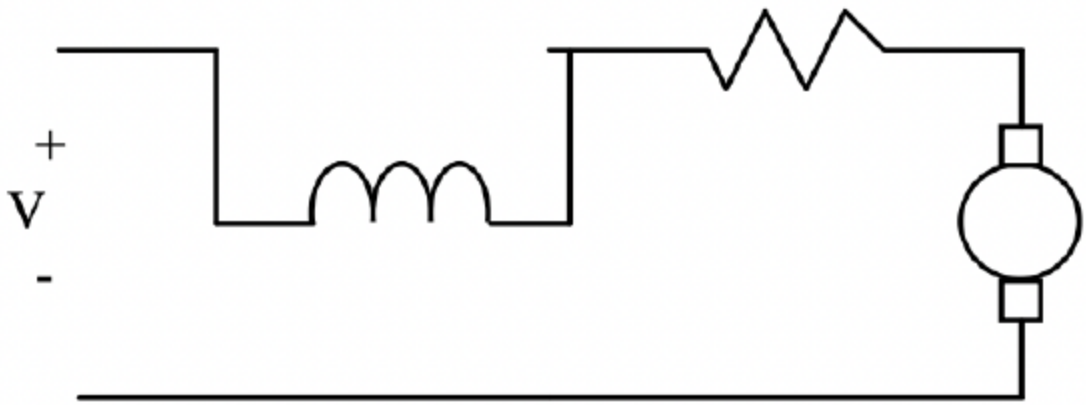

Figure 6: Series Connection

Another connection which is still widely used in the series connection, in which the field winding is sized so that its normal operating current level is the same as normal armature current and the two windings are connected in series. Then:

$$I_a = I_f = \frac{V}{R_a + R_f + G\Omega}$$

And then torque is:

$$T_e = \frac{GV^2}{(R_a + R_f + G\Omega)^2}$$

It is important to note that this machine has no “zero-torque” speed, leading to the possibility that an unloaded machine might accelerate to dangerous speeds. This is particularly true because the commutator, made of pieces of relatively heavy material tied together with non- conductors, is not very strong.

Speed control of series connected machines can be achieved with voltage control and many appliances using this type of machine use choppers or phase control. An older form of control used in traction applications was the series dropping resistor: obviously not a very efficient way of controlling the machine and not widely used (except in old equipment, of course).

A variation on this class of machine is the very widely used “universal motor”, in which the stator and rotor (field and armature) of the machine are both constructed to operate with alternating current. This means that both the field and armature are made of laminated steel. Note that such a machine will operate just as it would have with direct current, with the only addition being the reactive impedance of the two windings. Working with RMS quantities:

$$\underline{I} = \frac{\underline{V}}{R_a + R_f + G\Omega + j\omega\left(L_a + L_f\right)}$$
$$T_e = \frac{|\underline{V}|^2}{\left(R_a + R_f + G\Omega\right)^2 + \left(\omega L_a + \omega L_f\right)^2}$$

where ω is the electrical supply frequency. Note that, unlike other AC machines, the universal motor is not limited in speed to the supply frequency. Appliance motors typically turn substantially faster than the 3,600 RPM limit of AC motors, and this is one reason why they are so widely used: with the high rotational speeds it is possible to produce more power per unit mass (and more power per dollar).

Commutator

The commutator is what makes this machine work. The brush and commutator system of this class of motor involves quite a lot of “black art”, and there are still aspects of how they work which are poorly understood. However, we can make some attempt to show a bit of what the brush/commutator system does.

To start, take a look at the picture shown in Figure 7. Represented are a pair of poles (shaded) and a pair of brushes. Conductors make a group of closed paths. Current from one of the brushes takes two parallel paths. You can follow one of those paths around a closed loop, under each of the two poles (remember that the poles are of opposite polarity) to the opposite brush. Open

commutator segments (most of them) do not carry current into or out of the machine.

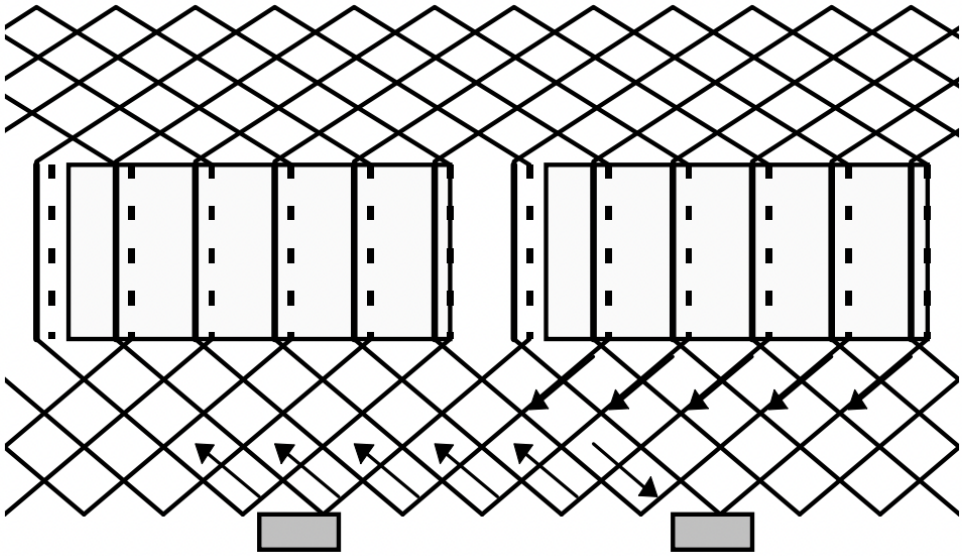

Figure 7: Commutator and Current Paths

A commutation interval occurs when the current in one coil must be reversed. (See Figure 8 In the simplest form this involves a brush bridging between two commutator segments, shorting out that coil. The resistance of the brush causes the current to decay. When the brush leaves the leading segment the current in the leading coil must reverse.

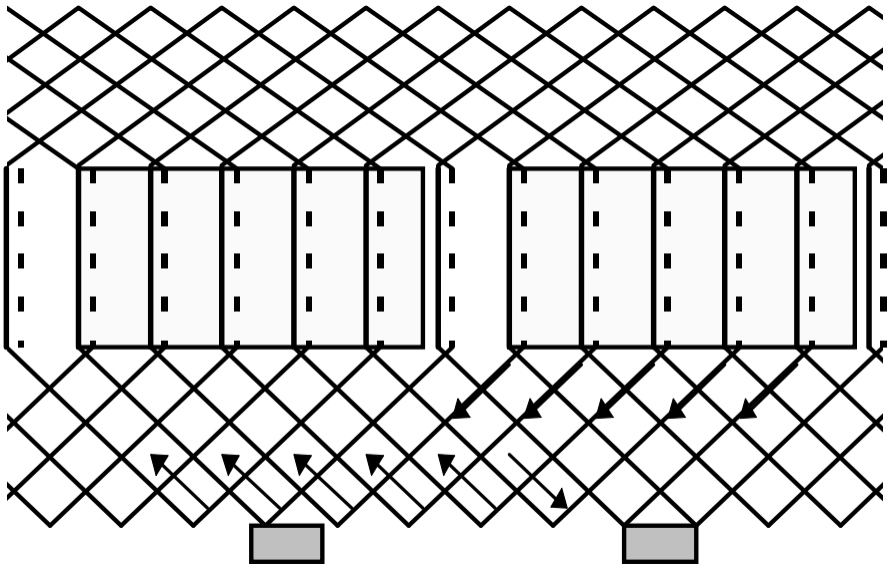

Figure 8: Commutator at Commutation

We will not attempt to fully understand the commutation process in this type of machine, but we can note a few things. Resistive commutation is the process relied upon in small machines.

When the current in one coil must be reversed (because it has left one pole and is approaching the other), that coil is shorted by one of the brushes. The brush resistance causes the current in the coil to decay. Then the leading commutator segment leaves the brush the current MUST reverse (the trailing coil has current in it), and there is often sparking.

Commutation

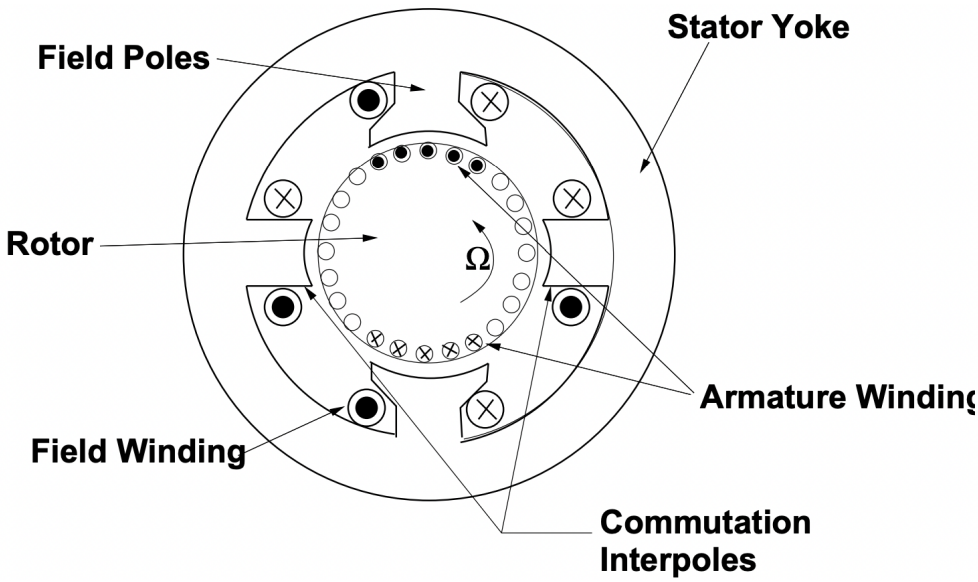

Figure 9: Commutation Interpoles

In larger machines the commutation process would involve too much sparking, which causes brush wear, noxious gases (ozone) that promote corrosion, etc. In these cases it is common to use separate commutation interpoles. These are separate, usually narrow or seemingly vestigal pole pieces which carry armature current. They are arranged in such a way that the flux from the interpole drives current in the commutated coil in the proper direction. Remember that the coil being commutated is located physically between the active poles and the interpole is therefore in the right spot to influence commutation. The interpole is wound with armature current (it is in series with the main brushes). It is easy to see that the interpole must have a flux density proportional to the current to be commutated. Since the speed with which the coil must be commutated is proportional to rotational velocity and so is the voltage induced by the interpole, if the right number of turns are put around the interpole, commutation can be made to be quite accurate.

Compensation

The analysis of commutator machines often ignores armature reaction flux. Obviously these machines DO produce armature reaction flux, in quadrature with the main field. Normally, commutator machines are highly salient and the quadrature inductance is lower than direct-axis inductance, but there is still flux produced. This adds to the flux density on one side of the main poles (possibly leading to saturation). To make the flux distribution more uniform and therefore to avoid this saturation effect of quadrature axis flux, it is common in very highly rated machines to wind compensation coils: essentially mirror-images of the armature coils, but this time wound in slots in the surface of the field poles. Such coils will have the same number of ampere-turns as the

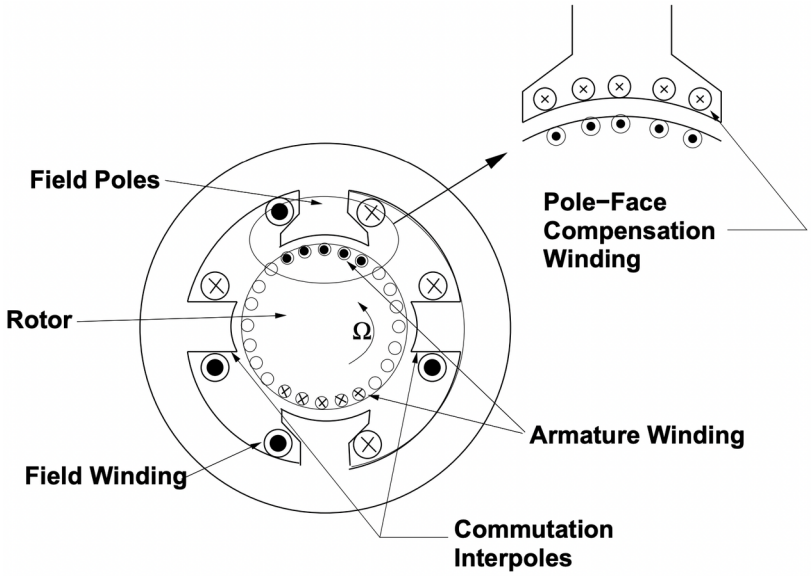

Figure 10: Pole Face Compensation Winding

armature. Normally they have the same number of turns and are connected directly in series with the armature brushes. What they do is to almost exactly cancel the flux produced by the armature coils, leaving only the main flux produced by the field winding. One might think of these coils as providing a reaction torque, produced in exactly the same way as main torque is produced by the armature. A cartoon view of this is shown in Figure 10.

This page titled 11.1: Introduction is shared under a CC BY-NC-SA 4.0 license and was authored, remixed, and/or curated by James Kirtley (MIT OpenCourseWare) via source content that was edited to the style and standards of the LibreTexts platform.

11.2: Permanent Magnets in Electric Machines

Of all changes in materials technology over the last several years, advances in permanent magnets have had the largest impact on electric machines. Permanent magnets are often suitable as replacements for the field windings in machines: that is they can produce the fundamental interaction field. This does three things. First, since the permanent magnet is lossless it eliminates the energy required for excitation, usually improving the efficiency of the machine. Second, since eliminating the excitation loss reduces the heat load it is often possible to make PM machines more compact. Finally, and less appreciated, is the fact that modern permanent magnets have very large coercive force densities which permit vastly larger air gaps than conventional field windings, and this in turn permits design flexibility which can result in even better electric machines.

These advantages come not without cost. Permanent magnet materials have special characteristics which must be taken into account in machine design. The highest performance permanent magnets are brittle ceramics, some have chemical sensitivities, all are sensitive to high temperatures, most have sensitivity to demagnetizing fields, and proper machine design requires understanding the materials well. These notes will not make you into seasoned permanent magnet machine designers. They are, however, an attempt to get started, to develop some of the mathematical skills required and to point to some of the important issues involved.

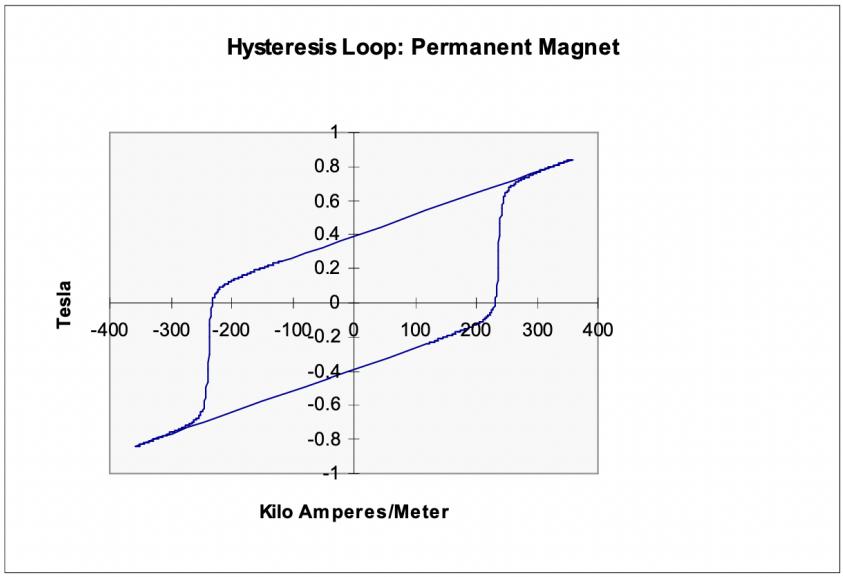

Figure 11: Hysteresis Loop Of Ceramic Permanent Magnet

Permanent magnet materials are, at core, just materials with very wide hysteresis loops. Figure 11 is an example of something close to one of the more popular ceramic magnet materials.Note that this hysteresis loop is so wide that you can see the effect of the permeability of free space.

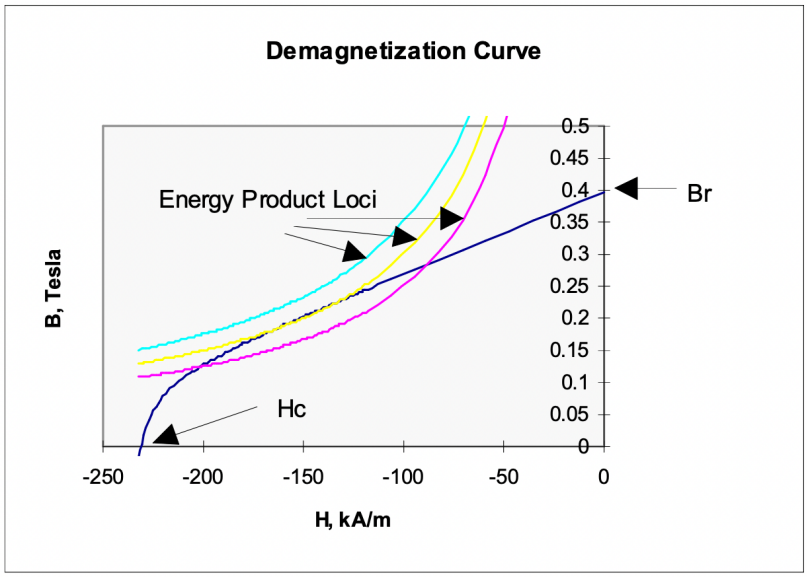

Figure 12: Demagnetization Curve

It is usual to display only part of the magnetic characteristic of permanent magnet materials (see Figure 12), the third quadrant of this picture, because that is where the material is normally operated. Note a few important characteristics of what is called the "demagnetization curve". The remanent flux density B_r, is the value of flux density in the material with zero magnetic field H. The coercive field H_c is the magnetic field at which the flux density falls to zero. Shown also on the curve are loci of constant energy product. This quantity is unfortunately named, for although it has the same units as energy it represents real energy in only a fairly general sense. It is the product of flux density and field intensity. As you already know, there are three commonly used systems of units for magnetic field quantities, and these systems are often mixed up to form very confusing units. We will try to stay away from the English system of units in which field intensity H is measured in amperes per inch and flux density B in lines (actually, usually kilolines) per square inch. In CGS units flux density is measured in Gauss (or kilogauss) and magnetic field intensity in Oersteds. And in SI the unit of flux density is the Tesla, which is one Weber per square meter, and the unit of field intensity is the Ampere per meter. Of these, only the last one, A/m is obvious. A Weber is a vo }\) Tesla. And, finally, an Oersted is that field intensity required to produce one Gauss in the permeability of free space. Since the permeability of free space $\mu_0 = 4\pi \times 10^{-7} Hy/m$, this means that one Oe is about 79.58 A/m. Commonly, the energy product is cited in MgOe (Mega-Gauss-Oersted)s. One MgOe is equal to $7.958k \text{ J/m}^3$. A commonly used measure for the performance of a permanent magnet material is the maximum energy product, the largest value of this product along the demagnetization curve.

To start to understand how these materials might be useful, consider the situation shown in Figure 13: A piece of permanent magnet material is wrapped in a magnetic circuit with effectively infinite permeability. Assume the thing has some (finite) depth in the direction you can't see. Now, if we take Ampere's law around the path described by the dotted line,

$$\oint \vec{H} \cdot d\vec{\ell} = 0$$

since there is no current anywhere in the problem. If magnetization is upwards, as indicated by the arrow, this would indicate that the flux density in the permanent magnet material is equal to the remanent flux density (also upward).

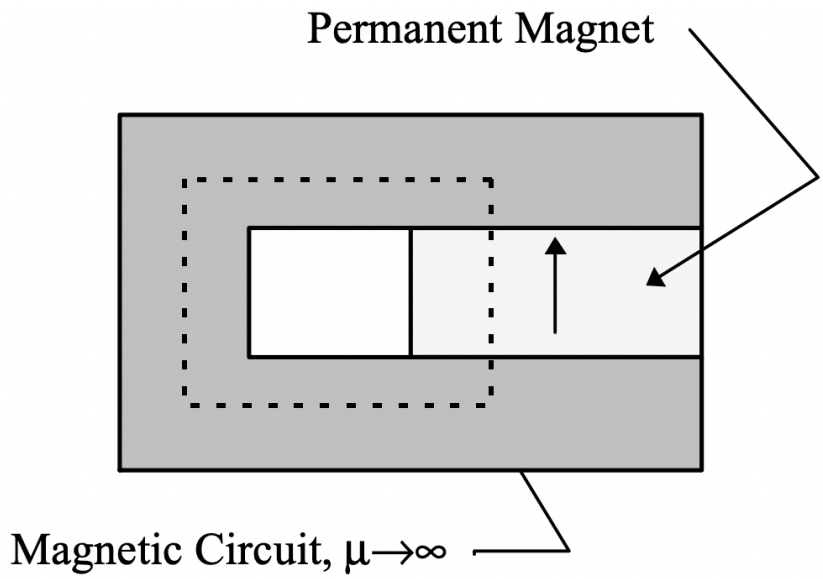

Figure 13: Permanent Magnet in Magnetic Circuit

A second problem is illustrated in Figure 14, in which the same magnet is embedded in a magnetic circuit with an air gap. Assume that the gap has width g and area Ag. The magnet has height hm and area Am. For convenience, we will take the positive reference direction to be up (as we see it here) in the magnet and down in the air-gap.

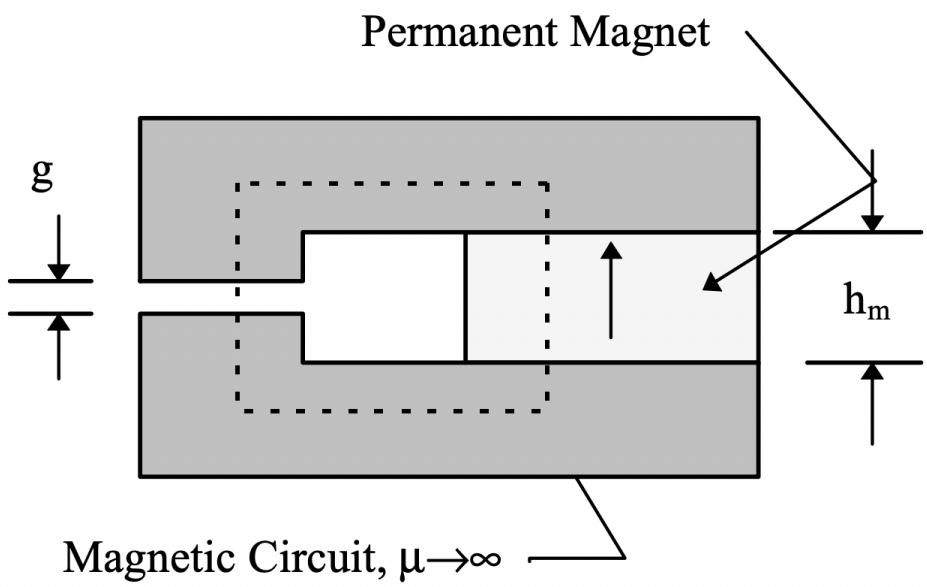

Figure 14: Permanent Magnet Driving an Air-Gap

Thus we are following the same reference direction as we go around the Ampere's Law loop. That becomes:

$$\oint \vec{H} \cdot d\vec{\ell} = H_m h_m + H_g g$$

Now, Gauss' law could be written for either the upper or lower piece of the magnetic circuit. Assuming that the only substantive flux leaving or entering the magnetic circuit is either in the magnet or the gap:

$$\oiint \vec{B} \cdot d\vec{A} = B_m A_m - \mu_0 H_g A_g$$

Solving this pair we have:

$$B_m = -\mu_0 \frac{A_g}{A_m} \frac{h_m}{g} H_m = \mu_0 \mathcal{P}_u H_m$$

This defines the unit permeance, essentially the ratio of the permeance facing the permanent magnet to the internal permeance of the magnet. The problem can be, if necessary, solved graphically, since the relationship between B_m and H_m is inherently nonlinear, as shown in Figure 15 “load line” analysis of a nonlinear electronic circuit.

Now, one more ‘cut’ at this problem. Note that, at least for fairly large unit permeances the slope of the magnet characteristic is fairly constant. In fact, for most of the permanent magnets used in machines (the one important exception is the now rarely used ALNICO alloy magnet), it is generally acceptable to approximate the demagnitization curve with:

$$\vec{B}_m = \mu_m \left(\vec{H}_m + \vec{M}_0 \right)$$

Here, the magnetization M_0 is fixed. Further, for almost all of the practical magnet materials the magnet permeability is nearly the same as that of free space $(\mu_m \approx \mu_0)$. With that in mind,

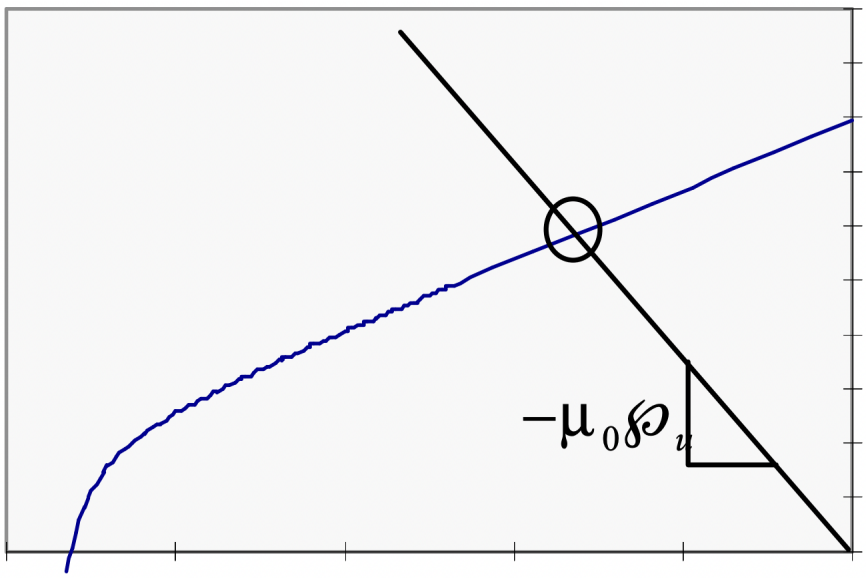

Figure 15: Load Line, Unit Permeance Analysis

consider the problem shown in Figure 16, in which the magnet fills only part of a gap in a magnetic circuit. But here the magnet and gap areas are essentially the same. We could regard the magnet as simply a magnetization.

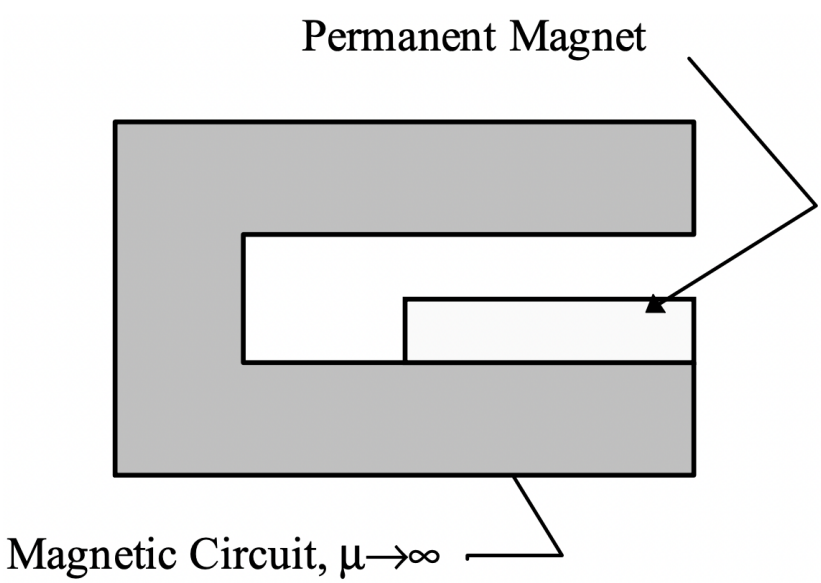

Figure 16: Surface Magnet Primitive Problem

In the region of the magnet and the air-gap, Ampere’s Law and Gauss’ law can be written:

$$\nabla \times \vec{H} = 0$$
$$\nabla \cdot \mu_0 \left(\vec{H}_m + \vec{M}_0\right) = 0$$
$$\nabla \cdot \mu_0 \vec{H}_g = 0$$

Now, if in the magnet the magnetization is constant, the divergence of H in the magnet is zero. Because there is no current here, H is curl free, so that everywhere:

$$\vec{H} = -\nabla\psi$$
$$\nabla^2\psi = 0$$

That is, magnetic field can be expressed as the gradient of a scalar potential which satisfies Laplace's equation. It is also pretty clear that, if we can assign the scalar potential to have a value of zero anywhere on the surface of the magnetic circuit it will be zero over all of the magnetic circuit (i.e. at both the top of the gap and the bottom of the magnet). Finally, note that we can't actually assume that the scalar potential satisfies Laplace's equation everywhere in the problem. In fact the divergence of M is zero everywhere except at the top surface of the magnet where it is singular! In fact, we can note that there is a (some would say fictitious) magnetic charge density:

$$\rho_m = -\nabla \cdot \vec{M}$$

At the top of the magnet there is a discontinuous change in M and so the equivalent of a magnetic surface charge. Using H_g to note the magnetic field above the magnet and H_m to note the magnetic field in the magnet,

$$\mu_0 H_g = \mu_0 \left(H_m + M_0\right)$$
$$\sigma_m = M_0 = H_g - H_m$$

and then to satisfy the potential condition, if hm is the height of the magnet and g is the gap:

$$gH_g = h_m H_m$$

Solving,

$$H_g = M_0 \frac{h_m}{h_m + g}$$

Now, one more observation could be made. We would produce the same air-gap flux density if we regard the permanent magnet as having a surface current around the periphery equal to the magnetization intensity. That is, if the surface current runs around the magnet:

$$K_\phi = M_0$$

This would produce an MMF in the gap of:

$$F = K_\phi h_m$$

and then since the magnetic field is just the MMF divided by the total gap:

$$H_g = \frac{F}{h_m + g} = M_0 \frac{h_m}{h_m + g}$$

The real utility of permanent magnets comes about from the relatively large magnetizations: numbers of a few to several thousand amperes per meter are common, and these would translate into enormous current densities in magnets of ordinary size.

This page titled 11.2: Permanent Magnets in Electric Machines is shared under a CC BY-NC-SA 4.0 license and was authored, remixed, and/or curated by James Kirtley (MIT OpenCourseWare) via source content that was edited to the style and standards of the LibreTexts platform.

11.3: Simple Permanent Magnet Machine Structures-Commutator Machines

Figure 17 is a cartoon picture of a cross section of the geometry of a two-pole commutator machine using permanent magnets. This is actually the most common geometry that is used. The rotor (armature) of the machine is a conventional, windings-in-slots type, just as we have already seen

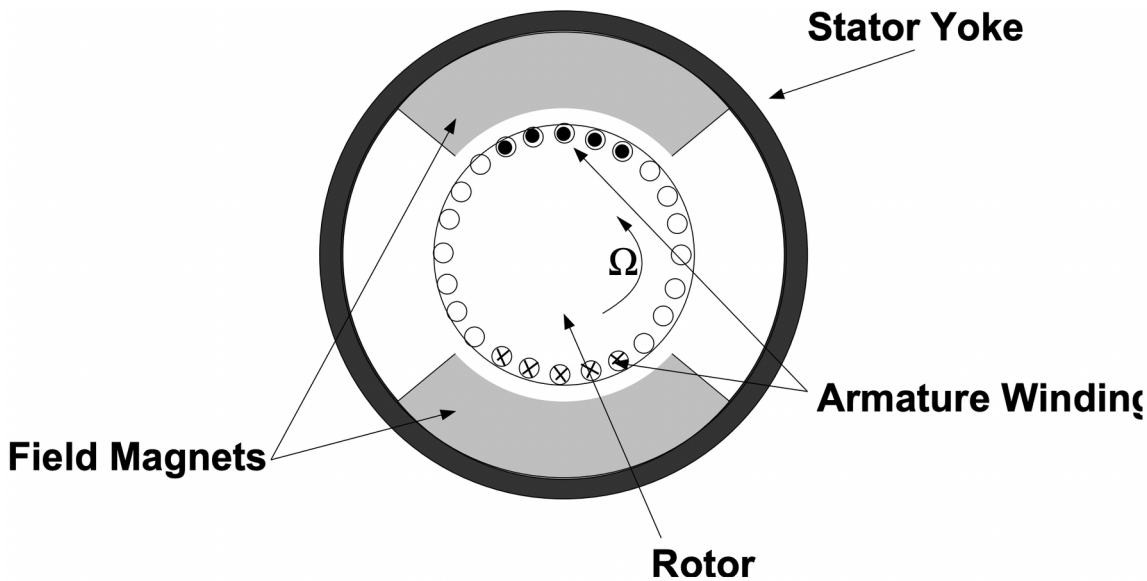

Figure 17: PM Commutator Machine

for commutator machines. The field magnets are fastened (often just bonded) to the inside of a steel tube that serves as the magnetic flux return path.

Assume for the purpose of first-order analysis of this thing that the magnet is describable by its remanent flux density B_r and had permeability of μ_0. First, we will estimate the useful magnetic flux density and then will deal with voltage generated in the armature. Interaction Flux Density Using the basics of the analysis presented above, we may estimate the radial magnetic flux density at the air-gap as being:

$$B_d = \frac{B_r}{1+\frac{1}{\mathcal{P}_c}}$$

where the effective unit permeance is:

$$\mathcal{P}_c = \frac{f_l}{f_f}\frac{h_m}{g}\frac{A_g}{A_m}$$

A book on this topic by James Ireland suggests values for the two “fudge factors”:

1. The “leakage factor” f_l is cited as being about 1.1.
2. The “reluctance factor” f_f is cites as being about 1.2.

We may further estimate the ratio of areas of the gap and magnet by:

$$\frac{A_g}{A_m} = \frac{R+\frac{g}{2}}{R+g+\frac{h_m}{2}}$$

Now, there are a bunch of approximations and hand wavings in this expression, but it seems to work, at least for the kind of machines contemplated.

A second correction is required to correct the effective length for electrical interaction. The reason for this is that the magnets

produce fringing fields, as if they were longer than the actual "stack length" of the rotor (sometimes they actually are). This is purely empirical, and Ireland gives a value for effective length for voltage generation of:

$$\ell_{\text{eff}} = \frac{\ell^*}{f_\ell}$$

where $\ell^* = \ell + 2NR$, and the empirical coefficient

$$N \approx \frac{A}{B} \log\left(1 + B\frac{h_m}{R}\right)$$

where

$$B = 7.4 - 9.0\frac{h_m}{R}$$
$$A = 0.9$$

Voltage

It is, in this case, simplest to consider voltage generated in a single wire first. If the machine is running at angular velocity Ω, speed voltage is, while the wire is under a magnet,

$$v_s = \Omega R \ell B_r$$

Now, if the magnets have angular extent θ_m the voltage induced in a wire will have a waveform as shown in Figure 18: It is pulse-like and has the same shape as the magnetic field of the magnets.

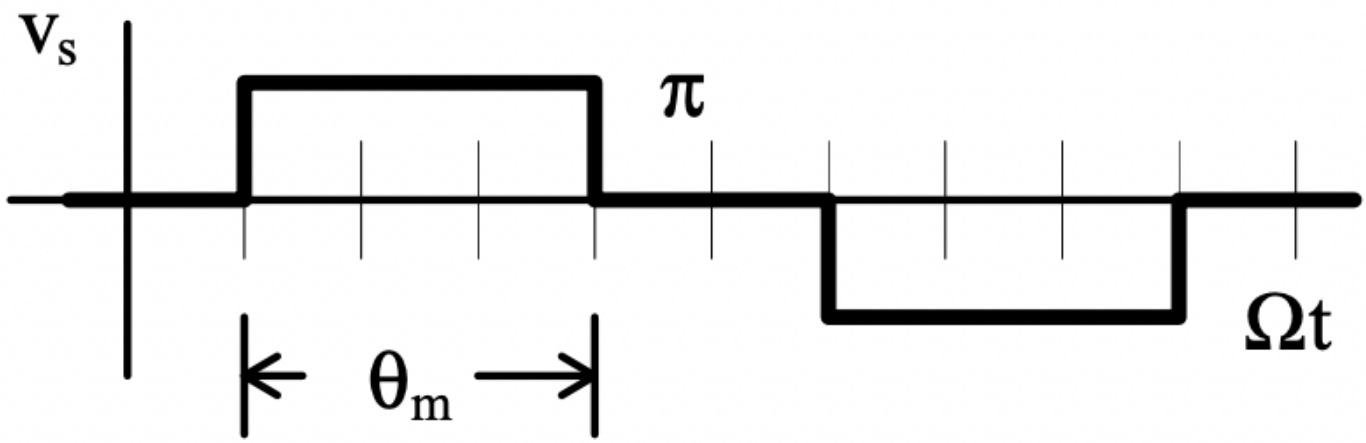

Figure 18: Voltage Induced in One Conductor

The voltage produced by a coil is actually made up of two waveforms of exactly this form, but separated in time by the "coil throw" angle. Then the total voltage waveform produced will be the sum of the two waveforms. If the coil thrown angle is larger than the magnet angle, the two voltage waveforms add to look like this: There are actually two coil-side waveforms that add with a slight phase shift.

If, on the other hand, the coil thrown is smaller than the magnet angle, the picture is the same, only the width of the pulses is that of the coil rather than the magnet. In either case the average voltage generated by a coil is:

$$v = \Omega R \ell N_s \frac{\theta^*}{\pi} B_d$$

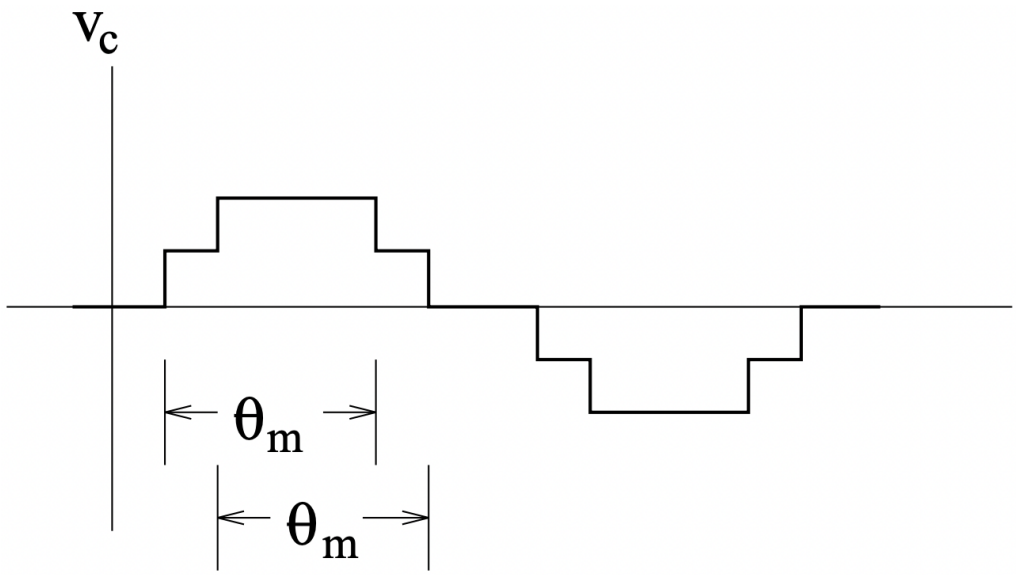

Figure 19: Voltage Induced in a Coil

where θ^* is the lesser of the coil throw or magnet angles and N_s is the number of series turns in the coil. This gives us the opportunity to develop the number of "active" turns:

$$\frac{C_a}{m} = N_s \frac{\theta^*}{\pi} = \frac{C_{\text{tot}}}{m} \frac{\theta^*}{\pi}$$

Here, C_a is the number of active conductors, C_{tot} is the total number of conductors and m is the number of parallel paths. The motor coefficient is then:

$$K = \frac{R\ell_{\text{eff}} C_{\text{tot}} B_d}{m} \frac{\theta^*}{\pi}$$

Armature Resistance

The last element we need for first-order prediction of performance of the motor is the value of armature resistance. The armature resistance is simply determined by the length and area of the wire and by the number of parallel paths (generally equal to 2 for small commutator motors). If we note N_c as the number of coils and N_a as the number of turns per coil,

$$N_s = \frac{N_c N_a}{m}$$

Total armature resistance is given by:

$$R_a = 2\rho_w \ell_t \frac{N_s}{m}$$

where ρ_w is the resistivity (per unit length) of the wire:

$$\rho_w = \frac{1}{\frac{\pi}{4} d_w^2 \sigma_w}$$

(d_w is wire diameter, σ_w is wire conductivity and ℓ_t is length of one half-turn). This length depends on how the machine is wound, but a good first-order guess might be something like this:

$$\ell_t \approx \ell + \pi R$$

This page titled 11.3: Simple Permanent Magnet Machine Structures- Commutator Machines is shared under a CC BY-NC-SA 4.0 license and was authored, remixed, and/or curated by James Kirtley (MIT OpenCourseWare) via source content that was edited to the style and standards of the LibreTexts platform.

12: PERMANENT MAGNET "BRUSHLESS DC" MOTORS

This chapter is a brief introduction to the design evaluation of permanent magnet motors, with an eye toward servo and drive applications. It is organized in the following manner: First, we describe three different geometrical arrangements for permanent magnet motors:

1. Surface Mounted Magnets, Conventional Stator,
2. Surface Mounted Magnets, Air-Gap Stator Winding, and
3. Internal Magnets (Flux Concentrating).

After a qualitative discussion of these geometries, we will discuss the elementary rating parameters of the machine and show how to arrive at a rating and how to estimate the torque and power vs. speed capability of the motor. Then we will discuss how the machine geometry can be used to estimate both the elementary rating parameters and the parameters used to make more detailed estimates of the machine performance.

Some of the more involved mathematical derivations are contained in appendices to this note.

12.1: Motor Morphologies

12.2: Zeroth Order Rating

12.3: Parameter Estimation

12.4: Current Rating and Resistance

12.5: Appendix 1- Air-Gap Winding Inductance

12.6: Appendix 2- Permanent Magnet Field Analysis

12.7: Layout

This page titled 12: Permanent magnet "Brushless DC" motors is shared under a CC BY-NC-SA 4.0 license and was authored, remixed, and/or curated by James Kirtley (MIT OpenCourseWare) via source content that was edited to the style and standards of the LibreTexts platform.

12.1: Motor Morphologies

There are, of course, many ways of building permanent magnet motors, but we will consider only a few in this note. Actually, once these are understood, rating evaluations of most other geometrical arrangements should be fairly straightforward. It should be understood that the “rotor inside” vs. “rotor outside” distinction is in fact trivial, with very few exceptions, which we will note.

Surface Magnet Machines

Figure 1 shows the basic magnetic morphology of the motor with magnets mounted on the surface of the rotor and an otherwise conventional stator winding. This sketch does not show some of the important mechanical aspects of the machine, such as the means for fastening the permanent magnets to the rotor, so one should look at it with a bit of caution. In addition, this sketch and the other sketches to follow are not necessarily to a scale that would result in workable machines.

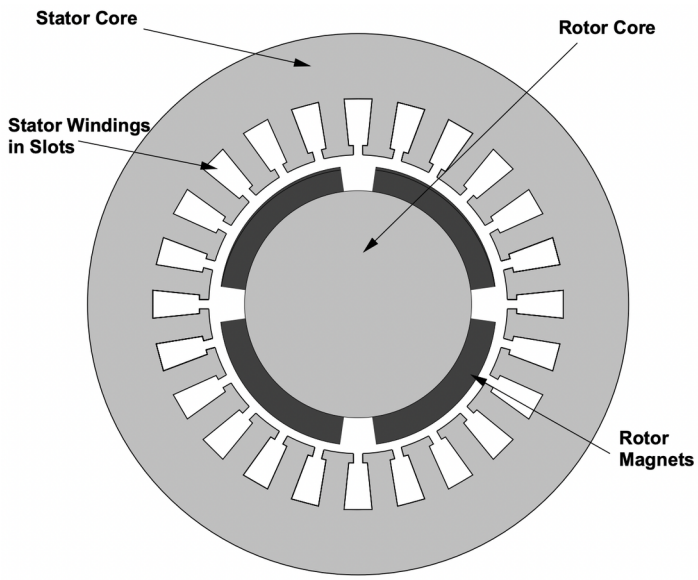

Figure 1: Axial View of a Surface Mount Motor

This figure shows an axial section of a four-pole $(p = 2)$ machine. The four magnets are mounted on a cylindrical rotor “core”, or shaft, made of ferromagnetic material. Typically this would simply be a steel shaft. In some applications the magnets may be simply bonded to the steel. For applications in which a glue joint is not satisfactory (e.g. for high speed machines) some sort of rotor banding or retaining ring structure is required.

The stator winding of this machine is “conventional”, very much like that of an induction motor, consisting of wires located in slots in the surface of the stator core. The stator core itself is made of laminated ferromagnetic material (probably silicon iron sheets), the character and thickness of the sheets determined by operating frequency and efficiency requirements. They are required to carry alternating magnetic fields, so must be laminated to reduce eddy current losses.

This sort of machine is simple in construction. Note that the operating magnetic flux density in the air-gap is nearly the same as in the magnets, so that this sort of machine cannot have air-gap flux densities higher than that of the remanent flux density of the magnets. If low cost ferrite magnets are used, this means relatively low induction and consequently relatively low efficiency and power density. (Note the qualifier “relatively” here!). Note, however, that with modern, high performance permanent magnet materials in which remanent flux densities can be on the order of 1.2 T, air-gap working flux densities can be on the order of 1 T. With the requirement for slots to carry the armature current, this may be a practical limit for air-gap flux density anyway.

It is also important to note that the magnets in this design are really in the “air gap” of the machine, and therefore are exposed to all of the time- and space- harmonics of the stator winding MMF. Because some permanent magnets have electrical conductivity (particularly the higher performance magnets), any asynchronous fields will tend to produce eddy currents and consequent losses in the magnets.

Interior Magnet or Flux Concentrating Machines

Interior magnet designs have been developed to counter several apparent or real shortcomings of surface mount motors:

- Flux concentrating designs allow the flux density in the air-gap to be higher than the flux density in the magnets themselves.
- In interior magnet designs there is some degree of shielding of the magnets from high order space harmonic fields by the pole pieces.
- There are control advantages to some types of interior magnet motors, as we will show anon. Essentially, they have relatively large negative saliency which enhances “flux weakening” for high speed operation, in rather direct analogy the what is done in DC machines.
- Some types of internal magnet designs have (or claim) structural advantages over surface mount magnet designs.

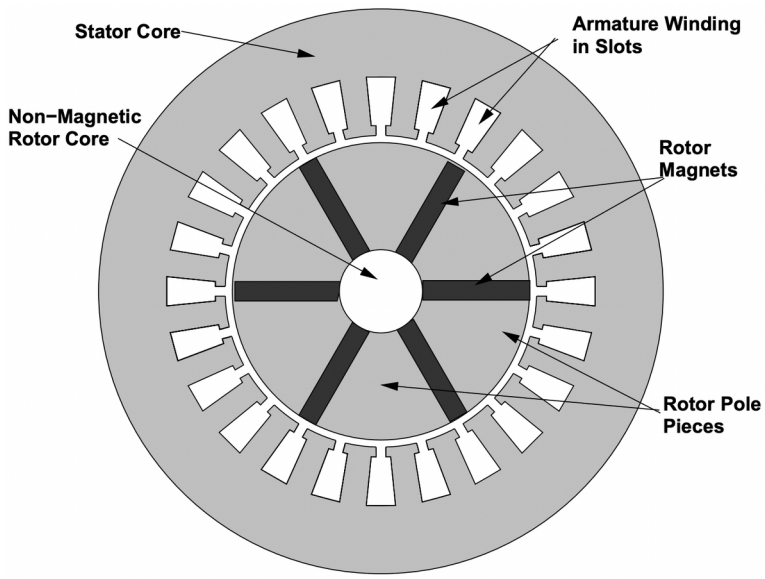

Figure 2: Axial View of a Flux Concentrating Motor

The geometry of one type of internal magnet motor is shown (crudely) in Figure 2. The permanent magnets are oriented so that their magnetization is azimuthal. They are located between wedges of magnetic material (the pole pieces) in the rotor. Flux passes through these wedges, going radially at the air- gap, then azimuthally through the magnets. The central core of the rotor must be non-magnetic, to prevent “shorting out” the magnets. No structure is shown at all in this drawing, but quite obviously this sort of rotor is a structural challenge. Shown is a six-pole machine. Typically, one does not expect flux concentrating machines to have small pole numbers, because it is difficult to get more area inside the rotor than around the periphery. On the other hand, a machine built in this way but without substantial flux concentration will still have saliency and magnet shielding properties.

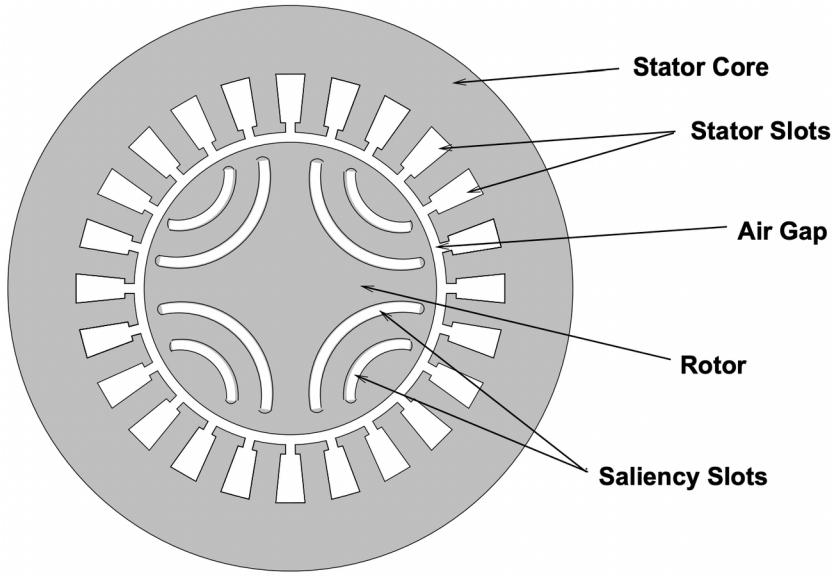

Figure 3: Axial View of Internal Magnet Motor

A second morphology for an internal magneti motor is shown in Figure 3. This geometry has been proposed for highly salient synchronous machines without permanent magnets: such machines would run on the saliency torque and are called synchronous reluctance motors. however, the saliency slots may be filled with permanent magnet material, giving them some internally generated flux as well. The rotor iron tends to short out the magnets, so that the 'bridges' around the ends of the permanent magnets must be relatively thin. They are normally saturated.

At first sight, these machines appear to be quite complicated to analyze, and that judgement seems to hold up.

Air Gap Armature Windings

Shown in Figure 4 is a surface-mounted magnet machine with an air-gap, or surface armature winding. Such machines take advantage of the fact that modern permanent magnet materials have very low permeabilities and that, therefore, the magnetic field produced is relatively insensitive to the size of the air-gap of the machine. It is possible to eliminate the stator teeth and use all of the periphery of the air-gap for windings.

Not shown in this figure is the structure of the armature winding. This is not an issue in "conventional" stators, since the armature is contained in slots in the iron stator core. The use of an air-gap winding gives opportunities for economy of construction, new armature winding forms such as helical windings, elimination of "cogging" torques, and (possibly) higher power densities.

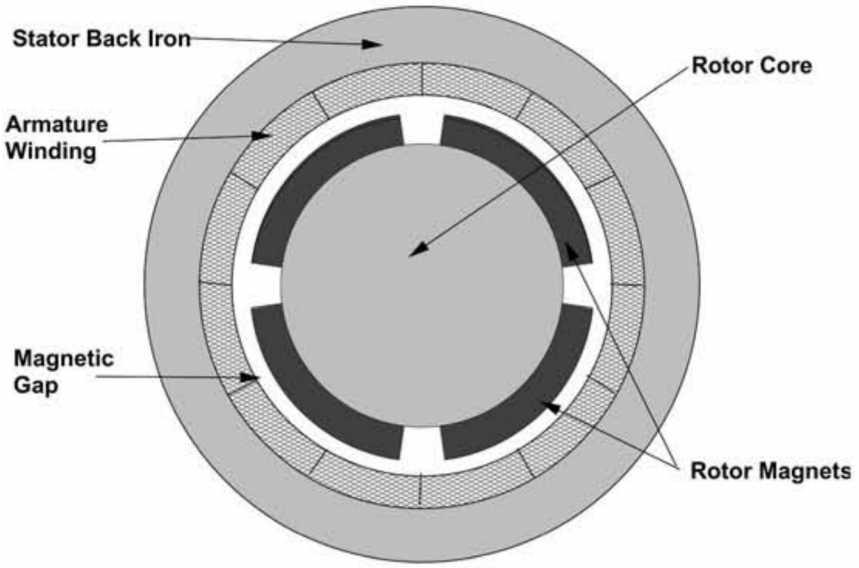

Figure 4: Axial View of a PM Motor With an Air-Gap Winding

This page titled 12.1: Motor Morphologies is shared under a CC BY-NC-SA 4.0 license and was authored, remixed, and/or curated by James Kirtley (MIT OpenCourseWare) via source content that was edited to the style and standards of the LibreTexts platform.

12.2: Zeroth Order Rating

In determining the rating of a machine, we may consider two separate sets of parameters. The first set, the elementary rating parameters, consist of the machine inductances, internal flux linkage and stator resistance. From these and a few assumptions about base and maximum speed it is possible to get a first estimate of the rating and performance of the motor. More detailed performance estimates, including efficiency in sustained operation, require estimation of other parameters. We will pay more attention to that first set of parameters, but will attempt to show how at least some of the more complete operating parameters can be estimated.

Voltage and Current: Round Rotor

To get started, consider the equivalent circuit shown in Figure 5. This is actually the equivalent circuit which describes all round rotor synchronous machines. It is directly equivalent only to some of the machines we are dealing with here, but it will serve to illustrate one or two important points.

What is shown here is the equivalent circuit of a single phase of the machine. Most motors are three-phase, but it is not difficult to carry out most of the analysis for an arbitrary number of phases. The circuit shows an internal voltage E_a and a reactance X which together with the terminal current I determine the terminal voltage V. In this picture armature resistance is ignored. If the machine is running in the sinusoidal steady state, the major quantities are of the form:

$$\begin{aligned} E_a &= \omega\lambda_a \cos(\omega t + \delta) \\ V_t &= V \cos \omega t \\ I_a &= I \cos(\omega t - \psi) \end{aligned}$$

The machine is in synchronous operation if the internal and external voltages are at the same

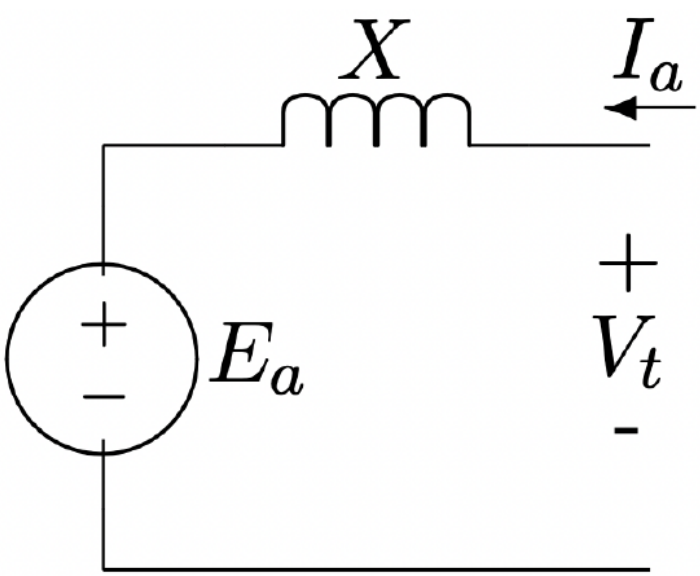

Figure 5: Synchronous Machine Equivalent Circuit

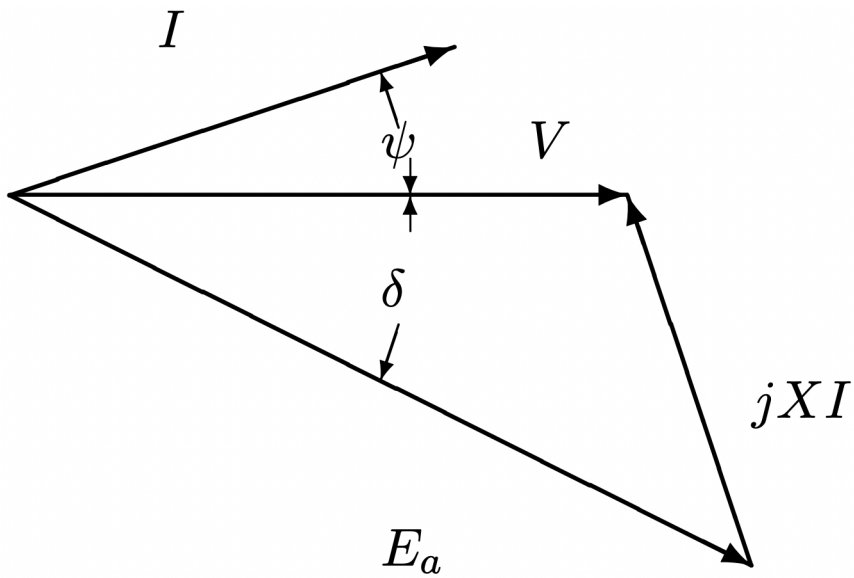

Figure 6: Phasor Diagram For A Synchronous Machine

frequency and have a constant (or slowly changing) phase relationship (δ). The relationship between the major variables may be visualized by the phasor diagram shown in Figure 3.1. The internal voltage is just the time derivative of the internal flux from the permanent magnets, and the voltage drop in the machine reactance is also the time derivative of flux produced by armature current in the air-gap and in the "leakage" inductances of the machine. By convention, the angle ψ is positive when current I lags voltage V and the angle δ is positive then internal voltage E_a leads terminal voltage V. So both of these angles have negative sign in the situation shown in Figure 3.1.

If there are q phases, the time average power produced by this machine is simply:

$$P = \frac{q}{2} V I \cos \psi$$

For most polyphase machines operating in what is called "balanced" operation (all phases doing the same thing with uniform phase differences between phases), torque (and consequently power) are approximately constant. Since we have ignored power dissipated in the machine armature, it must be true that power absorbed by the internal voltage source is the same as terminal power, or:

$$P = \frac{q}{2} E_a I \cos(\psi - \delta)$$

Since in the steady state:

$$P = \frac{\omega}{p} T$$

where T is torque and ω/p is mechanical rotational speed, torque can be derived from the terminal quantities by simply:

$$T = p \frac{q}{2} \lambda_a I \cos(\psi - \delta)$$

In principal, then, to determine the torque and hence power rating of a machine it is only necessary to determine the internal flux, the terminal current capability, and the speed capability of the rotor. In fact it is almost that simple. Unfortunately, the model shown in Figure 5 is not quite complete for some of the motors we will be dealing with, and we must go one more level into machine theory.

A Little Two-Reaction Theory

The material in this subsection is framed in terms of three-phase $(q = 3)$ machine theory, but it is actually generalizable to an arbitrary number of phases. Suppose we have a machine whose three-phase armature can be characterized by internal fluxes and inductance which may, in general, not be constant but is a function of rotor position. Note that the simple model we presented in the previous subsection does not conform to this picture, because it assumes a constant terminal inductance. In that case, we

have:

$$\underline{\lambda}_{ph} = \underline{\underline{L}}_{ph}\underline{\underline{I}}_{ph} + \underline{\lambda_R} \tag{12.2.1}$$

where $\underline{\lambda_R}$ is the set of internally produced fluxes (from the permanent magnets) and the stator winding may have both self- and mutual- inductances.

Now, we find it useful to do a transformation on these stator fluxes in the following way: each armature quantity, including flux, current and voltage, is projected into a coordinate system that is fixed to the rotor. This is often called the Park's Transformation. For a three phase machine it is:

$$\begin{bmatrix} u_d \\ u_q \\ u_0 \end{bmatrix} = \underline{u}_{dq} = \underline{\underline{T}}\underline{u}_{ph} = \underline{\underline{T}} \begin{bmatrix} u_a \\ u_b \\ u_c \end{bmatrix} \tag{12.2.2}$$

Where the transformation and its inverse are:

$$\underline{\underline{T}} = \frac{2}{3} \begin{bmatrix} \cos\theta & \cos\left(\theta - \frac{2\pi}{3}\right) & \cos\left(\theta + \frac{2\pi}{3}\right) \\ -\sin\theta & -\sin\left(\theta - \frac{2\pi}{3}\right) & -\sin\left(\theta + \frac{2\pi}{3}\right) \\ \frac{1}{2} & \frac{1}{2} & \frac{1}{2} \end{bmatrix} \tag{12.2.3}$$

$$\underline{\underline{T}}^{-1} = \begin{bmatrix} \cos\theta & -\sin\theta & 1 \\ \cos\left(\theta - \frac{2\pi}{3}\right) & -\sin\left(\theta - \frac{2\pi}{3}\right) & 1 \\ \cos\left(\theta + \frac{2\pi}{3}\right) & -\sin\left(\theta + \frac{2\pi}{3}\right) & 1 \end{bmatrix} \tag{12.2.4}$$

It is easy to show that balanced polyphase quantities in the stationary, or phase variable frame, translate into constant quantities in the so-called "d-q" frame. For example:

$$\begin{aligned} I_a &= I\cos\omega t \\ I_b &= I\cos\left(\omega t - \frac{2\pi}{3}\right) \\ I_c &= I\cos\left(\omega t + \frac{2\pi}{3}\right) \\ \theta &= \omega t + \theta_0 \end{aligned}$$

maps to:

$$\begin{aligned} I_d &= I\cos\theta_0 \\ I_q &= -I\sin\theta_0 \end{aligned}$$

Now, if $\theta = \omega t + \theta_0$, the transformation coordinate system is chosen correctly and the "d-" axis will correspond with the axis on which the rotor magnets are making positive flux. That happens if, when $\theta = 0$, phase A is linking maximum positive flux from the permanent magnets. If this is the case, the internal fluxes are:

$$\begin{aligned} \lambda_{aa} &= \lambda_f\cos\theta \\ \lambda_{ab} &= \lambda_f\cos\left(\theta - \tfrac{2\pi}{3}\right) \\ \lambda_{ac} &= \lambda_f\cos\left(\theta + \tfrac{2\pi}{3}\right) \end{aligned}$$

Now, if we compute the fluxes in the d-q frame, we have:

$$\underline{\lambda}_{dq} = \underline{\underline{L}}_{dq}\underline{I}_{dq} + \underline{\lambda}_R = \underline{\underline{T}}\underline{\underline{L}}_{ph}\underline{\underline{T}}^{-1}\underline{I}_{dq} + \underline{\lambda}_R \tag{12.2.5}$$

Now: two things should be noted here. The first is that, if the coordinate system has been chosen as described above, the flux induced by the rotor is, in the d-q frame, simply:

$$\underline{\lambda}_R = \begin{bmatrix} \lambda_f \\ 0 \\ 0 \end{bmatrix} \tag{12.2.6}$$

That is, the magnets produce flux only on the d- axis.

The second thing to note is that, under certain assumptions, the inductances in the d-q frame are independent of rotor position and have no mutual terms. That is:

$$\underline{\underline{L}}_{dq} = \underline{\underline{T}}\underline{\underline{L}}_{ph}\underline{\underline{T}}^{-1} = \begin{bmatrix} L_d & 0 & 0 \\ 0 & L_q & 0 \\ 0 & 0 & L_0 \end{bmatrix} \tag{12.2.7}$$

The assertion that inductances in the d-q frame are constant is actually questionable, but it is close enough to being true and analyses that use it have proven to be close enough to being correct that it (the assertion) has held up to the test of time. In fact the deviations from independence on rotor position are small. Independence of axes (that is, absence of mutual inductances in the d-q frame) is correct because the two axes are physically orthogonal. We tend to ignore the third, or "zero" axis in this analysis. It doesn't couple to anything else and has neither flux nor current anyway. Note that the direct- and quadrature- axis inductances are in principle straightforward to compute. They are

direct axis the inductance of one of the armature phases (corrected for the fact of multiple phases) with the rotor aligned with the axis of the phase, and

quadrature axis the inductance of one of the phases with the rotor aligned 90 electrical degrees away from the axis of that phase.

Next, armature voltage is, ignoring resistance, given by:

$$\underline{V}_{ph} = \frac{d}{dt}\underline{\lambda}_{ph} = \frac{d}{dt}\underline{\underline{T}}^{-1}\underline{\lambda}_{dq} \tag{12.2.8}$$

and that the transformed armature voltage must be:

$$\begin{aligned} \underline{V}_{dq} &= \underline{\underline{T}}\underline{V}_{ph} \\ &= \underline{\underline{T}}\frac{d}{dt}\left(\underline{\underline{T}}^{-1}\underline{\lambda}_{dq}\right) \\ &= \frac{d}{dt}\underline{\lambda}_{dq} + \left(\underline{\underline{T}}\frac{d}{dt}\underline{\underline{T}}^{-1}\right)\underline{\lambda}_{dq} \end{aligned} \tag{12.2.9}$$

The second term in this expresses "speed voltage". A good deal of straightforward but tedious manipulation yields:

$$\underline{\underline{T}}\frac{d}{dt}\underline{\underline{T}}^{-1} = \begin{bmatrix} 0 & -\frac{d\theta}{dt} & 0 \\ \frac{d\theta}{dt} & 0 & 0 \\ 0 & 0 & 0 \end{bmatrix} \tag{12.2.10}$$

The direct- and quadrature- axis voltage expressions are then:

$$V_d = \frac{d\lambda_d}{dt} - \omega\lambda_q \tag{12.2.11}$$

$$V_q = \frac{d\lambda_q}{dt} + \omega\lambda_d \tag{12.2.12}$$

where

$$\omega = \frac{d\theta}{dt}$$

Instantaneous power is given by:

$$P = V_a I_a + V_b I_b + V_c I_c \tag{12.2.13}$$

Using the transformations given above, this can be shown to be:

$$P = \frac{3}{2}V_d I_d + \frac{3}{2}V_q I_q + 3V_0 I_0 \tag{12.2.14}$$

which, in turn, is:

$$P = \omega \frac{3}{2}\left(\lambda_d I_q - \lambda_q I_d\right) + \frac{3}{2}\left(\frac{d\lambda_d}{dt} I_d + \frac{d\lambda_q}{dt} I_q\right) + 3\frac{d\lambda_0}{dt} I_0 \tag{12.2.15}$$

Then, noting that $\omega = p\Omega$ and that (15) describes electrical terminal power as the sum of shaft power and rate of change of stored energy, we may deduce that torque is given by:

$$T = \frac{q}{2} p\left(\lambda_d I_q - \lambda_q I_d\right) \tag{12.2.16}$$

Note that we have stated a generalization to a q- phase machine even though the derivation given here was carried out for the $q = 3$ case. Of course three phase machines are by far the most common case. Machines with higher numbers of phases behave in the same way (and this generalization is valid for all purposes to which we put it), but there are more rotor variables analogous to "zero axis".

Now, noting that, in general, L_d and L_q are not necessarily equal,

$$\lambda_d = L_d I_d + \lambda_f \tag{12.2.17}$$

$$\lambda_q = L_q I_q \tag{12.2.18}$$

then torque is given by:

$$T = p\frac{q}{2}\left(\lambda_f + \left(L_d - L_q\right) I_d\right) I_q \tag{12.2.19}$$

Finding Torque Capability

For high performance drives, we will generally assume that the power supply, generally an inverter, can supply currents in the correct spatial relationship to the rotor to produce torque in some reasonably effective fashion. We will show in this section how to determine, given a required torque (or if the torque is limited by either voltage or current which we will discuss anon), what the values of I_d and I_q must be. Then the power supply, given some means of determining where the rotor is (the instantaneous value of θ), will use the inverse Park's transformation to determine the instantaneous valued required for phase currents. This is the essence of what is known as "field oriented control", or putting stator currents in the correct location in space to produce the required torque.

Our objective in this section is, given the elementary parameters of the motor, find the capability of the motor to produce torque. There are three things to consider here:

- Armature current is limited, generally by heating,
- A second limit is the voltage capability of the supply, particularly at high speed, and
- If the machine is operating within these two limits, we should consider the optimal placement of currents (that is, how to get the most torque per unit of current to minimize losses).

Often the discussion of current placement is carried out using, as a tool to visualize what is going on, the I_d, I_q plane. Operation in the steady state implies a single point on this plane. A simple illustration is shown in Figure 7. The thermally limited armature current capability is represented as a circle around the origin, since the magnitude of armature current is just the length of a vector from the origin in this space. Note that since in general, for permanent magnet machines with

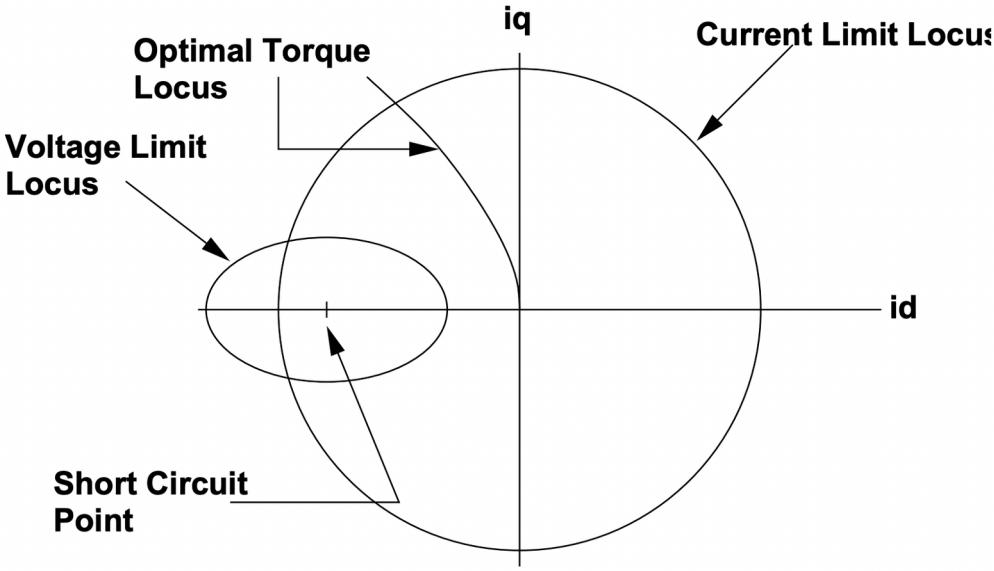

Figure 7: Limits to Operation

buried magnets, \(\ L_{d}

Finally, an ellipse describes the voltage limit. To start, consider what would happen if the terminals of the machine were to be short-circuited so that $V = 0$. If the machine is operating at sufficiently high speed so that armature resistance is negligible, armature current would be simply:

$$I_d = -\frac{\lambda_f}{L_d}$$
$$I_q = 0$$

Now, loci of constant flux turn out to be ellipses around this point on the plane. Since terminal flux is proportional to voltage and inversely proportional to frequency, if the machine is operating with a given terminal voltage, the ability of that voltage to command current in the I_d, I_q plane is an ellipse whose size “shrinks” as speed increases.

To simplify the mathematics involved in this estimation, we normalize reactances, fluxes, currents and torques. First, let us define the base flux to be simply $\lambda_b = \lambda_f$ and the base current I_b to be the armature capability. Then we define two per-unit reactances:

$$x_d = \frac{L_d I_b}{\lambda_b} \tag{12.2.20}$$

$$x_q = \frac{L_q I_b}{\lambda_b} \tag{12.2.21}$$

Next, define the base torque to be:

$$T_b = p\frac{q}{2}\lambda_b I_b$$

and then, given per-unit currents i_d and i_q, the per-unit torque is simply:

$$t_e = \left(1 - \left(x_q - x_d\right) i_d\right) i_q \tag{12.2.22}$$

It is fairly straightforward (but a bit tedious) to show that the locus of current-optimal operation (that is, the largest torque for a given current magnitude or the smallest current magnitude for a given torque) is along the curve:

$$i_d = -\sqrt{\frac{i_a^2}{2} + 2\left(\frac{1}{4\left(x_q - x_d\right)}\right)^2 - \frac{1}{2\left(x_q - x_d\right)}\sqrt{\left(\frac{1}{4\left(x_q - x_d\right)}\right)^2 + \frac{i_a^2}{2}}} \tag{12.2.23}$$

$$i_q = -\sqrt{\frac{i_a^2}{2} - 2\left(\frac{1}{4\left(x_q - x_d\right)}\right)^2 + \frac{1}{2\left(x_q - x_d\right)}\sqrt{\left(\frac{1}{4\left(x_q - x_d\right)}\right)^2 + \frac{i_a^2}{2}}} \tag{12.2.24}$$

The “rating point” will be the point along this curve when $i_a = 1$, or where this curve crosses the armature capability circle in the $i_d,\ i_q$ plane. It should be noted that this set of expressions only works for salient machines. For non-salient machines, of course, torque-optimal current is on the q-axis. In general, for machines with saliency, the “per-unit” torque will not be unity at the rating, so that the rated, or “Base Speed” torque is not the “Base” torque, but:

$$T_r = T_b \times t_e \tag{12.2.25}$$

where t_e is calculated at the rating point (that is, $i_a = 1$ and i_d and i_q as per (23) and (24)).

For sufficiently low speeds, the power electronic drive can command the optimal current to produce torque up to rated. However, for speeds higher than the “Base Speed”, this is no longer true. Define a per-unit terminal flux:

$$\psi = \frac{V}{\omega\lambda_b}$$

Operation at a given flux magnitude implies:

$$\psi^2 = \left(1 + x_d i_d\right)^2 + \left(x_q i_q\right)^2$$

which is an ellipse in the $i_d,\ i_q$ plane. The Base Speed is that speed at which this ellipse crosses the point where the optimal current curve crosses the armature capability. Operation at the highest attainable torque (for a given speed) generally implies d-axis currents that are higher than those on the optimal current locus. What is happening here is the (negative) d-axis current serves to reduce effective machine flux and hence voltage which is limiting q-axis current. Thus operation above the base speed is often referred to as “flux weakening”.

The strategy for picking the correct trajectory for current in the $i_d,\ i_q$ plane depends on the value of the per-unit reactance x_d. For values of $x_d > 1$, it is possible to produce some torque at any speed. For values of $x_d < 1$, there is a speed for which no point in the armature current capability is within the voltage limiting ellipse, so that useful torque has gone to zero. Generally, the maximum torque operating point is the intersection of the armature current limit and the voltage limiting ellipse:

$$i_d = \frac{x_d}{x_q^2 - x_d^2} - \sqrt{\left(\frac{x_d}{x_q^2 - x_d^2}\right)^2 + \frac{x_q^2 - \psi^2 + 1}{x_q^2 - x_d^2}} \tag{12.2.26}$$

$$i_q = \sqrt{1 - i_d^2} \tag{12.2.27}$$

Table 1: Example Machine

D- Axis Inductance	2.53 mHy
Q- Axis Inductance	6.38 mHy
Internal Flux	58.1 mWb
Armature Current	30 A

Table 2: Operating Characteristics of Example Machine

Per-Unit D-Axis Current At Rating Point	i_d	-.5924
Per-Unit Q-Axis Current At Rating Point	i_q	.8056
Per-Unit D-Axis Reactance	x_d	1.306
Per-Unit Q-Axis Reactance	x_q	3.294
Rated Torque (Nm)	T_r	9.17
Terminal Voltage at Base Point (V)		97

It may be that there is no intersection between the armature capability and the voltage limiting ellipse. If this is the case and if $x_d < 1$, torque capability at the given speed is zero.

If, on the other hand, $x_d > 1$, it may be that the intersection between the voltage limiting ellipse and the armature current limit is not the maximum torque point. To find out, we calculate the maximum torque point on the voltage limiting ellipse. This is done in the usual way by differentiating torque with respect to i_d while holding the relationship between i_d and i_q to be on the ellipse. The algebra is a bit messy, and results in:

$$i_d = -\frac{3x_d\left(x_q - x_d\right) - x_d^2}{4x_d^2\left(x_q - x_d\right)} - \sqrt{\left(\frac{3x_d\left(x_q - x_d\right) - x_d^2}{4x_d^2\left(x_q - x_d\right)}\right)^2 + \frac{\left(x_q - x_d\right)\left(\psi^2 - 1\right) + x_d}{2\left(x_q - x_d\right)x_d^2}} \tag{12.2.28}$$

$$i_q = \frac{1}{x_q}\sqrt{\psi^2 - \left(1 + x_d i_d\right)^2} \tag{12.2.29}$$

Ordinarily, it is probably easiest to compute (28) and (29) first, then test to see if the currents are outside the armature capability, and if they are, use (26) and (27).

These expressions give us the capability to estimate the torque-speed curve for a machine. As an example, the machine described by the parameters cited in Table 1 is a (nominal) 3 HP, 4-pole, 3000 RPM machine.

The rated operating point turns out to have the following attributes:

The loci of operation in the I_d, I_q plane is shown in Figure 8. The armature current limit is shown only in the second and third quadrants, so shows up as a semicircle. The two ellipses correspond with the rated point (the larger ellipse) and with a speed that is three times rated (9000 RPM). The torque-optimal current locus can be seen running from the origin to the rating point, and the higher speed operating locus follows the armature current limit. Figure 9 shows the torque/speed and power/speed curves. Note that this sort of machine only approximates “constant power” operation at speeds above the “base” or rating point speed.

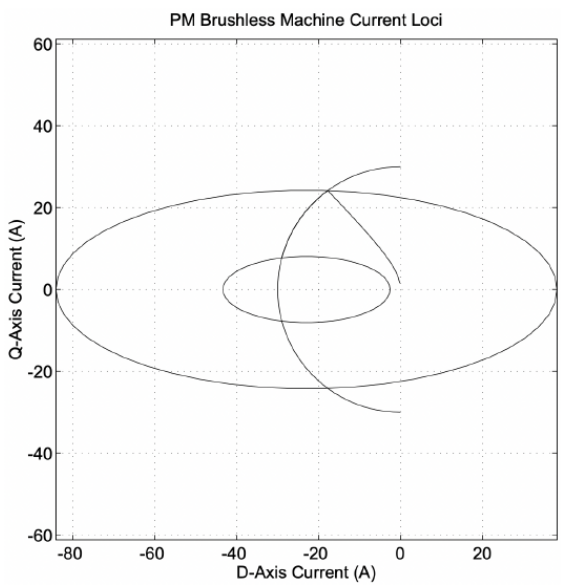

Figure 8: Operating Current Loci of Example Machine

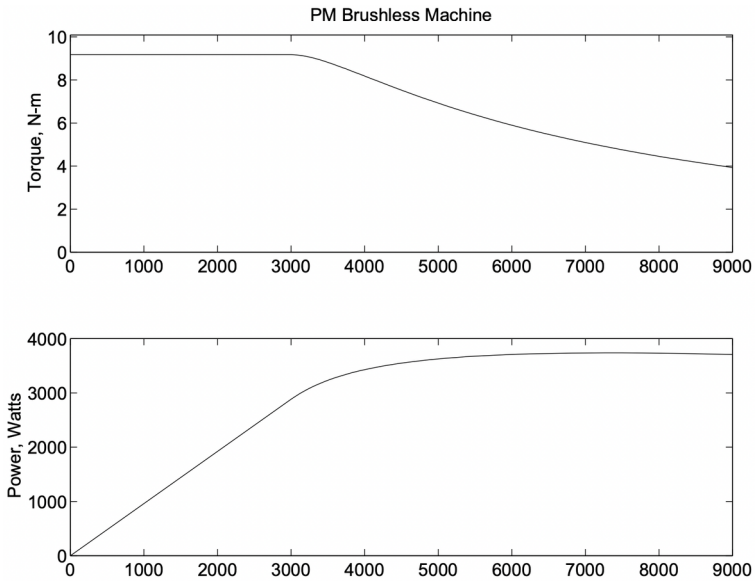

Figure 9: Torque- and Power-Speed Capability

This page titled 12.2: Zeroth Order Rating is shared under a CC BY-NC-SA 4.0 license and was authored, remixed, and/or curated by James Kirtley (MIT OpenCourseWare) via source content that was edited to the style and standards of the LibreTexts platform.

12.3: Parameter Estimation

We are now at the point of estimating the major parameters of the motors. Because we have a number of different motor geometries to consider, but because they share parameters in not too orderly a fashion, this section will have a number of sub-parts. First, we calculate flux linkage, then reactance.

Flux Linkage

Given a machine which may be considered to be uniform in the axial direction, flux linked by a single, full-pitched coil which spans an angle from zero to π/p, is:

$$\phi = \int_0^{\frac{\pi}{p}} B_r R l d\phi$$

where B_r is the radial flux through the coil. And, if Br is sinusoidally distributed this will have a peak value of

$$\phi_p = \frac{2RlB_r}{p}$$

Now, if the actual winding has N_a turns, and using the pitch and breadth factors derived in Appendix 1, the total flux linked is simply:

$$\lambda_f = \frac{2RlB_1N_ak_w}{p} \tag{12.3.1}$$

where

$$\begin{aligned} k_w &= k_pk_b \\ k_p &= \sin\frac{\alpha}{2} \\ k_b &= \frac{\sin m\frac{\gamma}{2}}{m\sin\frac{\gamma}{2}} \end{aligned}$$

The angle α is the pitch angle,

$$\alpha = 2\pi p\frac{N_p}{N_s}$$

where N_p is the coil span (in slots) and N_s is the total number of slots in the stator. The angle γ is the slot electrical angle:

$$\gamma = \frac{2\pi p}{N_s}$$

Now, what remains to be found is the space fundamental magnetic flux density B_1. In the third appendix it is shown that, for magnets in a surface-mount geometry, the magnetic field at the surface of the magnetic gap is:

$$B_1 = \mu_0M_1k_g \tag{12.3.2}$$

where the space-fundamental magnetization is:

$$M_1 = \frac{B_r}{\mu_0}\frac{4}{\pi}\sin\frac{p\theta_m}{2}$$

where B_r is remanent flux density of the permanent magnets and θ_m is the magnet angle.

and where the factor that describes the geometry of the magnetic gap depends on the case. For magnets inside and $p \neq 1$,

$$k_g = \frac{R_s^{p-1}}{R_s^{2p}-R_i^{2p}}\left(\frac{p}{p+1}\left(R_2^{p+1}-R_1^{p+1}\right)+\frac{p}{p-1}R_i^{2p}\left(R_1^{1-p}-R_2^{1-p}\right)\right)$$

For magnets inside and $p = 1$,

$$k_g = \frac{1}{R_s^2 - R_i^2}\left(\frac{1}{2}\left(R_2^2 - R_1^2\right) + R_i^2 \log\frac{R_2}{R_1}\right)$$

For the case of magnets outside and $p \neq 1$:

$$k_g = \frac{R_i^{p-1}}{R_s^{2p} - R_i^{2p}}\left(\frac{p}{p+1}\left(R_2^{p+1} - R_1^{p+1}\right) + \frac{p}{p-1}R_s^{2p}\left(R_1^{1-p} - R_2^{1-p}\right)\right)$$

and for magnets outside and $p = 1$,

$$k_g = \frac{1}{R_s^2 - R_i^2}\left(\frac{1}{2}\left(R_2^2 - R_1^2\right) + R_s^2 \log\frac{R_2}{R_1}\right)$$

Where R_s and R_i are the outer and inner magnetic boundaries, respectively, and R_2 and R_1 are the outer and inner boundaries of the magnets.

Note that for the case of a small gap, in which both the physical gap g and the magnet thickness h_m are both much less than rotor radius, it is straightforward to show that all of the above expressions approach what one would calculate using a simple, one-dimensional model for the permanent magnet:

$$k_g \to \frac{h_m}{g + h_m}$$

This is the whole story for the winding-in-slot, narrow air-gap, surface magnet machine. For airgap armature windings, it is necessary to take into account the radial dependence of the magnetic field.

Air-Gap Armature Windings

With no windings in slots, the conventional definition of winding factor becomes difficult to apply. If, however, each of the phase belts of the winding occupies an angular extent θ_w, then the equivalent to (31) is:

$$k_w = \frac{\sin p\frac{\theta_w}{2}}{p\frac{\theta_w}{2}}$$

Next, assume that the "density" of conductors within each of the phase belts of the armature winding is uniform, so that the density of turns as a function of radius is:

$$N(r) = \frac{2N_a r}{R_{wo}^2 - R_{wi}^2}$$

This just expresses the fact that there is more azimuthal room at larger radii, so with uniform density the number of turns as a function of radius is linearly dependent on radius. Here, R_{wo} and R_{wi} are the outer and inner radii, respectively, of the winding.

Now it is possible to compute the flux linked due to a magnetic field distribution:

$$\lambda_f = \int_{R_{wi}}^{R_{wo}} \frac{2lN_a k_w r}{p} \frac{2r}{R_{wo}^2 - R_{wi}^2} \mu_0 H_r(r) dr$$

Note the form of the magnetic field as a function of radius expressed in 80 and 81 of the second appendix. For the "winding outside" case it is:

$$H_r = A\left(r^{p-1} + R_s^{2p} r^{-p-1}\right)$$

Then a winding with all its turns concentrated at the outer radius $r = R_{wo}$ would link flux:

$$\lambda_c = \frac{2lR_{wo}k_w}{p}\mu_0 H_r\left(R_{wo}\right) = \frac{2lR_{wo}k_w}{p}\mu_0 A\left(R_{wo}^{p-1} + R_s^{2p} R_{wo}^{-p-1}\right)$$

Carrying out (32), it is possible, then, to express the flux linked by a thick winding to the flux that would have been linked by a radially concentrated winding at its outer surface by:

$$k_t = \frac{\lambda_f}{\lambda_c}$$

where, for the winding outside, $p \neq 2$ case:

$$k_t = \frac{2}{(1-x^2)(1+\xi^{2p})}\left(\frac{(1-x^{2+p})\xi^{2p}}{2+p} + \frac{1-x^{2-p}}{2-p}\right) \tag{12.3.3}$$

where we have used the definitions $\xi = R_{wo}/R_s$ and $x = R_{wi}/R_{wo}$. In the case of winding outside, $p = 2$,

$$k_t = \frac{2}{(1-x^2)(1+\xi^{2p})}\left(\frac{(1-x^4)\xi^4}{4} - \log x\right) \tag{12.3.4}$$

In a very similar way, we can define a winding factor for a thick winding in which the reference radius is at the inner surface. (Note: this is done because the inner surface of the inside winding is likely to be coincident with the inner ferromagnetic surface, as the outer surface of the outer winding ls likely to be coincident with the outer ferromagnetic surface). For $p \neq 2$:

$$k_t = \frac{2x^{-p}}{(1-x^2)(1+\eta^{2p})}\left(\frac{1-x^{2+p}}{2+p} + (\eta x)^{2p}\frac{1-x^{2-p}}{2-p}\right) \tag{12.3.5}$$

and for $p = 2$:

$$k_t = \frac{2x^{-2}}{(1-x^2)(1+\eta^{2p})}\left(\frac{1-x^4}{4} - (\eta x)^4 \log x\right) \tag{12.3.6}$$

where $\eta = R_i/R_{wi}$

So, in summary, the flux linked by an air-gap armature is given by:

$$\lambda_f = \frac{2RlB_1N_ak_wk_t}{p} \tag{12.3.7}$$

where B_1 is the flux density at the outer radius of the physical winding (for outside winding machines) or at the inner radius of the physical winding (for inside winding machines). Note that the additional factor k_t is a bit more than one (it approaches unity for thin windings), so that, for small pole numbers and windings that are not too thick, it is almost correct and in any case "conservative" to take it to be one.

Interior Magnet Motors

For the flux concentrating machine, it is possible to estimate air-gap flux density using a simple reluctance model.

The air- gap permeance of one pole piece is:

$$\wp_{ag} = \mu_0 l \frac{R\theta_p}{g}$$

where θ_p is the angular width of the pole piece.

And the incremental permeance of a magnet is:

$$\wp_m = \mu_0 \frac{h_m l}{w_m}$$

The magnet sees a unit permeance consisting of its own permeance in series with one half of each of two pole pieces (in series):

$$\wp_u = \frac{\wp_{ag}}{\wp_m} = \frac{R\theta_p}{4g}\frac{w_m}{h_m}$$

Magnetic flux density in the magnet is:

$$B_m = B_0 \frac{\wp_u}{1+\wp_u}$$

And then flux density in the air gap is:

$$B_g = \frac{2h_m}{R\theta_p}B_m = B_0 \frac{2h_m w_m}{4gh_m + R\theta_p w_m}$$

The space fundamental of that can be written as:

$$B_1 = \frac{4}{\pi} \sin \frac{p\theta_p}{2} B_0 \frac{w_m}{2g} \gamma_m$$

where we have introduced the shorthand:

$$\gamma_m = \frac{1}{1 + \frac{w_m}{g} \frac{\theta_p}{4} \frac{R}{h_m}}$$

The flux linkage is then computed as before:

$$\lambda_f = \frac{2RlB_1 N_a k_w}{p} \tag{12.3.8}$$

Winding Inductances

The next important set of parameters to compute are the d- and q- axis inductances of the machine. We will consider three separate cases, the winding-in-slot, surface magnet case, which is magnetically "round", or non-salient, the air-gap winding case, and the flux concentrating case which is salient, or has different direct- and quadrature- axis inductances.

Surface Magnets, Windings in Slots

In this configuration there is no saliency, so that $L_d = L_q$. There are two principal parts to inductance, the air-gap inductance and slot leakage inductance. Other components, including end turn leakage, may be important in some configurations, and they would be computed in the same way as for an induction machine. As is shown in the first Appendix, the fundamental part of air-gap inductance is:

$$L_{d1} = \frac{q}{2} \frac{4}{\pi} \frac{\mu_0 N_a^2 k_w^2 l R_s}{p^2 (g + h_w)} \tag{12.3.9}$$

Here, g is the magnetic gap, including the physical rotational gap and any magnet retaining means that might be used. h_m is the magnet thickness.

Since the magnet thickness is included in the air-gap, the air-gap permeance may not be very large, so that slot leakage inductance may be important. To estimate this, assume that the slot shape is rectangular, characterized by the following dimensions:

h_s height of the main portion of the slot

w_s width of the top of the main portion of the slot

h_d height of the slot depression

w_d slot depression opening

Of course not all slots are rectangular: in fact in most machines the slots are trapezoidal in shape to maintain teeth cross-sections that are radially uniform. However, only a very small error (a few percent) is incurred in calculating slot permeance if the slot is assumed to be rectangular and the top width is used (that is the width closest to the air-gap). Then the slot permeance is, per unit length:

$$\mathcal{P} = \mu_0 \left(\frac{1}{3} \frac{h_s}{w_s} + \frac{h_d}{w_d} \right)$$

Assume for the rest of this discussion a standard winding, with m slots in each phase belt (this assumes, then, that the total number of slots is $N_s = 2pqm$), and each slot holds two halfcoils. (A half-coil is one side of a coil which, of course, is wound in two slots). If each coil has N_c turns (meaning $N_a = 2pmN_c$), then the contribution to phase self-inductance of one slot is, if both half-coils are from the same phase, $4l\mathcal{P}N_c^2$. If the half-coils are from different phases, then the contribution to self inductance is $l\mathcal{P}N_c^2$ and the magnitude of the contribution to mutual inductance is $l\mathcal{P}N_c^2$. (Some caution is required here. For three phase windings the mutual inductance is negative, so are the senses of the currents in the two other phases, so the impact of "mutual leakage" is to increase the reactance. This will be true for other numbers of phases as well, even if the algebraic sign of the

mutual leakage inductance is positive, in which case so will be the sense of the other- phase current.)

We will make two other assumptions here. The standard one is that the winding "coil throw", or span between sides of a coil, is $\frac{N_s}{2p} - N_{sp}$. N_{sp} is the coil "short pitch". The other is that each phase belt will overlap with, at most two other phases: the ones on either side in sequence. This last assumption is immediately true for three- phase windings (because there are only two other phases. It is also likely to be true for any reasonable number of phases.

Noting that each phase occupies $2p\left(m - N_{sp}\right)$ slots with both coil halves in the same slot and $4pN_{sp}$ slots in which one coil half shares a slot with a different phase, we can write down the two components of slot leakage inductance, self- and mutual:

$$\begin{aligned} L_{as} &= 2pl\left[\left(m - N_{sp}\right)\left(2N_c\right)^2 + 2N_{sp}N_c^2\right] \\ L_{am} &= 2plN_{sp}N_c^2 \end{aligned}$$

For a three- phase machine, then, the total slot leakage inductance is:

$$L_a = L_{as} + L_{am} = 2pl\mathcal{P}N_c^2\left(4m - N_{sp}\right)$$

For a uniform, symmetric winding with an odd number of phases, it is possible to show that the effective slot leakage inductance is:

$$L_a = L_{as} - 2L_{am}\cos\tfrac{2\pi}{q}$$

Total synchronous inductance is the sum of air-gap and leakage components: so far this is:

$$L_d = L_{d1} + L_a$$

Air-Gap Armature Windings

It is shown in Appendix 2 that the inductance of a single-phase of an air-gap winding is:

$$L_a = \textstyle\sum_n L_{np}$$

where the harmonic components are:

$$\begin{aligned} L_k =& \frac{8}{\pi}\frac{\mu_0 l k_{wn}^2 N_a^2}{k\left(1 - x^2\right)^2}\left[\frac{\left(1 - x^{2-k}\gamma^{2k}\right)\left(1 - x^{2+k}\right)}{\left(4 - k^2\right)\left(1 - \gamma^{2k}\right)}\right. \\ &+ \frac{\xi^{2k}\left(1 - x^{k+2}\right)^2}{(2+k)^2\left(1 - \gamma^{2k}\right)} + \frac{\xi^{-2k}\left(1 - x^{2-k}\right)^2}{(2-k)^2\left(\gamma^{-2k} - 1\right)} \\ &\left.+ \frac{\left(1 - \gamma^{-2k}x^{2+k}\right)\left(1 - x^{2-k}\right)}{\left(4 - k^2\right)\left(\gamma^{-2k} - 1\right)} - \frac{k}{4 - k^2}\frac{1 - x^2}{2}\right] \end{aligned}$$

where we have used the following shorthand coefficients:

$$\begin{aligned} x &= \frac{R_{wi}}{R_{wo}} \\ \gamma &= \frac{R_i}{R_s} \\ \xi &= \frac{R_{wo}}{R_s} \end{aligned}$$

This fits into the conventional inductance framework:

$$L_n = \tfrac{4}{\pi}\tfrac{\mu_0 N_a^2 R_s L k_{wn}^2}{N^2 p^2 g} k_a$$

if we assign the "thick armature" coefficient to be:

$$k_a = \frac{2gk}{R_{wo}} \frac{1}{\left(1-x^2\right)^2} \left[\frac{\left(1-x^{2-k}\gamma^{2k}\right)\left(1-x^{2+k}\right)}{\left(4-k^2\right)\left(1-\gamma^{2k}\right)} + \frac{\xi^{2k}\left(1-x^{k+2}\right)^2}{(2+k)^2\left(1-\gamma^{2k}\right)} + \frac{\xi^{-2k}\left(1-x^{2-k}\right)^2}{(2-k)^2\left(\gamma^{-2k}-1\right)} + \frac{\left(1-\gamma^{-2k}x^{2+k}\right)\left(1-x^{2-k}\right)}{\left(4-k^2\right)\left(\gamma^{-2k}-1\right)} - \frac{k}{4-k^2}\frac{1-x^2}{2} \right]$$

and $k = np$ and $g = R_s - R_i$ is the conventionally defined “air gap”. If the aspect ratio R_i/R_s is not too far from unity, neither is k_a. In the case of $p = 2$, the fundamental component of k_a is:

$$k_a = \frac{2gk}{R_{wo}} \frac{1}{\left(1-x^2\right)^2} \left[\frac{1-x^4}{8} - \frac{2\gamma^4 + x^4\left(1-\gamma^4\right)}{4\left(1-\gamma^4\right)} \log x + \frac{\gamma^4}{\xi^4\left(1-\gamma^4\right)} (\log x)^2 + \frac{\xi^4\left(1-x^4\right)^2}{16\left(1-\gamma^4\right)} \right]$$

For a q-phase winding, a good approximation to the inductance is given by just the first space harmonic term, or:

$$L_d = \frac{q}{2}\frac{4}{\pi}\frac{\mu_0 N_a^2 R_s L k_{wn}^2}{n^2 p^2 g} k_a$$

Internal Magnet Motor

The permanent magnets will have an effect on reactance because the magnets are in the main flux path of the armature. Further, they affect direct and quadrature reactances differently, so that the machine will be salient. Actually, the effect on the direct axis will likely be greater, so that this type of machine will exhibit “negative” saliency: the quadrature axis reactance will be larger than the direct- axis reactance.

A full- pitch coil aligned with the direct axis of the machine would produce flux density:

$$B_r = \frac{\mu_0 N_a I}{2g\left(1 + \frac{R\theta_p}{4g}\frac{w_m}{h_m}\right)}$$

Note that only the pole area is carrying useful flux, so that the space fundamental of radial flux density is:

$$B_1 = \frac{\mu_0 N_a I}{2g}\frac{4}{\pi}\frac{\sin\frac{p\theta_m}{2}}{1 + \frac{w_m}{h_m}\frac{R\theta_p}{4g}}$$

Then, since the flux linked by the winding is:

$$\lambda_a = \frac{2RlN_a k_w B_1}{p}$$

The d- axis inductance, including mutual phase coupling, is (for a q- phase machine):

$$L_d = \frac{q}{2}\frac{4}{\pi}\frac{\mu_0 N_a^2 R l k_w^2}{p^2 g}\gamma_m \sin\frac{p\theta_p}{2}$$

The quadrature axis is quite different. On that axis, the armature does not tend to push flux through the magnets, so they have only a minor effect. What effect they do have is due to the fact that the magnets produce a space in the active air- gap. Thus, while a full- pitch coil aligned with the quadrature axis will produce an air- gap flux density:

$$B_r = \frac{\mu_0 N I}{g}$$

the space fundamental of that will be:

$$B_1 = \frac{\mu_0 N I}{g}\frac{4}{\pi}\left(1 - \sin\frac{p\theta_t}{2}\right)$$

where θ_t is the angular width taken out of the pole by the magnets.

So that the expression for quadrature axis inductance is:

$$L_q = \frac{q}{2}\frac{4}{\pi}\frac{\mu_0 N_a^2 R l k_w^2}{p^2 g}\left(1 - \sin\frac{p\theta_t}{2}\right)$$

This page titled 12.3: Parameter Estimation is shared under a CC BY-NC-SA 4.0 license and was authored, remixed, and/or curated by James Kirtley (MIT OpenCourseWare) via source content that was edited to the style and standards of the LibreTexts platform.

12.4: Current Rating and Resistance

The last part of machine rating is its current capability. This is heavily influenced by cooling methods, for the principal limit on current is the heating produced by resistive dissipation. Generally, it is possible to do first-order design estimates by assuming a current density that can be handled by a particular cooling scheme. Then, in an air-gap winding:

$$N_a I_a = \left(R_{wo}^2 - R_{wi}^2\right) \frac{\theta_{we}}{2} J_a$$

and note that, usually, the armature fills the azimuthal space in the machine:

$$2q\theta_{we} = 2\pi$$

For a winding in slots, nearly the same thing is true: if the rectangular slot model holds true:

$$2qN_a I_a = N_s h_s w_s J_s$$

where we are using J_s to note slot current density. Now, suppose we can characterize the total slot area by a "space factor" λ_s which is the ratio between total slot area and the annulus occupied by the slots: for the rectangular slot model:

$$\lambda_s = \frac{N_s h_s w_s}{\pi\left(R_{wo}^2 - R_{wi}^2\right)}$$

where $R_{wi} = R + h_d$ and $R_{wo} = R_{wi} + h_s$ in a normal, stator outside winding. In this case, $J_a = J_s \lambda_s$ and the two types of machines can be evaluated in the same way.

It would seem apparent that one would want to make λ_s as large as possible, to permit high currents. The limit on this is that the magnetic teeth between the conductors must be able to carry the air-gap flux, and making them too narrow would cause them to saturate. The peak of the time fundamental magnetic field in the teeth is, for example,

$$B_t = B_1 \frac{2\pi R}{N_s w_t}$$

where w_t is the width of a stator tooth:

$$w_t = \frac{2\pi(R + h_d)}{N_s} - w_s$$

so that

$$B_t \approx \frac{B_1}{1 - \lambda_s}$$

Resistance

Winding resistance may be estimated as the length of the stator conductor divided by its area and its conductivity. The length of the stator conductor is:

$$l_c = 2lN_a f_e$$

where the "end winding factor" f_e is used to take into account the extra length of the end turns (which is usually not negligible). The area of each turn of wire is, for an air-gap winding:

$$A_w = \frac{\theta_{we}}{2} \frac{R_{wo}^2 - R_{wi}^2}{N_a} \lambda_w$$

where λ_w, the "packing factor" relates the area of conductor to the total area of the winding. The resistance is then just:

$$R_a = \frac{4lN_a^2}{\theta_{we}\left(R_{wo}^2 - R_{wi}^2\right)\lambda_w \sigma}$$

and, of course, σ is the conductivity of the conductor.

For windings in slots the expression is almost the same, simply substituting the total slot area:

$$R_a = \frac{2qlN_a^2}{N_s h_s w_s \lambda_w \sigma}$$

The end turn allowance depends strongly on how the machine is made. One way of estimating what it might be is to assume that the end turns follow a roughly circular path from one side of the machine to the other. The radius of this circle would be, very roughly, R_w/p, where is the average radius of the winding: $R_w \approx (R_{wo} + R_{wi})/2$

Then the end-turn allowance would be:

$$f_e = 1 + \frac{\pi R_w}{pl}$$

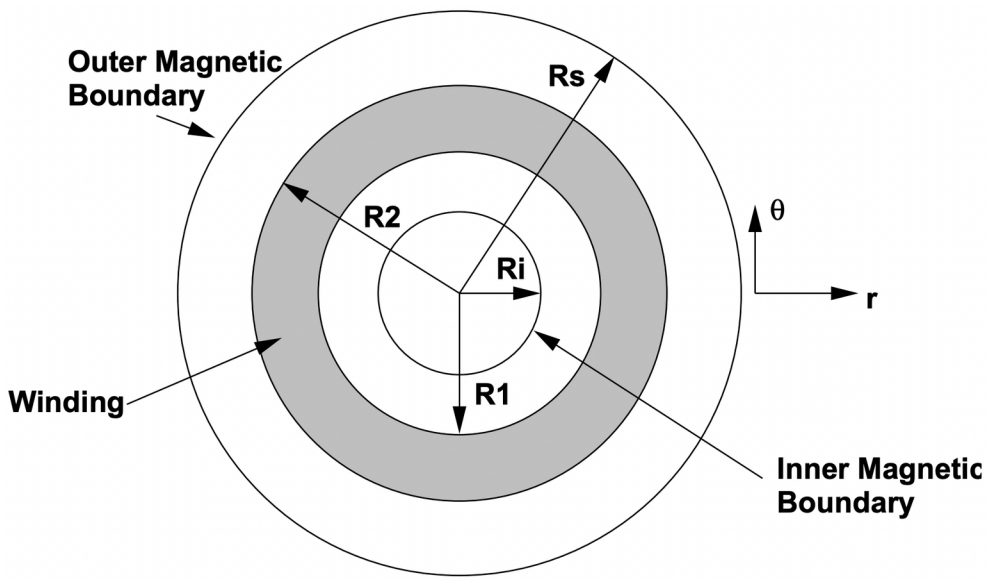

Figure 10: Coordinate System for Inductance Calculation

This page titled 12.4: Current Rating and Resistance is shared under a CC BY-NC-SA 4.0 license and was authored, remixed, and/or curated by James Kirtley (MIT OpenCourseWare) via source content that was edited to the style and standards of the LibreTexts platform.

12.5: Appendix 1- Air-Gap Winding Inductance

In this appendix we use a simple two-dimensional model to estimate the magnetic fields and then inductances of an air-gap winding. The principal limiting assumption here is that the winding is uniform in the zˆ direction, which means it is long in comparison with its radii. This is generally not true, nevertheless the answers we will get are not too far from being correct. The style of analysis used here can be carried into a three-dimensional, or quasi-three dimensional domain to get much more precise answers, at the expense of a very substantial increase in complexity.

The coordinate system to be used is shown in Figure 10. To maintain generality we have four radii: R_i and R_s are ferromagnetic boundaries, and would of course correspond with the machine shaft and the stator core. The winding itself is carried between radii R_1 and R_2, which correspond with radii R_{wi} and R_{wo} in the body of the text. It is assumed that the armature is carrying a current in the z- direction, and that this current is uniform in the radial dimension of the armature. If a single phase of the armature is carrying current, that current will be:

$$J_{z0} = \frac{N_a I_a}{\frac{\theta_{we}}{2}(R_2^2 - R_1^2)}$$

over the annular wedge occupied by the phase. The resulting distribution can be fourier analyzed, and the n-th harmonic component of this will be (assuming the coordinate system has been chosen appropriately):

$$J_{zn} = \frac{4}{n\pi} J_{z0} \sin n\frac{\theta_{we}}{2} = \frac{4}{\pi}\frac{N_a I_a}{R_2^2 - R_1^2} k_{wn}$$

where the n-th harmonic winding factor is:

$$k_{wn} = \frac{\sin n\frac{\theta_{we}}{2}}{n\frac{\theta_{we}}{2}}$$

and note that θ_{we} is the electrical winding angle:

$$\theta_{we} = p\theta_w$$

Now, it is easiest to approach this problem using a vector potential. Since the divergence of flux density is zero, it is possible to let the magnetic flux density be represented by the curl of a vector potential:

$$\bar{B} = \nabla \times \bar{A}$$

Taking the curl of that:

$$\nabla \times (\nabla \times \bar{A}) = \mu_0 \bar{J} = \nabla\nabla \cdot \bar{A} - \nabla^2 \bar{A}$$

and using the coulomb gage

$$\nabla \cdot \bar{A} = 0$$

we have a reasonable tractable partial differential equation in the vector potential:

$$\nabla^2 \bar{A} = -\mu_0 \bar{J}$$

Now, since in our assumption there is only a z- directed component of $\bar{J}$, we can use that one component, and in circular cylindrical coordinates that is:

$$\frac{1}{r}\frac{\partial}{\partial r} r \frac{\partial A_z}{\partial r} + \frac{1}{r^2}\frac{\partial^2}{\partial \theta^2} A_z = -\mu_0 J_z$$

For this problem, all variables will be varying sinusoidally with angle, so we will assume that angular dependence $e^{jk\theta}$. Thus:

$$\frac{1}{r}\frac{\partial}{\partial r} r \frac{\partial A_z}{\partial r} - \frac{k^2}{r^2} A_z = -\mu_0 J_z \tag{12.5.1}$$

This is a three-region problem. Note the regions as:

\(\ \begin{array}{ll}
\mathrm{i} & R_{i} \mathrm{w} & R_{1} \text { o } & R_{2} \end{array}\)

For i and o, the current density is zero and an appropriate solution to (40) is:

$$A_z = A_+ r^k + A_- r^{-k}$$

In the region of the winding, w, a particular solution must be used in addition to the homogeneous solution, and

$$A_z = A_+ r^k + A_- r^{-k} + A_p$$

where, for $k \neq 2$,

$$A_p = -\frac{\mu_0 J_z r^2}{4-k^2}$$

or, if $k = 2$,

$$A_p = -\frac{\mu_0 J_z r^2}{4}\left(\log r - \frac{1}{4}\right)$$

And, of course, the two pertinent components of the magnetic flux density are:

$$B_r = \frac{1}{r}\frac{\partial A_z}{\partial \theta}$$
$$B_\theta = -\frac{\partial A_z}{\partial r}$$

Next, it is necessary to match boundary conditions. There are six free variables and correspondingly there must be six of these boundary conditions. They are the following:

- At the inner and outer magnetic boundaries, $r = R_i$ and $r = R_s$, the azimuthal magnetic field must vanish.
- At the inner and outer radii of the winding itself, $r = R_1$ and $r = R_2$, both radial and azimuthal magnetic field must be continuous.

These conditions may be summarized by:

$$\begin{aligned}
kA_+^i R_i^{k-1} - kA_-^i R_i^{-k-1} &= 0 \\
kA_+^o R_s^{k-1} - kA_-^o R_s^{-k-1} &= 0 \\
A_+^w R_2^{k-1} + A_-^w R_2^{-k-1} - \frac{\mu_0 J_z R_2}{4-k^2} &= A_+^o R_2^{k-1} + A_-^o R_2^{-k-1} \\
-kA_+^w R_2^{k-1} + kA_-^w R_2^{-k-1} + \frac{2\mu_0 J_z R_2}{4-k^2} &= -kA_+^o R_2^{k-1} + kA_-^o R_2^{-k-1} \\
A_+^w R_1^{k-1} + A_-^w R_1^{-k-1} - \frac{\mu_0 J_z R_1}{4-k^2} &= A_+^i R_1^{k-1} + A_-^i R_1^{-k-1} \\
-kA_+^w R_1^{k-1} + kA_-^w R_1^{-k-1} + \frac{2\mu_0 J_z R_1}{4-k^2} &= -kA_+^i R_1^{k-1} + kA_-^i R_1^{-k-1}
\end{aligned}$$

Note that we are carrying this out here only for the case of $k \neq 2$. The $k = 2$ case may be obtained by substituting its particular solution in at the beginning or by using L'Hopital's rule on the final solution. This set may be solved (it is a bit tedious but quite straightforward) to yield, for the winding region:

$$\begin{aligned}
A_z = &\frac{\mu_0 J_z}{2k}\left[\left(\frac{R_s^{2k}R_2^{2-k} - R_i^{2k}R_1^{2-k}}{(2-k)\left(R_s^{2k} - R_i^{2k}\right)} + \frac{R_2^{2+k} - R_1^{2+k}}{(2+k)\left(R_s^{2k} - R_i^{2k}\right)}\right) r^k \right. \\
&\left. + \left(\frac{R_2^{2-k} - R_1^{2-k}}{(2-k)\left(R_i^{-2k} - R_s^{-2k}\right)} + \frac{R_s^{-2k}R_2^{2+k} - R_i^{-2k}R_1^{2+k}}{(2+k)\left(R_i^{-2k} - R_s^{-2k}\right)}\right) r^{-k} - \frac{2k}{4-k^2} r^2\right]
\end{aligned}$$

Now, the inductance linked by any single, full-pitched loop of wire located with one side at azimuthal position θ and radius r is:

$$\lambda_i = 2lA_z(r, \theta)$$

To extend this to the whole winding, we integrate over the area of the winding the incremental flux linked by each element times

the turns density. This is, for the n-th harmonic of flux linked:

$$\lambda_n = \frac{4lk_{wn}N_a}{R_2^2 - R_1^2} \int_{R_1}^{R_2} A_z(r) r dr$$

Making the appropriate substitutions for current into the expression for vector potential, this becomes:

$$\begin{aligned}\lambda_n =& \frac{8}{\pi} \frac{\mu_0 l k_{wn}^2 N_a^2 I_a}{k\left(R_2^2 - R_1^2\right)^2} \left[\left(\frac{R_s^{2k} R_2^{2-k} - R_i^{2k} R_1^{2-k}}{(2-k)\left(R_s^{2k} - R_i^{2k}\right)} + \frac{R_2^{2+k} - R_1^{2+k}}{(2+k)\left(R_2^{2k} - R_i^{2k}\right)} \right) \frac{R_2^{k+2} - R_1^{k+2}}{k+2} \right. \\ & \left. + \left(\frac{R_2^{2-k} - R_1^{2-k}}{(2-k)\left(R_i^{-2k} - R_s^{-2k}\right)} + \frac{R_s^{-2k} R_2^{2+k} - R_i^{-2k} R_1^{2+k}}{(2+k)\left(R_i^{-2k} - R_s^{-2k}\right)} \right) \frac{R_2^{2-k} - R_1^{2-k}}{2-k} - \frac{2k}{4-k^2} \frac{R_2^4 - R_1^4}{4} \right]\end{aligned}$$

This page titled 12.5: Appendix 1- Air-Gap Winding Inductance is shared under a CC BY-NC-SA 4.0 license and was authored, remixed, and/or curated by James Kirtley (MIT OpenCourseWare) via source content that was edited to the style and standards of the LibreTexts platform.

12.6: Appendix 2- Permanent Magnet Field Analysis

This section is a a field analysis of the kind of radially magnetized, permanent magnet structures commonly used in electric machinery. It is a fairly general analysis, which will be suitable for use with either surface or in-slot windings, and for the magnet inside or the magnet outside case.

This is a two-dimensional layout suitable for situations in which field variation along the length of the structure is negligible.

This page titled 12.6: Appendix 2- Permanent Magnet Field Analysis is shared under a CC BY-NC-SA 4.0 license and was authored, remixed, and/or curated by James Kirtley (MIT OpenCourseWare) via source content that was edited to the style and standards of the LibreTexts platform.

12.7: Layout

The assumed geometry is shown in Figure 11. Assumed iron (highly permeable) boundaries are at radii R_i and R_s. The permanent magnets, assumed to be polarized radially and alternately (i.e. North-South ...), are located between radii R_1 and R_2. We assume there are p pole pairs ($2p$ magnets) and that each magnet subsumes an electrical angle of θ_{me}. The electrical angle is just p times the physical angle, so that if the magnet angle were $\theta_{me} = \pi$, the magnets would be touching.

If the magnets are arranged so that the radially polarized magnets are located around the azimuthal origin $(\theta = 0)$, the space fundamental of magnetization is:

$$\bar{M} = \bar{i}_r M_0 \cos p\theta \tag{41}$$

where the fundamental magnitude is:

$$M_0 = \frac{4}{\pi} \sin \frac{\theta_{me}}{2} \frac{B_{\text{rem}}}{\mu_0} \tag{42}$$

and B_{rem} is the remanent magnetization of the permanent magnet.

Since there is no current anywhere in this problem, it is convenient to treat magnetic field as the gradient of a scalar potential:

$$\bar{H} = -\nabla \psi \tag{43}$$

The divergence of this is:

$$\nabla^2 \psi = -\nabla \cdot \bar{H} \tag{44}$$

Since magnetic flux density is divergence-free,

$$\nabla \cdot \bar{B} = 0 \tag{45}$$

we have:

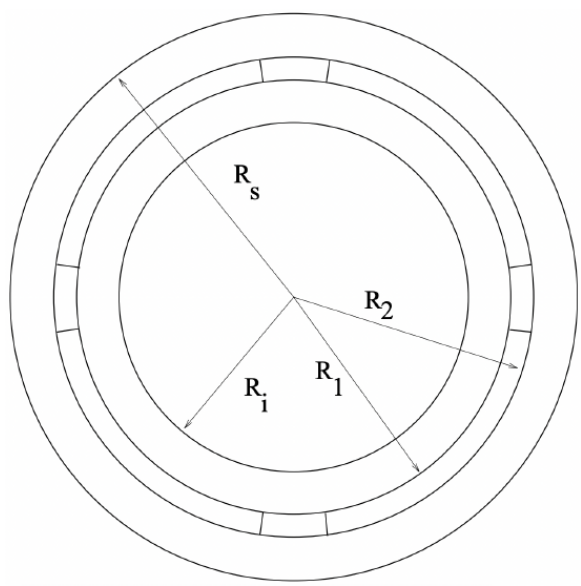

Figure 11: Axial View of Magnetic Field Problem

$$\nabla \cdot \bar{H} = -\nabla \cdot \bar{M} \tag{46}$$

or:

$$\nabla^2\psi = \nabla\cdot\bar{M} = \frac{1}{r}M_0\cos p\theta \tag{47}$$

Now, if we let the magnetic scalar potential be the sum of particular and homogeneous parts:

$$\psi = \psi_p + \psi_h \tag{48}$$

where $\nabla^2\psi_h = 0$, then:

$$\nabla^2\psi_p = \frac{1}{r}M_0\cos p\theta \tag{49}$$

We can find a suitable solution to the particular part of this in the region of magnetization by trying:

$$\psi_p = Cr^\gamma\cos p\theta \tag{50}$$

Carrying out the Laplacian on this:

$$\nabla^2\psi_p = Cr^{\gamma-2}\left(\gamma^2 - p^2\right)\cos p\theta = \frac{1}{r}M_0\cos p\theta \tag{51}$$

which works if $\gamma = 1$, in which case:

$$\psi_p = \frac{M_0 r}{1-p^2}\cos p\theta \tag{52}$$

Of course this solution holds only for the region of the magnets: \(\ R_{1}

A suitable homogeneous solution satisfies Laplace's equation, $\nabla^2\psi_h = 0$, and is in general of the form:

$$\psi_h = Ar^p\cos p\theta + Br^{-p}\cos p\theta \tag{53}$$

Then we may write a trial total solution for the flux density as:

\[\ R_{i}

\[\ R_{1}

\[\ R_{2}

The boundary conditions at the inner and outer (assumed infinitely permeable) boundaries at $r = R_i$ and $r = R_s$ require that the azimuthal field vanish, or $\frac{\partial\psi}{\partial\theta} = 0$, leading to:

$$B_1 = -R_i^{2p}A_1 \tag{57}$$

$$B_3 = -R_s^{2p}A_3 \tag{58}$$

At the magnet inner and outer radii, H_θ and B_r must be continuous. These are:

$$H_\theta = -\frac{1}{r}\frac{\partial\psi}{\partial\theta} \tag{59}$$

$$B_r = \mu_0\left(-\frac{\partial\psi}{\partial r} + M_r\right) \tag{60}$$

These become, at $r = R_1$:

$$-pA_1\left(R_1^{p-1} - R_i^{2p}R_1^{-p-1}\right) = -p\left(A_2R_1^{p-1} + B_2R_1^{-p-1}\right) - p\frac{M_0}{1-p^2} \tag{61}$$

$$-pA_1\left(R_1^{p-1} + R_i^{2p}R_1^{-p-1}\right) = -p\left(A_2R_1^{p-1} - B_2R_1^{-p-1}\right) - \frac{M_0}{1-p^2} + M_0 \tag{62}$$

and at $r = R_2$:

$$-pA_3\left(R_2^{p-1}-R_s^{2p}R_2^{-p-1}\right)=-p\left(A_2R_2^{p-1}+B_2R_2^{-p-1}\right)-p\frac{M_0}{1-p^2} \tag{63}$$

$$-pA_3\left(R_2^{p-1}+R_s^{2p}R_2^{-p-1}\right)=-p\left(A_2R_2^{p-1}-B_2R_2^{-p-1}\right)-\frac{M_0}{1-p^2}+M_0 \tag{64}$$

Some small-time manipulation of these yields:

$$A_1\left(R_1^p-R_i^{2p}R_1^{-p}\right)=A_2R_1^p+B_2R_1^{-p}+R_1\frac{M_0}{1-p^2} \tag{65}$$

$$A_1\left(R_1^p+R_i^{2p}R_1^{-p}\right)=A_2R_1^p-B_2R_1^{-p}+pR_1\frac{M_0}{1-p^2} \tag{66}$$

$$A_3\left(R_2^p-R_s^{2p}R_2^{-p}\right)=A_2R_2^p+B_2R_2^{-p}+R_2\frac{M_0}{1-p^2} \tag{67}$$

$$A_3\left(R_2^p+R_s^{2p}R_2^{-p}\right)=A_2R_2^p-B_2R_2^{-p}+pR_2\frac{M_0}{1-p^2} \tag{68}$$

Taking sums and differences of the first and second and then third and fourth of these we obtain:

$$2A_1R_1^p=2A_2R_1^p+R_1M_0\frac{1+p}{1-p^2} \tag{69}$$

$$2A_1R_i^{2p}R_1^{-p}=-2B_2R_1^{-p}+R_1M_0\frac{p-1}{1-p^2} \tag{70}$$

$$2A_3R_2^p=2A_2R_2^p+R_2M_0\frac{1+p}{1-p^2} \tag{71}$$

$$2A_3R_s^{2p}R_2^{-p}=-2B_2R_2^{-p}+R_2M_0\frac{p-1}{1-p^2} \tag{72}$$

and then multiplying through by appropriate factors (R2 p and R1 p and then taking sums and differences of these,

$$\left(A_1-A_3\right)R_1^pR_2^p=\left(R_1R_2^p-R_2R_1^p\right)\frac{M_0}{2}\frac{p+1}{1-p^2} \tag{73}$$

$$\left(A_1R_i^{2p}-A_3R_s^{2p}\right)R_1^{-p}R_2^{-p}=\left(R_1R_2^{-p}-R_2R_1^{-p}\right)\frac{M_0}{2}\frac{p-1}{1-p^2} \tag{74}$$

Dividing through by the appropriate groups:

$$A_1-A_3=\frac{R_1R_2^p-R_2R_1^p}{R_1^pR_2^p}\frac{M_0}{2}\frac{1+p}{1-p^2} \tag{75}$$

$$A_1R_i^{2p}-A_3R_s^{2p}=\frac{R_1R_2^{-p}-R_2R_1^{-p}}{R_1^{-p}R_2^{-p}}\frac{M_0}{2}\frac{p-1}{1-p^2} \tag{76}$$

and then, by multiplying the top equation by R_s^{2p} and subtracting:

$$A_1\left(R_s^{2p}-R_i^{2p}\right)=\left(\frac{R_1R_2^p-R_2R_1^p}{R_1^pR_2^p}\frac{M_0}{2}\frac{1+p}{1-p^2}\right)R_s^{2p}-\frac{R_1R_2^{-p}-R_2R_1^{-p}}{R_1^{-p}R_2^{-p}}\frac{M_0}{2}\frac{p-1}{1-p^2} \tag{77}$$

This is readily solved for the field coefficients A_1 and A_3:

$$A_1=-\frac{M_0}{2\left(R_s^{2p}-R_i^{2p}\right)}\left(\frac{p+1}{p^2-1}\left(R_1^{1-p}-R_2^{1-p}\right)R_s^{2p}+\frac{p-1}{p^2-1}\left(R_2^{1+p}-R_1^{1+p}\right)\right) \tag{78}$$

$$A_3=-\frac{M_0}{2\left(R_s^{2p}-R_i^{2p}\right)}\left(\frac{1}{1-p}\left(R_1^{1-p}-R_2^{1-p}\right)R_i^{2p}-\frac{1}{1+p}\left(R_2^{1+p}-R_1^{1+p}\right)\right) \tag{79}$$

Now, noting that the scalar potential is, in region 1 (radii less than the magnet),

\(\ \psi=A_{1}\left(r^{p}-R_{i}^{2 p} r^{-p}\right) \cos p \theta \quad r

$$\psi = A_3 \left(r^p - R_s^{2p} r^{-p}\right) \cos p\theta \quad r > R_2$$

and noting that $p(p+1)/\left(p^2-1\right) = p/(p-1)$ and $p(p-1)/\left(p^2-1\right) = p/(p+1)$, magnetic field is

\(\ 80\begin{aligned}
& r H_{r}=& \frac{M_{0}}{2\left(R_{s}^{2 p}-R_{i}^{2 p}\right)}\left(\frac{p}{p-1}\left(R_{1}^{1-p}-R_{2}^{1-p}\right) R_{s}^{2 p}+\frac{p}{p+1}\left(R_{2}^{1+p}-R_{1}^{1+p}\right)\right)\left(r^{p-1}+R_{i}^{2 p} r^{-p-1}\right) \cos p \theta \
& r>R_{2}
\end{aligned}\)

\[\ \begin{aligned}
& r H_{r}=& \frac{M_{0}}{2\left(R_{s}^{2 p}-R_{i}^{2 p}\right)}\left(\frac{p}{p-1}\left(R_{1}^{1-p}-R_{2}^{1-p}\right) R_{s}^{2 p}+\frac{p}{p+1}\left(R_{2}^{1+p}-R_{1}^{1+p}\right)\right)\left(r^{p-1}+R_{i}^{2 p} r^{-p-1}\right) \cos p \theta \
& r>R_{2}
\end{aligned}\tag{80} \]

$$H_r = \frac{M_0}{2\left(R_s^{2p} - R_i^{2p}\right)} \left(\frac{p}{p-1}\left(R_1^{1-p} - R_2^{1-p}\right) R_i^{2p} + \frac{p}{p+1}\left(R_2^{1+p} - R_1^{1+p}\right)\right)\left(r^{p-1} + R_s^{2p} r^{-p-1}\right) \cos p\theta \tag{81}$$

The case of $p = 1$ appears to be a bit troublesome here, but is easily handled by noting that:

$$\lim_{p\to 1} \frac{p}{p-1}\left(R_1^{1-p} - R_2^{1-p}\right) = \log \frac{R_2}{R_1}$$

Now: there are a number of special cases to consider.

For the iron-free case, $R_i \to 0$ and $R_2 \to \infty$, this becomes, simply, for \(\ r

$$H_r = \frac{M_0}{2} \frac{p}{p-1}\left(R_1^{1-p} - R_2^{1-p}\right) r^{p-1} \cos p\theta \tag{82}$$

Note that for the case of $p = 1$, the limit of this is

$$H_r = \frac{M_0}{2} \log \frac{R_2}{R_1} \cos\theta$$

and for $r > R_2$:

$$H_r = \frac{M_0}{2} \frac{p}{p+1}\left(R_2^{p+1} - R_1^{p+1}\right) r^{-(p+1)} \cos p\theta$$

For the case of a machine with iron boundaries and windings in slots, we are interested in the fields at the boundaries. In such a case, usually, either $R_i = R_1$ or $R_s = R_2$. The fields are:

at the outer boundary: $r = R_s$:

$$H_r = M_0 \frac{R_s^{p-1}}{R_s^{2p} - R_i^{2p}} \left(\frac{p}{p+1}\left(R_2^{p+1} - R_1^{p+1}\right) + \frac{p}{p-1} R_i^{2p}\left(R_1^{1-p} - R_2^{1-p}\right)\right) \cos p\theta$$

or at the inner boundary: $r = R_i$:

$$H_r = M_0 \frac{R_i^{p-1}}{R_s^{2p} - R_i^{2p}} \left(\frac{p}{p+1}\left(R_2^{p+1} - R_1^{p+1}\right) + \frac{p}{p-1} R_s^{2p}\left(R_1^{1-p} - R_2^{1-p}\right)\right) \cos p\theta$$

This page titled 12.7: Layout is shared under a CC BY-NC-SA 4.0 license and was authored, remixed, and/or curated by James Kirtley (MIT OpenCourseWare) via source content that was edited to the style and standards of the LibreTexts platform.

INDEX

A

Ampere's Law
6.2: Magnetic Circuits

D

direct axis
12.2: Zeroth Order Rating

F

Faraday's Law
6.3: Faraday's Law and Inductance

G

Gauss–Seidel iterative technique
5.3: Gauss–Seidel Iterative Technique

I

impedance
2.4: Impedance

inductance
6.3: Faraday's Law and Inductance

L

linearity
1.6: Linearity and Superposition

P

polyphase lines
3.6: Polyphase Lines and Single-Phase Equivalents

Q

quadrature axis
12.2: Zeroth Order Rating

S

surface armature winding
12.1: Motor Morphologies

symmetrical component transformation
4.1: The Symmetrical Component Transformation

T

three phase systems
3.2: Three Phase Systems

transformers
3.4: Transformers

Z

zeroth order rating
12.2: Zeroth Order Rating

This page titled Index is shared under a CC BY-NC-SA 4.0 license and was authored, remixed, and/or curated by James Kirtley (MIT OpenCourseWare) via source content that was edited to the style and standards of the LibreTexts platform.

GLOSSARY

S

Sample Word 1 | Sample Definition 1

This page titled Glossary is shared under a CC BY-NC-SA 4.0 license and was authored, remixed, and/or curated by James Kirtley (MIT OpenCourseWare) via source content that was edited to the style and standards of the LibreTexts platform.

DETAILED LICENSING

Overview

Title: Introduction to Electric Power Systems (Kirtley)

Webpages: 93

Applicable Restrictions: Noncommercial

All licenses found:

- CC BY-NC-SA 4.0: 96.8% (90 pages)
- Undeclared: 3.2% (3 pages)

By Page

- Introduction to Electric Power Systems (Kirtley) - *CC BY-NC-SA 4.0*
  - Front Matter - *CC BY-NC-SA 4.0*
    - TitlePage - *CC BY-NC-SA 4.0*
    - InfoPage - *CC BY-NC-SA 4.0*
    - Table of Contents - *Undeclared*
    - Licensing - *Undeclared*
  - 1: Review of network theory - *CC BY-NC-SA 4.0*
    - 1.1: Network Primitives - *CC BY-NC-SA 4.0*
    - 1.2: Examples- Voltage and Current Dividers - *CC BY-NC-SA 4.0*
    - 1.3: Node Voltages and Reference - *CC BY-NC-SA 4.0*
    - 1.4: Serial and Parallel Combinations - *CC BY-NC-SA 4.0*
    - 1.5: Loop and Node Equations - *CC BY-NC-SA 4.0*
    - 1.6: Linearity and Superposition - *CC BY-NC-SA 4.0*
    - 1.7: Thevenin and Norton Equivalent Circuits - *CC BY-NC-SA 4.0*
    - 1.8: Two Port Networks - *CC BY-NC-SA 4.0*
    - 1.9: Inductive and Capacitive Circuit Elements - *CC BY-NC-SA 4.0*
  - 2: AC power flow in linear networks - *CC BY-NC-SA 4.0*
    - 2.1: Transmission Lines - *CC BY-NC-SA 4.0*
    - 2.2: Complex Exponential Notation - *CC BY-NC-SA 4.0*
    - 2.3: Sinusoidal Time Functions - *CC BY-NC-SA 4.0*
    - 2.4: Impedance - *CC BY-NC-SA 4.0*
    - 2.5: System Functions and Frequency Response - *CC BY-NC-SA 4.0*
    - 2.6: Phasors - *CC BY-NC-SA 4.0*
    - 2.7: Energy and Power - *CC BY-NC-SA 4.0*
    - 2.8: A Conservation Law - *CC BY-NC-SA 4.0*
    - 2.9: Power Flow Through An Impedance - *CC BY-NC-SA 4.0*
    - 2.10: Compensated Line - *CC BY-NC-SA 4.0*
  - 3: Polyphase Networks - *CC BY-NC-SA 4.0*
    - 3.1: Two Phases - *CC BY-NC-SA 4.0*
    - 3.2: Three Phase Systems - *CC BY-NC-SA 4.0*
    - 3.3: Line-Line Voltages - *CC BY-NC-SA 4.0*
    - 3.4: Transformers - *CC BY-NC-SA 4.0*
    - 3.5: Three-Phase Transformers - *CC BY-NC-SA 4.0*
    - 3.6: Polyphase Lines and Single-Phase Equivalents - *CC BY-NC-SA 4.0*
    - 3.7: Introduction To Per-Unit Systems - *CC BY-NC-SA 4.0*
  - 4: Introduction to symmetrical components - *CC BY-NC-SA 4.0*
    - 4.1: The Symmetrical Component Transformation - *CC BY-NC-SA 4.0*
    - 4.2: Sequence Impedances - *CC BY-NC-SA 4.0*
    - 4.3: Unbalanced Sources - *CC BY-NC-SA 4.0*
    - 4.4: Rotating Machines - *CC BY-NC-SA 4.0*
    - 4.5: Transformers - *CC BY-NC-SA 4.0*
    - 4.6: Unbalanced Faults - *CC BY-NC-SA 4.0*
  - 5: Introduction to Load Flow - *CC BY-NC-SA 4.0*
    - 5.1: Power Flow - *CC BY-NC-SA 4.0*
    - 5.2: Bus Admittance - *CC BY-NC-SA 4.0*
    - 5.3: Gauss–Seidel Iterative Technique - *CC BY-NC-SA 4.0*
    - 5.4: Example- Simple–Minded Program - *CC BY-NC-SA 4.0*
    - 5.5: Example - *CC BY-NC-SA 4.0*
  - 6: Magnetic circuit analog to electric circuits - *CC BY-NC-SA 4.0*
    - 6.1: Electric Circuits and Kirchoff's Laws - *CC BY-NC-SA 4.0*
    - 6.2: Magnetic Circuits - *CC BY-NC-SA 4.0*
    - 6.3: Faraday's Law and Inductance - *CC BY-NC-SA 4.0*
  - 7: Power electric motor drives - *CC BY-NC-SA 4.0*

- 8: Electromagnetic forces and loss mechanisms - *CC BY-NC-SA 4.0*
  - 8.1: Energy Conversion Process- - *CC BY-NC-SA 4.0*
  - 8.2: Tying the MST and Poynting Approaches Together - *CC BY-NC-SA 4.0*
  - 8.3: Simple Description of a Linear Induction Motor - *CC BY-NC-SA 4.0*
  - 8.4: Surface Impedance of Uniform Conductors - *CC BY-NC-SA 4.0*
  - 8.5: Iron - *CC BY-NC-SA 4.0*
  - 8.6: Semi-Empirical Method of Handling Iron Loss - *CC BY-NC-SA 4.0*
- 9: Synchronous machine and winding models - *CC BY-NC-SA 4.0*
  - 9.1: Relating Rating to Size - *CC BY-NC-SA 4.0*
  - 9.2: Winding Inductance Calculation - *CC BY-NC-SA 4.0*
  - 9.3: Physical Picture- Current Sheet Description - *CC BY-NC-SA 4.0*
  - 9.4: Continuous Approximation to Winding Patterns - *CC BY-NC-SA 4.0*
  - 9.5: Classical, Lumped-Parameter Synchronous Machine - *CC BY-NC-SA 4.0*
  - 9.6: Balanced Operation - *CC BY-NC-SA 4.0*
  - 9.7: Reconciliation of Models - *CC BY-NC-SA 4.0*
  - 9.8: Per-Unit Systems - *CC BY-NC-SA 4.0*
  - 9.9: Normal Operation - *CC BY-NC-SA 4.0*
  - 9.10: Salient Pole Machines- Two-Reaction Theory - *CC BY-NC-SA 4.0*
- 10: Analytic design evaluation of induction machines - *CC BY-NC-SA 4.0*
  - 10.1: Induction Motor Transformer Model - *CC BY-NC-SA 4.0*
  - 10.2: Operation- Energy Balance - *CC BY-NC-SA 4.0*
  - 10.3: Squirrel Cage Machine Model - *CC BY-NC-SA 4.0*
  - 10.4: Solid Iron Rotor Bodies - *CC BY-NC-SA 4.0*
  - 10.5: Induction Motor Speed Control - *CC BY-NC-SA 4.0*
- 11: DC (commutator) and permanent magnet machines - *CC BY-NC-SA 4.0*
  - 11.1: Introduction - *CC BY-NC-SA 4.0*
  - 11.2: Permanent Magnets in Electric Machines - *CC BY-NC-SA 4.0*
  - 11.3: Simple Permanent Magnet Machine Structures- Commutator Machines - *CC BY-NC-SA 4.0*
- 12: Permanent magnet "Brushless DC" motors - *CC BY-NC-SA 4.0*
  - 12.1: Motor Morphologies - *CC BY-NC-SA 4.0*
  - 12.2: Zeroth Order Rating - *CC BY-NC-SA 4.0*
  - 12.3: Parameter Estimation - *CC BY-NC-SA 4.0*
  - 12.4: Current Rating and Resistance - *CC BY-NC-SA 4.0*
  - 12.5: Appendix 1- Air-Gap Winding Inductance - *CC BY-NC-SA 4.0*
  - 12.6: Appendix 2- Permanent Magnet Field Analysis - *CC BY-NC-SA 4.0*
  - 12.7: Layout - *CC BY-NC-SA 4.0*
- Back Matter - *CC BY-NC-SA 4.0*
  - Index - *CC BY-NC-SA 4.0*
  - Glossary - *CC BY-NC-SA 4.0*
  - Detailed Licensing - *Undeclared*

This page titled Introduction to Electric Power Systems (Kirtley) is shared under a CC BY-NC-SA 4.0 license and was authored, remixed, and/or curated by James Kirtley via source content that was edited to the style and standards of the LibreTexts platform.