AC ELECTRICAL CIRCUIT ANALYSIS: A PRACTICAL APPROACH

James M. Fiore
Mohawk Valley Community College

LibreTexts™

Default Text

This text is disseminated via the Open Education Resource (OER) LibreTexts Project (https://LibreTexts.org) and like the thousands of other texts available within this powerful platform, it is freely available for reading, printing, and "consuming."

The LibreTexts mission is to bring together students, faculty, and scholars in a collaborative effort to provide an accessible, and comprehensive platform that empowers our community to develop, curate, adapt, and adopt openly licensed resources and technologies; through these efforts we can reduce the financial burden born from traditional educational resource costs, ensuring education is more accessible for students and communities worldwide.

Most, but not all, pages in the library have licenses that may allow individuals to make changes, save, and print this book. Carefully consult the applicable license(s) before pursuing such effects. Instructors can adopt existing LibreTexts texts or Remix them to quickly build course-specific resources to meet the needs of their students. Unlike traditional textbooks, LibreTexts' web based origins allow powerful integration of advanced features and new technologies to support learning.

LibreTexts is the adaptable, user-friendly non-profit open education resource platform that educators trust for creating, customizing, and sharing accessible, interactive textbooks, adaptive homework, and ancillary materials. We collaborate with individuals and organizations to champion open education initiatives, support institutional publishing programs, drive curriculum development projects, and more.

The LibreTexts libraries are Powered by NICE CXone Expert and was supported by the Department of Education Open Textbook Pilot Project, the California Education Learning Lab, the UC Davis Office of the Provost, the UC Davis Library, the California State University Affordable Learning Solutions Program, and Merlot. This material is based upon work supported by the National Science Foundation under Grant No. 1246120, 1525057, and 1413739.

Any opinions, findings, and conclusions or recommendations expressed in this material are those of the author(s) and do not necessarily reflect the views of the National Science Foundation nor the US Department of Education.

Have questions or comments? For information about adoptions or adaptions contact info@LibreTexts.org or visit our main website at https://LibreTexts.org.

The LibreTexts name, logo, and book covers are trademarked by LibreTexts, Inc. (a 501(c)(3) not-for-profit organization) and protected against unauthorized use.

This text was compiled on 08/26/2026

TABLE OF CONTENTS

Licensing

Introduction

1: Fundamentals

1.1: Introduction

1.2: Sinusoidal Waveforms

1.3: Basic Fourier Analysis

1.4: Complex Numbers

1.5: Reactance and Impedance

1.6: Phasor Diagrams

1.7: Summary

1.8: Exercises

2: Series RLC Circuits

2.1: Introduction

2.2: The Series Connection

2.3: Series Impedance

2.4: Series Circuit Analysis

2.5: Concerning Practical Inductors

2.6: Summary

2.7: Exercises

3: Parallel RLC Circuits

3.1: Introduction

3.2: The Parallel Connection

3.3: Parallel Impedance

3.4: Parallel Circuit Analysis

3.5: Summary

3.6: Exercises

4: Series-Parallel RLC Circuits

4.1: Introduction

4.2: The Series-Parallel Connection

4.3: Series-Parallel Impedance

4.4: Series-Parallel Circuit Analysis

4.5: Summary

4.6: Exercises

5: Analysis Theorems and Techniques

5.1: Introduction

5.2: Source Conversions

5.3: Superposition Theorem
5.4: Thévenin's and Norton's Theorems
5.5: Maximum Power Transfer Theorem
5.6: Delta-Y (Pi-T) Conversions
5.7: Summary
5.8: Exercises

6: Nodal and Mesh Analysis
6.1: Introduction
6.2: Nodal Analysis
6.3: Mesh Analysis
6.4: Dependent Sources
6.5: Summary
6.6: Exercises

7: AC Power
7.1: Introduction
7.2: Power Waveforms
7.3: Power Triangle
7.4: Power Systems
7.5: Summary
7.6: Exercises

8: Resonance
8.1: Introduction
8.2: Series Resonance
8.3: Parallel Resonance
8.4: Summary
8.5: Exercises

9: Polyphase Power
9.1: Introduction to Polyphase Power
9.2: Polyphase Definition
9.3: Three-Phase Connections
9.4: Power Factor Correction
9.5: Summary
9.6: Exercises

10: Decibels and Bode Plots
10.1: Introduction
10.2: The Decibel
10.3: Bode Plots
10.4: Combining the Elements - Multi-Stage Effects
10.5: Summary

10.6: Exercises

Index

Glossary

Detailed Licensing

This page titled AC Electrical Circuit Analysis: A Practical Approach (Fiore) is shared under a CC BY-NC-SA 4.0 license and was authored, remixed, and/or curated by James M. Fiore via source content that was edited to the style and standards of the LibreTexts platform.

Licensing

A detailed breakdown of this resource's licensing can be found in ***Back Matter/Detailed Licensing***.

This page titled Licensing is shared under a license and was authored, remixed, and/or curated by LibreTexts.

Introduction

Welcome to the AC Electrical Circuit Analysis, an open educational resource (OER). The goal of this text is to introduce the theory and practical application of analysis of AC electrical circuits. It assumes familiarity with DC circuit analysis. If you have not studied DC circuit analysis, it is strongly recommended that you read the companion OER text, DC Electrical Circuit Analysis before continuing. Both texts are offered free of charge under a Creative Commons non-commercial, share-alike with attribution license. For your convenience, along with the free pdf and odt files, print copies are available at a very modest charge. Check my web sites for links.

This text is based on the earlier Workbook for AC Electrical Circuits, which it replaces. The original expository text has been greatly expanded and includes many examples along with computer simulations. For the convenience of those who used the Workbook, many of the problem sets are the same, with some re-ordering depending on the chapter.

If you are already familiar with DC Electrical Circuit Analysis, the format of this title is similar. This text picks up where the DC text leaves off; beginning with AC concepts such as sinusoidal waveforms, basic Fourier decomposition of complex waveforms, complex numbers and the like. Also, reactance and impedance are introduced along with phasor diagrams. Chapters on series, parallel and series-parallel RLC circuits commence. Following these, network theorems along with nodal and mesh analysis are discussed for the AC case. The text completes with chapters on AC power, resonance, and introductions to polyphase systems and magnetic circuits. Each chapter begins with a set of learning objectives and concludes with practice exercises that are generally divided into four major types: analysis, design, challenge and simulation. Many SPICE-based circuit simulators are available, both free and commercial, that can be used with this text. The answers to most odd-numbered exercises can be found in the Appendix. A table of standard resistor sizes is also in the Appendix, which is useful for real-world design problems. If you have any questions regarding this workbook, or are interested in contributing to the project, do not hesitate to contact me.

This text is part of a series of OER titles in the areas of electricity, electronics, audio and computer programming. It includes three other textbooks covering semiconductor devices, operational amplifiers, and embedded programming using the C language with the Arduino platform. There is a text covering DC electrical circuits similar to this one, and also seven laboratory manuals; one for each of the five texts plus individual titles covering computer programming using the Python language, and the science of sound. The most recent versions of all of my OER texts and manuals may be found at my MVCC web site as well as my mirror site: www.dissidents.com

This text was created using several free and open software applications including Open Office, Dia, and XnView.

Special thanks to the following individuals for their efforts in reviewing and proofreading the DC and AC Electrical Circuit Analysis texts: Glenn Ballard, John Markham, João Nuno Carvalho, Mark Steffka and Jim Noon.

This page titled Introduction is shared under a license and was authored, remixed, and/or curated by LibreTexts.

1: FUNDAMENTALS

Learning Objectives

After completing this chapter, you should be able to:

- Describe sinusoidal waveforms in mathematical terms.
- Express complex waveforms using basic Fourier analysis.
- Perform mathematical operations using complex numbers.
- Draw phasor diagrams for complex numbers.
- Compute and plot capacitive and inductive reactance as a function of frequency.
- Compute and plot complex impedance as a function of frequency.
- Describe the relationships between resistance, reactance, impedance, conductance, susceptance and admittance

1.1: Introduction

1.2: Sinusoidal Waveforms

1.3: Basic Fourier Analysis

1.4: Complex Numbers

1.5: Reactance and Impedance

1.6: Phasor Diagrams

1.7: Summary

1.8: Exercises

This page titled 1: Fundamentals is shared under a CC BY-NC-SA 4.0 license and was authored, remixed, and/or curated by James M. Fiore via source content that was edited to the style and standards of the LibreTexts platform.

1.1: Introduction

In this chapter we begin our study of alternating current, or AC, electrical circuit analysis. As such, this chapter is filled with foundational material that will be used in the remainder of this text. It is critical that the concepts presented here be fully understood in order to achieve success in later chapters. We start with the mathematical description of the most simple AC waveform, the sine wave. This includes parameters such as amplitude, frequency, period, phase and DC offset. From there we discover how to describe other waveforms in terms of combinations of sine waves, and also how to determine the effective, or DC equivalent, value of a sine wave. AC analysis is practically impossible to perform without the use of complex numbers, and discussion follows with their description and proper manipulation. Finally, we introduce the concepts of reactance and impedance, and how they relate to resistance. This includes examination using both frequency domain plots and phasor diagrams. Phasor diagrams are vector plots and can be used to show the relationships between various voltages in a circuit, as well as between currents or resistive/reactive values.

Many of the topics in this text will echo your studies in DC circuit analysis, such as Ohm's law, Kirchhoff's voltage and current laws, series-parallel analysis, nodal analysis, and the like. Thus many concepts will be familiar. The major practical difference is that all quantities in DC systems are scalars, that is, they have only magnitude. In contrast, AC quantities are vectors, and thus have both magnitude and direction (or more properly, phase). Consequent;y, mathematical operations such as addition or multiplication have to follow vector rules instead of scalar rules. Forgetting to do so is a common error for students new to the subject and one that will bring no end of grief. These rules will be reviewed in the section covering complex numbers. Make sure that you have this material mastered before proceeding.

This page titled 1.1: Introduction is shared under a CC BY-NC-SA 4.0 license and was authored, remixed, and/or curated by James M. Fiore via source content that was edited to the style and standards of the LibreTexts platform.

1.2: Sinusoidal Waveforms

AC, or alternating current, is so named because the current alternates or flips back and forth between two polarities. In other words, the current (and consequently the voltage) is a function of time. This is fundamentally different from direct current that is fixed in polarity and generally constant over time. A laboratory DC voltage source, for example, ideally maintains a set voltage across its terminals and does not vary over time. In contrast, as an AC waveform swings back and forth through time, its shape can exhibit wide variations ranging from the simple, regular paths of laboratory standards such as sine waves, triangle waves and square waves, to the far more complex and undulating waveforms produced by musical instruments and the human voice.

The sine wave is the simplest wave that may be created. It represents the motion of a simple vector rotating at a constant speed, such as the vertical displacement of the second hand of a clock. An example is shown in Figure $1.2.1$. The horizontal axis plots time. It increases as we move from left to right (i.e., if point A is to the right of point B, then A occurs later in time than does B). The vertical axis is represented here in general as a percentage of maximum but would ordinarily be a measurement of voltage, current, sound pressure, or the like.

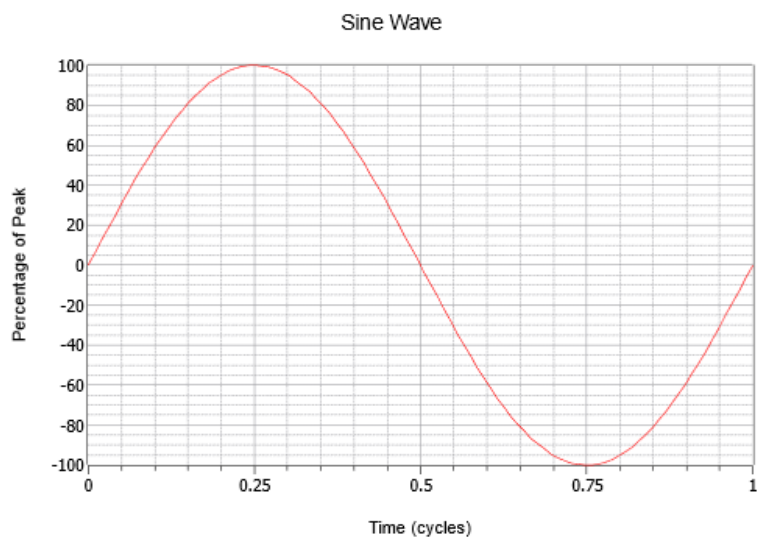

Figure $1.2.1$: A sine wave.

Note the smooth variation that starts at zero, rises to a positive peak one quarter way through, falls back to zero when halfway through, continues to a negative peak three quarters through, and then rises again to where it started. This process then repeats. Each repeat is referred to as a cycle. In Figure $1.2.1$, one complete cycle is shown.

Sine waves exhibit quarter wave symmetry. That is, each quarter (in time) of the wave is identical to any other if you simply flip it around the horizontal axis and/or rotate it upright about its peak. The time it takes to complete one cycle is called the period and is denoted with the symbol T (for Time). The reciprocal of the period is the frequency, f.

$$f = \frac{1}{T} \tag{1.2.1}$$

The frequency indicates how many cycles exist in one second. To honor one of the 19th century researchers in the field, instead of calling the unit “cycles per second”, we use Hertz, named after Heinrich Hertz and abbreviated Hz. In Figure $1.2.2$ three sine waves are shown with different frequencies; the initial wave (green), a wave at twice the frequency (blue), and a third at half the frequency or twice the period (red).

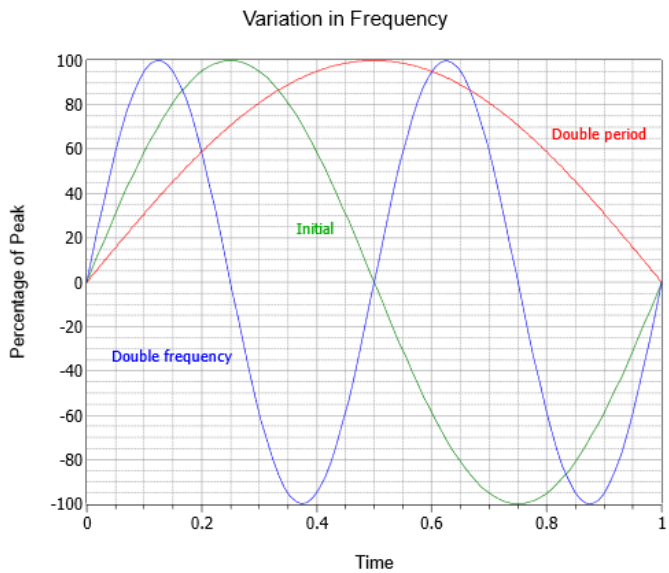

Figure 1.2.2: Sine wave frequency variation.

The amplitude (vertical) of the wave can be expressed as a peak quantity, which is the change from the center zero line up to the most positive value. Amplitude may also be expressed as peak-to-peak; the distance from the most negative to the most positive. For a sine wave this will always be twice the peak value, although that might not be the case for other waves which may be asymmetrical. A series of three sine waves with differing amplitudes are shown in Figure 1.2.3. Along side the initial (green) are double amplitude (blue) and half amplitude (red) versions.

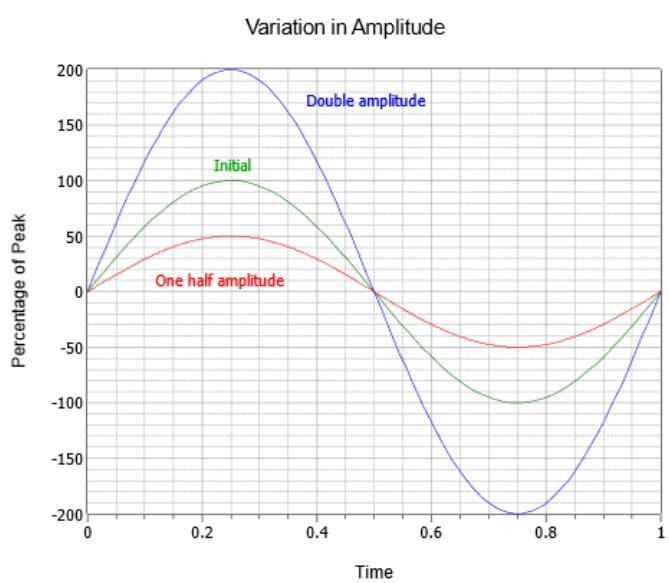

Figure 1.2.3: Sine wave amplitude variation.

Combining these parameters, consider the voltage waveform shown in Figure 1.2.4. Here we see two cycles of an AC voltage waveform.

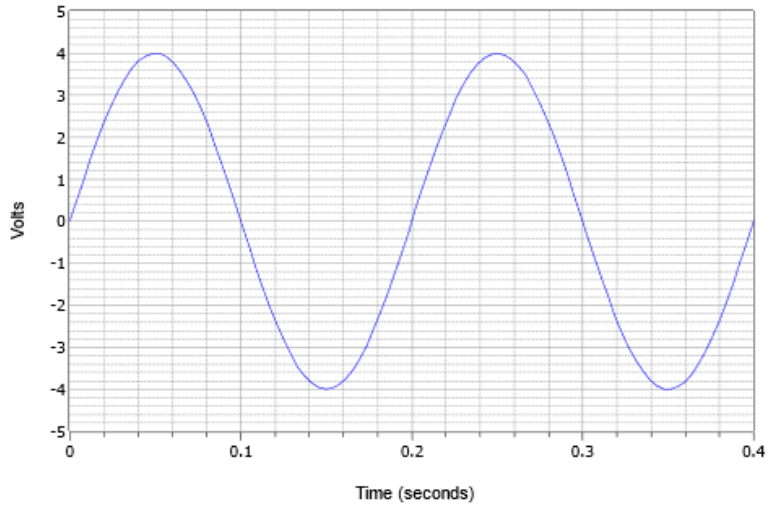

Figure $1.2.4$: Basic sine wave example.

The peak value is 4 volts and the peak-to-peak value is 8 volts (typically abbreviated as “8 V pp”). The period of one cycle is 0.2 seconds, or $T = 200$ milliseconds. Further, the frequency, $f = 1/200$ milliseconds, or 5 Hz (5 cycles in one second).

AC waveforms may also be combined with a DC offset. Adding a positive DC level shifts the wave up vertically, while a negative DC level shifts the wave down vertically. This does not alter the frequency or AC portion of the amplitude (although the absolute peaks would shift by the DC value). Figure $1.2.5$ shows the effect of various DC offsets. Above the initial wave (green) is an otherwise identical wave with a positive DC offset equal to 20% of the original peak value (blue). Below the original is a third wave (red) that exhibits a negative DC offset equal to half of the peak value of the original.

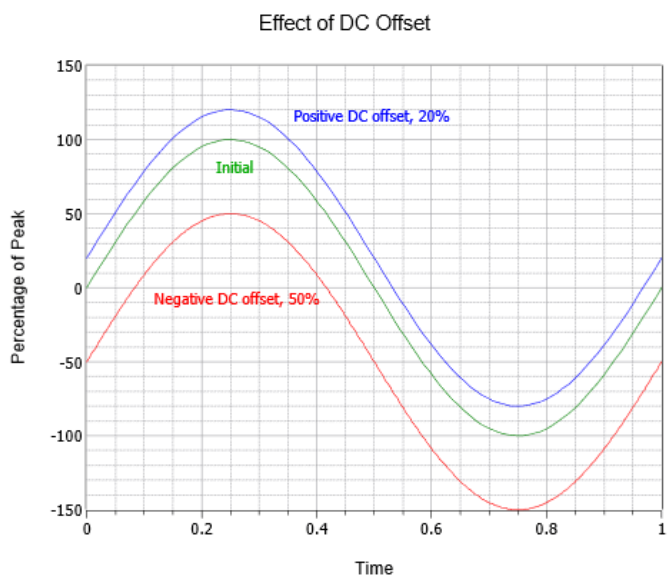

Figure $1.2.5$: Sine wave DC offset variation.

Further, it is possible for a sine wave to be shifted in time compared to some other sine wave or reference. While it is possible to indicate this shift as an absolute time, it is more common to do so as a phase shift, that is, the time expressed as a portion of the period in degrees. For example, if one sine is ahead of another by one quarter of the period, it is said to be leading by 90° (i.e., 1/4 of 360°). If it is behind by ½ of the period, it is said to be lagging by 180° (i.e., later in time by 1/2 cycle). Another way of stating this is that leading waveforms start earlier in time and thus are drawn to the left of the reference, while lagging waveforms start later in time and are drawn to the right.

Figure $1.2.6$ illustrates the effect of phase shift. Note that in this plot, $t = 0$ has been moved to the center of the horizontal axis.

The middle curve is the initial, or reference, wave (green). To the left (red) is a wave leading the initial wave by one-eighth cycle, or 45°. To the right (blue), is a lagging wave of half as much, or –22.5°.

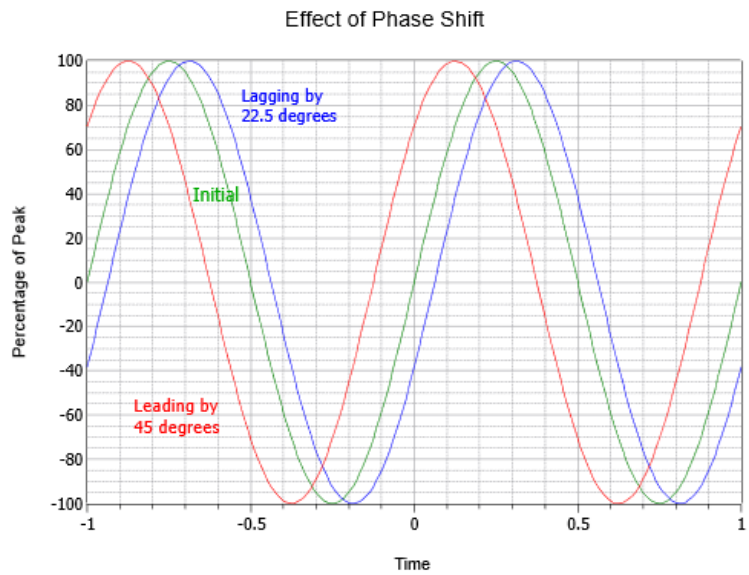

Figure $1.2.6$: Sine wave phase variation.

Combining the foregoing elements allows us to develop a general format for a sine wave (voltage shown):

$$v(t) = V_{DC} + V_P \sin(2\pi f t + \theta) \tag{1.2.2}$$

where

- $v(t)$ is the voltage at some time t,
- V_{DC} is the DC offset, if any,
- V_P is the peak value,
- f is the frequency,
- θ is the phase shift (+ if leading and drawn to the left, – if lagging and drawn to the right).

For a quick and practical example, the waveform shown in Figure $1.2.4$ has an amplitude of 4 volts peak, a frequency of 5 Hz, and no DC offset or phase shift. Thus, its expression is $v(t) = 4\sin(2\pi 5t)$

To compute a phase shift, first determine the time differential between the waveform and the reference, which we'll call Δt. The reference may be a fixed point in time (e.g., $t = 0$) or another waveform. Generally, the easy way to do this is to measure the difference at the zero-crossings, assuming there is no DC offset. If there is an offset, make the measurement where the zero crossing has been shifted to (i.e., at the DC offset level). Once the difference is found, divide it by the period to represent the shift as a fraction of a period. As one cycle represents one rotation of the vector, or 360 degrees, simply multiply the fraction by 360 degrees to find the phase shift in degrees. Expressed as a formula:

$$\theta = 360^\circ \frac{\Delta t}{T} \tag{1.2.3}$$

Remember, if the wave is shifted to the left then it is leading and positive, while a shift to the right is lagging or delayed in time, and thus negative.

Example $1.2.1$

Write the expression for the waveform shown in Figure $1.2.7$.

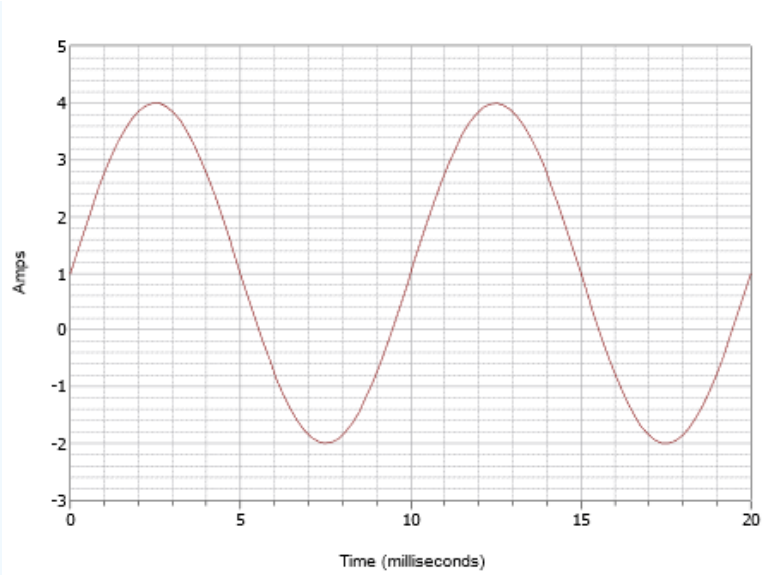

Figure 1.2.7: Waveform for Example 1.2.1.

This waveform superficially may look like the one in Figure 1.2.4 but don't let this fool you. First of all, the time scale is different. For this waveform, one cycle completes in 10 milliseconds. Therefore, the frequency is

$$f = \frac{1}{T} \tag{1.2.4}$$

$$= \frac{1}{10ms} \tag{1.2.5}$$

$$= 100Hz \tag{1.2.6}$$

The second issue is the DC offset. Note that the positive peak occurs at 4 amps while the negative peak occurs at –2 amps. This indicates a peak-topeak value of 6 amps. Without an offset, the positive peak would be at 3 amps, therefore there is a +1 amp DC offset. The vertical center of the waveform is shifted up from 0 amps to +1 amp. This point is at t = 0, therefore, there is no phase shift. The resulting expression is:

$$i(t) = 1 + 3\sin(2\pi 100t)$$

Example 1.2.2

Write the expression for the waveform shown in Figure 1.2.8.

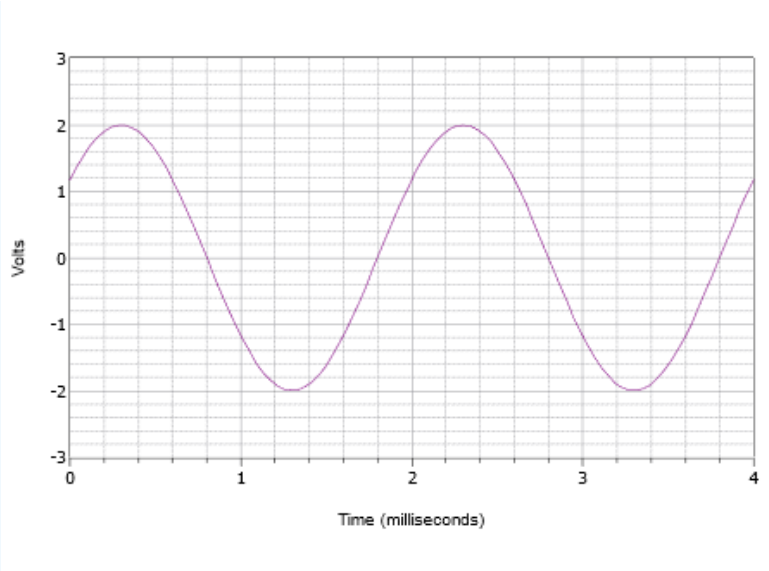

Figure $1.2.8$: Waveform for Example $1.2.2$.

First off, the positive peak is 2 volts and the peak-to-peak value is 4 volts. Therefore there is no DC offset. The vertical center of the wave does not start at $t = 0$, thus there must be a phase shift. The value at $t = 0$ is 1.2 volts. The wave hits this same amplitude at $t = 2$ milliseconds and begins to repeat another cycle. Consequently the period must be 2 milliseconds. The frequency is the reciprocal of this value, and thus $f = 500$ Hz.

The waveform is shifted to the left which indicates a positive or leading phase shift. If we examine the second cycle, we see that it hits zero volts at 1.8 milliseconds. Therefore the shift is 0.2 milliseconds. Expressed in degrees this is:

$$\theta = 360^\circ \frac{\Delta t}{T}$$

$$\theta = 360^\circ \frac{0.2ms}{2ms}$$

$$\theta = 36^\circ$$

The final expression is:

$$v(t) = 2\sin(2\pi 500t + 36^\circ)$$

Example $1.2.3$

Draw the waveform corresponding to the following expression.

$$v(t) = -3 + 5\sin(2\pi 40000t - 72^\circ)$$

First, note that the –3 volt offset pushes the positive peak down from 5 volts to 2 volts, and the negative peak down from –5 volts to –8 volts. The frequency of 40 kHz dictates a period of:

$$\begin{aligned} T &= \frac{1}{f} \\ &= \frac{1}{40kHz} \\ &= 25\mu s \end{aligned}$$

The phase shift of –72° represents 72/360, or 0.2 cycles. This corresponds to a time delay (shifted right because it's negative) of 0.2 times 25 μs, or 5 μs.

Initially, it is often best to construct the plot via a series of discrete steps rather than trying to draw the entire thing in one go. First, draw a sine wave with a 5 volt peak amplitude and a period of 25 μs. Now, push the waveform down 3 volts so that the positive peak is only 2 volts and the negative peak is down at -8 volts. Finally, push the newly shifted waveform to the right by 5 μs. The result is shown in Figure $1.2.9$.

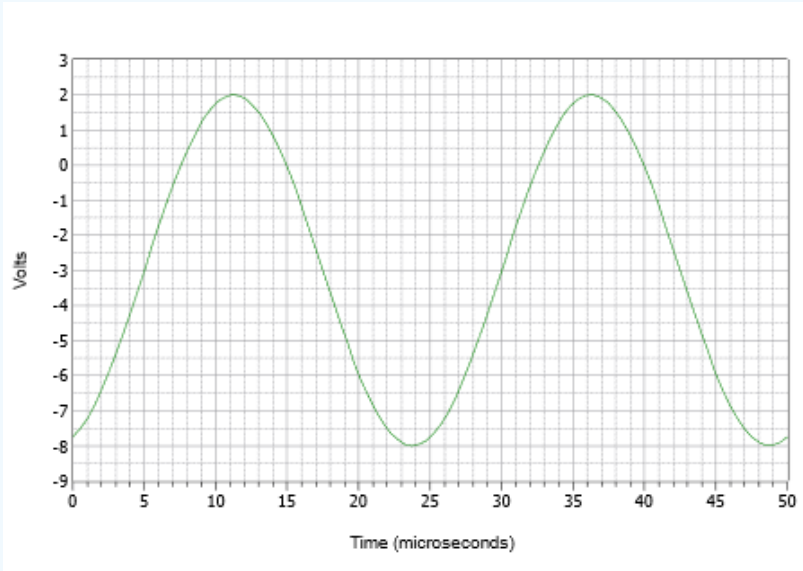

Figure $1.2.9$: Waveform for Example $1.2.3$.

Laboratory Measurements

In the laboratory, a function generator is used to generate sines and other waveshapes. These devices will allow precise control over both the amplitude and frequency of the wave along with adding a DC offset, if desired. An example is shown in Figure $1.2.10$. The corresponding measurement tool is the oscilloscope, or just scope, for short.

Figure $1.2.10$: Laboratory signal generator.

The oscilloscope is perhaps the most useful and versatile measurement device in the laboratory. Typically, they feature either two or four input channels, although more are possible. Each input channel has its own sensitivity adjustment and all channels share a common time reference. The display draws waveforms in the same manner as those seen in Figures $1.2.1$ – $1.2.9$. Also, they can plot one voltage versus another (X – Y mode). Modern oscilloscopes have additional features such as the automatic measurement of frequency, amplitude, phase shift, etc., cursor-based measurements, and the ability to save display images as graphics files. An example of a four channel digital oscilloscope is shown in Figure $1.2.11$.

Figure 1.2.11: A digital oscilloscope.

Schematic Symbols

As far as schematics are concerned, the symbols for AC voltage and current sources are shown in Figure 1.2.12. The polarity and direction markings are not absolute; after all, these are AC sources whose polarity and directions flip back and forth. The markers are instead used to establish a timing reference, especially in circuits employing multiple sources.

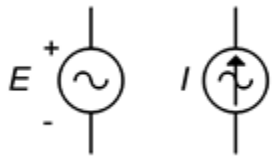

Figure 1.2.12: Schematic symbols for AC voltage source (left) and current source (right).

It is worth remembering that negating a source is the same as flipping its polarity. This was true for DC sources and remains true for AC sources. This is illustrated in Figure 1.2.13. Sometimes flipping or negating source will make analysis a little more obvious or easier to visualize.

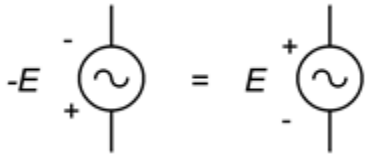

Figure 1.2.13: Polarity/sign equivalence.

Example 1.2.4

Assume an oscilloscope displays two waves as depicted in Figure 1.2.14. Determine the phase shift of the smaller 20 volt peak (blue) waveform relative to the larger 25 volt peak (red) waveform.

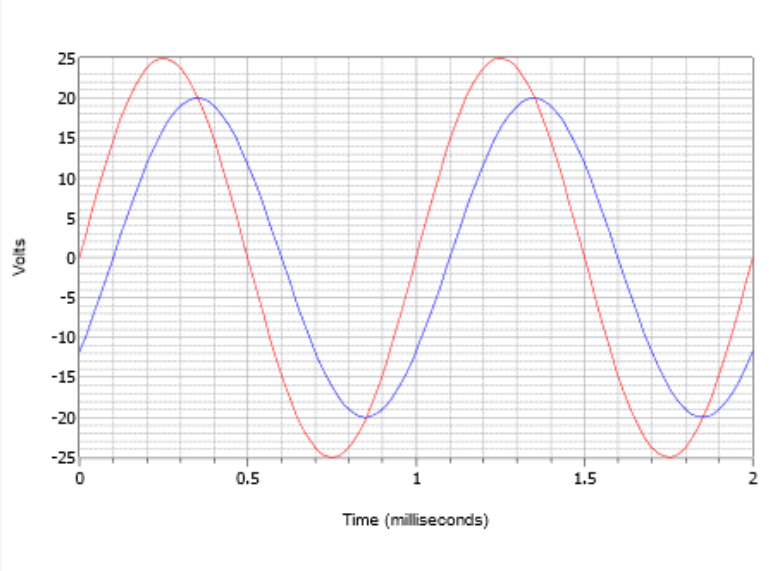

Figure $1.2.14$: Waveforms for Example $1.2.4$.

First, note that neither wave exhibits a DC offset. If one or both them had an offset, the wave(s) would have to be shifted vertically so that their normal zero-crossing points would be at the same level. Measuring either wave, the period is found to be 1 millisecond. The time shift most easily can be found at any of the zero-crossings (there are four locations to choose from). The delay is one small deviation, or 0.1 milliseconds, with the smaller wave delayed in time, or lagging the larger wave. This indicates a negative phase shift.

$$\theta = 360^\circ \frac{\Delta t}{T}$$

$$\theta = 360^\circ \frac{-0.1ms}{1ms}$$

$$\theta = -36^\circ$$

Sines and Cosines

There are a handful of specific phase shifts that are worth a closer look. If a sine wave is inverted, that is, flipped upside down, it is indistinguishable from a sine wave that has been shifted either +180 or –180 degrees. In other words, such a wave can be written three different ways: $-\sin(2\pi ft)$, $\sin(2\pi ft - 180^\circ)$, or $\sin(2\pi ft + 180^\circ)$. Further, if a sine wave is shifted by +90 degrees (i.e., leading and to the left), it may also be referred to as a cosine wave. Thus $\sin(2\pi ft + 90^\circ) = \ cos(2\pi ft)$. Finally, if a sine wave is shifted by –90 degrees (i.e., lagging and to the right), it may be referred to as a negative or inverted cosine wave. Thus $\sin(2\pi ft - 90^\circ) = -\cos(2\pi ft)$. The relationships of these four waves are illustrated in Figure $1.2.15$.

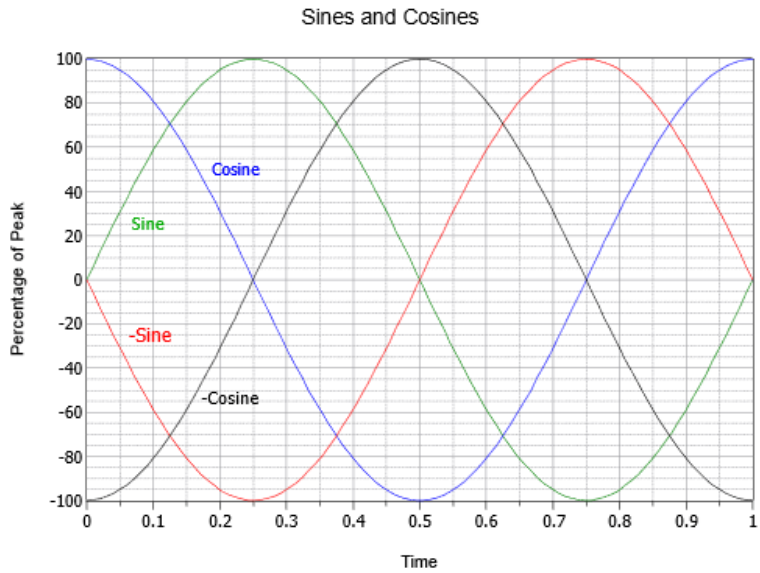

Figure $1.2.15$: Time relationships between sines and cosines.

It is also worth noting that the cosine wave represents the first derivative, or slope, of the sine wave. As you may recall from other studies, the slope or “steepness” of a line is the ratio of the vertical change to the horizontal change, sometimes called “the rise over the run”. For a voltage, it would be the change in voltage over the change in time, or $\Delta V/\Delta t$. For a smooth, continuously changing curve like a sine wave, the slope at a given point is defined properly as the first derivative, or dv/dt in this case. To verify that this is true visually, note that the steepest part of the sine wave (green) is where it crosses zero amplitude. As it crosses zero while moving positive (at $t = 0$ or $t = 1$ in Figure $1.2.15$), the cosine (blue) is at its positive peak. As the sine cross zero while moving negative (at $t = 0.5$), the cosine is at its negative peak. Further, the sine wave is flat with a slope of zero at its positive and negative peaks (at at $t = 0.25$ and $t = 0.75$, respectively), and at those times the cosine's amplitude is also zero. It is also true that the sine wave is the slope of the negative cosine wave, the negative cosine is the slope of the negative sine, and the negative sine is the slope of the cosine. Moving in the reverse direction, we can say that the anti-derivative (indefinite integral) of a cosine wave is a sine wave, the integral of a sine wave is a negative cosine wave, and so forth. These relationships will prove most useful when we turn our attention to the response of capacitors and inductors in AC circuits.

– Root Mean Square Measurement

Along with peak and peak-to-peak, amplitude may be given as an RMS (Root Mean Square) value. In fact, if peak or peak-to-peak is not specified, the measurement is assumed to be RMS. RMS is a special calculation used for finding equivalent DC power (very common, for example, with audio power amplifiers). In other words, if we are interested in finding the power in a resistor, the calculation must be performed using RMS values for voltage or current, not peak or peak-to-peak values. Failure to do so will result in erroneous powers. This is true regardless of the waveshape; be it a sine wave, triangle wave or the complex waves of music signals. If a voltage is specified as RMS, it can be treated for power calculations just like an equivalently sized DC voltage. For example, a 1 volt RMS sine will produce the same power dissipation and heating in a given resistor as will 1 volt DC. For this reason, RMS is sometimes referred to as the effective value (i.e., effective DC value).

The name root-mean-square describes the process of determining the effective value. First, recall that power is proportional to the square of the voltage or current. Thus, our first step will be to square the input waveform. Of course, the waveform is a function of time and its square will yield some new shape. At this point, we need to find the average value of this new shape. The reason for this is simple, yet not necessarily obvious. Electrical and electronic components have mass, and thus do not heat or cool instantly. They exhibit a thermal time constant. Therefore, they respond to the average input over time. While we could compute some manner of “instantaneous peak power” at some specific instant in time, it does not represent the equivalent DC power. Once we have obtained the mean value of this squared waveform, the corresponding DC value is just the square root of the mean. The result is a fractional value between zero and one that is used as a scaling factor to turn a peak value into an RMS value. The value will be unique to the specific waveshape. That is, all sines (regardless of phase) have the same factor, all regular triangle waves have the same factor, and so on. As we mostly concern ourselves with sines, let's take a closer look at determining the RMS factor for them.

We begin with the basic expression for a sine wave without DC offset or phase shift, and with an amplitude of one:

$$v(t) = \sin(2\pi f t)$$

The first step is to square this waveform. A useful trigonometric identity is

$$(\sin x)^2 = \frac{1}{2} - \frac{1}{2}\cos 2x$$

Applying this to our wave yields:

$$v(t)^2 = \frac{1}{2} - \frac{1}{2}\cos(2\pi 2 f t)$$

This expression describes an inverted cosine wave at twice the original frequency and half of the original amplitude, riding on a DC offset equal to its peak value. In other words, the negative peak of the cosine is at zero and the positive peak is at 1. The next step is to find the average or mean value of this intermediate result. The mean is equal to the offset of 0.5. This can be visualized as the area above the offset perfectly filling the "dip" below the offset. The final step is to take the square root of the mean. The square root of 0.5 is equal to one over the square root of two, or approximately 0.707. Therefore the RMS value is 0.707 times the peak. Alternately, you could divide the peak by square root of two, or approximately 1.414. This process is shown graphically in Figure $1.2.16$.

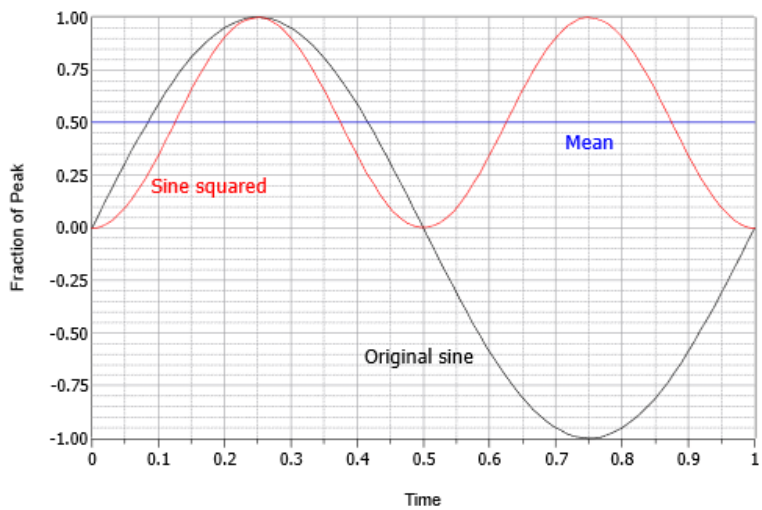

Figure $1.2.16$: Process to find RMS factor for sines.

In summation, for sine waves, RMS is always the peak value times 0.707. We could also say the RMS value of any sine wave is its peak divided by approximately 1.414. Again, these ratios would not necessarily be true of non-sine waves. Details regarding other common shapes can be found in Appendix C. Finally, the ratio of the peak value to the RMS value is called the crest ratio. This is a fixed value for sine waves (again, about 1.414), but can be over 10:1 for some kinds of audio signals.

Wavelength

Another item of interest is the speed of propagation of the wave. This varies widely. In the case of light in a vacuum (or to a close approximation, an electrical current in a wire), the velocity is about 3E8 meters per second (i.e., 300,000 km/s) or about 186,000 miles per second.

Given a velocity and a period, we can imagine how far apart the peaks of the wave are. This distance is called the wavelength and is denoted by the Greek letter lambda λ. Wavelength is equal to the velocity divided by the frequency, $\lambda = v/f$. Thus, for a loudspeaker producing a 100 Hz sine, as the velocity of sound in air is 344 m/s, then $\lambda = 344 m/s \ / \ 100$ Hz, or 3.44 meters (a little over 11 feet). Notice that the higher the frequency, the shorter the wavelength. Also, note that the faster the velocity, the longer the wavelength. Wavelength calculations are of particular importance in the fields of telecommunications and acoustics.

This page titled 1.2: Sinusoidal Waveforms is shared under a CC BY-NC-SA 4.0 license and was authored, remixed, and/or curated by James M. Fiore via source content that was edited to the style and standards of the LibreTexts platform.

1.3: Basic Fourier Analysis

The Fourier theorem, named after the French mathematician Jean-Baptiste Joseph Fourier, states that any repetitive waveform can be represented as a collection of sine and cosine waves of the proper amplitude and frequency. Alternately, it may be represented as a series of sine waves each with the proper amplitude, frequency and phase. This includes complex signals such as the human voice and musical instruments. Consequently, if a system is linear, the response of a system to a complex wave may be understood in terms of its response to individual sine waves, via superposition.

In this collection of waves, each component is known as a partial with the lowest frequency component known as the fundamental. All other partials are grouped together and referred to as overtones. “Regular” waveforms such as square waves and triangle waves feature a harmonic overtone sequence meaning that these overtones are integer multiples of the fundamental. As a shortcut, they are often referred to as just harmonics.

It might be hard to visualize initially, but like all waves, waves in the shape of a square or triangle are made up of a series of sines. The equation for a square wave is:

$$v(t) = \sum_{n=1}^{\infty} \frac{1}{2n-1} \sin((2n-1)2\pi f t) \tag{1.3.1}$$

This says that a square wave of frequency f is made up of an infinite series of sines at odd integer multiples of f, with an inverse amplitude characteristic. For example, a 100 Hz square consists of a 100 Hz sine, plus a 300 Hz sine at 1/3 amplitude, plus a 500 Hz sine at 1/5 amplitude, plus a 700 Hz sine at 1/7 amplitude, and so on.

A triangle wave is similar:

$$v(t) = \sum_{n=1}^{\infty} \frac{1}{(2n-1)^2} \cos((2n-1)2\pi f t) \tag{1.3.2}$$

Thus a triangle wave of frequency f is made up of an infinite series of cosines (sines with a 90 degree or one quarter cycle phase shift) at odd integer multiples of f, with an inverse square amplitude characteristic. For example, a 100 Hz triangle consists of a 100 Hz cosine, plus a 300 Hz cosine at 1/9 amplitude, plus a 500 Hz cosine at 1/25 amplitude, plus a 700 Hz cosine at 1/49 amplitude, and so on.

A series of graphs showing the construction of a square wave and a triangle wave follow. The square wave sequence begins with the fundamental and the first harmonic in Figure $1.3.1$. The result is an oddly bumpy wave. The second graph of Figure $1.3.2$ adds the next two harmonics. As more harmonics are added, the sides get steeper and the top/bottom start to flatten. They flatten because each additional harmonic partially cancels some of the peaks and valleys from the previous summation. This gives rise to a greater number of undulations with each undulation being smaller in amplitude. The sequence finishes with Figure $1.3.3$ showing seven harmonics being added with the result approaching a reasonable square wave. As ever more harmonics are added, the wave would approach a flat top and bottom with vertical sides, the idealized square wave.

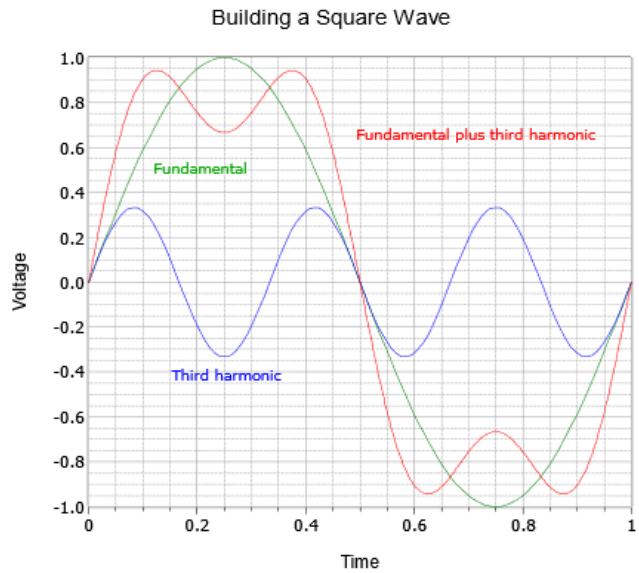

Figure 1.3.1: Building a square wave, part 1.

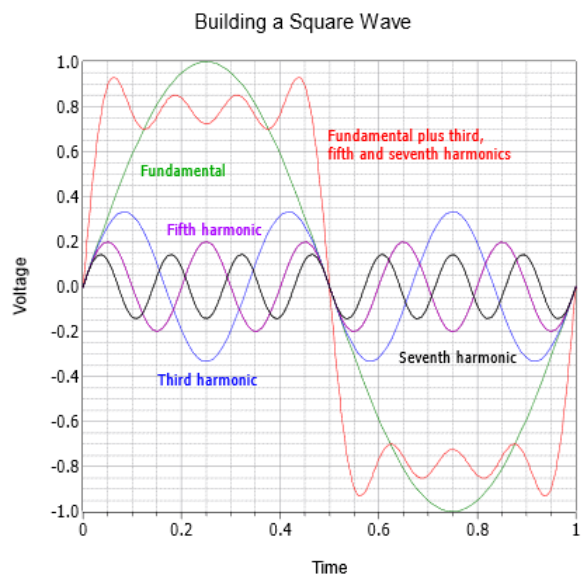

Figure 1.3.2: Building a square wave, part 2.

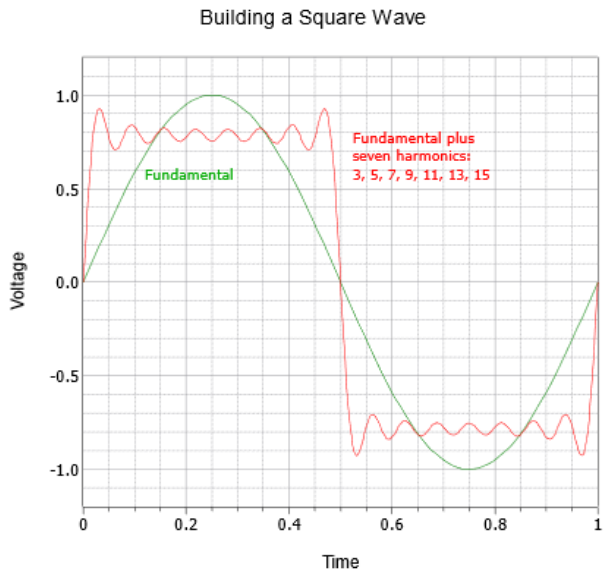

Figure 1.3.3: Building a square wave, part 3.

The triangle sequence begins with a fundamental and the first harmonic as shown in Figure 1.3.4. The resulting combination is already trending away from a simple sine shape. The second and final graph, Figure 1.3.5, shows a total of seven harmonics. The result is very close to a triangle, the only obvious deviation is the slight rounding at the very peaks. The addition of more harmonics would cause these to sharpen further.

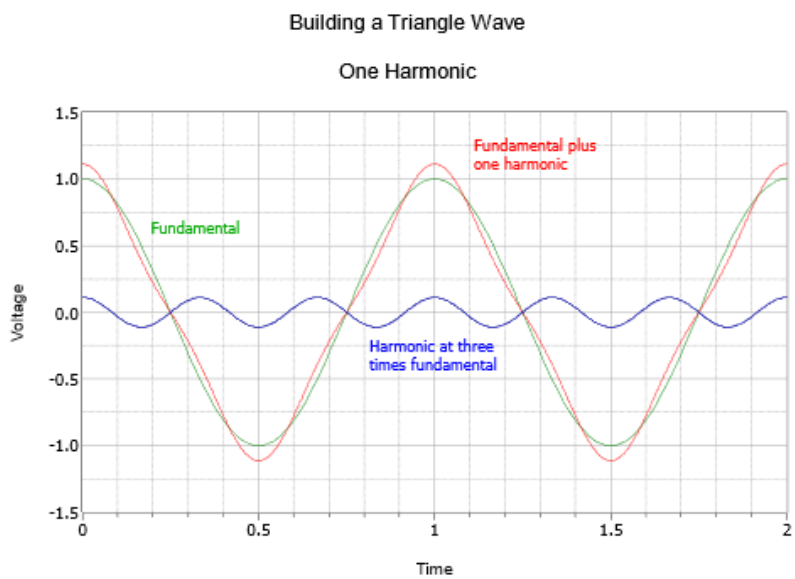

Figure 1.3.4: Building a triangle wave, part 1.

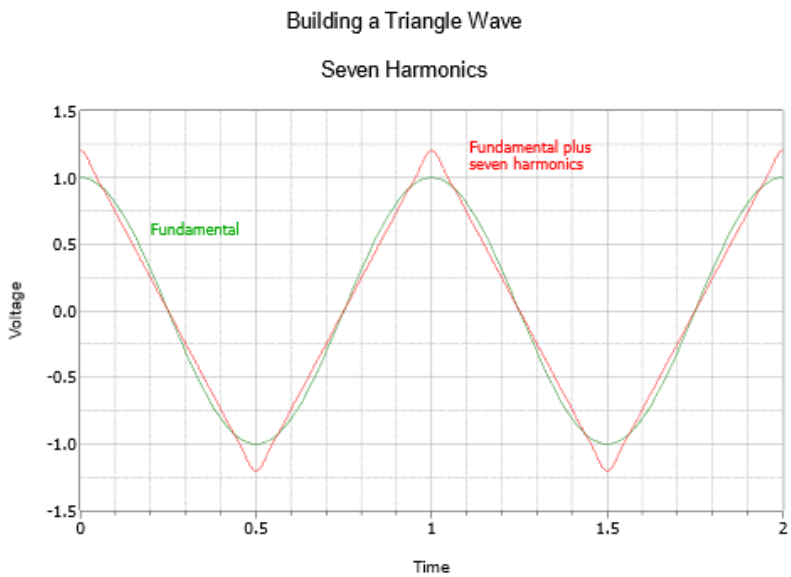

Figure 1.3.5: Building a triangle wave, part 2.

This page titled 1.3: Basic Fourier Analysis is shared under a CC BY-NC-SA 4.0 license and was authored, remixed, and/or curated by James M. Fiore via source content that was edited to the style and standards of the LibreTexts platform.

1.4: Complex Numbers

In AC circuits, parameters such as voltage and current are vectors, that is, they have both a magnitude and a phase shift or angle. For example, a voltage might be “12 volts at an angle of 30 degrees” (or more compactly, $12\angle 30^\circ$). This is known as polar form or magnitude-angle form. Alternately, a vector can be broken into rectangular form, that is, its right angle components.

This can be visualized as a right triangle where the magnitude is the hypotenuse, the angle is the rotation above or below the horizontal, the horizontal component is the side adjacent to the angle and the vertical component is the side opposite of the angle. This is shown in Figure $1.4.1$.

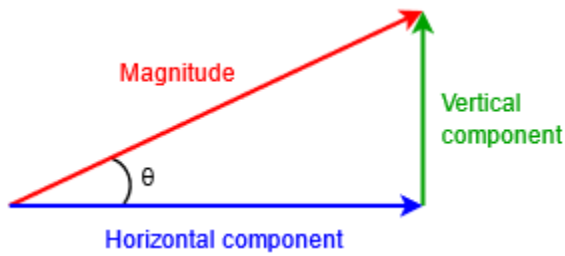

Figure $1.4.1$: Polar and rectangular forms.

Properly, voltage and current vectors are complex numbers that lay on a complex plane consisting of a real part and an imaginary part. The horizontal axis is the real number axis and the vertical axis is the imaginary number axis. The imaginary axis denotes values times the imaginary operator j (and often referred to as i outside of electrical analysis). The j operator is the square root of –1. An example of such a value is $3 + j4$, in other words, 3 units along the horizontal real axis and 4 units up the vertical imaginary axis. This is depicted in Figure $1.4.2$.

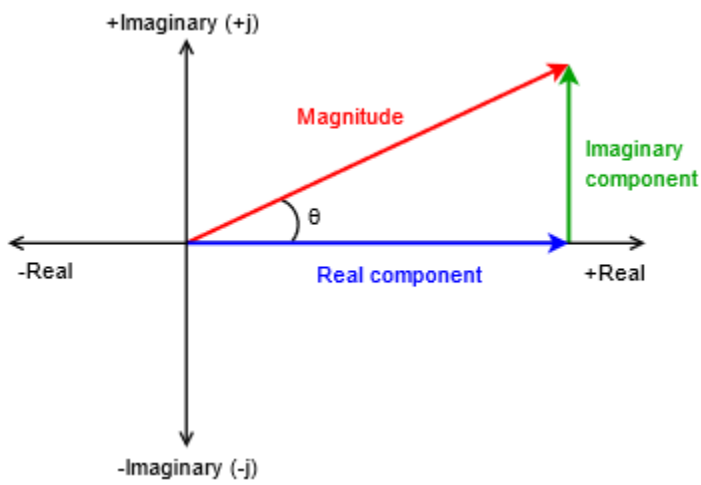

Figure $1.4.2$: Polar and rectangular forms on the complex plane.

Converting from one form to another relies on basic trigonometric relations. For convenience, the relationships between the magnitude, angle, real component and imaginary component are reproduced below:

$$\text{Magnitude } = \sqrt{\text{Real}^2 + \text{Imaginary}^2} \tag{1.4.1}$$

$$\theta = \tan^{-1} \frac{\text{Imaginary}}{\text{Real}} \tag{1.4.2}$$

$$\text{Real } = \text{ Magnitude } \cos\theta \tag{1.4.3}$$

$$j\text{Imaginary } = \text{ Magnitude } \sin\theta \tag{1.4.4}$$

To add or subtract complex quantities, first put them into rectangular form and then combine the reals with the reals and the j

terms with the j terms as in $(3+j5)+(13-j1)=16+j4$. These real and imaginary terms must be kept separate. $3+j5$ does not equal 8 (or even $j8$). That would be like saying that moving 3 feet to your right and 5 feet forward puts you in the same location as moving 8 feet to your right (or 8 feet forward).

The direct way to multiply or divide complex values is to first put them in polar form and then multiply or divide the magnitudes. The angles are added together for multiplication and subtracted for division. For example, $12\angle 30^\circ$ times $2\angle 45^\circ$ is $24\angle 75^\circ$ while dividing them yields $6\angle -15^\circ$. The need for complex numbers will become more obvious as we move through the upcoming material. It is imperative that you have mastered the manipulation of complex values before moving on to subsequent chapters.

Example 1.4.1

Convert $15+j20$ and $1k-j2k$ into polar form, and $10\angle 45^\circ$ and $0.2\angle -30^\circ$ into rectangular form.

For the first two conversions, use Equations 1.4.1 and 1.4.2.

$$\text{Magnitude } = \sqrt{15^2+20^2} = 25$$

$$\theta = \tan^{-1}\left(\frac{20}{15}\right) = 53.1^\circ$$

$$\text{Magnitude } = \sqrt{1k^2+(-2k)^2} = 2.236k$$

$$\theta = \tan^{-1}\left(\frac{-2k}{1k}\right) = -63.4^\circ$$

The answers for the first part are $25\angle 53.1^\circ$ and $2.236k\angle -63.4^\circ$.

For the second pair of conversions use Equations 1.4.3 and 1.4.4.

$$\text{Real } = 10\cos 45^\circ = 7.07$$

$$j\text{Imaginary } = 10\sin 45^\circ = j7.07$$

$$\text{Real } = 0.2\cos -30^\circ = 0.173$$

$$j\text{Imaginary } = 0.2\sin -30^\circ = -j0.1$$

The answers for the second part are $7.07+j7.07$ and $0.173-j0.1$.

Example 1.4.2

a) Add $7+j8 to +j6$, b) Subtract $5\angle 53.1^\circ$ from $10\angle -45^\circ$, c) Divide $20\angle 90^\circ$ by $4\angle -50^\circ$, d) Multiply $90+j75$ by $6+j10$.

a) Add real to real and imaginary to imaginary: $7+j14$.

b) First convert the values into rectangular: $3+j4$ and $7.07-j7.07$. Now subtract the first pair from the second pair: $4.07-j11.07$ (or $11.8\angle -69.8^\circ$).

c) Divide the magnitudes and subtract the angles: $5\angle 140^\circ$.

d) First convert the values into polar: $117.15\angle 39.8^\circ$ and $11.66\angle 59^\circ$. Now multiply the magnitudes and add the angles: $1.366k\angle 98.8^\circ$.

This page titled 1.4: Complex Numbers is shared under a CC BY-NC-SA 4.0 license and was authored, remixed, and/or curated by James M. Fiore via source content that was edited to the style and standards of the LibreTexts platform.

1.5: Reactance and Impedance

Unlike a resistor, the voltage and current will not be in phase for an ideal capacitor or for an ideal inductor. For the capacitor, the current leads the voltage across the capacitor by 90 degrees. Recall that the voltage across a capacitor cannot change instantaneously, $i = C\ dv/dt$. For an inductor, the voltage leads the current by 90 degrees. Similarly, the current through an inductor cannot change instantaneously due to $v = L\ di/dt$. While ideal capacitors and inductors do not exhibit resistance, the voltage does react to the current. Unsurprisingly, we call this characteristic reactance and denote it with the letter X. Reactance, like resistance, is a ratio of voltage to current. We define capacitive reactance as:

$$X_C = \frac{v_c}{i_c} \tag{1.5.1}$$

Using a simple sine wave with a peak value of unity, $v_c = \sin 2\pi ft$, i_c can be found from $i = C\ dv/dt$. Recall from our prior work that the derivative or slope of a sine wave is a cosine wave, which is in turn equivalent to a sine wave shifted by +90°.

$$i_c = C\frac{dv_c}{dt}$$

$$i_c = C\frac{d\sin(2\pi ft)}{dt}$$

$$i_c = C\sin(2\pi ft + 90^\circ)$$

Substituting this result into Equation 1.7 yields:

$$X_C = \frac{v_c}{i_c}$$

$$X_C = \frac{\sin(2\pi ft)}{2\pi fC\sin(2\pi ft + 90^\circ)}$$

$$X_C = \frac{1}{2}\pi fC\angle -90^\circ$$

Or more directly:

$$X_C = -j\frac{1}{2\pi fC} \tag{1.5.2}$$

In summation, if we divide the capacitor's sinusoidal voltage by its current (Ohm's law), we obtain a value with a phase angle of −90°. While the resultant is an ohmic value, it cannot be classified as a resistance. Instead, it is referred to as a reactance and denoted with the letter X. Thus we can refer to a capacitor's reactance, X_C, as some number at an angle of −90°, or more conveniently, we simply prepend $-j$, as in $X_C = -j75\Omega$.

The case for the inductor is similar and left as an exercise. The inductive reactance, X_L, can be found using:

$$X_L = +j2\pi fL \tag{1.5.3}$$

An example would be $X_L = j68\Omega$. As stated, while a resistance cannot be added directly to a reactance, reactances can be added together so long as we heed the signs. For example, if we have a capacitive reactance of $-j60\Omega$ in series with an inductive reactance of $j100\Omega$, the result is $j40\Omega$. This is due to the fact that these two items are 180 degrees out of phase with each other, and so they partially cancel. Remember, always add or subtract like items: real (resistance) to real, and imaginary (reactance) to imaginary.

Equations 1.5.2 and 1.5.3 are notable because the reactance is not just a function of the capacitance or inductance, but also a function of frequency. The reactance of an inductor is directly proportional to frequency while the reactance of a capacitor is inversely proportional to frequency. The ohmic variations of a 20Ω resistor, a 500 μF capacitor and a 500 μH inductor across frequency are shown in Figure 1.5.1.

We can see that the value of resistance does not change with frequency while the inductive reactance increases with frequency

and the capacitive reactance decreases.

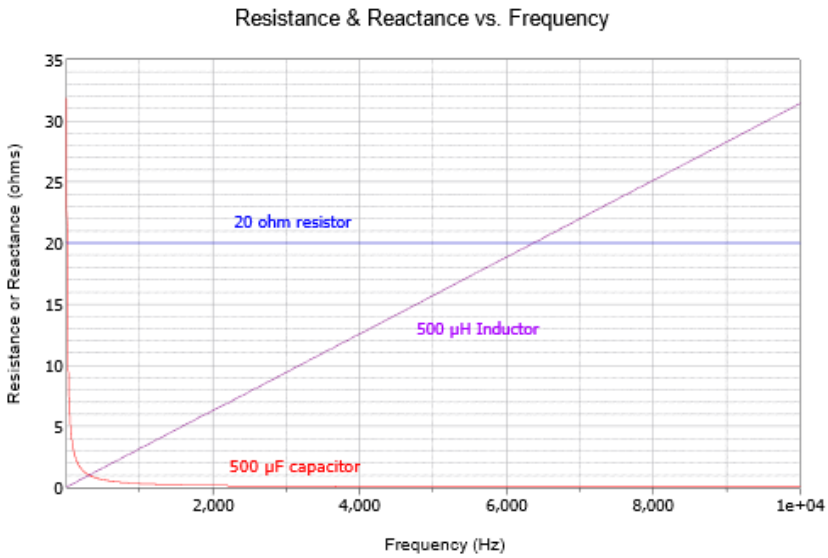

Figure 1.5.1: Resistance and reactance versus frequency (linear axis).

The linear frequency scale makes the capacitor change difficult to see. If this is plotted again but using a logarithmic frequency scale as in Figure 1.5.2, the symmetry becomes apparent.

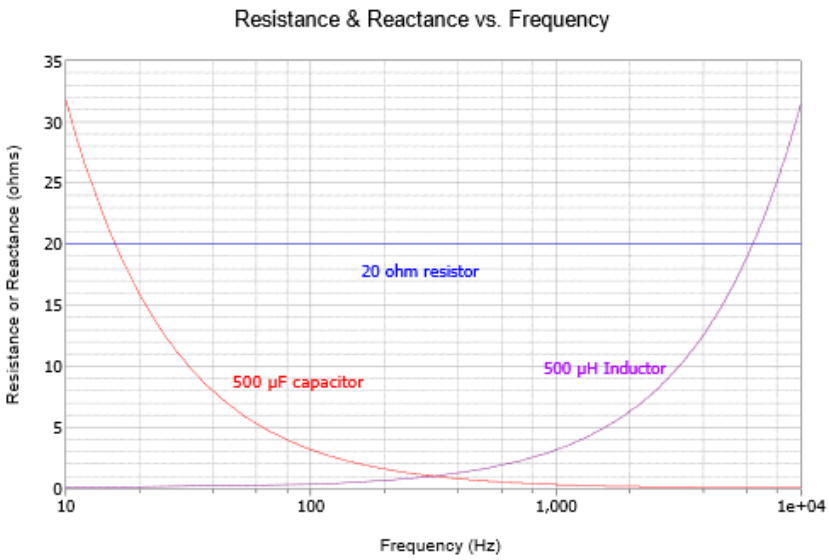

Figure 1.5.2: Resistance and reactance versus frequency (log axis).

The effect of both capacitor size and frequency is shown in Figure 1.5.3 using a log frequency axis: the smaller the capacitor, the larger the capacitive reactance at any particular frequency.

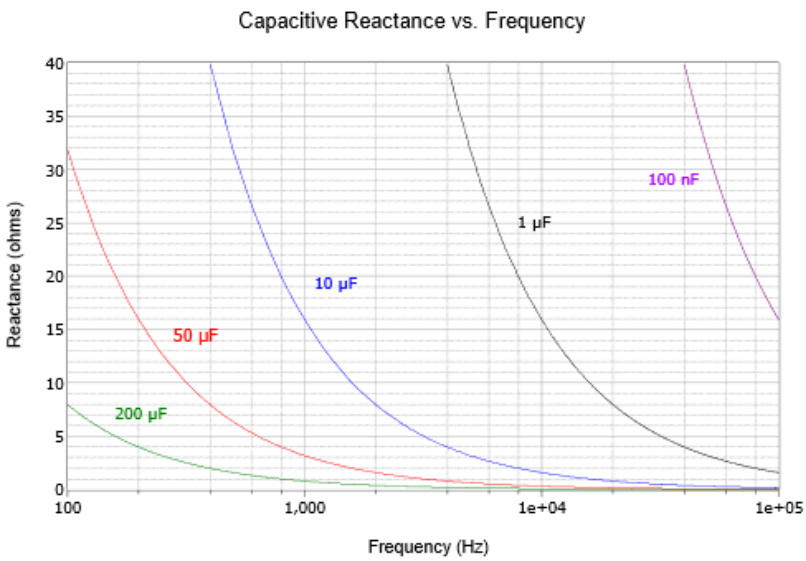

Figure 1.5.3: Variation of capacitive reactance with capacitance and frequency.

Similarly, the effect of both inductor size and frequency is shown in Figure 1.5.4 using a linear frequency axis: the larger the inductor, the larger the inductive reactance at any given frequency.

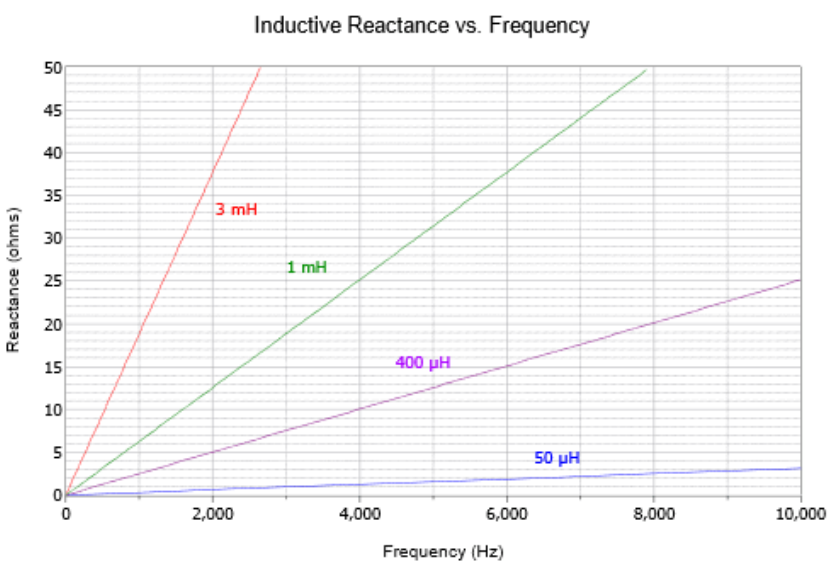

Figure 1.5.4: Variation of inductive reactance with inductance and frequency.

It is worth noting that the plots of Figures 1.5.3 and 1.5.4 are for ideal components. In reality, all components exhibit some resistive, capacitive and inductive effects due to their construction. For example, eventually, inductive and resistive effects will cause the capacitive reactance curves of Figure 1.5.3 to begin to rise at high frequencies. Similarly, resistive and capacitive effects will cause the curves Figure 1.5.4 to flatten at very low and very high frequencies.

An interesting observation to remember is that capacitors and inductors are a bit like a Chimera. That is, they look like different things to different sources, all mashed together at once. It would be improper to think of, say, a particular inductor as being “so many ohms”. If the source signal is comprised of multiple sine waves, such as a square wave or a music waveform, the inductor “looks like” a different ohmic value to each of the different frequency components, simultaneously. This is an important concept and one that we can take great advantage of, for example, in the design of filter circuits.

Impedance

We now arrive at impedance. Impedance is a mixture of resistance and reactance, and is denoted by Z. This can be visualized as a series combination of a resistor and either a capacitor or an inductor. Examples include $Z = 100 - j50\Omega$, i.e., 100 ohms of resistance in series with 50 ohms of capacitive reactance; and $Z = 600\angle 45^{\circ}\Omega$, i.e., a magnitude of 600 ohms that includes resistance and inductive reactance (it must be inductive reactance and not capacitive reactance because the sign of the angle is positive).

To complete this system, we have susceptance and admittance. Susceptance, S, is the reciprocal of reactance. Admittance, Y, is the reciprocal of impedance. These are similar to the relation between conductance and resistance, and are convenient for parallel circuit combinations.

Example 1.5.1

Determine the reactances of a 1 mH inductor and a 2 μF capacitor to a sine wave of 2 kHz. Repeat for a frequency of 50 kHz.

Use Equations 1.5.2 and 1.5.3. For the capacitor at 2 kHz we have:

$$X_C = -j\frac{1}{2\pi fC}$$

$$X_C = -j\frac{1}{2\pi 1kHz2\mu F}$$

$$X_C = -j79.6\Omega$$

For the second source, 50 kHz is 25 times larger than the original and capacitive reactance is inversely proportional to frequency. Therefore X_C is 25 times smaller, or $-j3.18\Omega$.

For the inductor at 2 kHz,

$$X_L = +j2\pi fL$$

$$X_L = +j2\pi 2kHz1mH$$

$$XL = +j12.57\Omega$$

Inductive reactance is directly proportional to frequency. Thus, increasing f by a factor of 25 increases X_L by the same factor, resulting in $j314.2\Omega$.

Example 1.5.2

Determine the susceptance of an inductor whose reactance is $j400\Omega$. Further, if this inductor is placed in series with a 1000Ω resistor, determine the resulting impedance in polar form, as well as the admittance.

Susceptance is the reciprocal of reactance.

$$S_L = \frac{1}{X_L}$$

$$S_L = \frac{1}{j400\Omega}$$

$$S_L = -j2.5 \text{ millisiemens}$$

The impedance, Z, is the vector sum, or $1000 + j400\Omega$. Converting this to polar form:

$$\text{Magnitude } = \sqrt{\text{Real}^2 + \text{Imaginary}^2}$$

$$\text{Magnitude } = \sqrt{1000^2 + 400^2}$$

$$\text{Magnitude } = 1077$$

$$\theta = \tan^{-1}\left(\frac{\text{Imaginary}}{\text{Real}}\right)$$

$$\theta = \tan^{-1}\left(\frac{400}{1000}\right)$$

$$\theta = 21.8^\circ$$

The result is $Z = 1077\angle 21.8^\circ \Omega$. The admittance is the reciprocal, yielding $Y = 928E-6\angle -21.8^\circ \mu S$.

This page titled 1.5: Reactance and Impedance is shared under a CC BY-NC-SA 4.0 license and was authored, remixed, and/or curated by James M. Fiore via source content that was edited to the style and standards of the LibreTexts platform.

1.6: Phasor Diagrams

A time domain representation of sine waves as drawn earlier tells us everything we need to know about the waves, however it is not the most compact method of displaying them, nor are they easy to sketch by hand. Consider the the plot of Figure $1.6.1$. Here, two sine waves (green and red) combine to create a third sine wave (blue). While the general idea of the two waves adding is apparent in the graph, it takes a moment of inspection to determine the wave magnitudes and the precise phase relationships between them. In contrast, phasor diagrams can be used to show the relationships of multiple sines waves in a simple and easy to read format. They can also be used to show how various voltages or currents combine.

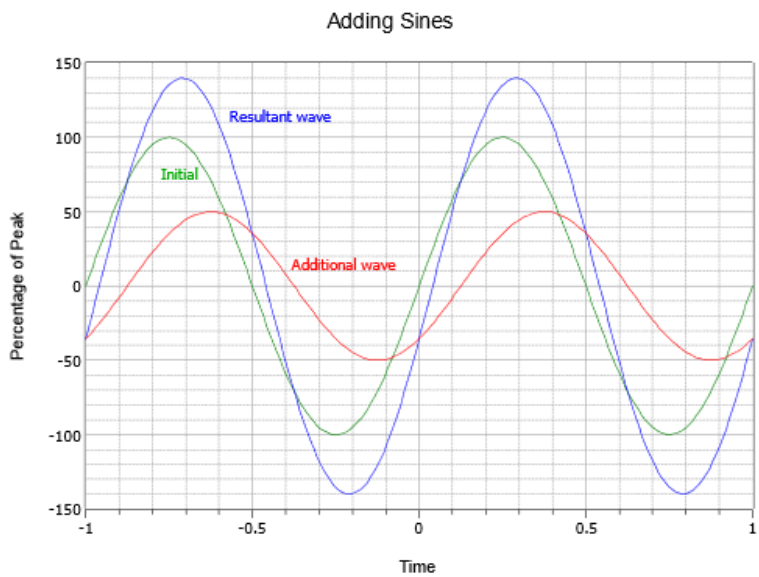

Figure $1.6.1$: A time domain plot.

The phasor diagram is based on the complex plane discussed previously where the horizontal is the real axis and the vertical is the imaginary (j) axis. The magnitude and phase of each wave can then be drawn as a vector, and the relationships between the waves is shown directly. For manual plotting, it is convenient to convert from polar form to rectangular form. In the example phasor diagram of Figure $1.6.2$, two vectors are shown: $8 + j6$ and $5 - j3$ (equivalent to $10\angle 36.9^\circ$ and $5.83\angle -31^\circ$). Phasor diagrams can be used to plot voltages, currents and impedances. We shall make considerable use of them in upcoming chapters.

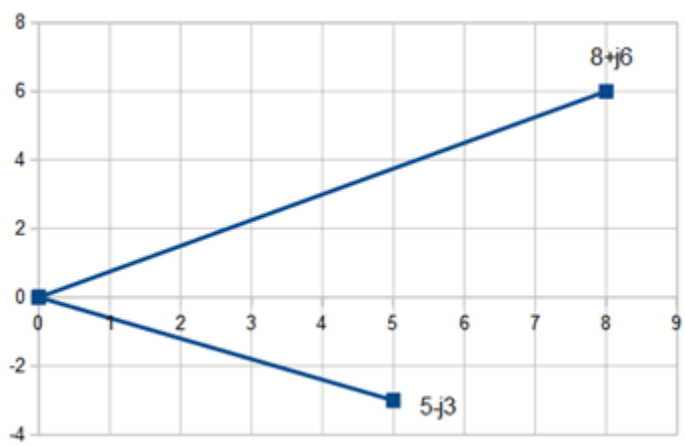

Figure $1.6.2$: A phasor diagram.

This page titled 1.6: Phasor Diagrams is shared under a CC BY-NC-SA 4.0 license and was authored, remixed, and/or curated by James M. Fiore via source content that was edited to the style and standards of the LibreTexts platform.

1.7: Summary

The most simple of AC waveforms is the sine wave. It can be thought of as the vertical displacement of a vector rotating at a constant speed, like the second hand of a clock. The length of the second hand represents the height or amplitude of the sine wave and the speed of rotation represents its period. As the speed tends to be very fast, it is more convenient for us to use frequency, which is just the reciprocal of the period. Sines can be displaced vertically, which is also called a DC offset, as well as having a horizontal or time shift. When expressed relative to a single cycle, this change is referred to as the phase shift. Finally, waveforms such as square waves, triangle waves and even more complex waveforms such as voice or music can be described in terms of combinations of sounds. Indeed, Fourier analysis tells us that any repeating waveform can be described as a series of sines each with the appropriate frequency, amplitude and phase shift. In order to determine the "effective DC value" of a sine wave, that is, the value that produces the same power dissipation, RMS values are used. The RMS value of a sine wave is its peak value divided by the square root of two (approximately equal to 0.707 of peak).

Complex numbers are used to describe AC voltages and currents, among other things. They consist of two parts: a real part and an imaginary part that is plotted perpendicular to the real part. All mathematical operations on complex numbers must follow vector rules. This includes basic trigonometric operations.

Reactance can be thought of as the imaginary axis version of resistance. That is, it restricts current flow. The difference is that there is a 90 degree phase shift between the current and voltage through a reactive element while the two are in phase for resistive elements. Capacitive reactance is inversely proportional to frequency while inductive reactance is directly proportional to frequency. The combination of resistance and reactance is known as impedance. Phasor diagrams may be used to plot the components of a complex impedance as well as show the relations between voltages or currents in a circuit.

Review Questions

1. What is a sine wave? Describe its constituent parameters (amplitude, frequency, offset, etc.).

2. What is the relationship between the frequency, period and phase of a sine wave?

3. What is the mathematical relationship between a sine wave and a cosine wave?

4. What is meant by the term RMS (root-mean-square) and what does it have to do with AC versus DC voltages, currents and powers?

5. Describe the difference between a scalar and a vector.

6. What is a complex number?

7. Detail the relationships between resistance, reactance, impedance, conductance, susceptance and admittance.

8. Describe how capacitive reactance varies with frequency.

9. Describe how inductive reactance varies with frequency.

10. Describe a phasor diagram.

This page titled 1.7: Summary is shared under a CC BY-NC-SA 4.0 license and was authored, remixed, and/or curated by James M. Fiore via source content that was edited to the style and standards of the LibreTexts platform.

1.8: Exercises

Analysis

1. Determine the AC peak and RMS voltages, DC offset, frequency, period and phase shift for the following expression: $v(t) = 10 \sin 2\pi 1000t$

2. Determine the AC peak and RMS voltages, DC offset, frequency, period and phase shift for the following expression: $v(t) = 0.4 \sin 2\pi 5000t$

3. Determine the peak AC portion voltage, DC offset, frequency, period and phase shift for the following expression: $v(t) = -3 + 20 \sin 2\pi 50t$

4. Determine the peak AC portion voltage, DC offset, frequency, period and phase shift for the following expression: $v(t) = 12 + 2 \sin 2\pi 20000t$

5. Determine the AC peak and RMS voltages, DC offset, frequency, period and phase shift for the following expression: $v(t) = 10 \sin(2\pi 100t + 45^\circ)$

6. Determine the AC peak and RMS voltages, DC offset, frequency, period and phase shift for the following expression: $v(t) = 5 \sin(2\pi 1000t - 90^\circ)$

7. Determine the peak AC portion voltage, DC offset, frequency, period and phase shift for the following expression: $v(t) = 10 + 1 \sin(2\pi 400t - 45^\circ)$

8. Determine the peak AC portion voltage, DC offset, frequency, period and phase shift for the following expression: $v(t) = 10 + 10 \sin(2\pi 5000t + 30^\circ)$

9. A 1 kHz sine wave has a phase of 72°. Determine the time delay. Repeat for a 20 kHz sine wave.

10. A 2 kHz sine wave has a phase of 18°. Determine the time delay. Repeat for a 100 kHz sine wave.

11. An oscilloscope measures a time delay of 0.2 milliseconds between a pair of 500 Hz sine waves. Determine the phase shift.

12. An oscilloscope measures a time delay of –10 microseconds between a pair of 20 kHz sine waves. Determine the phase shift.

13. Convert the following from rectangular to polar form:

a) $10 + j10$

b) $5 - j10$

c) $-100 + j20$

d) $3k + j4k$

14. Convert the following from rectangular to polar form:

a) $2k + j1.5k$

b) $8 - j8$

c) $-300 + j300$

d) $-1k - j1k$

15. Convert these from polar to rectangular form:

a) $10\angle 45^\circ$

b) $0.4\angle 90^\circ$

c) $-9\angle 60^\circ$

d) $100\angle -45^\circ$

16. Convert these from polar to rectangular form:

a) $-4\angle 60^\circ$

b) $-0.9\angle 30^\circ$

c) $5\angle 120^\circ$

d) $6\angle -135^\circ$

17. Perform the following computations:

a) $(10 + j10) + (5 + j20)$

b) $(5 + j2) + (-5 + j2)$

c) $(80 - j2) - (100 + j2)$

d) $(-65 + j50) - (5 - j200)$

18. Perform the following computations:

a) $(100 + j200) + (75 + j210)$

b) $(-35 + j25) + (15 + j8)$

c) $(500 - j70) - (200 + j30)$

d) $(-105 + j540) - (5 - j200)$

19. Perform the following computations:

a) $(100 + j200) \cdot (75 + j210)$

b) $(-35 + j25) \cdot (15 + j8)$

c) $(500 - j70)/(200 + j30)$

d) $(-105 + j540)/(5 - j200)$

20. Perform the following computations:

a) $(10 + j10) \cdot (5 + j20)$

b) $(5 + j2) \cdot (-5 + j2)$

c) $(80 - j2)/(100 + j2)$

d) $(-65 + j50)/(5 - j200)$

21. Perform the following computations:

a) $(10\angle 0^\circ) \cdot (10\angle 0^\circ)$

b) $(5\angle 45^\circ)\cdot(-2\angle 20^\circ)$

c) $(20\angle 135^\circ)/(40\angle -10^\circ)$

d) $(8\angle 0^\circ)/(32\angle 45^\circ)$

22. Perform the following computations:

a) $(0.3\angle 0^\circ)\cdot(3\angle 180^\circ)$

b) $(5\angle -45^\circ)\cdot(-4\angle 20^\circ)$

c) $(0.05\angle 95^\circ)/(0.04\angle -20^\circ)$

d) $(500\angle 0^\circ)/(60\angle 225^\circ)$

23. Perform the following computations:

a) $(0.3\angle 0^\circ)+(3\angle 180^\circ)$

b) $(5\angle -45^\circ)+(-4\angle 20^\circ)$

c) $(0.05\angle 95^\circ)-(0.04\angle -20^\circ)$

d) $(500\angle 0^\circ)-(60\angle 225^\circ)$

24. Perform the following computations:

a) $(10\angle 0^\circ)+(10\angle 0^\circ)$

b) $(5\angle 45^\circ)+(-2\angle 20^\circ)$

c) $(20\angle 135^\circ)-(40\angle -10^\circ)$

d) $(8\angle 0^\circ)-(32\angle 45^\circ)$

25. Determine the capacitive reactance of a 1 μF capacitor at the following frequencies:

a) 10 Hz

b) 500 Hz

c) 10 kHz

d) 400 kHz

e) 10 MHz

26. Determine the capacitive reactance of a 220 pF capacitor at the following frequencies:

a) 10 Hz

b) 500 Hz

c) 10 kHz

d) 400 kHz

e) 10 MHz

27. Determine the capacitive reactance at 50 Hz for the following capacitors:

a) 10 pF

b) 470 pF

c) 22 nF

d) 33 μF

28. Determine the capacitive reactance at 1 MHz for the following capacitors:

a) 22 pF

b) 560 pF

c) 33 nF

d) 4.7 μF

29. Determine the inductive reactance of a 100 mH inductor at the following frequencies:

a) 10 Hz

b) 500 Hz

c) 10 kHz

d) 400 kHz

e) 10 MHz

30. Determine the inductive reactance of a 100 mH inductor at the following frequencies:

a) 10 Hz

b) 500 Hz

c) 10 kHz

d) 400 kHz

e) 10 MHz

31. Determine the inductive reactance at 1 kHz for the following inductors:

a) 10 mH

b) 500 mH

c) 10 μH

d) 400 μH

32. Determine the inductive reactance at 500 kHz for the following inductors:

a) 1 mH

b) 40 mH

c) 2 μH

d) 50 μH

33. Draw phasor diagrams for the following:

a) $5 + j2$

b) $-10 - j20$

c) $8\angle 45^\circ$

d) $2\angle -35^\circ$

34. Draw phasor diagrams for the following:

a) $60j - 20$

b) $-40 + j500$

c) $0.05\angle -45^\circ$

d) $-15\angle 60^\circ$

35. The fundamental of a certain square wave is a 5 volt peak, 1 kHz sine. Determine the amplitude and frequency of each of the next five harmonics.

36. The fundamental of a certain triangle wave is a 10 volt peak, 100 Hz sine. Determine the amplitude and frequency of each of the next five harmonics.

Design

37. Determine the capacitance required for the following reactance values at 1 kHz:

a) 560 Ω

b) 330 kΩ

c) 470 kΩ

d) 1.2 kΩ

e) 750 Ω

38. Determine the capacitance required for the following reactance values at 20 Hz:

a) 56 kΩ

b) 330 kΩ

c) 470 kΩ

d) 1.2 kΩ

e) 750 Ω

39. Determine the inductance required for the following reactance values at 100 MHz:

a) 560 Ω

b) 330 kΩ

c) 470 kΩ

d) 1.2 kΩ

e) 750 Ω

40. Determine the inductance required for the following reactance values at 25 kHz:

a) 56 Ω

b) 33 kΩ

c) 470 kΩ

d) 1.2 kΩ

e) 750 Ω

41. Which of the following have a reactance of less than 100 Ω for all frequencies below 1 kHz?

a) 2 mH

b) 99 mH

c) 470 pF

d) 10000 μF

42. Which of the following have a reactance of less than 8 Ω for all frequencies above 10 kHz?

a) 10 nH

b) 5 mH

c) 56 pF

d) 470 μF

43. Which of the following have a reactance of at least 1k Ω for all frequencies above 20 kHz?

a) 2 mH

b) 200 mH

c) 680 pF

d) 33 μF

44. Which of the following have a reactance of at least 75 Ω for all frequencies below 5 kHz?

a) 680 μH

b) 10 mH

c) 82 pF

d) 33 nF

Challenge

45. Determine the negative and positive peak voltages, RMS voltage, DC offset, frequency, period and phase shift for the following expression: $v(t) = -10\sin(2\pi 250t + 180^\circ)$

46. Determine the negative and positive peak voltages, DC offset, frequency, period and phase shift for the following expression: $v(t) = 1 - 100 \sin 2\pi 50000t$

47. Assume you have a DC coupled oscilloscope set as follows: time base = 100 microseconds/division, vertical sensitivity = 1 volt/division. Sketch the display of this waveform: $v(t) = 2 + 3 \sin 2\pi 2000t$

48. Assume you have a DC coupled oscilloscope set to the following: time base = 20 microseconds/division, vertical sensitivity = 200 millivolts/division. Sketch the display of this waveform: $v(t) = -0.2 + 0.4 \sin 2\pi 10000t$

49. A 200 Ω resistor is in series with a 1 mH inductor. Determine the impedance of this combination at 200 Hz and at 20 kHz.

50. A 1 kΩ resistor is in series with an inductor. If the combined impedance at 10 kHz is $1.41k\angle 45^\circ$, determine the inductance in mH.

This page titled 1.8: Exercises is shared under a CC BY-NC-SA 4.0 license and was authored, remixed, and/or curated by James M. Fiore via source content that was edited to the style and standards of the LibreTexts platform.

2: SERIES RLC CIRCUITS

Learning Objectives

After completing this chapter, you should be able to:

- Utilize Kirchhoff's voltage law, the voltage divider rule and Ohm's law to find node and component voltages in series RLC networks that utilize voltage sources or a single current source.
- Compute complex impedance and system current in series RLC circuits.
- Draw phasor diagrams for impedance and component voltages in series RLC circuits.

2.1: Introduction

2.2: The Series Connection

2.3: Series Impedance

2.4: Series Circuit Analysis

2.5: Concerning Practical Inductors

2.6: Summary

2.7: Exercises

This page titled 2: Series RLC Circuits is shared under a CC BY-NC-SA 4.0 license and was authored, remixed, and/or curated by James M. Fiore via source content that was edited to the style and standards of the LibreTexts platform.

2.1: Introduction

In this chapter we introduce series RLC circuits for the AC case. There is much here that will be familiar from your prior studies with DC series circuits, however, there will be a few notable changes and perhaps a surprise or two lurking. The key to most of this is to remember that all computations involve vector quantities. In fact, DC can be thought of as a special case of AC; namely, the frequency drops to zero hertz causing X_C to approach an open and X_L to drop to zero. This leaves us with just resistors and scalar quantities because the phase angles in the remainder of the circuit collapse to zero for DC steady state.

Many of the solution techniques from DC analysis will be applicable here. This includes the use of Ohm's law and Kirchhoff's voltage law, along with the voltage divider rule. Generally, reactance values will need to be computed from capacitor and inductor values before the main analysis may begin. In this chapter, as in the most of the remaining chapters, we shall be concerned with determining the circuit response based on a source with a single frequency of excitation, in other words, a simple sine wave.

To clarify our analyses, we shall make considerable use of both time domain voltage plots as well as phasor diagrams.

This page titled 2.1: Introduction is shared under a CC BY-NC-SA 4.0 license and was authored, remixed, and/or curated by James M. Fiore via source content that was edited to the style and standards of the LibreTexts platform.

2.2: The Series Connection

A series connection is always characterized by a single loop or path for current flow. There are no junctions from which current can flow out of or into. Consequently,

$$\text{The current is the same everywhere in a series connection.}$$

Each component in such a loop will see the same current, regardless of whether it is a resistor, capacitor or inductor. Before component voltages can be determined, the capacitive and inductive reactance values must be computed from the capacitor and inductor values, based on the frequency of the driving source. Consequently, if this frequency were to change, the reactances would change, and this would in turn cause changes in the circulating current and component voltages.

This page titled 2.2: The Series Connection is shared under a CC BY-NC-SA 4.0 license and was authored, remixed, and/or curated by James M. Fiore via source content that was edited to the style and standards of the LibreTexts platform.

2.3: Series Impedance

Perhaps the first practical issue we face is determining the effective impedance of an RLC series loop. For starters, resistors in series simply add. Reactances also add but we must be careful of the sign. Inductive reactance and capacitive reactance will partially cancel each other. Thus, the impedance in rectangular form is the sum of the resistive components for the real portion, plus the sum of the reactances for the imaginary (j) portion. We will often find it convenient to express this value in polar form.

Example $2.3.1$

What is the impedance of the network shown in Figure $2.3.1$ at a frequency of 15 kHz?

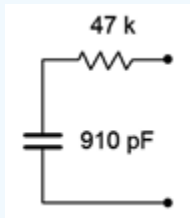

Figure $2.3.1$: Circuit for Example $2.3.1$.

First we need to find the capacitive reactance value.

$$X_C = -j\frac{1}{2\pi fC}$$

$$X_C = -j\frac{1}{2\pi 15kHz910pF}$$

$$X_C = -j11.66k\Omega$$

As there is only one resistor and one capacitor, the result in rectangular form is $47k - j11.66k\Omega$. In polar form this is:

$$\text{Magnitude } = \sqrt{\text{Real}^2 + \text{Imaginary}^2}$$

$$\text{Magnitude } = \sqrt{47k^2 + (-11.66k)^2}$$

$$\text{Magnitude } = 48.42k$$

$$\theta = \tan^{-1}\left(\frac{\text{Imaginary}}{\text{Real}}\right)$$

$$\theta = \ tan^{-1}\left(\frac{-11.66k}{47k}\right)$$

$$\theta = -13.9^\circ$$

That is, in polar form $Z = 48.42E3\angle -13.9^\circ\Omega$.

Example $2.3.2$

Determine the effective impedance of the circuit shown in Figure $2.3.2$ if the source frequency is 2 kHz. Repeat this for source frequencies of 200 Hz and 20 kHz. Finally, express the results in both rectangular and polar form.

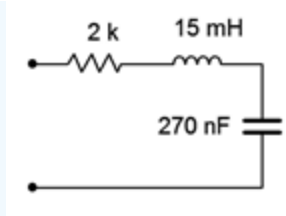

Figure 2.3.2: Circuit for Example 2.3.2.

The first step is to find the reactance values at 2 kHz.

$$X_L = j2\pi fL$$

$$X_L = j2\pi 2000Hz15mH$$

$$X_L = j188.5\Omega$$

$$X_C = -j\frac{1}{2\pi fC}$$

$$X_C = -j\frac{1}{2\pi 2000Hz270nF}$$

$$X_C = -j294.7\Omega$$

Combine reals with reals and j terms with j terms.

$$Z = R + jX_L - jX_C$$

$$Z = 500 + j188.5 - j294.7\Omega$$

$$Z \approx 500 - j106.2\Omega = 511.2\angle -12^\circ\Omega$$

At 200 Hz X_C will ten times larger and X_L will be ten times smaller.

$$X_C = -j2947\Omega$$

$$X_L = j18.85\Omega$$

$$Z = 500 + j18.85 - j2947\Omega$$

$$Z \approx 500 - j2928\Omega = 2970\angle -80.3^\circ\Omega$$

At 20 kHz X_C will ten times smaller and X_L will be ten times larger.

$$X_C = -j29.47\Omega$$

$$X_L = j1885\Omega$$

$$Z = 500 + j1885 - j29.47\Omega$$

$$Z \approx 500 + j1856\Omega = 1922\angle 74.9^\circ\Omega$$

To help visualize this complex impedance, it is useful to construct a phasor plot as shown in Figure 2.3.3. We will do this for the initial case of 2 kHz. The resistive component is the horizontal vector of length 500 (yellow). X_L is straight up (blue) at $188.5\angle 90^\circ$, and X_C is straight down (red) at $294.7\angle -90^\circ$. By copying the X_L vector and then shifting it down and next to X_C, the difference between the two reactive components can be seen (purple component directly above the X_L copy). This Figure 2.3.2 Circuit for Example 2.3.2. reactive sum is then copied and shifted right to join the resistive component to show the final result. This is $511.2\angle -12^\circ\Omega$ (green), as expected.

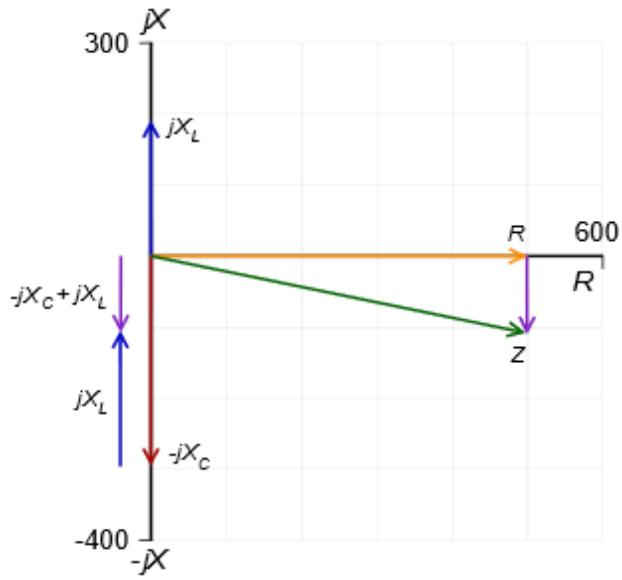

Figure 2.3.3: Construction of the impedance plot for the network of Figure 2.3.2.

Example 2.3.3

Determine the impedance of the network shown in Figure 2.3.4. If the input frequency is 1 kHz, determine the capacitor and inductor values.

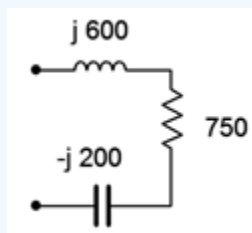

Figure 2.3.4: Circuit for Example 2.3.3.

The reactance values are already given, so we simply add them to determine the impedance in rectangular form. Combine reals with reals and j terms with j terms, and then convert to polar form.

$$Z = R + jX_L - jX_C$$

$$Z = 750 + j600 - j200\Omega$$

$$Z = 750 + j400\Omega = 850\angle 28.1^\circ\Omega$$

To find the capacitance and inductance, we simply rearrange the reactance formulas and solve. First, the inductor:

$$X_L = j2\pi fL$$

$$L = \frac{|X_L|}{2\pi f}$$

$$L = \frac{600\Omega}{2\pi 1kHz}$$

$$L \approx 95.5mH$$

And now for the capacitor:

$$X_C = -j\frac{1}{2\pi fC}$$

$$C = \frac{1}{2\pi f|X_C|}$$

$$C = \frac{1}{2\pi 1kHz200\Omega}$$

$$C = 796nF$$

A plot of the impedance vector summation is shown in Figure $2.3.5$. Note how the three components combine graphically to arrive at Z.

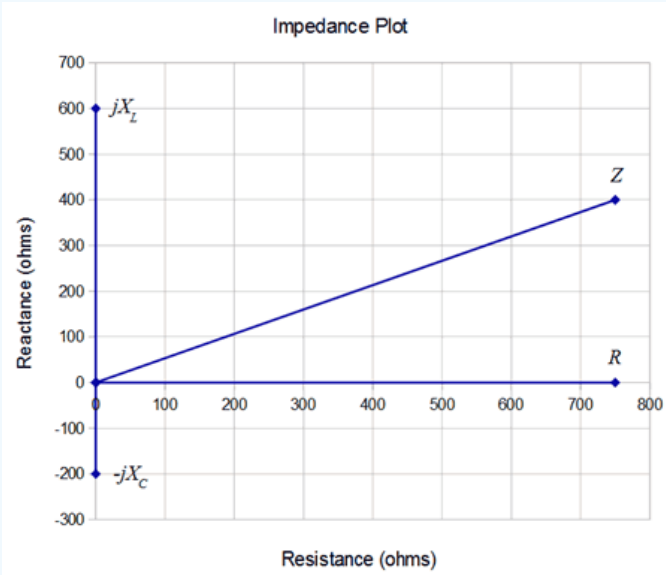

Figure $2.3.5$: Impedance plot for the network of Example $2.3.3$.

This page titled 2.3: Series Impedance is shared under a CC BY-NC-SA 4.0 license and was authored, remixed, and/or curated by James M. Fiore via source content that was edited to the style and standards of the LibreTexts platform.

2.4: Series Circuit Analysis

The techniques employed for series AC circuit analysis are the same as those used for DC. The key item to remember for series circuits, whether AC or DC, as that the current will be the same everywhere in a series connection. The major analysis tools are Ohm's law, Kirchhoff's voltage law (KVL), and optionally, the voltage divider rule.

KVL states that the sum of voltages around a loop must be zero, or that the sum of voltage rises around a loop must equal the sum of voltage drops:

$$\sum v \uparrow = \sum v \downarrow \tag{2.4.1}$$

The voltage divider rule for AC states that the voltage across any component or group of components is proportional to the ratio of the impedance of said component and the total series impedance. For some component A driven by source e,

$$v_A = e\frac{Z_A}{Z_{Total}} \tag{2.4.2}$$

If current is the desired quantity, the equivalent impedance of the network is found and then divided into the equivalent source voltage. If the voltages across specific components are desired, they can be found using the circulating current and Ohm's law. Alternately, they can be computed using the voltage divider rule. If a current source is driving the series circuit then the circulating current is the source current. Individual component voltages may be found using the source current and Ohm's law. The source voltage may be found by summing the component voltages via KVL, or by determining the equivalent series impedance and multiplying it by the source current.

Example 2.4.1

For the circuit of Figure 2.4.1, find the circulating current and the voltages across the capacitor and resistor.

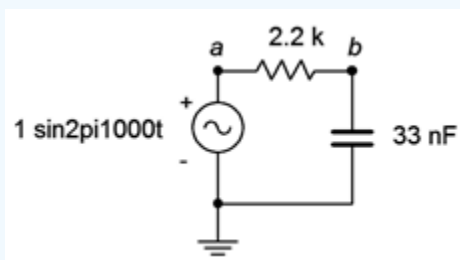

Figure 2.4.1: Circuit for Example 2.4.1.

The first step is to determine X_C and then find Z_{total}. Then use Ohm's law to find the circulating current.

$$X_C = -j\frac{1}{2\pi fC}$$

$$X_C = -j\frac{1}{2\pi 1000Hz33nF}$$

$$X_C = -j4823\Omega$$

$$Z_{Total} = R + (-jX_C)$$

$$Z_{Total} = 2200\Omega - j4823\Omega$$

$$Z_{Total} = 5301\angle -65.5^\circ\Omega$$

$$i = \frac{v}{Z}$$

$$i = \frac{1V}{5301\angle -65.5^\circ \Omega}$$

$$i = 188.6\angle 65.5^\circ \mu A$$

Now use Ohm's law to find the component voltages.

$$v_R = i \times R$$

$$v_R = 188.6\angle 65.5^\circ \mu A \times 2200\angle 0^\circ \Omega$$

$$v_R = 0.4149\angle 65.5^\circ V$$

$$v_C = i \times X_C$$

$$v_C = 188.6\angle 65.5^\circ \mu A \times 4823\angle -90^\circ \Omega$$

$$v_C = 0.9098\angle -24.5^\circ V$$

To complete this Example, we shall generate a series of plots: First off, an impedance plot showing the vector combination of R and X_C leading to Z_{Total}. This is shown in Figure $2.4.2$.

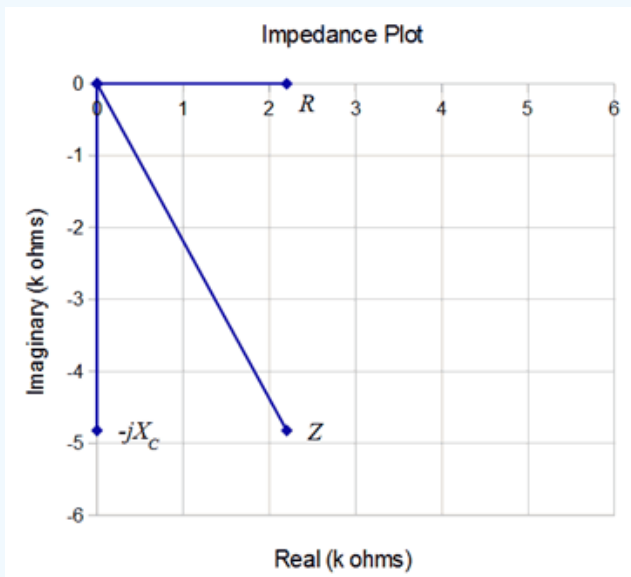

Figure $2.4.2$: Impedance plot for Example $2.4.1$.

Next, Figure $2.4.3$ illustrates the phasor diagram of the three voltages. It may not be immediately apparent but an examination of this plot shows that it is just a counterclockwise rotation of the impedance plot. In fact, it is rotated by 65.5 degrees, the phase angle of the current. This should come as no surprise as the current is multiplied by each resistance, reactance or impedance to develop the voltage, and a vector multiplication simply adds the angles.

Also, note that if we simply summed the magnitudes of the component voltages, the result would be considerably larger than the input voltage, seeming to violate KVL. In contrast, once a proper vector summation is performed, all is right in paradise.

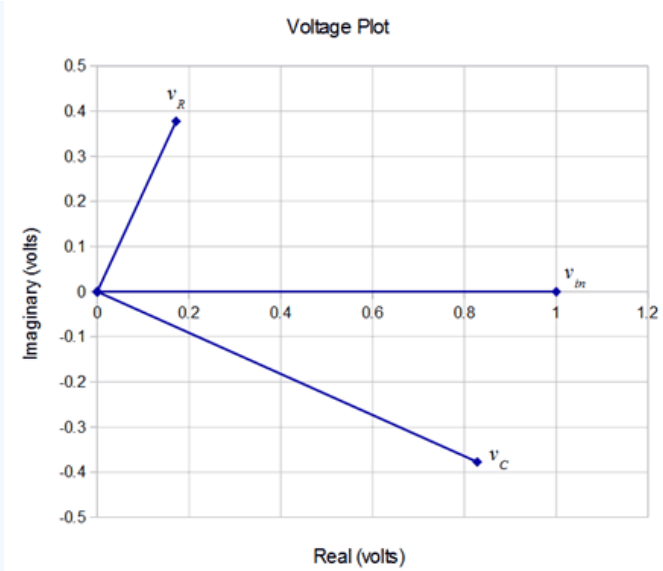

Figure 2.4.3: Voltage phasor diagram for Example 2.4.1.

For further clarity, Figure 2.4.4 plots the voltages in the time domain. Note how the component voltages add graphically resulting in the input voltage.

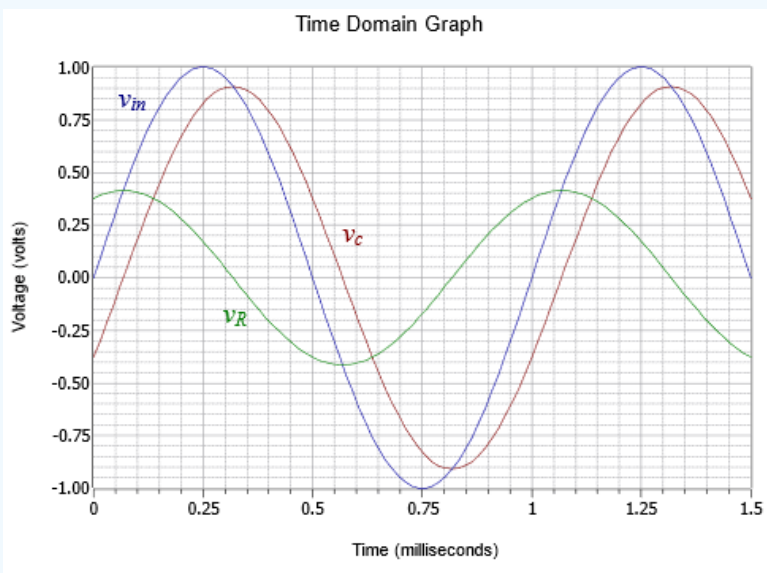

Figure 2.4.4: Time domain response for Example 2.4.1.

The time shifts may be computed for verification as follows:

$$\theta = 360^\circ \frac{\Delta t}{T}$$

$$\Delta t_R = T \frac{\theta_R}{360^\circ}$$

$$\Delta t_R = 1ms \frac{65.5^\circ}{360^\circ}$$

$$\Delta t_R = 181.9\mu s$$

$$\Delta t_C = T \frac{\theta_C}{360^\circ}$$

$$\Delta t_C = 1ms\frac{-24.5^\circ}{360^\circ}$$

$$\Delta t_C = -68\mu s$$

Thus we verify the resistor voltage leading (to the left) by 181.9 μs and the capacitor voltage lagging (to the right) by 68 μs, as seen in Figure $2.4.4$.

Computer Simulation

The circuit of Example $2.4.1$ is captured into a simulator as shown in Figure $2.4.5$. Node voltage 1 corresponds to the input voltage and node 2 corresponds to the capacitor voltage. The resistor voltage is merely the difference between these two, or node 1 minus node 2.

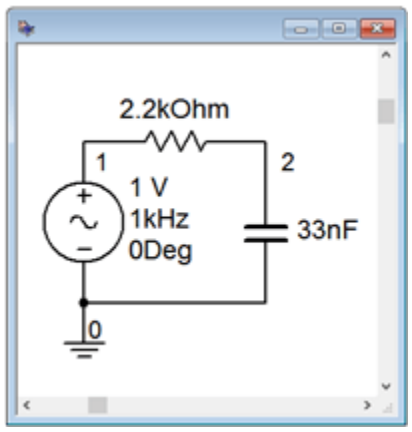

Figure $2.4.5$: The circuit of Example $2.4.1$ in a simulator.

A transient or time domain simulation is performed. The results of the simulation are shown in Figure $2.4.6$. Note the tight agreement with the computed results as plotted in Figure $2.4.4$.

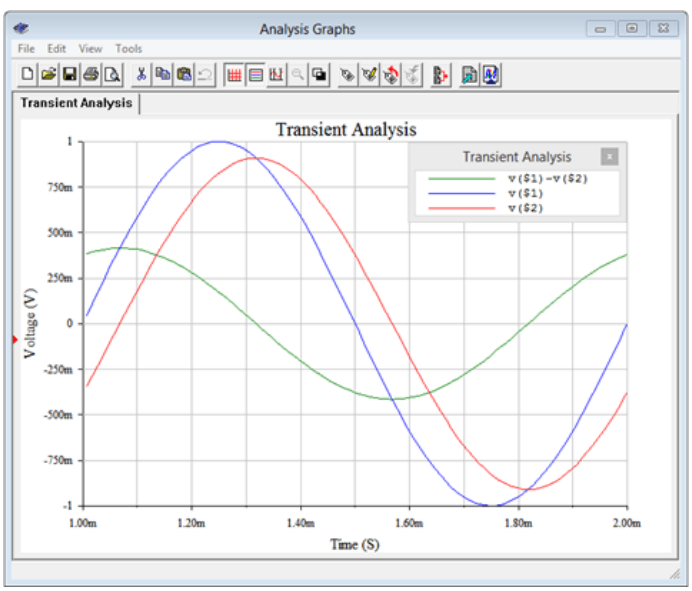

Figure $2.4.6$: Time domain response of Example $2.4.1$ from a simulator.

We will now examine a variety of different series circuits. To ease the computations, we will simply state values for the component reactances rather than specify a frequency along with inductor and/or capacitor values.

Example 2.4.2

Determine the component voltages for the circuit shown in Figure 2.4.7.

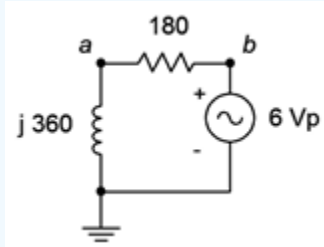

Figure 2.4.7: Circuit for Example 2.4.2.

Given the reference direction of the source (which produces a counterclockwise reference current), the voltage across the resistor will be defined as $v_b - v_a$. The first step is to find the equivalent series impedance. By inspection, this is $180 + j360\Omega$, which is equivalent to $402.5\angle 63.4^\circ\Omega$.

The voltages can be found via the voltage divider rule.

$$v_L = e\frac{X_L}{Z}$$

$$v_L = 6\angle 0^\circ V\frac{360\angle 90^\circ\Omega}{402.5\angle 63.4^\circ\Omega}$$

$$v_L = 5.366\angle 26.6^\circ Vp$$

$$v_R = e\frac{R}{Z}$$

$$v_R = 6\angle 0^\circ V\frac{180\angle 0^\circ\Omega}{402.5\angle 63.4^\circ\Omega}$$

$$v_R = 2.683\angle -63.4^\circ Vp$$

The rectangular versions of v_L and v_R are $4.8 + j2.4$ and $1.2 - j2.4$ respectively, summing up to the source of $6\angle 0^\circ$. This is illustrated in the phasor voltage plot of Figure 2.4.8.

Figure 2.4.8: Voltage phasor diagram for Example 2.4.2.

Compare the plot of Figure $2.4.8$ to that of the RC circuit in Figure $2.4.3$. In this circuit, the impedance is inductive. This causes the current to lag the voltage, the opposite of the case for the RC circuit. Thus, the resistor voltage winds up below the real axis instead of above it (remember, the current and voltage for a resistor are in phase, and therefore the voltage across the resistor will have the same phase angle as the current through it). Once again, simply summing the magnitudes of the voltages yields a greater value than the source, however, a proper vector addition shows that KVL is satisfied.

A time domain plot of the source and component voltages is shown in Figure $2.4.9$. Note the similarity with the plot of Figure $2.4.4$. Further, note how the time positions of the component voltages have swapped.

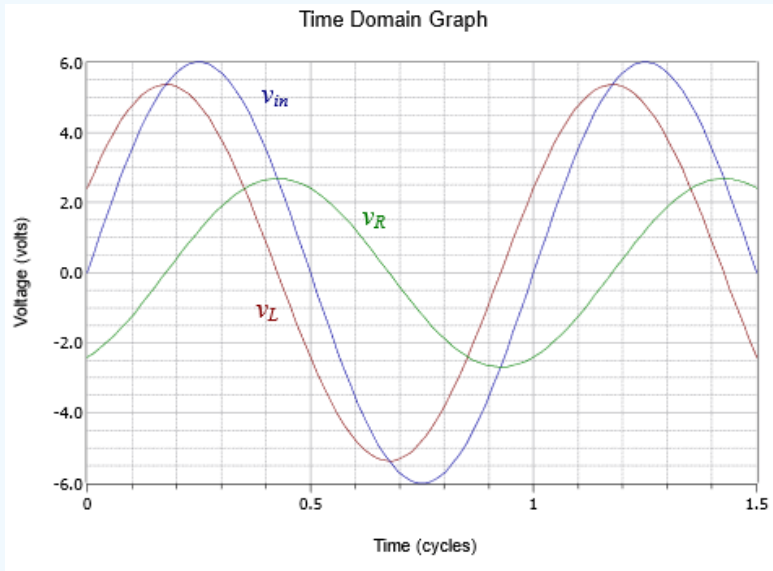

Figure $2.4.9$: Time domain response for Example $2.4.2$.

Finally, as a source frequency was not specified for this circuit, the time scale of Figure $2.4.9$ is calibrated in terms of cycles rather than seconds.

Example $2.4.3$

Find the voltages v_a and v_b in the circuit of Figure $2.4.10$. Assume the current source is the reference of 0°.

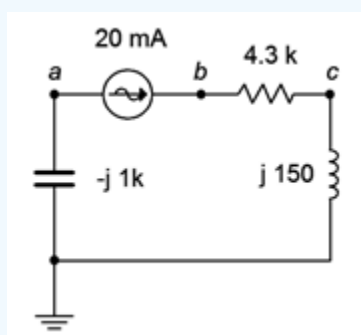

Figure $2.4.10$: Circuit for Example $2.4.3$.

Ohm's law may be used directly as the current is set by the source. Given the reference direction of the 20 mA source, the reference polarity for the capacitor voltage will be + to – from bottom to top. Thus, v_a is negative.

$$v_a = v_C = -i \times X_C$$

$$v_a = -20E-3\angle 0^\circ A \times 1000\angle -90^\circ \Omega$$

$$v_a = -20\angle -90^\circ V$$

Recalling that a negative magnitude is the same as a 180° phase shift, we may remove the magnitude's negative sign by adding 180° to the phase angle. Therefore, v_a may also be written as $20\angle 90^\circ$.

The node b voltage is found by multiplying the current by the impedance seen from node b to ground.

$$v_b = i \times (R + jX_L)$$

$$v_b = 20\angle 0^\circ mA \times (4300 + j150\Omega)$$

$$v_b = 86.05\angle 2^\circ V$$

Notice the small size of the phase angle. This is expected given that the inductive reactance is so much smaller than the resistive component. Finally, these voltage are RMS as the current is assumed to be RMS (not having been labeled as peak or peak-to-peak).

Example $2.4.4$

Find the voltage v_{bd} in the circuit of Figure $2.4.11$. $E_1 = 2\angle 0^\circ$ volts peak and $E_2 = 5\angle 60^\circ$ volts peak.

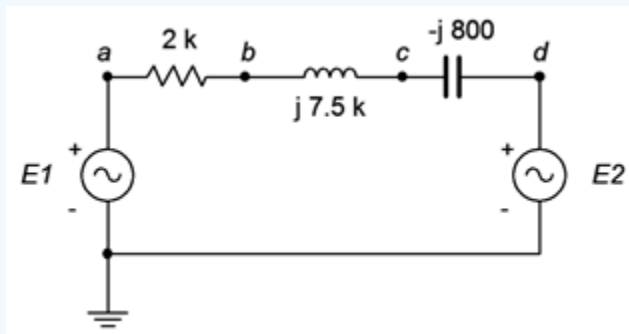

Figure $2.4.11$: Circuit for Example $2.4.3$.

The first step is to find the equivalent source voltage. Voltage sources in series add, however, note the reference polarity for E_2. If we take E_1 as the system reference, then the combined source is $E_1 - E_2$. Using E_1 as the reference source creates a clockwise reference current and thus a positive reference polarity for v_{bd}. If E_2 was taken as the reference then v_{bd} would be assumed to be negative due to the assumed counterclockwise reference direction of the resulting current. Either way will work.

$$E_{Total} = E_1 - E_2$$

$$E_{Total} = 2\angle 0^\circ Vp - 5\angle 60^\circ Vp$$

$$E_{Total} = 4.359\angle -96.6^\circ Vp$$

We can now use a voltage divider between the impedance seen from node b to node d versus the total series impedance. The impedance of the circuit is $2k + j7.5k - j800\Omega$, or $2k + j6.7k\Omega$. This is equivalent to $6992\angle 73.4^\circ\Omega$. The impedance of between nodes b and d is $j7.5k - j800\Omega$, or $j6.7k\Omega$. In polar form this is $6700\angle 90^\circ\Omega$.

The voltage divider yields:

$$v_{bd} = e\frac{Z_{bd}}{Z_{Total}}$$

$$v_{bd} = 4.359\angle -96.6^\circ V\frac{6700\angle 90^\circ\Omega}{6992\angle 73.4^\circ\Omega}$$

$$v_{bd} = 4.177\angle -80^\circ Vp$$

Although we have answered the question, at this point attempting to visualize the waveforms in your head to verify the results may be a little challenging. No problem! If we also find the voltage across the resistor, we can check to see if KVL is verified using a phasor diagram. First, the resistor voltage may be found using the voltage divider rule.

$$v_R = e\frac{R}{Z_{Total}}$$

$$v_R = 4.359\angle -96.6^\circ V\frac{2000\angle 0^\circ \Omega}{6992\angle 73.4^\circ \Omega}$$

$$v_R = 1.247\angle -170^\circ Vp$$

We now plot all four voltages as seen in Figure $2.4.12$ (note the unequal horizontal versus vertical scaling for ease of visual analysis).

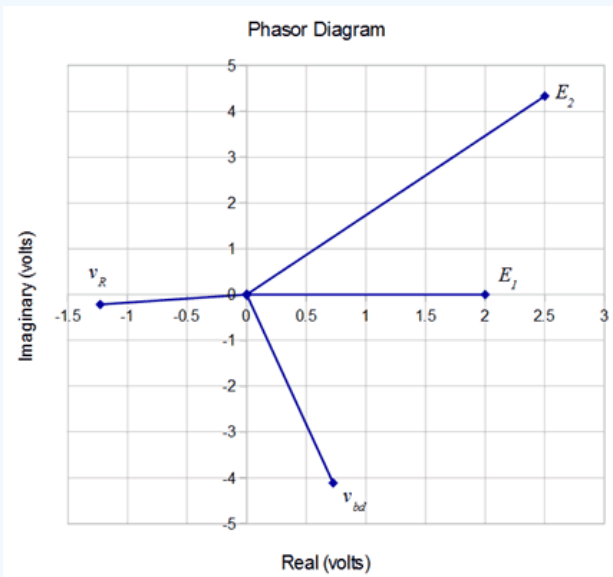

Figure $2.4.12$: Voltage phasor diagram for Example $2.4.3$.

KVL tells us that the sum of the voltage rises must equal the sum of the voltage drops. We had used E_1 as the reference and treated it as a rise. This made the reference direction clockwise for the circulating current. As a consequence, v_R and v_{bd} are voltage drops. E_2 is also seen as a drop given its reference polarity markings. In other words, E_1 should equal the sum of v_R , v_{bd} and E_2. Let's see if this is borne out graphically in the phasor diagram.

Looking at imaginary parts first, E_1 is strictly real so the other three vectors should sum to zero for their imaginary parts. The imaginary part of E_2 is about +4.3 while the other two come in around −4.1 and −0.2, so they do balance. For the real parts, E_2 is +2.5, v_{bd} is about +0.7 and v_R is about −1.2. These add up to +2, the real component of E_1. Everything balances. For more exacting results, you could convert each of the polar form results into rectangular form and add the reals to the reals, and the imaginaries to the imaginaries, and get the same result. In fact, using the prior recorded values, the three drops sum to $1.997\angle 0.0013^\circ$ volts versus precisely $2\angle 0^\circ$ volts. This small deviation is due to the accumulated rounding and truncation errors of the intermediate results.

Sometimes a problem concerns determining resistance or reactance values. The solution paths will require use of the analysis rules in reverse. For example, if a resistor value is needed to set a specific current, the total required impedance can be determined from this current and the given voltage supply. The values of the other series components can then be subtracted from the total (using rectangular form), yielding the required resistor or reactance value.

Another possibility is determining a specific capacitance or inductance to meet certain requirements. An example of this would be a simple crossover network for a loudspeaker system. Generally, a single transducer is incapable of reproducing music signals of all frequencies at sufficiently loud levels while maintaining low distortion. Consequently, the frequency range is split into two or more bands with each being covered by a transducer optimized to reproduce those frequencies. These transducers, along with a few electrical components, are then packaged into an appropriate enclosure commonly referred to as a loudspeaker[1]. In

a basic system, the audible spectrum is split into two parts, as seen in Figure $2.4.13$. The low frequencies are handled by a large transducer called a woofer, while the high frequencies are handled by a small, light transducer called a tweeter that can follow the rapidly changing high frequency content with accuracy. Woofers are not capable of reproducing high frequencies, and excessive low frequency content can physically damage a tweeter. Thus, some means of “steering” the high frequency content to the tweeter and the low frequency content to the woofer must be employed. One way to do this is to place an inductor or capacitor in series with the transducer.

Figure $2.4.13$: A two-way bookshelf loudspeaker system with tweeter (top) and woofer (bottom).

Figure $2.4.14$ shows a simple way to block low frequencies from a tweeter. In this diagram, the loudspeaker is modeled as a resistor. Although this is not perfectly accurate, it is sufficient to illustrate the idea.

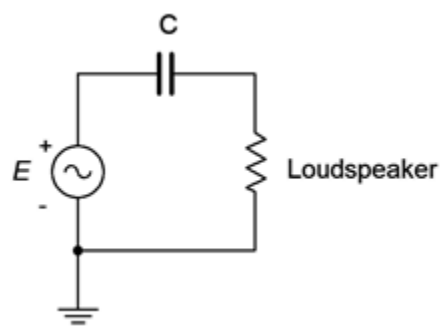

Figure $2.4.14$: A basic loudspeaker crossover network.

To understand this concept, simply think of the circuit as a voltage divider between the loudspeaker and the reactance of the capacitor. Capacitive reactance is inversely proportional to frequency. The circuit is designed such that X_C is much larger than than the impedance of the loudspeaker at very low frequencies. This means that very little of a low frequency signal will reach the loudspeaker as most of that voltage will drop across the capacitor. In contrast, at high frequencies X_C is much smaller than the tweeter's impedance and thus virtually all of the source signal reaches the loudspeaker. The transition point between these two regions is called the crossover frequency and is usually defined as the point where X_C equals the magnitude of the loudspeaker impedance. For a woofer, the capacitor would be replaced by an inductor. At low frequencies the inductive reactance would be minimal, thereby allowing all of the low frequency content to reach the woofer. The opposite happens at high frequencies. The inductive reactance would rise with frequency and eventually prevent or “choke off” the signal to the woofer (hence, the slang term “choke” for an inductor).

Example $2.4.5$

Referring to the circuit of Figure $2.4.14$, assume the loudspeaker impedance is $8\angle 0^\circ \Omega$. Determine a capacitor value for a crossover frequency of 2.5 kHz. At this frequency the magnitude of X_C should be the same as that of the loudspeaker. For a 10 volt RMS input signal, determine the loudspeaker voltage at frequencies of 100 Hz, 2.5 kHz and 15 kHz.

The first step is to determine the value of the capacitor such that at 2.5 kHz X_C equals 8Ω. To do this, simply rearrange the capacitive reactance formula:

$$X_C = -j\frac{1}{2\pi fC}$$

$$C = 12\pi f|X_C|$$

$$C = \frac{1}{2\pi 2500Hz8\Omega}$$

$$C = 7.96\mu F$$

To find the loudspeaker voltage at the three specified frequencies, first find the reactance at that frequency and then use the voltage divider rule. We already know that at 2.5 kHz the reactance is $-j8\Omega$.

$$v_{loudspeaker} = e\frac{Z_{Load}}{Z_{Total}}$$

$$v_{loudspeaker} = 10\angle 0^\circ Vrms\frac{8\Omega}{8 - j8\Omega}$$

$$v_{loudspeaker} = 7.07\angle 45^\circ Vrms$$

At 100 Hz, the frequency has decreased by a factor of 25 so the reactance goes up by the same factor yielding $-j200\Omega$.

$$v_{loudspeaker} = e\frac{Z_{Load}}{Z_{Total}}$$

$$v_{loudspeaker} = 10\angle 0^\circ Vrms\frac{8\Omega}{8 - j200\Omega}$$

$$v_{loudspeaker} = 0.4\angle 87.7^\circ Vrms$$

At 15 kHz, the frequency has increased by a factor of 6 so the reactance goes down by the same factor yielding $-j1.333\Omega$.

$$v_{loudspeaker} = e\frac{Z_{Load}}{Z_{Total}}$$

$$v_{loudspeaker} = 10\angle 0^\circ Vrms\frac{8\Omega}{8 - j1.333\Omega}$$

$$v_{loudspeaker} = 9.86\angle 9.5^\circ Vrms$$

From this tally, it should be obvious that the lowest bass frequencies will experience attenuation while the highest frequencies will see little reduction in amplitude. This is just what we want.

The concept of a variation in output voltage with respect to frequency, or frequency response, will be examined in much greater detail in upcoming chapters.

References

[1]To add some confusion, the term “loudspeaker” can refer to either the individual transducers (engineer-speak) or the entire finished system (audiophile-speak).

This page titled 2.4: Series Circuit Analysis is shared under a CC BY-NC-SA 4.0 license and was authored, remixed, and/or curated by James M. Fiore via source content that was edited to the style and standards of the LibreTexts platform.

2.5: Concerning Practical Inductors

Up to this point, inductors have been treated as ideal components, that is, pure inductance. In reality, all inductors have some resistance associated with them due to the resistance of the wire used to make the coil. This is called ESR, or Equivalent Series Resistance. It is also denoted as R_{coil}. Ideally, this resistance will be small enough to ignore, but ultimately it will place a limit on the performance of any circuit that utilizes an inductor.

While it is possible to measure the resistance of an inductor using a DMM, this will not yield an accurate value at all frequencies. In fact, as frequency increases, ESR will also increase. This is due to skin effect. At higher frequencies, current is not distributed equally throughout the cross-section of a conductor. In fact, it tends to "hug" the outer surface or "skin" of the conductor. This reduces the effective crosssectional area and thereby increases the resistance[1]. In general, as frequency rises, so does R_{coil}. Unfortunately, the situation is further complicated by distributed capacitance that will become an issue at still higher frequencies. As a consequence, manufacturers will give a "Q plot", such as the one shown in Figure $2.5.1$.

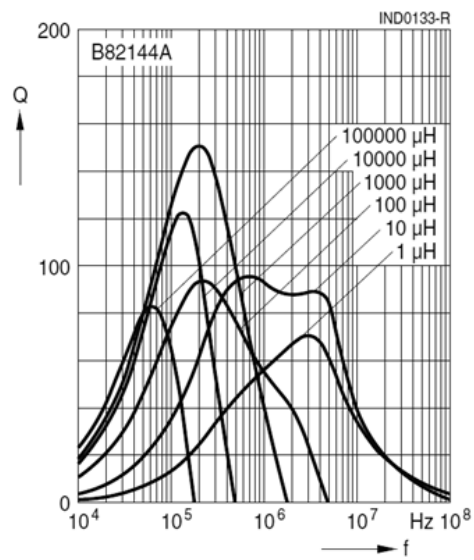

Figure $2.5.1$: Inductor Q graph. Courtesy of TDK

The Q, or quality factor, of an inductor can be defined in terms of the peak energy stored in the device versus the energy dissipated per cycle. Keeping time constant, we can relate this to the power via the relation i^2R. The current necessarily is the same for both the reactive and resistive components, therefore the Q of the coil is equal to the ratio of its reactance to its resistance at the frequency of interest.

$$Q_{coil} = \frac{X_L}{R_{coil}} \tag{2.5.1}$$

Where

Q_{coil} is the quality factor of the inductor,

X_L is the magnitude of the inductive reactance at the frequency of interest,

R_{coil} is the resistance of the inductor at the frequency of interest.

In general, the higher the Q_{coil}, the better. As can be seen in Figure $2.5.1$, Q_{coil} is not a constant. Indeed, it increases with frequency until a peak is reached, at which point it begins to fall.

When dealing with practical inductors, the effective Q_{coil} can be determined from a graph if the operating frequency is known. Once the Q_{coil} is found, the effective value of Q_{coil} can be found from Equation $2.5.1$. This value can then be placed in series with the ideal inductor to create a more accurate result. For analysis, this pair is sometimes drawn with a box around it to denote that

Q_{coil} is not a separate physical resistor, but is the effective resistance of the inductor.

Example $2.5.1$

Find the voltage across the inductor in the circuit of Figure $2.5.2$. Assume the source voltage is $20\angle 0^\circ$ peak-to-peak at a frequency of 20 kHz. L is equal to 10 mH, Q_{coil} is 50, and R_1 is 600Ω.

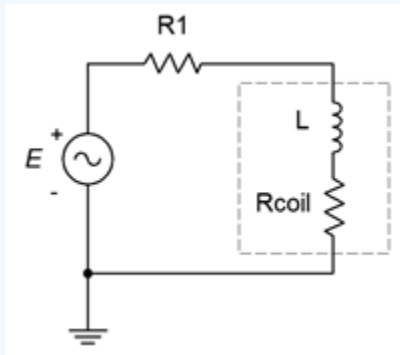

Figure $2.5.2$: Circuit for Example $2.5.1$.

Remember, the inductor consists of both elements within the dashed box. First, find the magnitude of the inductive reactance.

$$|X_L| = 2\pi f L$$

$$|X_L| = 2\pi 20kHz10mH$$

$$|X_L| = 1257\Omega$$

We can now find R_{coil} via Equation $2.5.1$:

$$Q_{coil} = \frac{X_L}{R_{coil}}$$

Therefore,

$$R_{coil} = \frac{X_L}{Q_{coil}}$$

$$R_{coil} = \frac{1257}{50}$$

$$R_{coil} = 25.1\Omega$$

The impedance of the inductor is $25.1 + j1257\Omega$, or $1257\angle 88.9^\circ\Omega$. The total impedance is $600 + 25.1 + j1257\Omega$, or $1404\angle 63.6^\circ\Omega$. We can use a voltage divider to find the inductor's voltage.

$$v_{ind} = e\frac{Z_{ind}}{Z_{Total}}$$

$$v_{ind} = 20\angle 0^\circ Vpp\frac{1257\angle 88.9^\circ\Omega}{1404\angle 63.6^\circ\Omega}$$

$$v_{ind} = 17.9\angle 25.3^\circ Vpp$$

It is worth noting that, due to the coil resistance, the inductor's current and voltage are not precisely 90° out of phase, but rather 88.9°. That's a small but measurable deviation.

References

[1]Recall that $R = \rho l/A$. A decrease in area A results in increased resistance, R.

This page titled 2.5: Concerning Practical Inductors is shared under a CC BY-NC-SA 4.0 license and was authored, remixed, and/or curated by James M. Fiore via source content that was edited to the style and standards of the LibreTexts platform.

2.6: Summary

A series connection is any connection in which the current through one component must be identical to the current flowing through any other component in that connection. This remains true for AC circuits employing resistors, capacitors and inductors. The equivalent impedance of a set of resistors, inductors and capacitors placed in series is the vector sum of their resistance and reactance values. Inductive and capacitive reactance have opposing signs and will partially cancel each other. While resistance remains constant across frequency, reactance does not. Capacitive reactance decreases with frequency while inductive reactance increases. Therefore, the precise impedance value will vary with frequency. If the impedance angle is positive, the circuit is said to be inductive. If the impedance angle is negative, the circuit is said to be capacitive.

Once inductance and capacitance values have been turned into their corresponding reactances at the frequency of interest, Ohm's law can be used to find the voltage across any component. The voltage will equal the product of the resistance or reactance and the current flowing through it. This is a vector computation. The current through a resistor will be in phase with the voltage across it. In contrast, the inductor voltage will lead the current and the resistor voltage by 90 degrees. Also, the capacitor voltage will lag the current and the resistor voltage by 90 degrees. From these observations it is apparent that the inductor and capacitor voltages in a series connection must be 180 degrees out of phase.

Kirchhoff's voltage law (KVL) states that the sum of voltage rises around any series loop must equal the sum of voltage drops around that loop. This remains true for AC analysis, however, it is imperative that a vector summation is performed and not just a simple summation of the magnitudes. If the phase angles are ignored, it is possible for the voltage magnitudes to sum to considerably more than the source voltage. The voltage divider rule (VDR) remains true for AC analysis, but again, it is a vector computation. Thus, a rendering using just magnitudes will not produce a correct result. For example, a divider between a resistor and inductive reactance of equal value will not yield the source voltage splitting in half across each component.

For highest accuracy, the coil resistance, or R_{coil}, of inductors should not be ignored. It is treated as a small resistance in series with and integral to the inductor. Coil resistance is computed from the inductor's Q, or quality factor. Q is defined as the ratio of X_L to R_{coil}.

Review Questions

1. How is the equivalent impedance for a string of series connected resistors, capacitors and inductors computed?

2. Will the impedance of an RLC circuit be the same at all frequencies? Why/why not?

3. How are series connected AC voltage sources combined?

4. Does Kirchhoff's voltage law change for AC circuit analysis?

5. Is it possible for the voltage magnitudes of an AC RLC circuit to sum to more than the source voltage? Why/why not?

6. How is a phasor impedance plot for a series network related to its phasor voltage plot?

This page titled 2.6: Summary is shared under a CC BY-NC-SA 4.0 license and was authored, remixed, and/or curated by James M. Fiore via source content that was edited to the style and standards of the LibreTexts platform.

2.7: Exercises

Analysis

1. Determine the impedance of the circuit of Figure 2.7.1 for a 1 kHz sine.

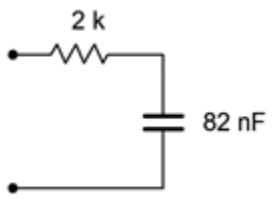

Figure 2.7.1

2. Determine the impedance of the circuit of Figure 2.7.1 for a 5 kHz sine.

3. Determine the impedance of the circuit of Figure 2.7.2 for a 10 kHz sine.

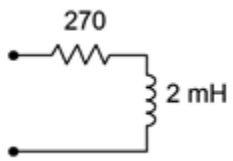

Figure 2.7.2

4. Determine the impedance of the circuit of Figure 2.7.2 for a 50 kHz sine.

5. Determine the impedance of the circuit of Figure 2.7.3 for a 1 kHz sine.

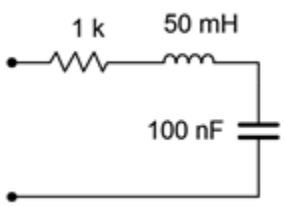

Figure 2.7.3

6. Determine the impedance of the circuit of Figure 2.7.3 for a 500 Hz sine.

7. Determine the impedance of the circuit of Figure 2.7.4.

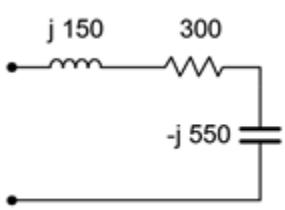

Figure $2.7.4$

8. In the circuit of Figure $2.7.4$, if the input frequency is 100 Hz, what is the value of the inductor, in mH?

9. In the circuit of Figure $2.7.4$, if the input frequency is 200 Hz, what is the value of the capacitor, in μF?

10. Draw the voltage and current waveforms for the circuit of Figure $2.7.5$.

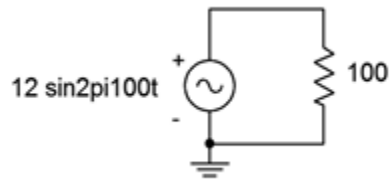

Figure $2.7.5$

11. Draw the voltage and current waveforms for the circuit of Figure $2.7.6$.

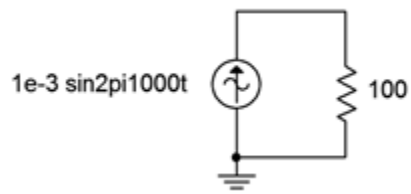

Figure $2.7.6$

12. Draw the voltage and current waveforms for the circuit of Figure $2.7.7$ if E is a one volt peak sine at a frequency of 10 kHz and C = 3.3 nF.

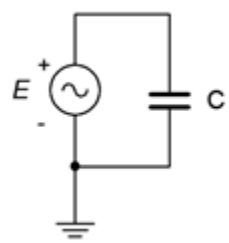

Figure $2.7.7$

13. Draw the voltage and current waveforms for the circuit of Figure $2.7.8$ if E is a two volt peak-peak sine at a frequency of 40 Hz and L = 33 mH.

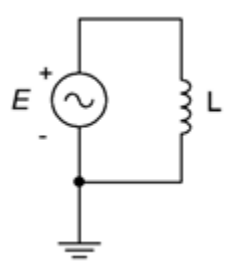

Figure $2.7.8$

14. Draw the voltage and current waveforms for the circuit of Figure $2.7.9$ if I is a 10 μA peak sine at a frequency of 2 kHz and C = 6.8 nF.

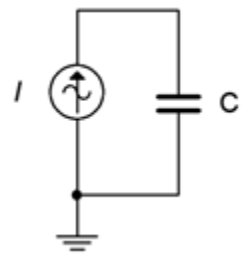

Figure $2.7.9$

15. Draw the voltage and current waveforms for the circuit of Figure $2.7.10$ if I is a two amp peak-peak sine at a frequency of 40 Hz and L = 33 mH.

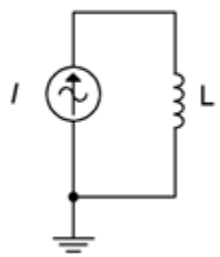

Figure $2.7.10$

16. Determine the impedance of the circuit of Figure $2.7.11$.

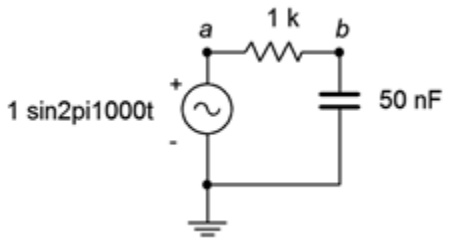

Figure $2.7.11$

17. Determine the impedance of the circuit of Figure $2.7.11$ using a frequency of 10 kHz.

18. For the circuit of Figure $2.7.11$, determine the circulating current and the voltages across each component. Draw a phasor diagram of the three component voltages. Also find the time delay between the voltages of the components.

19. For the circuit of Figure $2.7.11$ using a frequency of 10 kHz, determine the circulating current and the voltages across each component. Draw a phasor diagram of the three component voltages and determine the time delay between the capacitor and resistor voltages.

20. Determine the impedance of the circuit of Figure $2.7.12$.

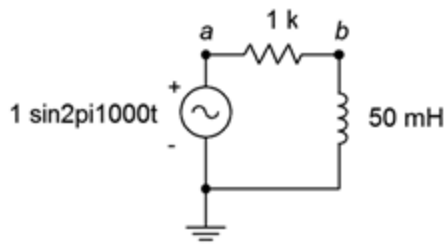

Figure 2.7.12

21. Determine the impedance of the circuit of Figure 2.7.12 using a frequency of 10 kHz.

22. For the circuit of Figure 2.7.12, determine the circulating current and the voltages across each component. Also find the time delay between the voltages of the components.

23. For the circuit of Figure 2.7.12 with a frequency of 3 kHz, determine the circulating current and the voltages across each component. Also find the time delay between the voltages of the components.

24. For the circuit of Figure 2.7.13, determine the circulating current.

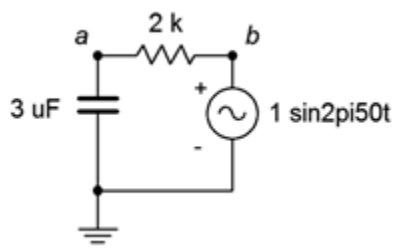

Figure 2.7.13

25. Determine the impedance of the circuit of Figure 2.7.13 using a frequency of 1.5 kHz.

26. For the circuit of Figure 2.7.13, determine the circulating current and the voltages across each component. Also find the time delay between the voltages of the components.

27. For the circuit of Figure 2.7.13 with a frequency of 1.5 kHz, determine the circulating current and the voltages across each component. Also find the time delay between the voltages of the components.

28. For the circuit of Figure 2.7.14, determine the circulating current and the voltages across each component. Draw a phasor diagram of the three component voltages and determine the time delay between the inductor and resistor voltages.

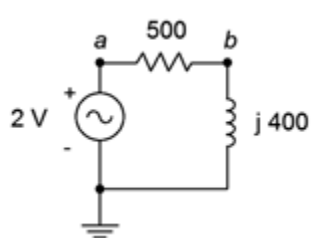

Figure 2.7.14

29. For the circuit of Figure 2.7.15, determine the circulating current and the voltages across each component.

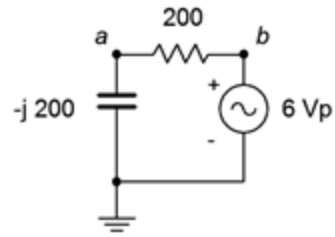

Figure 2.7.15

30. For the circuit of Figure 2.7.16, determine the circulating current and the voltages across each component.

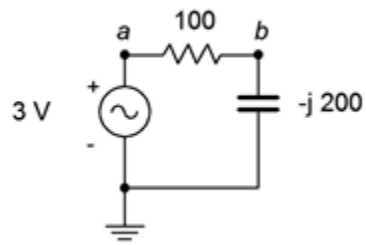

Figure 2.7.16

31. For the circuit of Figure 2.7.17, determine the applied voltage and the voltages across each component.

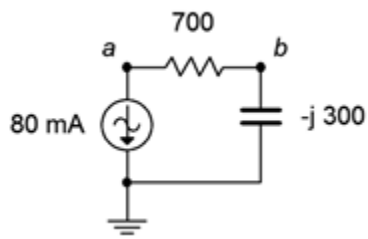

Figure 2.7.17

32. For the circuit of Figure 2.7.18, determine the applied voltage and the voltages across each component.

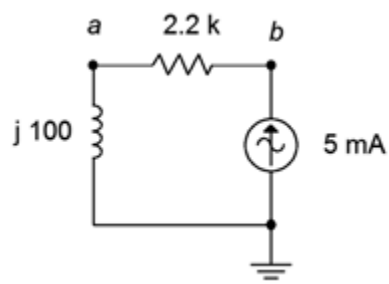

Figure 2.7.18

33. For the circuit of Figure 2.7.19, determine the circulating current and the voltages across each component.

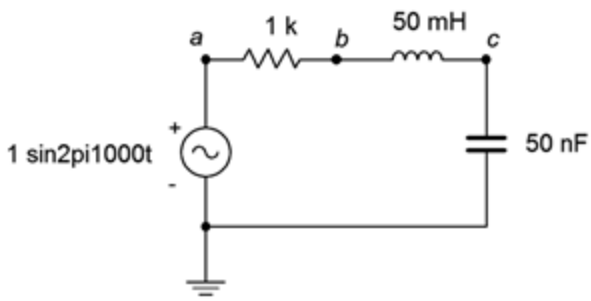

Figure $2.7.19$

34. Repeat the previous problem using an input frequency of 10 kHz.

35. For the circuit of Figure $2.7.20$, determine the circulating current and the voltages across each component. The source is a 10 volt peak sine at 20 kHz, $R = 200\Omega$, C = 100 nF and L = 1 mH.

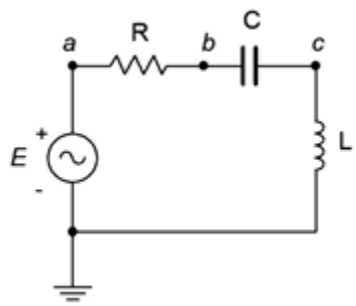

Figure $2.7.20$

36. For the circuit of Figure $2.7.20$, find v_b and v_{ac}.

37. For the circuit of Figure $2.7.21$, find v_b and v_{ac}. The source is a 50 volt peakpeak sine at 10 kHz, $R = 100\Omega$, C = 200 nF and L = 1 mH.

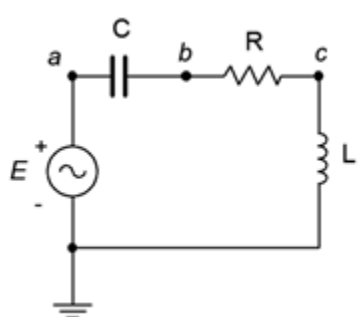

Figure $2.7.21$

38. For the circuit of preceding problem, determine the circulating current and the voltages across each component.

39. For the circuit of Figure $2.7.22$, determine the circulating current and the voltages across each component. E is a 1 volt peak 2 kHz sine. Also, draw a phasor diagram of the four component voltages.

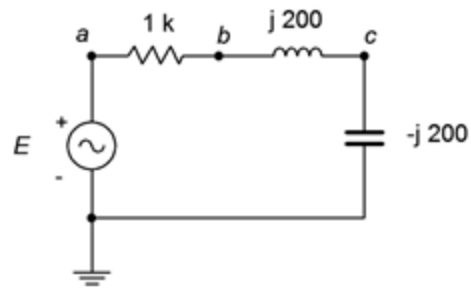

Figure $2.7.22$

40. For the circuit of Figure $2.7.22$, find v_b and v_{ca}. E is a 1 volt peak 2 kHz sine.

41. For the circuit of Figure $2.7.23$, determine v_b, v_c and v_{ac}. E is a 10 volt peak 15 kHz sine.

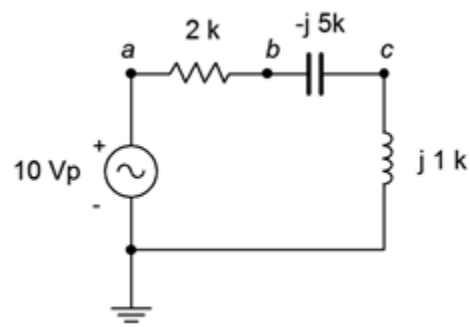

Figure $2.7.23$

42. For the circuit of Figure $2.7.24$, determine the circulating current and the voltages across each component. E is a 100 millivolt peak 250 Hz sine. Further, draw a phasor diagram of the four component voltages.

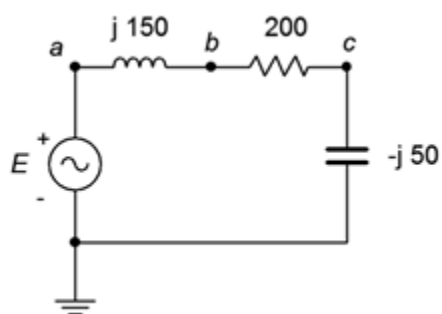

Figure $2.7.24$

43. For the circuit of Figure $2.7.25$, determine the circulating current and the voltages across each component. E is a 2 volt RMS 1 kHz sine. Also, draw a phasor diagram of the four component voltages.

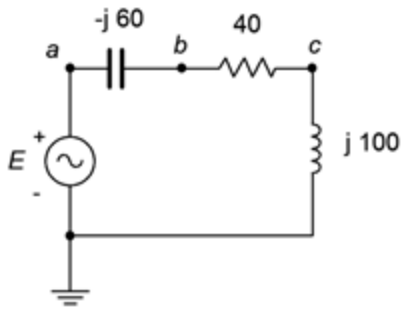

Figure $2.7.25$

44. For the circuit of Figure $2.7.26$, determine v_b, v_c and v_{ac}. E is a 1 volt peak 25 kHz sine.

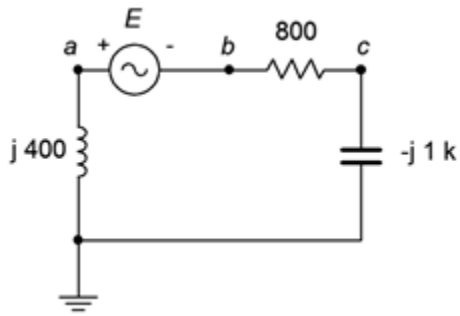

Figure $2.7.26$

45. For the circuit of Figure $2.7.27$, determine the voltages across each component. The source is a 50 mA peak sine at 15 kHz, $R = 200\Omega$, C = 100 nF and L = 1.5 mH.

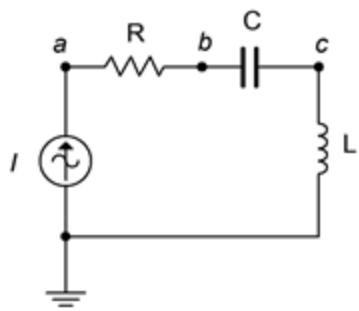

Figure $2.7.27$

46. For the circuit of Figure $2.7.28$, determine v_{ac}, v_b and v_c. The source is a 10 mA peak-peak sine at 50 kHz, $R = 2k\Omega$, C = 10 nF and L = 800 μH.

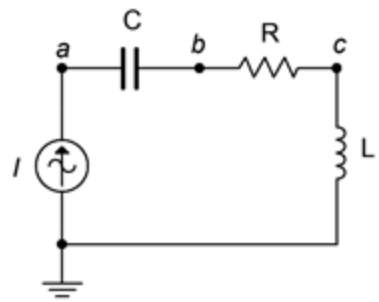

Figure $2.7.28$

47. For the circuit of Figure $2.7.29$, determine the voltages across each component. The source is a 2 mA RMS sine at 1 kHz, $R = 1.2k\Omega$, C = 750 nF and L = 6.8 mH.

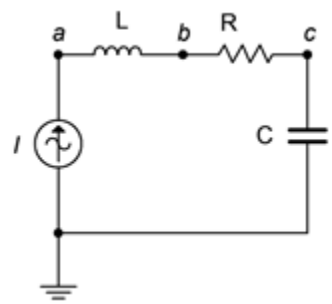

Figure $2.7.29$

48. For the circuit of Figure $2.7.30$, determine v_{ac}, v_b and v_a. The source is a 2 mA peak-peak sine at 300 kHz, $R = 560\Omega$, C = 6.8 nF and L = 400 μH.

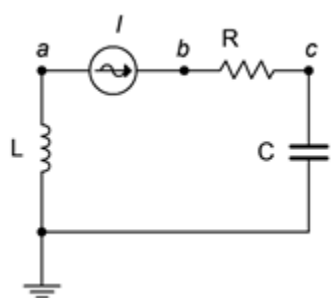

Figure $2.7.30$

49. For the circuit of Figure $2.7.31$, determine the voltages across each component.

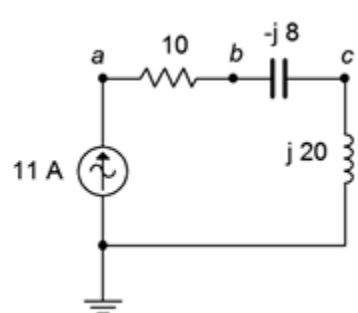

Figure $2.7.31$

50. For the circuit of Figure $2.7.32$, determine the voltages across each component. Further, draw a phasor diagram of the four component voltages.

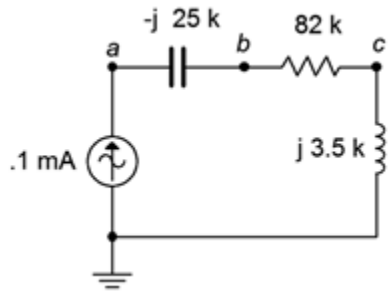

Figure $2.7.32$

51. For the circuit of Figure $2.7.33$, v_{ac}, v_b and v_c. The source is 5 mA peak at 8 kHz.

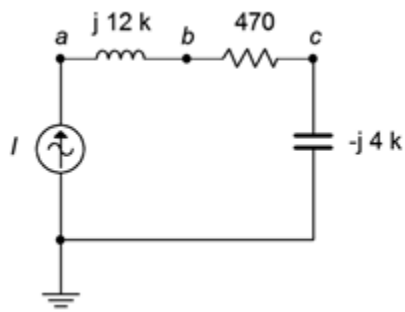

Figure $2.7.33$

52. For the circuit of Figure $2.7.34$, determine the voltages across each component. The source is 20 mA peak at 100 kHz.

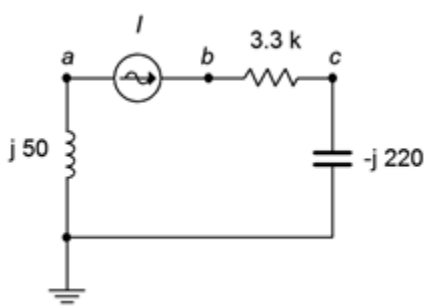

Figure $2.7.34$

53. For the circuit of Figure $2.7.35$, determine the voltages across each component.

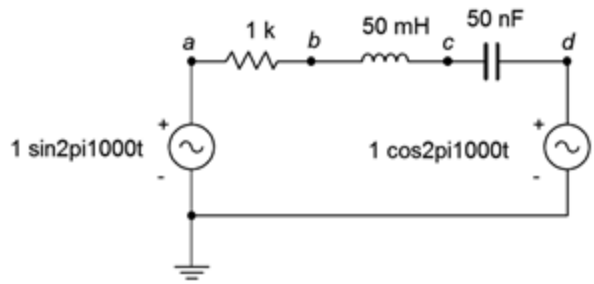

Figure $2.7.35$

54. For the circuit of Figure $2.7.36$, determine the voltages v_b and v_{db}. $E1 = 2\angle 0^\circ$ and $E2 = 5\angle 90^\circ$.

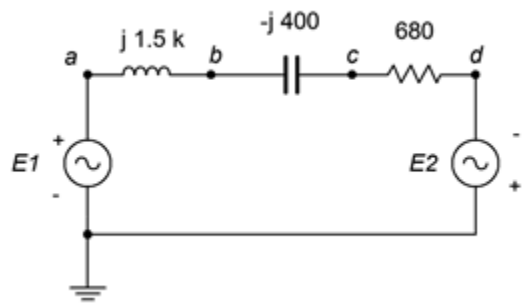

Figure $2.7.36$

55. Determine the inductance and capacitance values for the circuit of problem 52.

56. For the circuit of Figure $2.7.36$, determine the inductor and capacitor values if the source frequency is 12 kHz.

57. For the circuit of Figure $2.7.37$, determine the voltages across each component. $E1 = 1\angle 0^\circ$ and $E2 = 8\angle 60^\circ$.

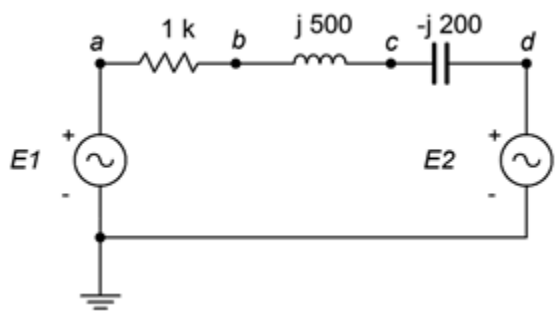

Figure $2.7.37$

Design

58. Redesign the circuit of Figure $2.7.11$ using a new capacitor such that the current magnitude from the source is 100 μA.

59. Redesign the circuit of Figure $2.7.12$ using a new frequency such that the current magnitude from the source is 200 μA.

60. For the circuit of Figure $2.7.11$, determine a new capacitor such that $|X_C| = R$.

61. For the circuit of Figure $2.7.12$, determine a new frequency such that $|X_L| = R$.

Challenge

62. For the circuit of Figure $2.7.19$, determine a new frequency such that $|X_C| = |X_L|$.

63. Determine the output voltage across the capacitor of Figure $2.7.11$ at frequencies of 100 Hz, 5 kHz and 20 kHz. In light of this, if the input signal was a 1 kHz square wave instead of a sine wave as pictured, how would this circuit affect the shape of the output waveform (hint: consider superposition)?

64. Assume that you are troubleshooting a circuit like the one shown in Figure $2.7.20$. E is a 2 volt peak sine at 2 kHz, $R = 390\Omega$, C = 100 nF and L = 25 mH. The circulating current measures approximately 4 mA with a lagging phase angle of just under −40 degrees. What is the likely problem?

65. Given the circuit shown in Figure $2.7.20$, find the values for C and L if the source is a 6 volt sine wave at 1 kHz, $R = 2k\Omega$, v_R = 4 V and v_L = 5 V.

66. The circuit of Figure $2.7.38$ can be used as part of a loudspeaker crossover network. The goal of this circuit is to steer the low frequency tones to the low frequency transducer (labeled here as “Loudspeaker” and often referred to as a woofer). A similar network substitutes a capacitor for the inductor to steer the high frequency tones to the high frequency transducer (AKA tweeter). These networks can be pictured as frequency sensitive voltage dividers. At very low frequencies, X_C is very large and blocks low frequency tones from reaching the tweeter. A mirror situation occurs with the inductor/woofer variant. The crossover frequency is the frequency at which the reactance magnitude equals the resistance. Assuming simple 8Ω resistances for the woofer and tweeter, determine capacitor and inductor values that would yield a 1.5 kHz crossover frequency. How might this concept be extended to a mid-range loudspeaker that only produces tones in the middle of the musical frequency spectrum? (Note, this concept will be revisited in the final simulation problem, below, and also in the Simulation portion of Chapter 4 which covers series-parallel circuits.)

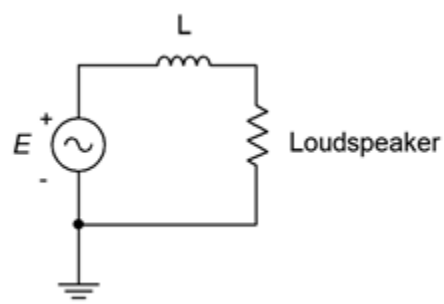

Figure $2.7.38$

Simulation

67. Simulate the solution of design problem 58 and determine if the values produce the required results.

68. Simulate the solution of design problem 59 and determine if the values produce the required results.

69. Simulate the solution of design problem 60 and determine if the values produce the required results. Hint: if the reactance/resistance magnitudes are the same, then the voltage magnitudes will be identical.

70. Simulate the solution of design problem 61 and determine if the values produce the required results. Hint: if the reactance/resistance magnitudes are the same, then the voltage magnitudes will be identical.

71. Simulate the solution of challenge problem 62 and determine if the new frequency produces the required results. Hint: if the reactance magnitudes are the same, then the voltage magnitudes will be identical. Further, their phases will cause these voltages to cancel, leaving the resistor voltage equal to the source voltage.

72. Using a transient analysis, crosscheck the crossover design of the final challenge problem, above. Plot the resistor (loudspeaker) voltage across the range of 100 Hz to 20 kHz for both sections.

This page titled 2.7: Exercises is shared under a CC BY-NC-SA 4.0 license and was authored, remixed, and/or curated by James M. Fiore via source content that was edited to the style and standards of the LibreTexts platform.

3: PARALLEL RLC CIRCUITS

Learning Objectives

After completing this chapter, you should be able to:

- Utilize Kirchhoff's current law, the current divider rule and Ohm's law to find branch currents in parallel RLC networks that utilize current sources or a single voltage source.
- Compute complex impedance and system voltage in parallel RLC circuits.
- Determine the equivalent value of multiple AC current sources in parallel.
- Draw phasor diagrams for impedance/susceptance and component currents in parallel RLC circuits.

3.1: Introduction

3.2: The Parallel Connection

3.3: Parallel Impedance

3.4: Parallel Circuit Analysis

3.5: Summary

3.6: Exercises

This page titled 3: Parallel RLC Circuits is shared under a CC BY-NC-SA 4.0 license and was authored, remixed, and/or curated by James M. Fiore via source content that was edited to the style and standards of the LibreTexts platform.

3.1: Introduction

In this chapter we introduce the analysis of AC RLC circuits configured in parallel. AC parallel circuits echo the characteristic of their DC counterpart and many of the solution techniques from DC analysis will be applicable here. This includes the use of Ohm's law and Kirchhoff's current law, along with the current divider rule. Generally, as with the series circuits presented in the previous chapter, reactance values will need to be computed from capacitor and inductor values before the main analysis may begin. Here, as in the most of the remaining chapters, we shall be concerned with determining the circuit response based on a source with a single frequency of excitation, in other words, a simple sine wave.

Parallel circuits are in many ways the complement of series circuits. The most notable characteristic of a parallel circuit is that it has only two nodes and each component is connected from one node to the other. There are no other connections with which to create a voltage divider. Consequently, all components see the same voltage. Currents divide among the components in proportion to their conductance/susceptance (i.e., in inverse proportion to their resistance/reactance).

The key to this is to remember that all computations involve vector quantities. This can lead to some surprising results for the uninitiated. For example, due to the 180 degree phase differential between inductors and capacitors, it is possible for an individual branch current to be greater than the source current. This does not violate Kirchhoff's current law, as we shall see. Indeed, it is reminiscent of a similar situation in AC series circuits where an individual component voltage can be greater than the source voltage without violating Kirchhoff's voltage law.

To clarify our analyses, we shall make considerable use of both time domain plots of currents as well as phasor diagrams.

This page titled 3.1: Introduction is shared under a CC BY-NC-SA 4.0 license and was authored, remixed, and/or curated by James M. Fiore via source content that was edited to the style and standards of the LibreTexts platform.

3.2: The Parallel Connection

A parallel connection is always characterized by having all components share just two nodes. There are no other junctions from which current can flow out of or into, or for voltage to split. Consequently,

$$\text{The voltage is the same everywhere in a parallel connection.}$$

Each component in such a connection will see the same voltage, regardless of whether it is a resistor, capacitor or inductor. Before the branch currents can be determined, the capacitive and inductive reactance values must be computed. As seen from prior work, these are obtained from the capacitor and inductor values, and based on the frequency of the driving source. Consequently, if this frequency were to change, the reactances would change, and this would in turn cause changes in the various component currents as well as the total current delivered by the source.

This page titled 3.2: The Parallel Connection is shared under a CC BY-NC-SA 4.0 license and was authored, remixed, and/or curated by James M. Fiore via source content that was edited to the style and standards of the LibreTexts platform.

3.3: Parallel Impedance

Perhaps the first order of business is to determine equivalent impedance values for some collection of parallel components. Recall that the reciprocal of reactance is **susceptance**,

$$S = \frac{1}{X} \tag{3.3.1}$$

and that the reciprocal of impedance is **admittance**,

$$Y = \frac{1}{Z} \tag{3.3.2}$$

The units are siemens for each. It is also worth noting that, due to the division, the signs reverse. For example, a capacitive susceptance has an angle of +90 degrees and if a complex admittance has a negative angle, then the associated impedance is inductive.

The "conductance rule" for parallel combinations studied in the DC case remains valid for the AC case, although we generalize it for impedances:

$$Z_{total} = \frac{1}{\frac{1}{Z_1} + \frac{1}{Z_2} + \frac{1}{Z_3} + \cdots + \frac{1}{Z_N}} \tag{3.3.3}$$

Each of the individual impedances presented in Equation 3.3.3 (i.e., Z_1, Z_2, etc) can represent a simple resistance, a pure reactance or a complex impedance. Further, the product-sum rule shortcut for two components also remains valid for AC components:

$$Z_{total} = \frac{Z_1 \times Z_2}{Z_1 + Z_2} \tag{3.3.4}$$

There is one special case where Equation 3.3.4 can be "troublesome", and that's when the two impedances consist of a pure capacitive reactance and a pure inductive reactance, both of the same magnitude. The two items will effectively cancel each other leaving a denominator of zero and an undefined result. While the theoretical combination "blows up" and approaches infinity, in reality it is limited by associated resistances such as R_{coil}, and arrives at some finite value This situation is studied in great depth in Chapter 8, which covers the concept of resonance.

Example 3.3.1

Determine the impedance of the network shown in Figure 3.3.1.

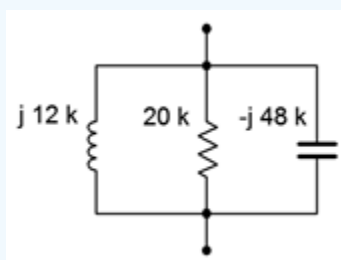

Figure 3.3.1: Circuit for Example 3.3.1.

Equation 3.3.3 would be best here.

$$Z_{total} = \frac{1}{\frac{1}{Z_1} + \frac{1}{Z_2} + \frac{1}{Z_3}}$$

$$Z_{total} = \frac{1}{\frac{1}{j12k\Omega} + \frac{1}{20k\Omega} + \frac{1}{-j48k\Omega}}$$

$$Z_{total} = 12.49E3\angle 51.3^{\circ}\Omega$$

This result might be a little surprising to the sharp-eyed. Notice that the magnitude of the total is larger than the magnitude of the smallest component (the inductor at $j12k\Omega$). This would never be the case if these three components were all resistors: the result would have to be smaller than the smallest element in the group.

The reason for this is that the capacitive reactance partially cancels the inductive reactance. If the product-sum rule (Equation 3.3.4) is used with these two components, the result is $16E3\angle 90^{\circ}$ or $j16k\Omega$. Placing that in parallel with the 20 kΩ resistor (again using Equation 3.3.4) leads to the result computed above.

An admittance diagram is illustrated in Figure 3.3.2. The vector summation of the component conductance and susceptances is verified nicely.

The individual component values are:

$$S_L = \frac{1}{j12k\Omega} \approx -j83.33E-6S$$

$$S_C = \frac{1}{-j48k\Omega} \approx j20.83E-6S$$

$$G = \frac{1}{20k\Omega} = 50E-6S$$

$$Y_{total} = \frac{1}{12.49E3\angle 51.3^{\circ}\Omega} \approx 80.1E-6\angle -51.3^{\circ}S$$

In rectangular form $Y_{total} = 50E-6 - j62.5E-6S$.

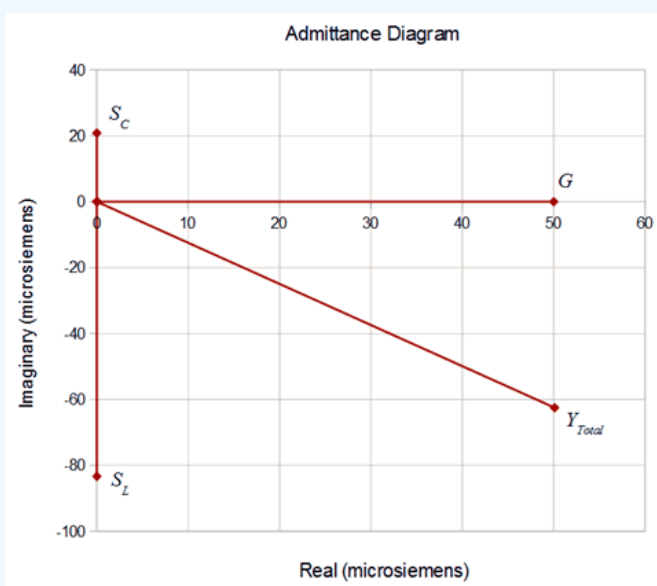

Figure 3.3.2: Admittance diagram for the network of Figure 3.3.1.

Example 3.3.2

Determine the impedance of the network shown in Figure 3.3.3 at a frequency of 10 kHz. Repeat this for a frequency of 1 kHz.

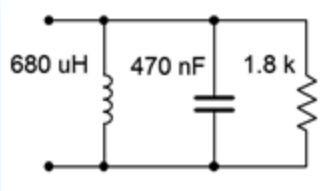

Figure 3.3.3: Circuit for Example 3.3.2.

First, find the reactances at 10 kHz. For the inductor we find:

$$X_L = j2\pi fL$$

$$X_L = j2\pi 10kHz680\mu H$$

$$X_L \approx j42.73\Omega$$

And for the capacitor:

$$X_C = -j\frac{1}{2\pi fC}$$

$$X_C = -j\frac{1}{2\pi 10kHz470nF}$$

$$X_C \approx -j33.86\Omega$$

Now use Equation 3.3.3 to combine the elements.

$$Z_{total} = \frac{1}{\frac{1}{Z_1} + \frac{1}{Z_2} + \frac{1}{Z_3}}$$

$$Z_{total} = \frac{1}{\frac{1}{j42.73\Omega} + \frac{1}{1.8k\Omega} + \frac{1}{-j33.86\Omega}}$$

$$Z_{total} = 162.6\angle -84.8^\circ\Omega$$

In rectangular form this is $14.68 - j161.9\Omega$. As the capacitor's reactance is the smallest of the three components, it dominates the equivalent impedance at this frequency. By working the capacitive reactance formula in reverse, it can be shown that the reactive portion of $-j161.9\Omega$ can achieved at this frequency by using a capacitance of 98.3 nF. That means that at 10 kHz, this parallel network has the same impedance as a 14.68 Ω resistor in series with a 98.3 nF capacitor. At any other frequency this will no longer be true, as will be illustrated momentarily.

At 1 kHz, the frequency is reduced by a factor of ten. Therefore, X_L will be ten times lower, or approximately $j4.273\Omega$. Further, X_C will be ten times higher, or about $-j338.6\Omega$. The inductive reactance will now dominate.

The new impedance is:

$$Z_{total} = \frac{1}{\frac{1}{Z_1} + \frac{1}{Z_2} + \frac{1}{Z_3}}$$

$$Z_{total} = \frac{1}{\frac{1}{j4.273\Omega} + \frac{1}{1.8k\Omega} + \frac{1}{-j338.6\Omega}}$$

$$Z_{total} = 4.328\angle 89.9^\circ\Omega$$

In rectangular form this is $10.4E-3+j4.328\Omega$. The result is inductive, the opposite of what we saw at 10 kHz. Using the inductive reactance formula, it can be shown that at 1 kHz this parallel network has the same impedance as a 10.4 milliohm resistor in series with a 689 μH inductor.

This page titled 3.3: Parallel Impedance is shared under a CC BY-NC-SA 4.0 license and was authored, remixed, and/or curated by James M. Fiore via source content that was edited to the style and standards of the LibreTexts platform.

3.4: Parallel Circuit Analysis

Kirchhoff's current law (KCL) is the operative rule for parallel circuits. It states that the sum of all currents entering and exiting a node must equal zero. Alternately, it can be stated as the sum of currents entering a node must equal the sum of currents exiting that node. As a pseudo formula:

$$\sum I \rightarrow = \sum I \leftarrow \tag{3.4.1}$$

A similar situation occurs in AC parallel circuits to that seen AC series circuits; namely that it appears that KCL (like KVL) is "broken". That is, a simplistic summing of the magnitudes of the currents might not balance. Once again, this is because the summation must be a vector summation, paying attention to the phase angles of each separate current.

It is possible to drive a parallel circuit with multiple current sources. These sources will add in much the same way that voltage sources in series add, that is, polarity and phase must be considered. Ordinarily, voltage sources with differing values are not placed in parallel as this violates the basic rule of parallel circuits (voltage being the same across all components).

The current divider rule remains valid for AC parallel circuits. Given two components, Z_1 and Z_2, and a current feeding them, I_T, the current through one of the components will equal the total current times the ratio of the opposite component over the sum of the impedance of the pair.

$$i_1 = i_T \frac{Z_2}{Z_1 + Z_2} \tag{3.4.2}$$

This rule is convenient in that the parallel equivalent impedance need not be computed, but remember, it is valid only when there are just two components involved.

When analyzing a parallel circuit, if it is being driven by a voltage source, then this same voltage must appear across each of the individual components. Ohm's law can then be used to determine the individual currents. According to KCL, the total current exiting the source must be equal to the sum of these individual currents. For example, in the circuit shown in Figure $3.4.1$, the voltage E must appear across both R and L. Therefore, the currents must be $i_L = E/X_L$ and $i_R = E/R$, and $i_{total} = i_L + i_R$. i_{total} can also be found be determining the parallel equivalent impedance of R and X_L, and then dividing this into E. This technique can also be used in reverse in order to determine a resistance or reactance value that will produce a given total current: dividing the source by the current yields the equivalent parallel impedance. As one of the two is already known, the known component can be used to determine the value of the unknown component via Equation 3.3.3.

Example $3.4.1$

Determine the currents in the circuit shown in Figure $3.4.1$ if the source is $10\angle 0^\circ$ volts peak, $X_L = j2k\Omega$ and $R = 1k\Omega$

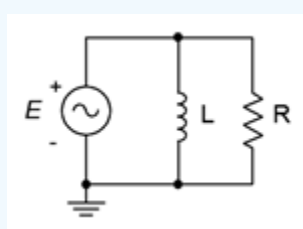

Figure $3.4.1$: A simple parallel RL circuit.

The same voltage must appear across all elements in a parallel connection. In this case that's $10\angle 0^\circ$ volts peak. The two branch currents are found via Ohm's law:

$$i_L = \frac{v}{Z}$$

$$i_L = \frac{10\angle 0^\circ V}{j2k\Omega}$$

$$i_L = 5E-3\angle -90^\circ A$$

$$i_R = \frac{v}{Z}$$

$$i_R = \frac{10\angle 0^\circ V}{1k\Omega}$$

$$i_R = 10E-3\angle 0^\circ A$$

The source current is the sum of the these two currents, or $11.18E-3\angle -26.6^\circ$ amps. This can be verified by determining the equivalent parallel impedance and then applying Ohm's law:

$$Z_T = \frac{Z_1 \times Z_2}{Z_1 + Z_2}$$

$$Z_T = \frac{1k\Omega \times j2k\Omega}{1k\Omega + j2k\Omega}$$

$$Z_T = 894\angle 26.6^\circ \Omega$$

As a side note, in rectangular form this is $800 + j400$, meaning that this parallel combination is equivalent to a series combination of an 800 ohm resistance and a 400 ohm inductive reactance. Continuing with Ohm's law, we have:

$$i_{Source} = \frac{v}{Z_T}$$

$$i_{Source} = \frac{10\angle 0^\circ V}{894\angle 26.6^\circ \Omega}$$

$$i_{Source} = 11.18E-3\angle -26.6^\circ A$$

A phasor diagram of the currents is shown in Figure $3.4.2$, below.

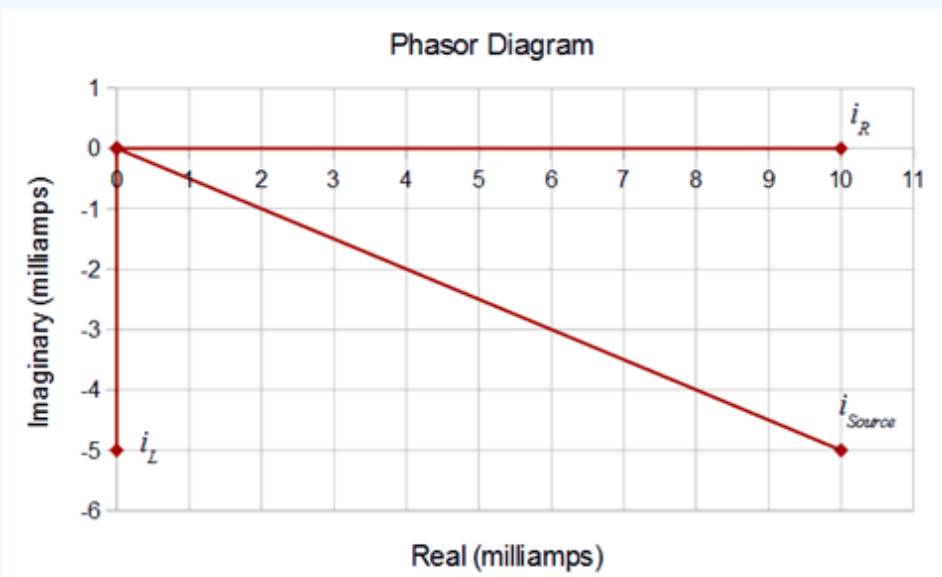

Figure $3.4.2$: Phasor diagram of currents in the circuit of Figure $3.4.1$.

Current Measurement in the Laboratory

At this point, a practical question arises; how do we verify these currents in the laboratory? After all, the preeminent measurement tool is the oscilloscope, and these are designed to measure voltage, not current. While it is possible to obtain current measurement probes, a simple method to measure current is to use a small current sensing resistor with a standard oscilloscope setup. We have seen already that the voltage across a resistor must be in phase with the current through it. Therefore,

whatever phase angle we see on a resistor's voltage, its current phase angle must be the same. The idea is to simply insert a resistor into the branch of which we wish to measure the current. As long as the resistance is much smaller than the impedance seen in the rest of that branch, it will have little impact on the precise value of the current. We can then place a probe across this sensing resistor to read its voltage. Ohm's law is then be used to determine the current's magnitude, while the phase angle is obtaining directly from the oscilloscope (again, because the sensing resistor's voltage must be in phase with its current, and thus the voltage phase angle is equal to the current phase angle). This technique will be illustrated in the simulation portion of the next example problem.

Example 3.4.2

Determine the branch currents in the circuit of Figure 3.4.3.

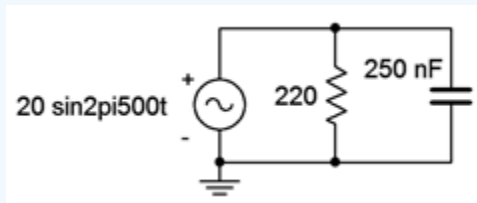

Figure 3.4.3: Circuit for Example 3.4.2.

The first step is to determine the capacitive reactance.

$$X_C = -j\frac{1}{2\pi fC}$$

$$X_C = -j\frac{1}{2\pi 500Hz250nF}$$

$$X_C \approx -j1273\Omega$$

Both the resistor and capacitor will see 20 volts peak from the source. Their currents can be determined via Ohm's law:

$$i_C = \frac{v}{X_C}$$

$$i_C = \frac{20V}{1273\angle -90^\circ\Omega}$$

$$i_C \approx 15.71E-3\angle 90^\circ A$$

$$i_R = \frac{v}{R}$$

$$i_R = \frac{20V}{220\angle 0^\circ\Omega}$$

$$i_R \approx 90.91E-3\angle 0^\circ A$$

The source current is the sum of these two currents, or $92.26E-3\angle 9.8^\circ$ amps. The source current may also be determined by dividing the source voltage by the equivalent parallel impedance, as follows.

$$Z_T = \frac{Z_1 \times Z_2}{Z_1 + Z_2}$$

$$Z_T = \frac{220\Omega \times (-j1273\Omega)}{220\Omega - j1273k\Omega}$$

$$Z_T = 216.8\angle -9.8^\circ\Omega$$

$$i_{Source} = \frac{v}{Z_T}$$

$$i_{Source} = \frac{20\angle 0^\circ V}{216.8\angle -9.8^\circ \Omega}$$

$$i_{Source} = 92.26E-3\angle 9.8^\circ A$$

A time domain plot of the currents is illustrated in Figure 3.4.4 along with a phasor plot in Figure 3.4.5. Note that the source current is close in both amplitude and phase to the resistor current. By comparison, the capacitor current is considerably smaller and with an obvious leading phase shift.

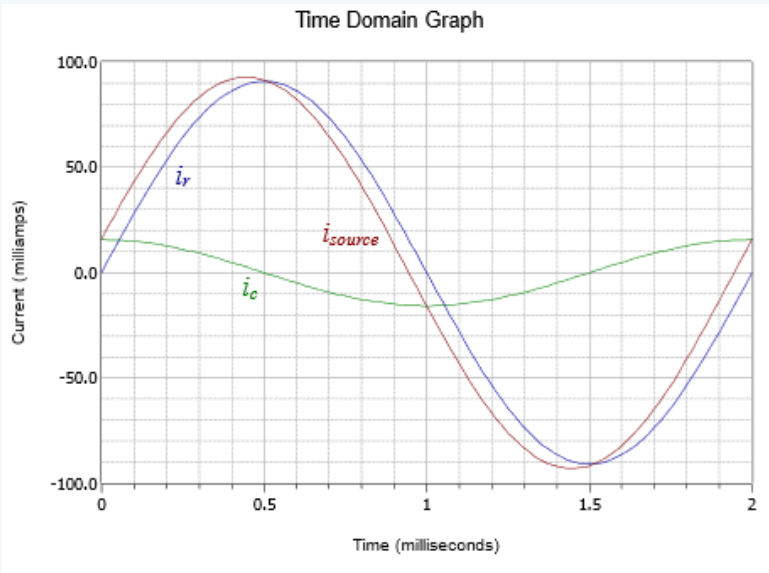

Figure 3.4.4: Current waveforms for the circuit of Figure 3.4.3.

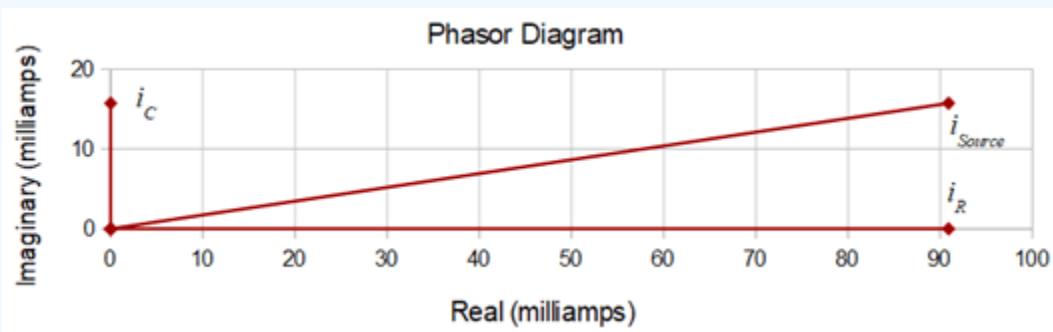

Figure 3.4.5: Phasor diagram for the circuit of Figure 3.4.3.

Computer Simulation

The circuit of Figure 3.4.3 is captured in a simulator as shown in Figure 3.4.6. Individual 2 ohm resistors are used to sense the currents in the resistor and capacitor branches. These sensing resistors are inserted directly above ground for convenience of measure. In this way a differential measurement is not needed.

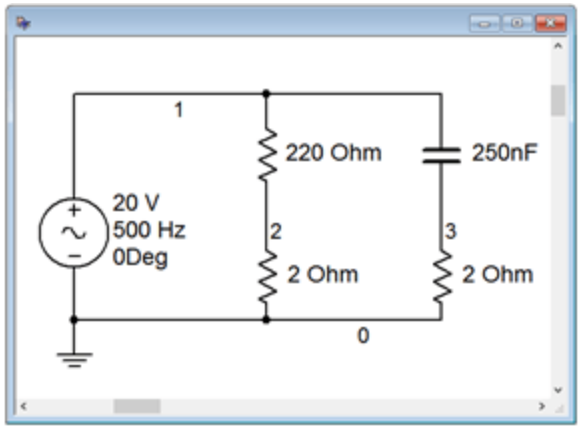

Figure 3.4.6: Circuit of Figure 3.4.3 in a simulator with added current sensing resistors.

The value of a sensing resistor needs to be considerably smaller than the impedance of the branch in which it is inserted. Two orders of magnitude (i.e., less than 1 %) would be a good place to start. While even smaller values will increase accuracy, from a practical standpoint in the lab, such tiny resistor values would produce extremely small voltages that would be difficult to measure with great accuracy.

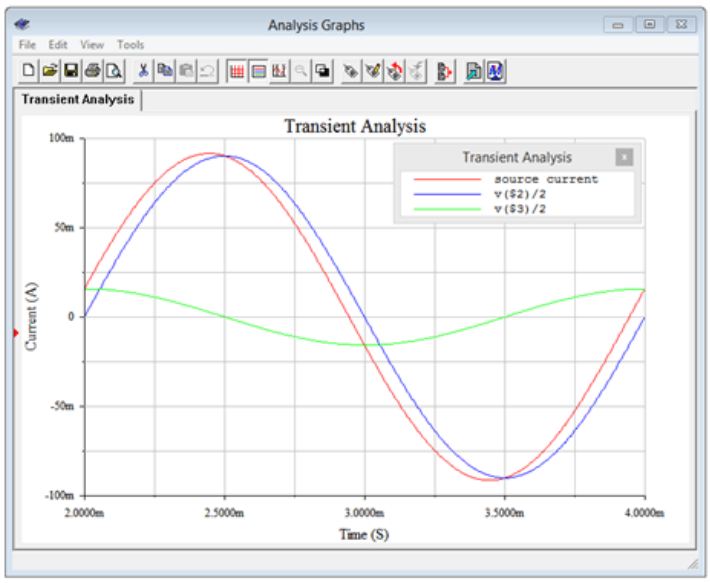

Figure 3.4.7: Simulation results for the circuit of Figure 3.4.6.

A basic transient analysis is then performed as shown in Figure 3.4.7. The results of the simulation are in tight agreement with the plot of Figure 3.4.4. Note that the plotted resistor and capacitor “currents” are, in fact, the voltages across the associated sensing resistors (nodes 2 and 3) divided by 2 (ohms), in direct application of Ohm's law. Not only does the simulation verify the results computed earlier, it also validates the concept of using small current sensing resistors in the laboratory.

Example 3.4.3

Determine the the branch currents in the circuit of Figure 3.4.8. Use the source voltage as the reference $(\angle 0^\circ)$.

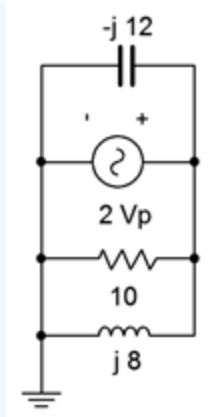

Figure 3.4.8: Circuit for Example 3.4.3.

Although this circuit is drawn a little differently than the prior examples, it remains a simple parallel circuit with just two nodes. Therefore, each element sees a 2 volt peak potential. Ohm's law will suffice to find the three component currents. These are then added to find the source current. Their reference directions are right-to-left given the source's polarity.

$$i_C = \frac{v}{X_C}$$

$$i_C = \frac{2\angle 0^\circ V}{12\angle -90^\circ \Omega}$$

$$i_C \approx 0.1667\angle 90^\circ A$$

$$i_L = \frac{v}{X_L}$$

$$i_L = \frac{2\angle 0^\circ V}{8\angle 90^\circ \Omega}$$

$$i_L = 0.25\angle -90^\circ A$$

$$i_R = \frac{v}{R}$$

$$i_R = \frac{2\angle 0^\circ V}{10\angle 0^\circ \Omega}$$

$$i_R = 0.2\angle 0^\circ A$$

The sum of these three currents is approximately $0.2167\angle -22.6^\circ$ amps. This value can be verified by finding the combined parallel impedance. Using Equation 3.3.3 it can be shown that this impedance is $9.231\angle 22.6^\circ \Omega$. Thus,

$$i_{Source} = \frac{v}{Z}$$

$$i_{Source} = \frac{2\angle 0^\circ V}{9.231\angle 22.6^\circ \Omega}$$

$$i_{Source} \approx 0.2167\angle -22.6^\circ A$$

A phasor diagram showing the vector summation of the currents is illustrated in Figure 3.4.9.

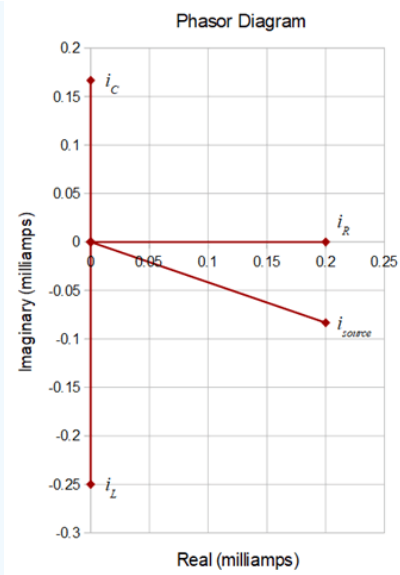

Figure $3.4.9$: Current phasor diagram for the circuit of Figure $3.4.8$.

Note that i_C and i_L are in perfect opposition as expected. Subtracting the magnitude of i_C from i_L leaves us with the precise vertical component of the source current.

If a parallel circuit is driven by a current source, as shown in Figure $3.4.10$, there are two basic methods of solving for the component currents. The first method is to use the current divider rule. If desired, the component voltage can then be found using Ohm's law. An alternate method involves finding the parallel equivalent impedance first and then using Ohm's law to determine the voltage (remember, being a parallel circuit, there is only one common voltage). Given the voltage, Ohm's law can be used to find the current through one component. To find the current through the other, either Ohm's law can be applied a second time or KCL may be used; subtracting the current through the first component from the source current. If there are more than two components, usually the second method would be the most efficient course of action.

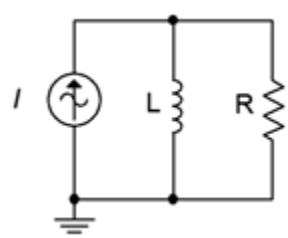

Figure $3.4.10$: Parallel network driven by a current source.

It is worth noting that both methods described above will yield the correct answers. One is not “more correct” than the other. We can consider each of these as a separate solution path; that is, a method of arriving at the desired end point. In general, the more complex the circuit, the more solution paths there will be. This is good because one path may be more obvious to you than another. It also allows you a means of crosschecking your work.

Example $3.4.4$

Determine the currents in the circuit of Figure $3.4.10$ if the source is 300 milliamps peak at 10 kHz, R is 750Ω and L is 15 mH.

The first step is to determine the inductive reactance.

$$X_L = j2\pi fL$$

$$X_L = j2\pi 10kHz15mH$$

$$X_L \approx j942.4\Omega$$

The current divider rule can be used to find the current through the resistor.

$$i_R = i_{Source}\frac{X_L}{R + X_L}$$

$$i_R = 0.3\angle 0^\circ A\frac{942.4\angle 90^\circ\Omega}{750\angle 0^\circ\Omega + 942.4\angle 90^\circ\Omega}$$

$$i_R = 0.2347\angle 38.5^\circ A$$

KVL can be used to find the remaining current through the inductor as the source current must equal the sum of the inductor and resistor currents. Therefore:

$$i_L = i_{Source} - i_R$$

$$i_L = 0.3\angle 0^\circ A - 0.2347\angle 38.5^\circ A$$

$$i_L = 0.1868\angle -51.5^\circ A$$

This value could also have been obtained by applying the current divider rule a second time:

$$i_L = i_{Source}\frac{R}{R + X_L}$$

$$i_L = 0.3\angle 0^\circ A\frac{750\angle 0^\circ\Omega}{750\angle 0^\circ\Omega + 942.4\angle 90^\circ\Omega}$$

$$i_L = 0.1868\angle -51.5^\circ A$$

A time domain plot of the current waveforms is shown in Figure 3.4.11.

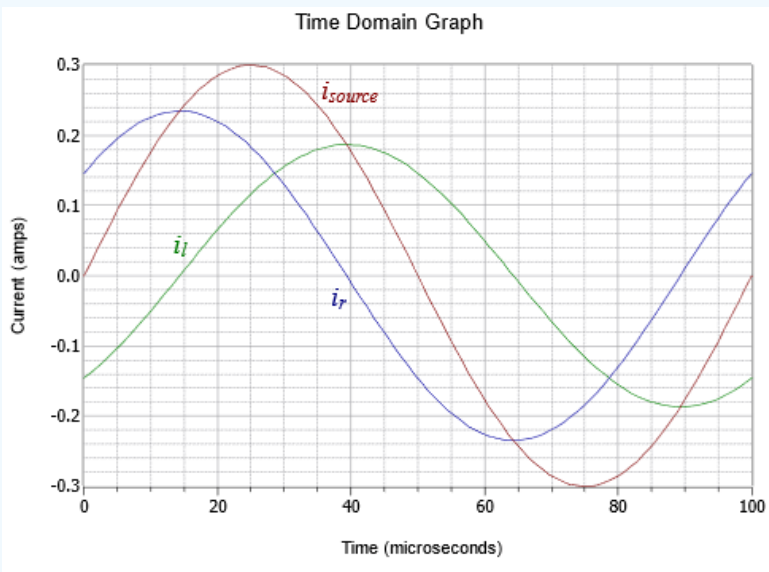

Figure 3.4.11: Current waveforms for the circuit of Example 3.4.4.

From the plot it is apparent that the inductor and resistor currents do indeed add up to the source current. Further, the current through the inductor is lagging, as expected.

Computer Simulation

The circuit of Example 3.4.4 is captured in a simulator as shown in Figure 3.4.12. A pair of 1 ohm current sensing resistors have

been added. By using 1 ohm, the sensing voltage will have the same magnitude as the current, with no scaling required.

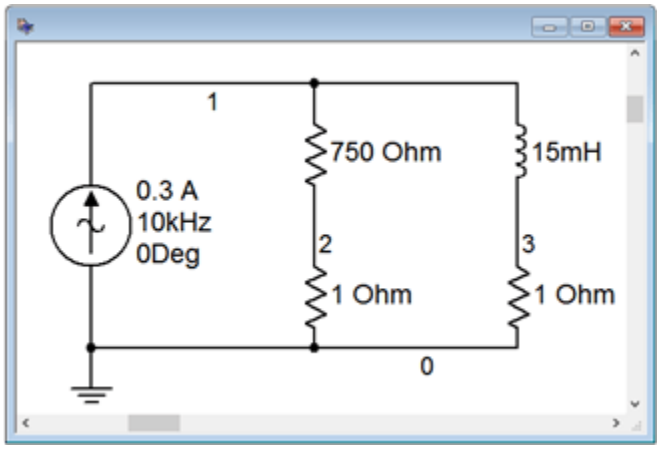

Figure 3.4.12: Circuit of Example 3.4.4 in a simulator.

A transient analysis is performed, plotting the voltages at nodes 2 and 3 along with their sum (the source current). The results are shown in Figure 3.4.3. The plot is delayed for a millisecond in order to avoid the initial power-up transient. The results are in full agreement with the plot of Figure 3.4.11.

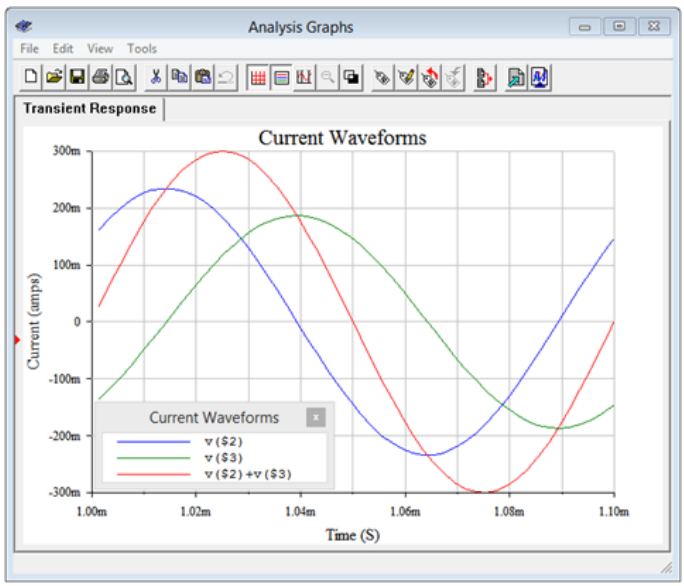

Figure 3.4.13: Results of the transient response simulation for the circuit of Example 3.4.5.

Example 3.4.5

Determine the branch currents in the circuit of Figure 3.4.14. Use the current source as the time reference (i.e., $\angle 0^\circ$).

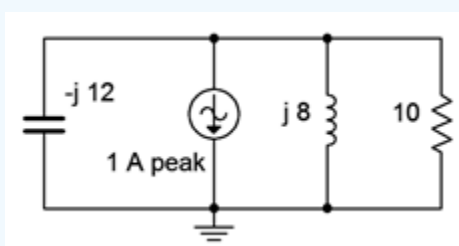

Figure 3.4.14: Circuit for Example 3.4.5.

Instead of using repeated current dividers here, we can instead find the equivalent impedance and then apply Ohm's law to determine the system voltage. Each branch current may be obtained by dividing this voltage by the impedance of that branch; a quick application of Ohm's law.

The system impedance is computed through Equation ??? as follows:

$$Z_{total} = \frac{1}{\frac{1}{Z_1} + \frac{1}{Z_2} + \frac{1}{Z_3}}$$

$$Z_{total} = \frac{1}{\frac{1}{-j12\Omega} + \frac{1}{j8\Omega} + \frac{1}{10\Omega}}$$

$$Z_{total} = 9.231\angle 22.6^\circ\Omega$$

The system voltage is found using Ohm's law. As the reference direction of the current source is flowing down into ground, the branch currents will be flowing up. This makes their voltage reference negative with respect to ground (i.e., + to – from bottom to top). We can deal with this by describing the current source as negative (i.e., flowing out of the top node). The source can be written as either $-1\angle 0^\circ$ or as $1\angle 180^\circ$, it makes no difference.

$$v = i_{source} \times Z_{total}$$

$$v = -1\angle 0^\circ A \times 9.231\angle 22.6^\circ$$

$$v \approx -9.231\angle 22.6^\circ V$$

This potential may also be written as $9.231\angle -157.4^\circ$ volts (remember, an inversion is the same as a 180 degree phase shift).

And now for the branch currents:

$$i_C = \frac{v}{X_C}$$

$$i_C = \frac{9.231\angle -157.4^\circ V}{12\angle -90^\circ\Omega}$$

$$i_C \approx 0.7692\angle -67.4^\circ A$$

$$i_L = \frac{v}{X_L}$$

$$i_L = \frac{9.231\angle -157.40^\circ V}{8\angle 90^\circ\Omega}$$

$$i_L = 1.154\angle 112.6^\circ A$$

$$i_R = \frac{v}{R}$$

$$i_R = \frac{9.231\angle -157.4^\circ V}{10\angle 0^\circ\Omega}$$

$$i_R = 0.9231\angle -157.4^\circ A$$

The sum of these three currents is approximately $1\angle 180^\circ$ amps (i.e., $-1\angle 0^\circ$), the value of the current source, as expected.

A phasor diagram of the currents is plotted in Figure $3.4.15$.

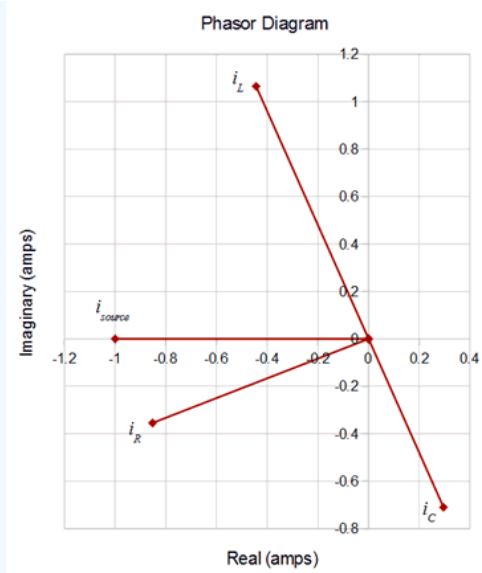

Figure $3.4.15$: Current phasor diagram for the circuit of Figure $3.4.13$.

Now for the sneaky bit. In case you didn't notice, the components in this circuit are identical to those of Figure $3.4.8$ with the exception of the source. As a consequence, the phase angles and magnitudes of the branch currents through the three components will remain unchanged relative to each other. Due to the change in both magnitude and direction of the source, the entire phasor plot has been rotated clockwise by 154.7 degrees and all of the magnitudes have been lengthened by the ratio of the voltages $(9.231/2)$. This is perhaps easiest to see by focusing on the vector for i_{source} in Figure $3.4.9$. Rotate that vector clockwise, along with every other vector, until i_{source} lines up with the negative real axis. The result is the plot of Figure $3.4.15$, albeit with newly lengthened magnitudes.

If a parallel circuit contains multiple current sources, they may be added together (a vector sum, of course) to generate an equivalent single current source. The analysis then proceeds as before. This is demonstrated in the following example.

Example $3.4.6$

For the circuit of Figure $3.4.16$, determine the currents through the capacitor, inductor and resistor, and also determine the system voltage. i_1 is $0.5\angle 0^\circ$ amps and i_2 is $3\angle 45^\circ$ amps.

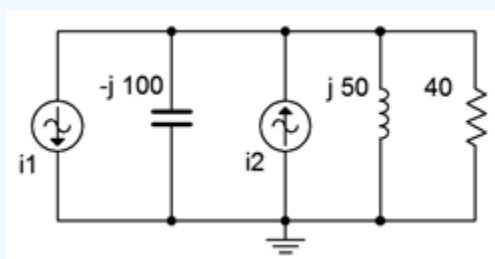

Figure $3.4.16$: Circuit for Example $3.4.6$.

The first step here is to determine the effective current driving the circuit. If we treat the top node as positive, i_2 is entering (positive) while i_1 is exiting (negative). The combination is:

$$i_{total} = i_1 + i_2$$

$$i_{total} = -0.5\angle 0^\circ A + 3\angle 45^\circ A$$

$$i_{total} = 2.67\angle 52.6^\circ A$$

This current has the same reference direction as source two. A phasor diagram of the process is illustrated in Figure 3.4.17 to help visualize the vector addition.

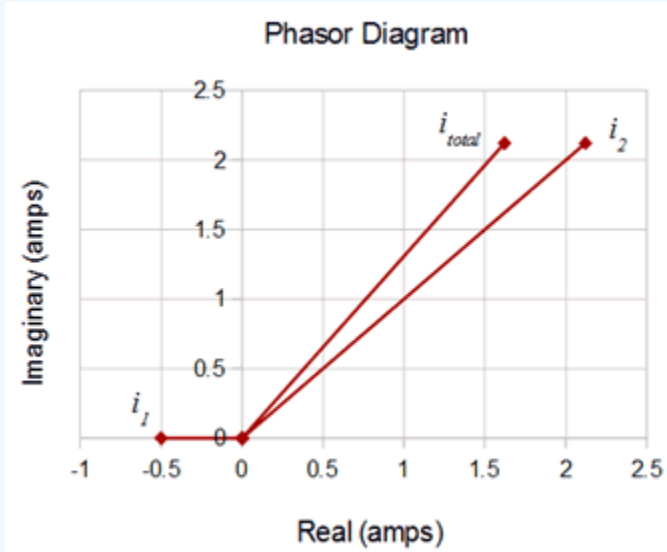

Figure 3.4.17: Phasor diagram of the combined current sources for the circuit for Example 3.4.6.

The next step is to find the combined impedance so that we can find the applied voltage.

$$Z_{total} = \frac{1}{\frac{1}{Z_1} + \frac{1}{Z_2} + \frac{1}{Z_3}}$$

$$Z_{total} = \frac{1}{\frac{1}{-j100\Omega} + \frac{1}{j50\Omega} + \frac{1}{40\Omega}}$$

$$Z_{total} = 37.14\angle 21.8^\circ\Omega$$

$$v = i_{source} \times Z_{total}$$

$$v = 2.67\angle 52.6^\circ A \times 37.14\angle 21.8^\circ$$

$$v \approx 99.16\angle 74.4^\circ V$$

We now apply Ohm's law to each of the components to determine the branch currents.

$$i_C = \frac{v}{X_C}$$

$$i_C = \frac{99.16\angle 74.4^\circ V}{100\angle -90^\circ\Omega}$$

$$i_C \approx 0.9916\angle 164.4^\circ A$$

$$i_L = \frac{v}{X_L}$$

$$i_L = \frac{99.16\angle 74.4^\circ V}{50\angle 90^\circ\Omega}$$

$$i_L = 1.983\angle -15.6^\circ A$$

$$i_R = \frac{v}{R}$$

$$i_R = \frac{99.16\angle 74.4^\circ V}{40\angle 0^\circ\Omega}$$

$$i_R = 2.479\angle 74.4^\circ A$$

The sum of these three currents is approximately $2.67\angle 52.6^\circ$ amps. This balances the net entering current from the two sources, verifying KVL.

This page titled 3.4: Parallel Circuit Analysis is shared under a CC BY-NC-SA 4.0 license and was authored, remixed, and/or curated by James M. Fiore via source content that was edited to the style and standards of the LibreTexts platform.

3.5: Summary

In this chapter we have examined parallel circuits using either a single voltage source, or one or more AC current sources, along with two or more resistors, capacitors and inductors. The defining characteristic of a parallel configuration is that all components are connected to just two nodes and that all elements in this configuration see the same voltage. If multiple AC current sources are present, they may be combined into a single equivalent current source via vector addition.

Unlike the purely resistive case, the equivalent impedance of a group of parallel RLC components will not always be smaller than the smallest resistance or reactance in the group due to cancellations between the inductance and capacitance. As voltage is identical for all components, then the currents through the capacitors must be 180 degrees out of phase with the currents through the inductors. Thus it is quite possible that the current through one of the reactance branches could be larger than the current supplied by the source. In general, the effective impedance is found by summing the individual conductances and susceptances to find the total admittance of the group, and then taking the reciprocal of this value. The product-sum rule may be used so long as the angles are taken into account (i.e., a vector process).

Kirchhoff's current law (KCL) states that the sum of currents entering a node must equal the sum of currents leaving that node. This remains true for AC circuit analysis, however, it must be remembered to always use a vector summation. A simple summation of current magnitudes will not achieve proper results.

Individual branch currents in a circuit driven by a voltage source may be determined by using Ohm's law: simply divide the source voltage by the individual resistance and reactance values. These branch currents must sum to the total current delivered by the voltage source thanks to KCL. If the parallel network is driven by current sources, the individual branch currents can be found by first determining the effective parallel impedance and then using Ohm's law to find the system voltage. Once the voltage is known, Ohm's law is used again on each component to find the associated branch current. Alternately, the current divider rule may be used repeatedly on successive pairings of components.

Review Questions

1. How is the equivalent impedance for a group of parallel connected resistors, inductors and capacitors computed?

2. How is the equivalent value for parallel connected AC current sources computed?

3. Is the product-sum rule still applicable for AC analysis? Can it be used for reactance and/or complex impedance?

4. Define Kirchhoff's current law for AC circuit analysis.

5. Is it possible for a branch current to be larger than the source current in an AC parallel circuit? Explain why/why not.

This page titled 3.5: Summary is shared under a CC BY-NC-SA 4.0 license and was authored, remixed, and/or curated by James M. Fiore via source content that was edited to the style and standards of the LibreTexts platform.

3.6: Exercises

Analysis

1. Determine the effective impedance of the network shown in Figure 3.6.1 at 10 MHz.

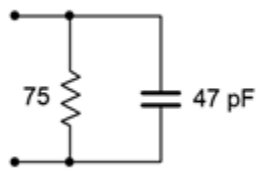

Figure 3.6.1

2. Determine the effective impedance of the network shown in Figure 3.6.2 at 100 Hz.

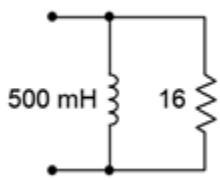

Figure 3.6.2

3. Determine the effective impedance of the network shown in Figure 3.6.3 at 5 kHz.

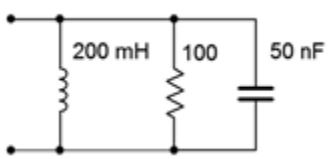

Figure 3.6.3

4. Determine the effective impedance of the network shown in Figure 3.6.4 at 20 kHz.

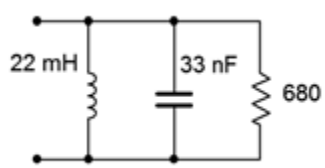

Figure 3.6.4

5. Determine the effective impedance of the network shown in Figure 3.6.5.

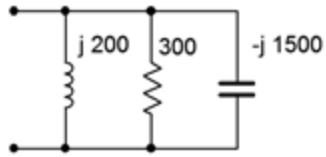

Figure 3.6.5

6. Determine the effective impedance of the network shown in Figure 3.6.5 if the frequency is halved and if the frequency is doubled.

7. For the network shown in Figure 3.6.1, determine the frequency below which the impedance is mostly resistive.

8. For the network shown in Figure 3.6.2, determine the frequency below which the impedance is mostly inductive.

9. Draw phasor impedance plot for problem 1.

10. Draw phasor impedance plot for problem 2.

11. Determine the three branch currents for the circuit shown in Figure 3.6.6 and draw their phasor diagram.

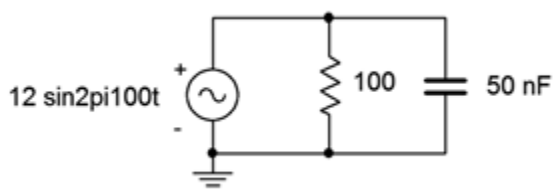

Figure 3.6.6

12. Determine the three branch currents for the circuit shown in Figure 3.6.7 and draw their phasor diagram.

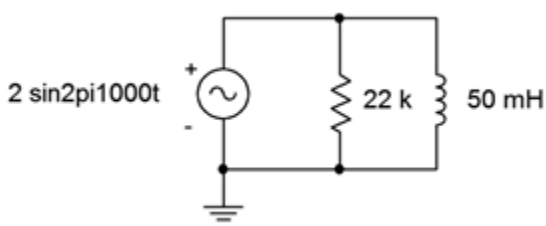

Figure 3.6.7

13. Determine the four branch currents for the circuit shown in Figure 3.6.8 and draw their phasor diagram.

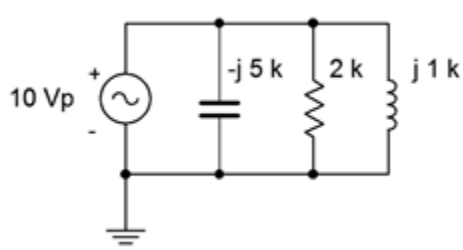

Figure 3.6.8

14. Determine all of the branch currents for the circuit shown in Figure $3.6.9$ assuming E is a 1 volt RMS sine.

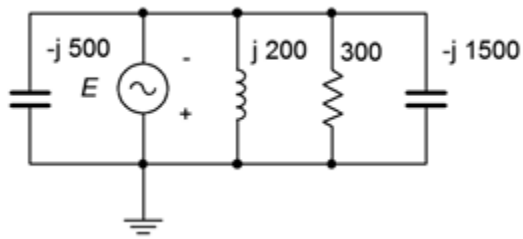

Figure $3.6.9$

15. Determine all of the branch currents for the circuit shown in Figure $3.6.10$ given E = 10 volt peak sine, R = 220, $X_C = -j500$. and $X_L = j1.5$ k.

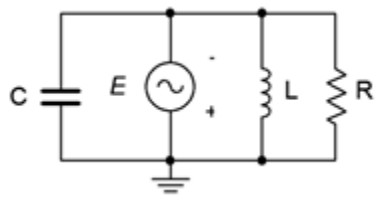

Figure $3.6.10$

16. Determine all of the branch currents for the circuit shown in Figure $3.6.11$ given E = 2 volt peak sine, R = 1 k, $X_C = -j2$ k. and $X_L = j3$ k.

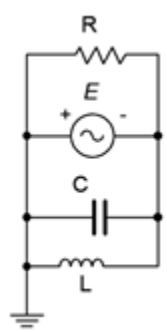

Figure $3.6.11$

17. Determine the component currents for the circuit shown in Figure $3.6.12$. Draw phasor diagram of the source and branch currents.

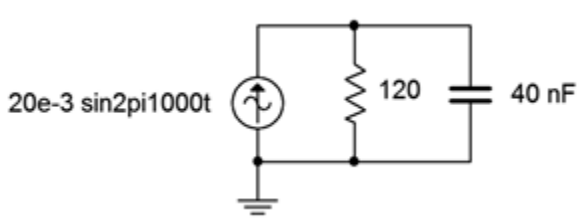

Figure $3.6.12$

18. Determine the resistor and capacitor voltages for the circuit shown in Figure $3.6.12$.

19. Determine the resistor and inductor voltages for the circuit shown in Figure $3.6.13$.

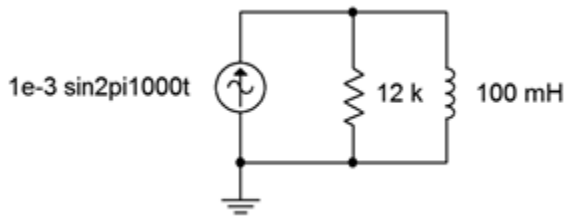

Figure $3.6.13$

20. Determine the component currents for the circuit shown in Figure $3.6.13$. Draw phasor diagram of the source and branch currents.

21. Determine the source voltage for the circuit shown in Figure $3.6.14$.

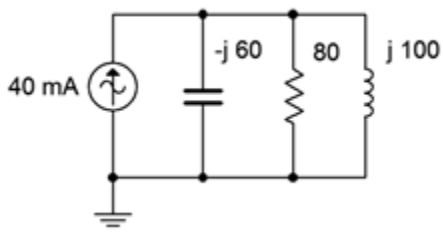

Figure $3.6.14$

22. Determine the component currents for the circuit shown in Figure $3.6.14$. Draw the phasor diagram of the source and branch currents.

23. Determine the component currents for the circuit shown in Figure $3.6.15$. I is 20 mA at 0 degrees.

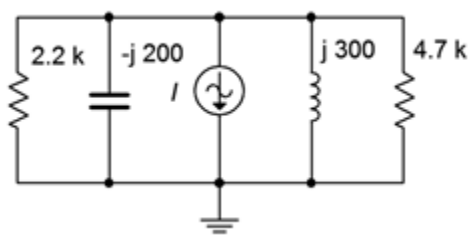

Figure $3.6.15$

24. Determine the source voltage for the circuit shown in Figure $3.6.15$. I is 20 mA at 0 degrees.

25. Determine the source voltage for the circuit shown in Figure $3.6.16$. Assume $I1$ is 1 mA at 0 degrees and $I2$ is 2 mA at +90 degrees.

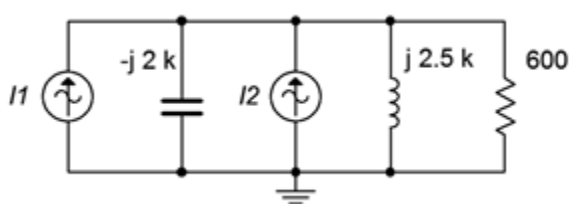

Figure $3.6.16$

26. Determine the capacitor and inductor currents in the circuit of Figure $3.6.16$. Assume $I1$ is 1 mA at 0 degrees and $I2$ is 2 mA at +90 degrees.

27. Determine the resistor and capacitor currents in the circuit of Figure $3.6.17$. Assume $I1$ is $2\angle 0^\circ$ amps and $I2$ is $0.5\angle 45^\circ$.

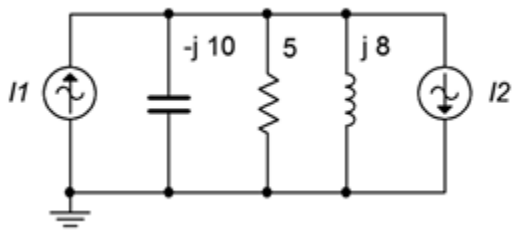

Figure $3.6.17$

28. Determine the source voltage for the circuit shown in Figure $3.6.17$. Assume $I1$ is $2\angle 0^\circ$ A and $I2$ is $0.5\angle 45^\circ$.

Design

29. For the network shown in Figure $3.6.18$, determine a value of C such that the impedance magnitude of the circuit is 1 kΩ. The source is a 50 Hz sine and R is 2.2 kΩ.

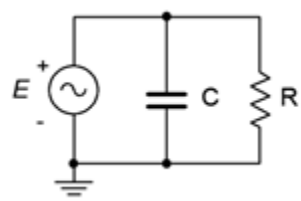

Figure $3.6.18$

30. For the network shown in Figure $3.6.19$, determine a value of L such that the impedance magnitude of the circuit is 2 kΩ. The source is a 2 MHz sine and R is 3.3 kΩ.

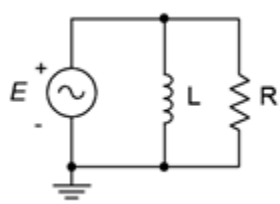

Figure $3.6.19$

31. For the circuit shown in Figure $3.6.18$, determine a value for C such that the magnitude of the source current is 1 mA. E is a 2 volt 10 kHz sine and R = 8 kΩ.

32. For the network shown in Figure $3.6.19$, determine a value for L such that the magnitude of the source current is 10 mA. E is a 25 volt 100 kHz sine and R = 4 kΩ.

33. For the network shown in Figure $3.6.20$, determine a value of C such that the impedance magnitude of the circuit is 10 k Ω. The source is a 440 Hz sine and R is 33 kΩ.

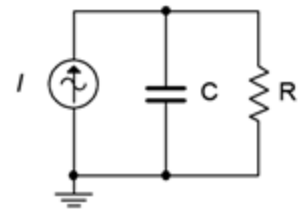

Figure $3.6.20$

34. For the network shown in Figure $3.6.21$, determine a value of L such that the impedance magnitude of the circuit is 200 Ω. The source is a 60 Hz sine and R is 680 Ω.

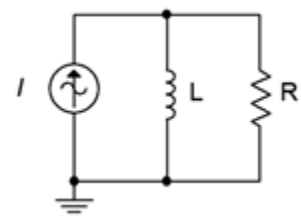

Figure $3.6.21$

35. For the circuit shown in Figure $3.6.20$, determine a value for C such that the magnitude of the circuit voltage is 200 volts. The source current is a 100 mA 1200 Hz sine and R = 15 kΩ.

36. For the circuit shown in Figure $3.6.21$, determine a value for L such that the magnitude of the circuit voltage is 50 volts. The source current is a 2.3 A 60 Hz sine and R = 330 Ω.

37. Given the circuit shown in Figure $3.6.18$, determine a value for C such that the impedance angle is –45 degrees. The source a 1 volt peak sine at 600 Hz and R = 680 Ω.

38. Given the circuit shown in Figure $3.6.19$, determine a value for L such that the impedance angle is 45 degrees. The source a 10 volt peak sine at 100 kHz and R = 1.2 kΩ.

39. Determine a value for C such $|X_C| = |X_L|$ for the circuit shown in Figure $3.6.22$. The source frequency is 1 kHz, R = 200 Ω and L = 50 mH.

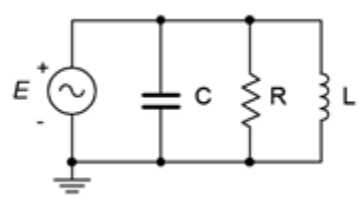

Figure $3.6.22$

40. Determine a value for L such $|X_C| = |X_L|$ for the circuit shown in Figure $3.6.23$. The source frequency is 22 kHz, R = 18 kΩ and C = 5 nF.

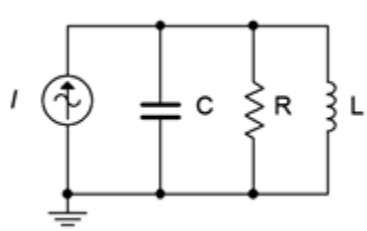

Figure $3.6.23$

41. Add one or more components in parallel with the circuit of Figure $3.6.2$ such that the resulting impedance at 20 Hz is 10 Ω with a phase angle of at least +30°.

Challenge

42. Determine a value for C such that the impedance angle for the circuit shown in Figure $3.6.22$ is purely resistive (0 degrees). The source frequency is 1 kHz, R = 200 Ω and L = 50 mH.

43. Is it possible to change the value of the resistor in Figure $3.6.14$ so that the system voltage is 4 volts? If so, what is the value? If not, why not?

44. Is it possible to change the value of the inductor and/or capacitor in Figure $3.6.14$ so that the system voltage is 4 volts? If so, what is/are the values? If not, why not?

45. Assume you are troubleshooting a circuit like the one shown in Figure $3.6.23$. I is a 10 mA peak sine at 2 kHz, R = 390 Ω, C = 200 nF and L = 25 mH. The measured resistor voltage is a little under 2.5 volts. What is the likely culprit?

46. Given the circuit shown in Figure $3.6.23$, find the values for C and L if the source is a sine wave at 1 kHz, R = 4 kΩ, i_{Source} = 3 mA, i_R = 2 mA, i_L = 5 mA,

Simulation

47. Using a transient analysis simulation, verify that the source current magnitude is 1 mA using the capacitor value determined in design problem 31.

48. Using a transient analysis simulation, verify that the source current magnitude is 10 mA using the inductor value determined in design problem 32.

49. Using a transient analysis simulation, verify that the source voltage magnitude is 200 volts using the capacitor value determined in design problem 35.

50. Using a transient analysis simulation, verify that the source voltage magnitude is 50 volts using the inductor value determined in design problem 36.

51. Using a transient analysis simulation, verify the design solution for problem 39. This can be checked by seeing if the current magnitudes in C and L are identical.

52. Using a transient analysis simulation, verify the design solution for problem 40. This can be checked by seeing if the current magnitudes in C and L are identical.

53. Impedance magnitude as a function of frequency can be investigated by driving the circuit with a fixed amplitude current source across a range of frequencies. The resulting voltage will be proportional to the effective impedance. Investigate this effect by performing an AC analysis on the circuits shown in Figures $3.6.12$ and $3.6.13$. Use a frequency range of 10 Hz to 1 MHz. Before running the simulations, sketch your expected results.

54. Following the idea presented in the previous problem, investigate the impedance as a function of frequency of the circuit shown in Figure $3.6.23$. Use R = 1 k, C = 10 nF, and L = 1 mH. Run the simulation from 100 Hz to 10 MHz. Make sure to sketch your expected results first.

This page titled 3.6: Exercises is shared under a CC BY-NC-SA 4.0 license and was authored, remixed, and/or curated by James M. Fiore via source content that was edited to the style and standards of the LibreTexts platform.

4: SERIES-PARALLEL RLC CIRCUITS

Learning Objectives

After completing this chapter, you should be able to:

- Identify series-only and parallel-only sub-groups in series-parallel RLC networks.
- Compute complex equivalent impedance for series-parallel RLC circuits.
- Simplify an entire RLC network into a simple series or parallel equivalent comprised of complex impedances.
- Utilize KVL, KCL and other techniques to find various voltages and currents in series-parallel RLC networks driven by a single effective voltage or current source.
- Interpret phasor diagrams and time domain plots for component voltages and/or currents in seriesparallel RLC circuits.

4.1: Introduction

4.2: The Series-Parallel Connection

4.3: Series-Parallel Impedance

4.4: Series-Parallel Circuit Analysis

4.5: Summary

4.6: Exercises

This page titled 4: Series-Parallel RLC Circuits is shared under a CC BY-NC-SA 4.0 license and was authored, remixed, and/or curated by James M. Fiore via source content that was edited to the style and standards of the LibreTexts platform.

4.1: Introduction

Having completed our examination of strictly series and strictly parallel AC circuits, we turn our attention now to somewhat more complex circuits, namely those circuits comprised of components in mixed series-parallel arrangements. This chapter deals with a subset of series-parallel RLC circuits, specifically those that are driven by a single effective current or voltage source, and which may be simplified using series and parallel component combinations. The rules and techniques explored for strictly series networks are still applicable to series connected subsections of larger circuits. The same is true for the rules and techniques established for strictly parallel circuits regarding parallel subsections. Thus, the key to analyzing series-parallel circuits is in recognizing those portions of the circuit that form series or parallel sub-circuits, and then applying the series and parallel analysis rules to those sections. Ohm's law, KVL and KCL may be used in turn to solve portions of the problem until all currents and voltages are found. As individual voltages and currents are determined, this makes it easier to apply these rules to determine other values.

It is often useful to determine the effective impedance of individual sections at the outset in order to facilitate circuit analysis. Indeed, continuing the process until the entire network is reduced to a series-only or parallelonly simplified version is a good starting point. That is, each of the complex impedances that make up the series-only or parallel-only simplified equivalent is made up from a sub-circuit which in turn potentially is made up of other sub-circuits, and so on. The art of examining a complex series-parallel network and being able to immediately determine which elements constitute a series connection and which constitute a parallel connection is an essential skill and worthy of practice.

This page titled 4.1: Introduction is shared under a CC BY-NC-SA 4.0 license and was authored, remixed, and/or curated by James M. Fiore via source content that was edited to the style and standards of the LibreTexts platform.

4.2: The Series-Parallel Connection

Consider the circuit of Figure $4.2.1$. This circuit is neither just a series circuit nor just a parallel circuit. If it was a series circuit then the current through all components would have to be same, that is, there would no nodes where the current could divide. This is clearly not the case as the current flowing through the capacitor can divide at node b, with one portion flowing down through the resistor and the remainder through the inductor. On the other hand, if it was strictly parallel, then all of the components would have to exhibit the same voltage and therefore there would be only two connection points in the circuit. This is also not the case as there are three such points: a, b and ground.

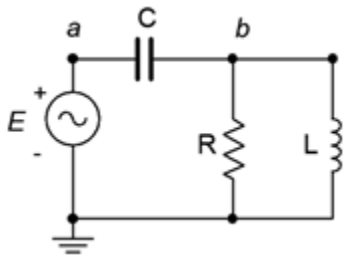

Figure $4.2.1$: A simple series-parallel RLC circuit.

What is true for the circuit of Figure $4.2.1$ is that the resistor and the inductor are in parallel. We know this because both components are attached to the same two nodes; b and ground, and must exhibit the same voltage, v_b. As such, we can find the equivalent impedance of this pair and treat the result as a single value, let's call it Z_P. In this newly simplified circuit, Z_P is in series with the capacitor and the source. We have simplified the original circuit into a series circuit and thus the series circuit analysis rules may be applied.

This page titled 4.2: The Series-Parallel Connection is shared under a CC BY-NC-SA 4.0 license and was authored, remixed, and/or curated by James M. Fiore via source content that was edited to the style and standards of the LibreTexts platform.

4.3: Series-Parallel Impedance

The rules for combining resistors, capacitors and inductors in AC series-parallel circuits are similar to those established for combining resistors in DC circuits. Obviously, the first item is to determine the reactances of the capacitors and inductors. At that point, simple series and parallel combinations can be identified. These combinations are each reduced to a complex impedance. Once this is completed, the network is examined again to see if these new complex impedances can be identified as parts of new series or parallel sub-circuits, and simplified. This process is repeated until we are left with a single complex impedance. Again, it is useful to remember that the phase angles of the reactive components can sometimes lead to surprising results, such as a series sub-circuit having an impedance magnitude smaller than its largest component — something that would never happen with a network comprised of just resistors. The importance of using vector computations cannot be over stressed.

Let's begin with a relatively simple series-parallel RLC network where the reactance values have already been found.

Example 4.3.1

Determine the equivalent impedance of the network shown in Figure 4.3.1.

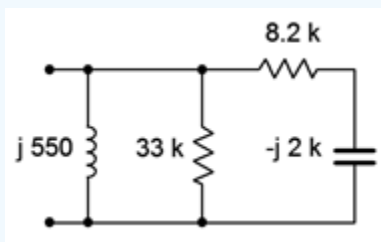

Figure 4.3.1: Network for Example 4.3.1.

Looking in from the left side, we note that the inductor and 33 kΩ resistor are in parallel as they are both tied to the same two nodes. Also, we can see that the capacitor is in series with the 8.2 kΩ resistor. This series combination is, in turn, in parallel with the other two parallel components. Thus, it would make sense to find the series combination first.

$$Z_{series} = R + (-jX_C)$$

$$Z_{series} = 8.2k\Omega - j2k\Omega$$

$$Z_{series} = 8440\angle -13.7^\circ\Omega$$

We now place this new complex impedance in parallel with the inductor and the 33 kΩ resistor.

$$Z_{total} = \frac{1}{\frac{1}{Z_1} + \frac{1}{Z_2} + \frac{1}{Z_3}}$$

$$Z_{total} = \frac{1}{\frac{1}{j550\Omega} + \frac{1}{33k\Omega} + \frac{1}{8440\angle -13.7^\circ\Omega}}$$

$$Z_{total} = 556.8\angle 85.4^\circ\Omega$$

Clearly, the inductor dominates here. The parallel resistor is roughly two orders of magnitude larger than the inductive reactance and has minimal impact on a parallel combination. Further, the complex impedance derived from the capacitor/resistor combination is also considerably larger, and given that it has a negative (capacitive) phase angle, it partly cancels the inductive reactance. This leaves us with a magnitude a little higher than that of the inductive reactance alone, and with a phase angle shifted toward the resistive side.

The series and parallel combinations can be much more complicated than that of the prior network. Ladder networks, for example, feature a set of sections that load other sections, resulting in repeated series and then parallel simplifications. In this situation, it is best to start work at the end farthest from the nodes of interest. The following example will illustrate this on a modest scale.

Example 4.3.2

Determine the equivalent impedance of the network shown in Figure 4.3.2.

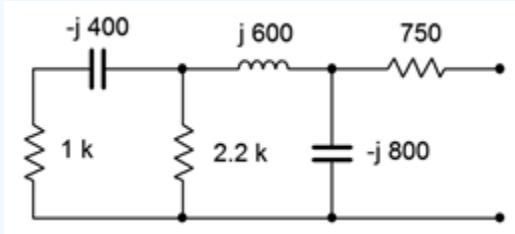

Figure 4.3.2: Network for Example 4.3.2.

Looking in from the right side, we see immediately the 750 Ω resistor. This is in series with the sub-circuit comprised of the remaining five components. This sub-circuit can be seen as the $-j800\Omega$ capacitor in parallel with another sub-circuit containing the other four components. This four component subcircuit consists of the inductor in series with yet another sub-circuit consisting of the final two resistors and capacitor. This three element subcircuit consists of the 2.2 k Ω resistor in parallel with the series combination of the 1 kΩ resistor and the $-j400\Omega$ capacitor.

The most sensible way to approach this is to start at the left end with the simple RC series combination and then work right, toward the nodes of interest. We'll number the components from left to right for identification.

$$Z_{left2} = R_1 + (-jX_{C1})$$

$$Z_{left2} = 1k\Omega - j400\Omega$$

$$Z_{left2} = 1077\angle -21.8^\circ\Omega$$

We now place this complex impedance in parallel with the 2.2 kΩ resistor. This creates a three element sub-circuit which is in series with the inductor.

$$Z_{left3} = \frac{1}{\frac{1}{R_2} + \frac{1}{Z_{left2}}}$$

$$Z_{left3} = \frac{1}{\frac{1}{2.2k\Omega} + \frac{1}{1077\angle -21.8^\circ\Omega}}$$

$$Z_{left3} = 734.7\angle -14.7^\circ\Omega$$

$$Z_{left4} = Z_{left3} + jX_L$$

$$Z_{left4} = 734.7\angle -14.7^\circ\Omega + j600\Omega$$

$$Z_{left4} = 822.5\angle 30.2^\circ\Omega$$

This group of four is in parallel with the second capacitor of $-j800\Omega$. Finally, we arrive at the equivalent total value by placing the resulting group of five in series with the 750 Ω resistor.

$$Z_{left5} = \frac{1}{\frac{1}{X_{C2}} + \frac{1}{Z_{left4}}}$$

$$Z_{left5} = \frac{1}{\frac{1}{-j800\Omega} + \frac{1}{822.5\angle 30.2^\circ\Omega}}$$

$$Z_{left5} = 813.4\angle -31.3^\circ\Omega$$

$$Z_{total} = Z_{left5} + R_3$$

$$Z_{total} = 813.4\angle -31.3^\circ\Omega + 750\Omega$$

$$Z_{total} = 1506\angle -16.3^{\circ}\Omega$$

In rectangular form this is 1443 $-j422.3\Omega$, meaning that this network is equivalent to a 1443 Ω resistor in series with a capacitive reactance of $-j422.3\Omega$.

Series-parallel simplification techniques will not work for all circuits. Some networks such as delta or bridge configurations require other techniques that will be addressed in later chapters.

This page titled 4.3: Series-Parallel Impedance is shared under a CC BY-NC-SA 4.0 license and was authored, remixed, and/or curated by James M. Fiore via source content that was edited to the style and standards of the LibreTexts platform.

4.4: Series-Parallel Circuit Analysis

Given the infinite variety of series-parallel configurations, there are myriad ways of solving any given circuit for a particular current or voltage. Many solution paths exist. This is good, because while you might not see a particular path, there are others that will also provide correct results. The only issue is which path is most efficient or convenient for you. Suppose we are trying to find v_b in the circuit of Figure $4.4.1$. How might we approach this problem?

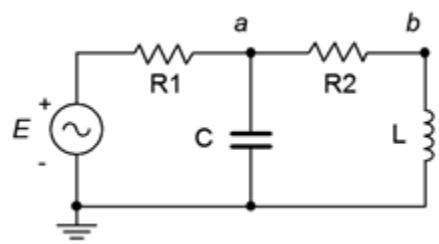

Figure $4.4.1$: A series-parallel RLC circuit.

One path would be to find the total impedance seen by the voltage source, Z_{total}. Dividing the source voltage by this impedance gives us the source current. We could then perform a current divider between the capacitor and inductor-resistor branches to find the inductor current. Once that current is found, it can be multiplied by the inductive reactance to find v_b. Alternately, having found the total impedance, we could compute the voltage divider between the three components on the right and R_1 to find v_a. Knowing v_a, a second voltage divider between X_L and R_2 gives us v_b. A third possibility would be to find the source current and use that to find v_a, perhaps by finding the drop across R_1 and subtracting that from the source, E. Once v_a is found, a voltage divider can be used to find v_b. Undoubtedly there are other solution paths that will work here. Some are more “computationally expensive” than others, but as long as you can identify one of them, the answers are within reach. Remember, the larger the circuit becomes, the greater the number of possible solution paths. Don't fall into the trap of relying on the same “trick” for every circuit, though. It is useful to solve these circuits using a variety of techniques as a means of cross-checking the results and sharpening your skill set.

Example $4.4.1$

Determine v_b for the circuit of Figure $4.4.2$ if the source frequency is 100 Hz.

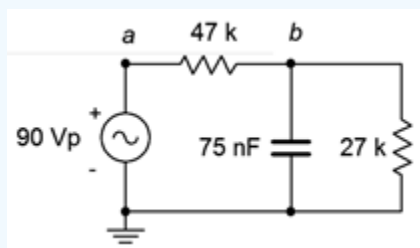

Figure $4.4.2$: Circuit for Example $4.4.1$.

The first thing to do is to find the capacitive reactance.

$$X_C = -j\frac{1}{2\pi fC}$$

$$X_C = -j\frac{1}{2\pi 100Hz75nF}$$

$$X_C \approx -j21.22k\Omega$$

This reactance is in parallel with the 27 kΩ resistor. Their combination is:

$$Z_{rc} = \frac{R \times jX_C}{R - jX_C}$$

$$Z_{rc} = \frac{27k\Omega \times (-j21.22k\Omega)}{27k\Omega - j21.22k\Omega}$$

$$Z_{rc} \approx 16.68E3\angle -51.8^\circ\Omega$$

This impedance forms a voltage divider with the 27 kΩ resistor to create v_b.

$$v_b = e_{source}\frac{Z_{rc}}{R + Z_{rc}}$$

$$v_b = 90\angle 0^\circ V\frac{16.68E3\angle -51.8\Omega}{47k\Omega + 16.68E3\angle -51.8^\circ\Omega}$$

$$v_b \approx 25.5\angle -38.9^\circ V$$

A time domain plot of v_b and the source voltage is shown in Figure $4.4.3$.

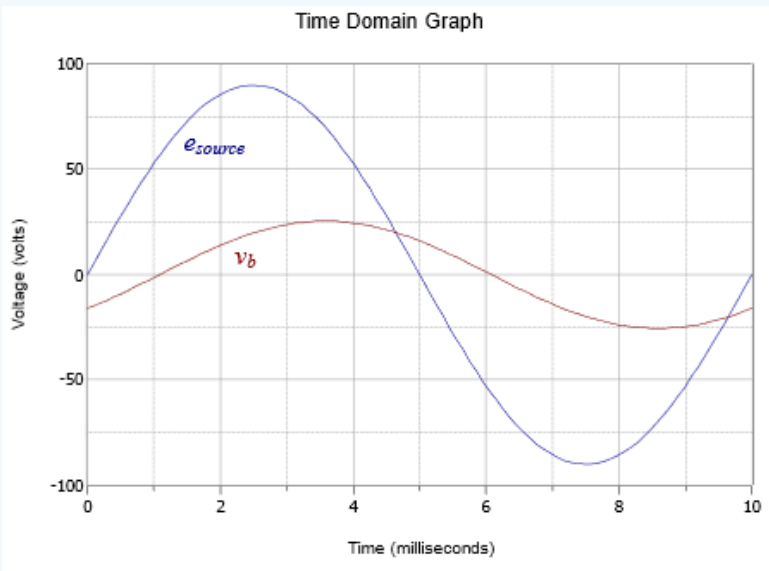

Figure $4.4.3$: Time domain plot of voltages for the circuit of Figure $4.4.2$.

Computer Simulation

To verify the results of the prior example, the circuit of Figure $4.4.2$ is entered into a simulator as shown in Figure $4.4.4$.

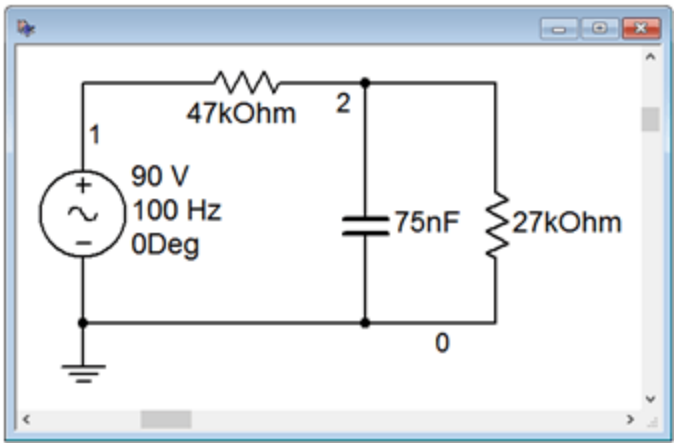

Figure 4.4.4: The circuit of Example 4.4.1 in the simulator.

A time domain or transient analysis is run, examining v_b and the source voltage. Node 2 corresponds to v_b. The results are shown in Figure 4.4.5.

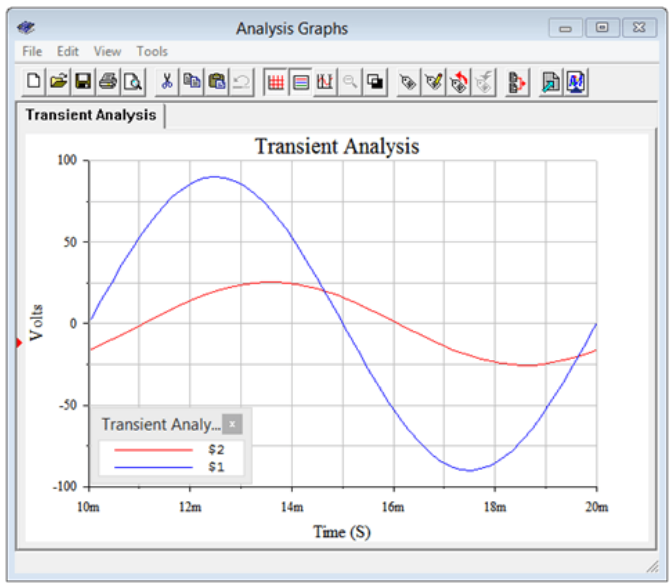

Figure 4.4.5: Transient analysis of the circuit of Example 4.4.1.

The plot is delayed one full cycle in order to get past the initial turn-on transient. The resulting amplitudes and phase shift line up perfectly with the plot of theoretical values in Figure 4.4.3.

Example 4.4.2

For the circuit of Figure 4.4.2, determine v_{ab}.

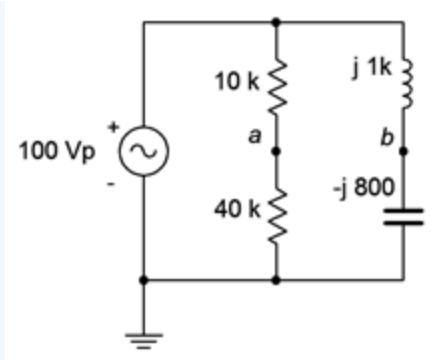

Figure 4.4.6: Circuit for Example 4.4.2.

This circuit can be analyzed as a pair of voltage dividers. By definition, $v_{ab} = v_a - v_b$. Numbering the resistors from top to bottom gives us:

$$v_a = e_{source}\frac{R_2}{R_1 + R_2}$$

$$v_a = 100\angle 0^\circ V\frac{40k\Omega}{10k\Omega + 10k\Omega}$$

$$v_a = 80\angle 0^\circ V$$

$$v_b = e_{source} - \frac{jX_C}{-jX_C + jX_L}$$

$$v_b = 100\angle 0^\circ V\frac{-j800\Omega}{-j800\Omega + j1k\Omega}$$

$$v_b = 400\angle 180^\circ V$$

This may also be written as $-400\angle 0^\circ$. Now we subtract the two voltages to find v_{ab}.

$$v_{ab} = v_a - v_b$$

$$v_{ab} = 80\angle 0^\circ V - 400\angle 180^\circ V$$

$$v_{ab} = 480\angle 0^\circ V$$

Note that v_{ab} is nearly five times larger than the source voltage. This is mostly due to the fact that v_b itself is four times the source magnitude. Due to the fact that X_L and X_C are relatively close in size, they largely cancel each other when placed in series. This produces a small net reactance which creates a large current. This considerable current then produces large voltages across these components. The closer the magnitudes of X_L and X_C, the higher the L and C component voltages. We will examine this effect in detail when we discuss resonance in Chapter 8.

To verify this result, we can calculate the voltage across the inductor and check to see if KVL is satisfied.

$$v_{inductor} = e_{source}\frac{jX_L}{-jX_C + jX_L}$$

$$v_{inductor} = 100\angle 0^\circ V\frac{j1k\Omega}{-j800\Omega + j1k\Omega}$$

$$v_{inductor} = 500\angle 0^\circ V$$

Adding the v_b of $-400\angle 0^\circ$ volts to $v_{inductor}$ does indeed yield the source voltage of $100\angle 0^\circ$ volts.

This can be seen graphically in Figure 4.4.7. First, note that the inductor voltage is in phase with the source voltage. This is because the LC branch appears to be net inductive, producing a current lagging the source voltage by 90 degrees. This same current flows through the inductor, meaning its voltage leads this current by 90 degrees, and thus the inductor voltage is in

phase with the source voltage. The lagging current also flows through the capacitor which produces a further 90 degree lag for the capacitor voltage (i.e., v_b) or 180 degrees total. Combining the large inductor voltage with a capacitor voltage that is nearly as large but effectively inverted yields the smaller source voltage.

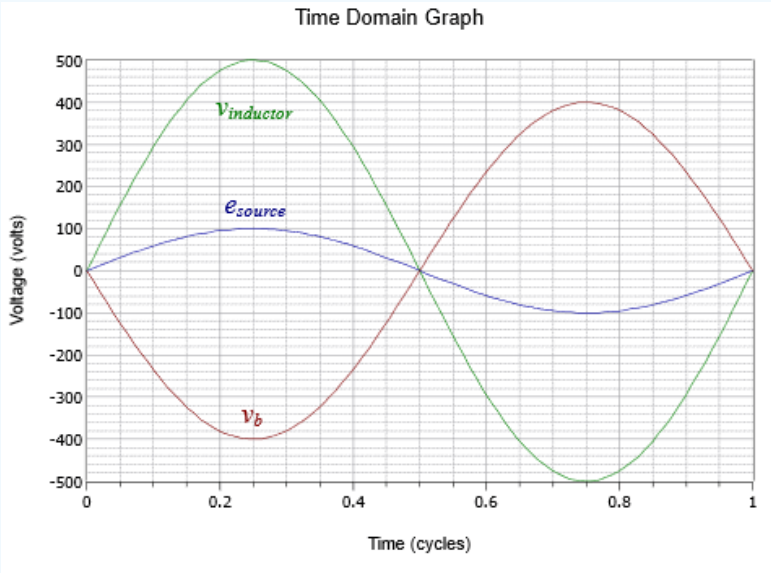

Figure $4.4.7$: Time domain plot of the circuit of Figure $4.4.6$.

Example $4.4.3$

In the circuit of Figure $4.4.8$, determine the current flowing down through the inductor. Use the source as the reference ($\angle 0^\circ$).

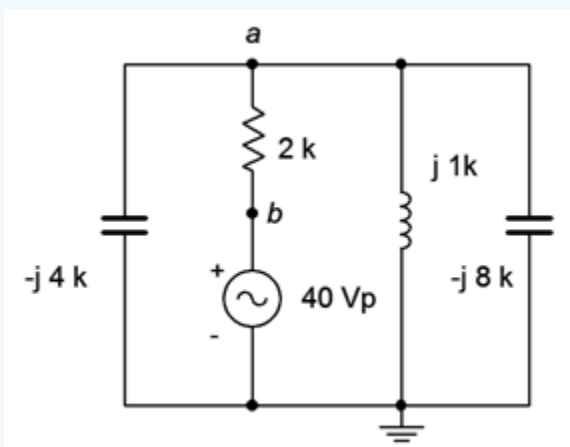

Figure $4.4.8$: Circuit for Example $4.4.3$.

One possible approach for this is to find the equivalent total impedance that the source drives in order to find the source current. A current divider can then be used between the inductor and the pair of capacitors (all three being in parallel). Another option would be to find the impedance of the three reactive components and then use the voltage divider rule to find v_a.

Once v_a is found, the inductor current can be found using Ohm's law. Each of these solution paths requires about as much work as the other so there is no clear preference. As we just used the voltage divider rule in the prior example, let's use the current divider rule this time.

We are going to need the combined capacitive reactance for the current divider, and we will also need it to find the total impedance, so let's do that first.

$$X_{Ctotal} = \frac{1}{\frac{1}{X_{C1}} + \frac{1}{X_{C2}}}$$

$$X_{Ctotal} = \frac{1}{\frac{1}{-j4k\Omega} + \frac{1}{-j8k\Omega}}$$

$$X_{Ctotal} = 2667\angle -90^\circ\Omega$$

This value is in parallel with the inductive reactance, and that combo is in series with the resistor, yielding the total impedance.

$$Z_{CL} = \frac{1}{\frac{1}{X_{Ctotal}} + \frac{1}{X_L}}$$

$$Z_{CL} = \frac{1}{\frac{1}{-j2667\Omega} + \frac{1}{j1k\Omega}}$$

$$Z_{CL} = 1600\angle 90^\circ\Omega$$

$$Z_{total} = R + Z_{CL}$$

$$Z_{total} = 2k\Omega + 1600\angle 90^\circ\Omega$$

$$Z_{total} = 2561\angle 38.7^\circ\Omega$$

The source current is found using Ohm's law.

$$i_{source} = \frac{e_{source}}{Z_{total}}$$

$$i_{source} = \frac{40\angle 0^\circ V}{2561\angle 38.7^\circ\Omega}$$

$$i_{source} = 15.6E-3\angle -38.7^\circ A$$

We now apply a current divider between X_{Ctotal} and the inductor.

$$i_{inductor} = i_{source}\frac{X_{Ctotal}}{X_{Ctotal} + X_L}$$

$$i_{inductor} = 15.6E-3\angle -38.7^\circ A\frac{-j2667\Omega}{-j2667\Omega + j1000\Omega}$$

$$i_{inductor} = 24.99E-3\angle -38.7^\circ A$$

Once again we see a branch current that is larger in magnitude than the source current. This current should produce an inductor voltage of

$$v_{inductor} = i_{inductor} \times X_L$$

$$v_{inductor} = 24.99E-3\angle -38.7^\circ A \times 1000\angle 90^\circ\Omega$$

$$v_{inductor} = 24.99\angle 51.3^\circ V$$

The voltage across the resistor is

$$v_R = i_{source} \times R$$

$$v_R = 15.6E-3\angle -38.7^\circ A \times 2000\angle 0^\circ\Omega$$

$$v_R = 31.2\angle -38.7^\circ V$$

KVL indicates that the sum of v_R and $v_{inductor}$ should equal the source of $40\angle 0^\circ$ volts, and it does (within rounding limits).

It is now time for some examples that use current sources.

Example $4.4.4$

Determine v_a, v_b and v_{ab} in the circuit of Figure $4.4.9$. Use the source as the reference angle of 0 degrees.

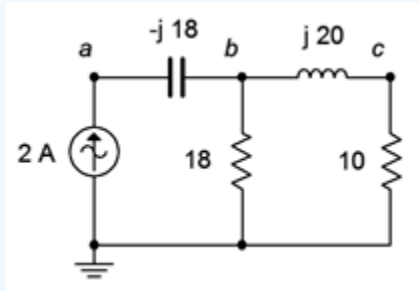

Figure $4.4.9$: Circuit for Example $4.4.4$.

To find v_b we can determine the equivalent impedance of the two resistors and the inductor and multiply it by the source current. The rightmost resistor and inductor are in series, yielding $10 + j20\Omega$. This is in parallel with the 18 Ω resistor.

$$Z_b = \frac{R_1 \times Z_{LR}}{R_1 + Z_{LR}}$$

$$Z_b = \frac{18\Omega \times (10 + j20\Omega)}{18\Omega + (10 + j20\Omega)}$$

$$Z_b = 11.7\angle 27.9^\circ\Omega$$

$$v_b = i_{source} \times Z_b$$

$$v_b = 2\angle 0^\circ A \times 11.7\angle 27.9^\circ\Omega$$

$$v_b = 23.4\angle 27.9^\circ V$$

The voltage across the capacitor is v_{ab}. We can find this through Ohm's law. Given the reference direction of the current source, the capacitor's voltage reference polarity is + to – from left to right.

$$v_{ab} = i_{source} \times X_C$$

$$v_{ab} = 2\angle 0^\circ A \times 18\angle -90^\circ\Omega$$

$$v_{ab} = 36\angle -90^\circ V$$

Finally, v_a is just v_{ab} plus v_b based on KVL.

$$v_a = v_{ab} + v_b$$

$$v_a = 36\angle -90^\circ V + 23.4\angle 27.9^\circ V$$

$$v_a = 32.48\angle -50.5^\circ V$$

A phasor diagram is shown in Figure $4.4.10$. Graphically, it can be seen that subtracting v_b from v_a yields v_{ab}, as expected. Remember, this is a seriesparallel circuit and therefore we do not see necessarily 0 degree or 90 degree angles between the various voltages as found in simple series-only circuits.

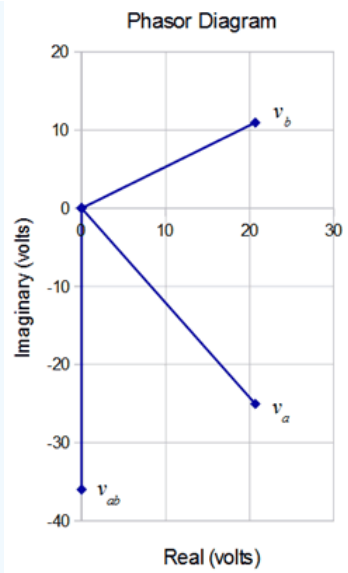

Figure $4.4.10$: Phasor voltage plot for the circuit of Figure $4.4.9$.

Example $4.4.5$

For the circuit of Figure $4.4.11$, determine v_b if the 1 amp source is used as the reference ($\angle 0^\circ$) and the 3 amp source has a 30° lagging phase angle.

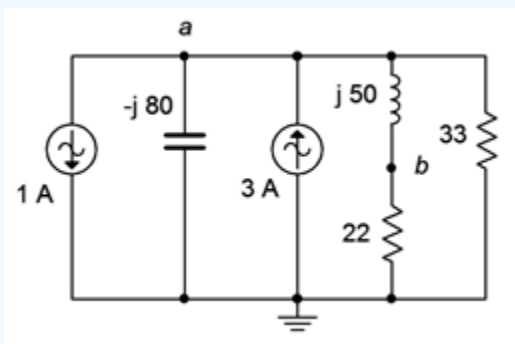

Figure $4.4.11$: Circuit for Example $4.4.5$.

The two current sources are in parallel and can be combined together. We must be a little careful regarding polarity, though. First of all, a "30° lagging phase angle" means that the second source is $3\angle -30^\circ$ amps. Along with this, its reference direction is opposite that of the first source. This means that the second source is negative or inverted by 180 degrees relative to source one. Thus, we can treat it as a downward source of $-3\angle -30^\circ$ amps, or $3\angle 150^\circ$ amps, whichever we prefer. Now that they're both configured as having a downward reference direction, we simply add them together.

$$i_{total} = i_1 + i_2$$

$$i_{total} = 1\angle 0^\circ A + 3\angle 150^\circ A$$

$$i_{total} = 2.192\angle 136.8^\circ A$$

Alternately, we could subtract $3\angle -30^\circ$ amps from the first source based on the reference directions, and note that the resulting direction of the combination is the same as that of the first source. Another option would be to reverse the reference direction of the first source. This would yield an upward direction with a value of $2.192\angle -43.2^\circ$ amps.

Having simplified the circuit to a single current source, it should be obvious that the inductor is in series with the 22 Ω resistor, and that combination is in parallel with both the capacitor and the 33 Ω resistor. Finding that parallel impedance would allow us to find v_a. Knowing v_a, a voltage divider between the series inductor/resistor combo will yield v_b. An important thing to note is that, given the downward reference direction of the equivalent current source, KCL indicates that the current direction through the other components must be upward, meaning that both v_a and v_b negative with respect to ground.

$$Z_{total} = \frac{1}{\frac{1}{X_C} + \frac{1}{R_1+X_L} + \frac{1}{R_2}}$$

$$Z_{total} = \frac{1}{\frac{1}{-j80\Omega} + \frac{1}{22\Omega+j50\Omega} + \frac{1}{33\Omega}}$$

$$Z_{total} = 26.38\angle 6.45^\circ\Omega$$

$$v_a = -i_{total} \times Z_{total}$$

$$v_a = -2.192\angle 136.8^\circ A \times 26.38\angle 6.45^\circ\Omega$$

$$v_a = 57.8\angle -36.8^\circ V$$

If we had reversed the reference direction of the current source, using $2.192\angle -43.2^\circ$ amps instead, the leading minus sign would not be required and we would arrive at the same result. Continuing,

$$v_b = v_a\left(\frac{R_1}{R_1 + X_L}\right)$$

$$v_b = 57.8\angle -36.8^\circ V\frac{22\Omega}{22\Omega + j50\Omega}$$

$$v_b = 23.29\angle -103^\circ V$$

Analysis Across the Frequency Domain

For the most part, we have examined the response of a circuit to a single frequency of excitation. In many electronic systems, such as in the field of communications, numerous frequencies are present simultaneously. Recall from Chapter 1 how complex wave shapes such as square waves, triangle waves or music signals can be built from a series of sine waves. In such systems, the reactive components behave as different values to the various frequencies simultaneously. For example, a capacitor may have a reactance of $-j400\Omega$ for a 100 Hz signal while at the same time offering a reactance of $-j40\Omega$ for a 1 kHz signal. It is this dynamic quality that allows us to design circuits to suppress or block certain frequency components, or to select specific frequencies from a large range or spectrum of frequency components.

We shall introduce this concept by first analyzing the circuit at a couple of specific frequencies and then employ a simulator to perform a frequency domain analysis (sometimes called an AC analysis) to plot complex response curves of voltage versus frequency. The concept of frequency domain response will be expanded in upcoming work, particularly in Chapter 10.

Example $4.4.6$

Consider the circuit shown in Figure $4.4.12$. Assume the source is a one volt peak sine wave. Determine voltages v_a, v_b and v_c if the source frequency is 10 kHz. Repeat this for an input frequency of 10 Hz.

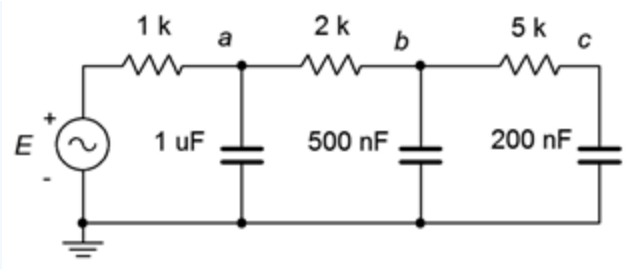

Figure 4.4.12: Circuit for Example 4.4.6.

If we treat E as the input and v_c as the final output, this circuit behaves as a series of cascading frequency-dependent voltage dividers. Generally speaking, at low frequencies the capacitive reactances will be larger than the associated resistors, and most of the input voltage will make it to node c. At high frequencies, the capacitive reactances will be small resulting in considerable voltage division at each node. Thus, only a small percentage of the input will make it to the final output. In other words, this circuit will filter out or remove high frequencies from the input with considerable effect, much more so than a single RC network.

First, we need to find the three capacitive reactances at 10 kHz. Starting at the left, we find

$$X_C = -j\frac{1}{2\pi fC}$$

$$X_C = -j\frac{1}{2\pi 10Hz1\mu F}$$

$$X_C \approx -j15.92\Omega$$

The other capacitive reactances work out to $-j31.83\Omega$ and $-j79.58\Omega$. The voltage v_a can be determined by a voltage divider between the 1 kΩ resistor and the series-parallel combination of the remaining five components. First, the 5 kΩ is in series with the 200 nF. That combination is in parallel with the 500 nF, which is in turn in series with the 2 kΩ resistor. Finally, that group of four is in parallel with the 1 μF capacitor.

The resistors and capacitors are numbered from left to right in the equations following. We will need each of the segment impedances for subsequent calculations.

$$Z_{right3} = \frac{1}{\frac{1}{X_{C2}} + \frac{1}{Z_{right2}}}$$

$$Z_{right3} = \frac{1}{\frac{1}{-j31.83\Omega} + \frac{1}{5000-j79.58\Omega}}$$

$$Z_{right3} = 31.83\angle -89.6^\circ\Omega$$

$$Z_{right4} = R_2 + Z_{right3}$$

$$Z_{right4} = 2000\Omega + 31.83\angle -89.6^\circ\Omega$$

$$Z_{right4} = 2000\angle -0.91^\circ\Omega$$

$$Z_{right5} = \frac{1}{\frac{1}{X_{C1}} + \frac{1}{Z_{right4}}}$$

$$Z_{right5} = \frac{1}{\frac{1}{-j15.92\Omega} + \frac{1}{2000\angle -.91^\circ\Omega}}$$

$$Z_{rightt} = 15.92\angle -89.5^\circ\Omega$$

At last we come to v_a:

$$v_a = e_{source}\frac{Z_{right5}}{R_1 + Z_{right5}}$$

$$v_a = 1\angle 0^\circ V\frac{15.92\angle -89.5^\circ\Omega}{1000\Omega + 15.92\angle -89.5^\circ\Omega}$$

$$v_a = 15.92\angle -88.6^\circ mV$$

To find v_b we perform a voltage divider between the 2 kΩ resistor and Z_{right3} using v_a as the input.

$$v_b = v_a\frac{Z_{right3}}{R_2 + Z_{right3}}$$

$$v_b = 15.92\angle -88.6^\circ mV\frac{31.83\angle -89.6^\circ\Omega}{2000\Omega + 31.83\angle -89.6^\circ\Omega}$$

$$v_b = 253.3\angle -177.3^\circ \mu V$$

Finally, to find v_c we perform a voltage divider between the 5 kΩ resistor and 200 nF capacitor using v_b as the input.

$$v_c = v_b\frac{X_{C3}}{R_3 + X_{C3}}$$

$$v_c = 253.3\angle -177.3^\circ \mu V\frac{-j79.58\Omega}{5000\Omega - j79.58\Omega}$$

$$v_c = 4.03\angle 93.6^\circ \mu V$$

Obviously, only a tiny percentage of the source signal is found at node c at this frequency.

Repeating this process at 10 Hz yields capacitive reactances of $-j15.92k\Omega$, $-j31.83k\Omega$ and $-j79.58k\Omega$. At this level, the amount of signal lost through each segment is inconsequential. For example, for the final segment the voltage divider ratio works out to:

$$\frac{v_c}{v_b} = \frac{X_{C3}}{R_3 + X_{C3}}$$

$$\frac{v_c}{v_b} = \frac{-j79.58k\Omega}{5000\Omega - j79.58k\Omega}$$

$$\frac{v_c}{v_b} = 0.998\angle -3.6^\circ$$

In other words, a mere 0.2% of the signal is lost and there is a modest -3.6° phase shift. The results at the other nodes are similar and left as an exercise. Thus we see that that the low frequencies are allowed through this network while the high frequencies are attenuated.

Computer Simulation

While the results of Example $4.4.6$ should be convincing as to the performance of the circuit, it should also be obvious that determining the voltages for any set of source frequencies would be a tedious exercise. Fortunately, there are other techniques that may be employed, such as those examined in Chapter 10. For now, though, we will turn our attention to a simulator. Most simulators offer an AC analysis or frequency domain analysis that will create two linked graphs; one for the voltage magnitude and another for the phase. We begin by entering the circuit of Figure $4.4.12$ into a simulator as shown in Figure $4.4.13$. Even though the schematic shows a 1 kHz source frequency, the AC analysis will allow us to specify the starting and ending frequencies for the plots. In this case, we'll use the 10 Hz and 10 kHz points specified in the example. The results are shown in Figure $4.4.14$.

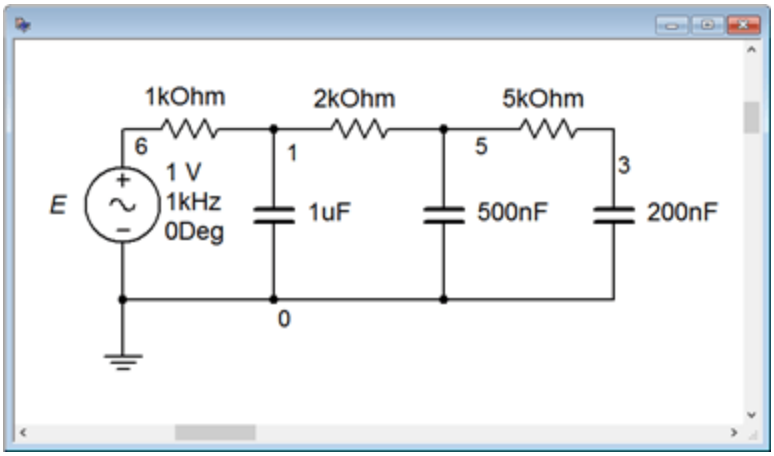

Figure 4.4.13: The circuit of Figure 4.4.12 in a simulator.

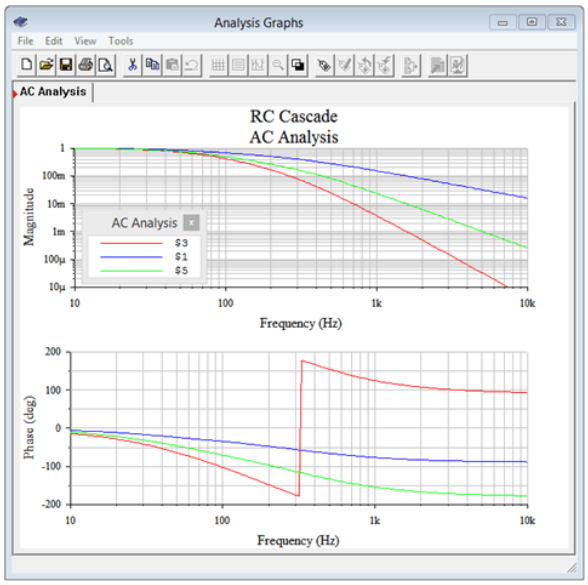

Figure 4.4.14: Frequency domain plots of voltage for the circuit of Figure 4.4.12.

The top graph plots the voltages at nodes a, b and c across frequency. It is obvious that, as the frequency increases, the voltage at each node decreases. The lower graph plots the phase shift at each of the nodes and it is apparent that the phase shift increases in the negative direction as frequency is increased. This is expected because, as the frequency increases, the capacitive reactance decreases, making each parallel combination appear more capacitive, and approaching -90 degrees each. A quick check of the voltage magnitudes and phases at 10 Hz indicates that very little signal is lost at the three node and that the phase shifts are close to zero. Further, at 10 kHz, there is considerable signal loss through each section, with each section producing nearly -90 degrees, just as calculated. Perhaps the only curious bit here is the abrupt change in phase shift shown at node c around 300 Hz (red trace). This is just an artifact of the plotting software. If an angle goes beyond ± 180 degrees, the value is rotated back the other way to keep the value within ± 180. For instance, -185 degrees is the same as $+175$ degrees.

Combining reactive elements can be a very effective means of selecting out a certain range of frequencies, as further illustrated in the following example.

Example 4.4.7

In Chapter 2 we introduced the concept of a loudspeaker crossover network. The idea was to “steer” low frequencies to the woofer (low frequency transducer) and high frequencies to the tweeter (high frequency transducer). An advancement on that simple system is to use a combination of capacitors and inductors in place of a simple RC or RL network. One possible configuration is illustrated in Figure 4.4.15. At high frequencies, the capacitive reactance will be small while the inductive reactance will be large. Thus, virtually all of the input signal will reach the loudspeaker. In contrast, at low frequencies the

capacitive reactances will be large and the inductive reactance small, resulting in hardly any of the input signal reaching the loudspeaker. Somewhere in the middle, a significant portion of the signal will make it through. This point is referred to as the crossover frequency. If the source voltage is 1 volt peak, determine the voltage developed across an 8 Ω loudspeaker at a frequency of 2.6 kHz for this circuit.

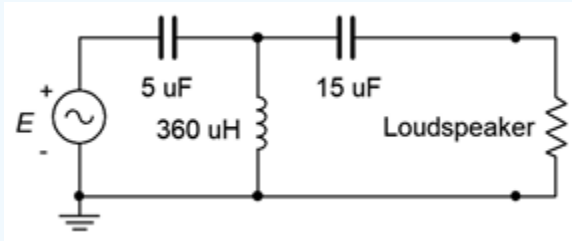

Figure $4.4.15$: Circuit for Example $4.4.7$.

First, we need to determine the reactances at the frequency of interest.

$$X_{C1} = -j\frac{1}{2\pi fC}$$

$$X_{C1} = -j\frac{1}{2\pi 2.6kHz5\mu F}$$

$$X_{C1} \approx -j12.24\Omega$$

The second capacitor is three times as large and therefore its reactance will be one-third as much, or $-j4.08\Omega$. For the inductor,

$$X_L = j2\pi fL$$

$$X_L = j2\pi 2.6kHz360\mu H$$

$$X_L \approx j5.88\Omega$$

Now that we have the reactances, the loudspeaker voltage can be computed via a pair of voltage dividers. In order find the loudspeaker voltage we'll first find the voltage developed across the inductor. To find that, we need to find the combined impedance of the three components on the right.

$$Z_{right3} = \frac{1}{\frac{1}{X_L} + \frac{1}{Z_{right2}}}$$

$$Z_{right3} = \frac{1}{\frac{1}{j5.88\Omega} + \frac{1}{8-j4.08\Omega}}$$

$$Z_{right3} = 6.44\angle 50.3^\circ\Omega$$

Now for the voltage divider to find $v_{inductor}$.

$$v_{inductor} = e_{source}\frac{Z_{right3}}{Z_{right3} + X_{C1}}$$

$$v_{inductor} = 1\angle 0^\circ V\frac{6.44\angle 50.3^\circ\Omega}{6.44\angle 50.3^\circ\Omega - j12.24\Omega}$$

$$v_{inductor} = 0.77\angle 110.8^\circ V$$

And now the final voltage divider to find $v_{loudspeaker}$.

$$v_{loudspeaker} = v_{inductor}\frac{Z_{loudspeaker}}{Z_{loudspeaker} + X_{C2}}$$

$$v_{loudspeaker} = 0.77\angle 110.8^{\circ}\mu V \frac{8\Omega}{8\Omega - j4.08\Omega}$$

$$v_{loudspeaker} = 0.686\angle 137.9^{\circ} V$$

At this particular frequency the loudspeaker sees about 2/3rds of the source voltage. For any higher frequency, the loudspeaker will see a larger share of the 1 volt source and for any lower frequency, the loudspeaker see less. At very low frequencies, only a few microvolts may get through.

Computer Simulation

In order to get a better sense of the loudspeaker voltage as a function of frequency, the circuit of Figure 4.4.15 is captured in a simulator as shown in Figure 4.4.16.

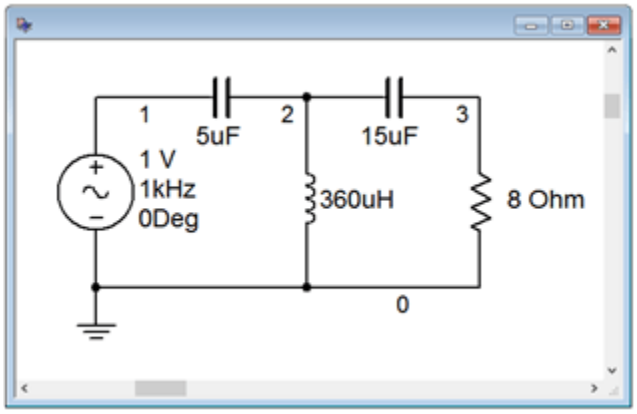

Figure 4.4.16: The circuit of Figure 4.4.15 in a simulator.

An AC analysis simulation is performed with the output shown in Figure 4.4.17.

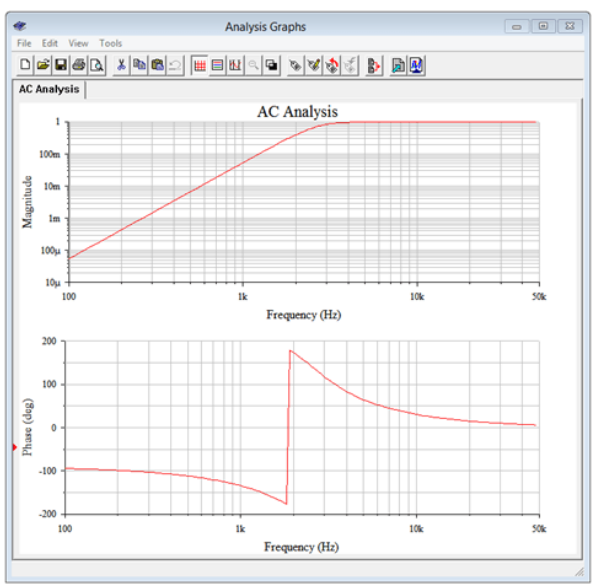

Figure 4.4.17: Frequency domain plot of the loudspeaker voltage for the circuit of Figure 4.4.15.

Both the magnitude and phase plots corroborate the calculated loudspeaker voltage at 2.6 kHz. The magnitude plot shows that the loudspeaker voltage is very close to the input level at frequencies above about 3 kHz. Below this frequency, the loudspeaker voltage rolls off considerably. Down at 100 Hz, well into the bass region, less than 100 microvolts, or under 0.01% of the input, reaches the loudspeaker. This circuit would make for an effective crossover network to a high frequency tweeter.

In closing, it is worth noting that a loudspeaker exhibits a complex impedance instead of simple resistive value, however, modeling it as an 8 Ω resistor is sufficient to illustrate the operation of this circuit. We will take a closer look at the impedance of loudspeakers and other devices in upcoming chapters.

This page titled 4.4: Series-Parallel Circuit Analysis is shared under a CC BY-NC-SA 4.0 license and was authored, remixed, and/or curated by James M. Fiore via source content that was edited to the style and standards of the LibreTexts platform.

4.5: Summary

In this chapter we have determined how to identify basic series-parallel RLC networks driven by a single effective voltage or current source. The key to this is to identify sub-circuits or subgroups of components that are comprised of either seriesonly or parallel-only configurations within themselves. These groupings can then be reduced to equivalent impedances using the series and parallel combination techniques examined in prior chapters. This process may be repeated until the entire circuit is simplified down to either a single series loop or parallel arrangement of components driven by a voltage or current source.

Once a circuit has been simplified, series and parallel analysis techniques, and laws such as Ohm's law, Kirchhoff's voltage and current laws, and the voltage and current divider rules, may be employed to determine various voltages and currents in the simplified equivalent. Given these results, the circuit may be expanded back into its original form in stages, reapplying these rules and techniques to determine voltages and currents within the sub-circuits. The process may be iterated until every current and voltage in the original circuit is discovered, if desired.

As the impedances of the individual sub-circuits can be anywhere between +90 and −90 degrees, phasor diagrams of the various component voltages or currents will no longer exhibit the strict right angles seen in series-only and parallel-only circuits. What is true is that this perpendicular relationship will still exist among the RLC components that comprise a specific series or parallel sub-circuit.

There are infinite varieties of series-parallel RLC configurations and consequently no single solution technique will work for all of them. In fact, the more complex the circuit, the more solution paths that exist for said circuit. Consequently it is prudent to plan out a solution path instead of just randomly “diving in” as this will lessen the ultimate effort.

Review Questions

1. In general, describe the process of reducing an AC series-parallel RLC network down to a single equivalent impedance.

2. Do Ohm's law, KVL and KCL still apply in AC series-parallel RLC networks? Why?

3. Is there a finite number of variations of AC series-parallel RLC networks? Why/why not?

4. Describe a general procedure to find the voltage between two arbitrary points in a series-parallel circuit.

5. In an AC series-parallel RLC circuit, will it always be the case that voltage across any resistor is in phase with that resistor's current? Why/why not?

6. In an AC series-parallel RLC circuit, will it always be the case that voltage across any inductor leads any resistor's voltage by 90 degrees? Why/why not?

This page titled 4.5: Summary is shared under a CC BY-NC-SA 4.0 license and was authored, remixed, and/or curated by James M. Fiore via source content that was edited to the style and standards of the LibreTexts platform.

4.6: Exercises

Analysis

Assume the source's angle is 0 degrees unless specified otherwise.

1. Determine the impedance of the circuit of Figure 4.6.1 at frequencies of 100 Hz, 10 kHz and 1 MHz.

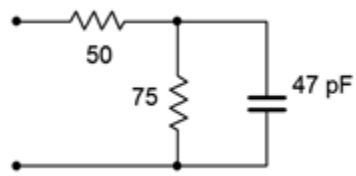

Figure 4.6.1

2. Determine the impedance of the circuit of Figure 4.6.2 at frequencies of 20 Hz, 1 kHz and 20 kHz.

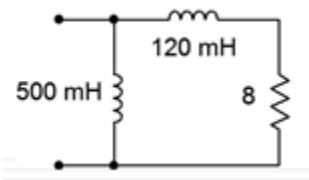

Figure 4.6.2

3. Determine the impedance of the circuit of Figure 4.6.3 at frequencies of 300 Hz, 30 kHz and 3 MHz.

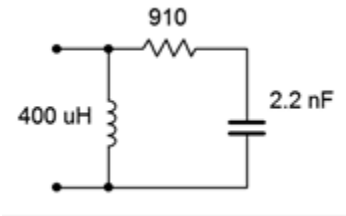

Figure 4.6.3

4. Determine the impedance of the circuit of Figure 4.6.4 at frequencies of 1 kHz, 20 kHz and 1 MHz.

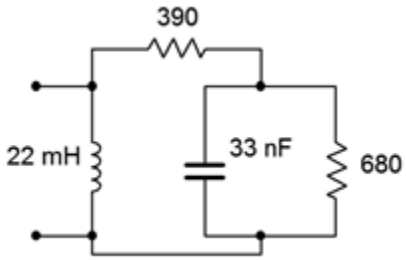

Figure 4.6.4

5. Determine the impedance of the circuit of Figure $4.6.5$.

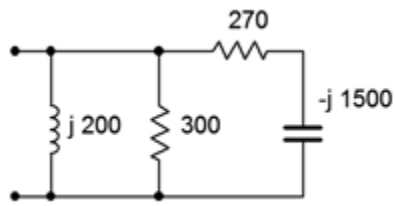

Figure $4.6.5$

6. Determine the impedance of the circuit of Figure $4.6.6$.

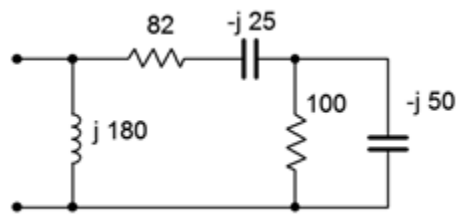

Figure $4.6.6$

7. For the circuit of Figure $4.6.7$, determine the source current and the current through each of the components.

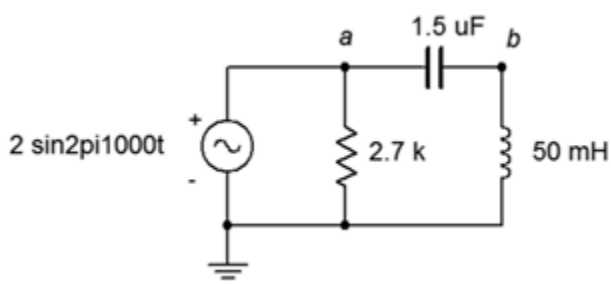

Figure $4.6.7$

8. For the circuit of Figure $4.6.7$, determine voltages v_{ab} and v_b.

9. For the circuit of Figure $4.6.8$, determine voltages across R, L and C if the source is 7 volts RMS.

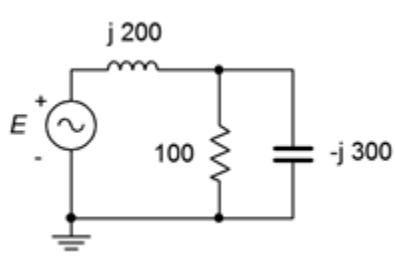

Figure $4.6.8$

10. For the circuit of Figure $4.6.8$, determine the source current and the current through each of the three components. Also, draw a phasor diagram of E, v_L and v_R.

11. For the circuit of Figure $4.6.9$, determine the source current and the current through each of the components.

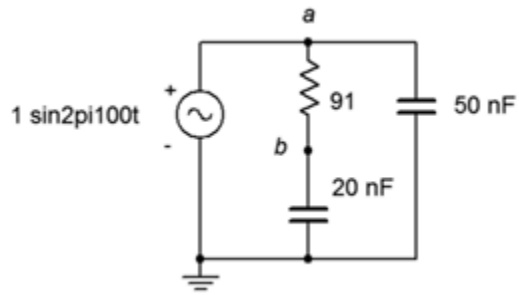

Figure $4.6.9$

12. For the circuit of Figure $4.6.9$, determine voltages v_{ab} and v_b. Also, draw a phasor diagram of E, v_{ab} and v_b.

13. For the circuit of Figure $4.6.10$, determine voltages v_{ab} and v_b if the source is 20 volts peak.

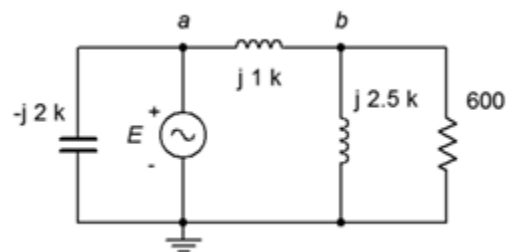

Figure $4.6.10$

14. For the circuit of Figure $4.6.10$, determine the source current and the current through each of the four components if the source is 20 volts peak.

15. For the circuit of Figure $4.6.11$, determine the source current and the current through each of the four components.

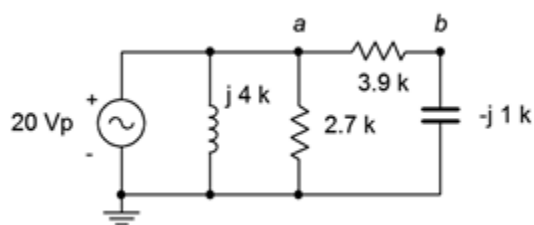

Figure $4.6.11$

16. For the circuit of Figure $4.6.11$, determine voltages v_{ab} and v_b.

17. For the circuit of Figure $4.6.12$, determine voltages v_{ab} and v_b if the source is 100 volts peak.

18. For the circuit of Figure $4.6.12$, determine the currents through the two resistors.

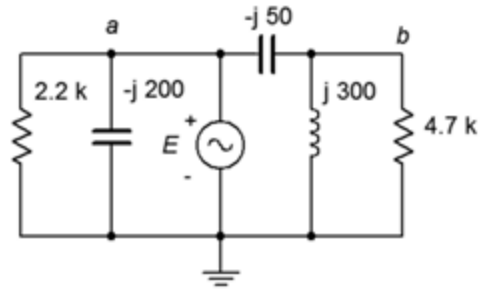

Figure $4.6.12$

19. For the circuit of Figure $4.6.13$, determine the currents each of the three components.

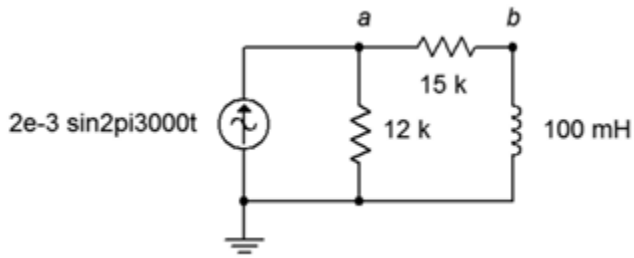

Figure $4.6.13$

20. For the circuit of Figure $4.6.13$, determine voltages v_a and v_b.

21. For the circuit of Figure $4.6.14$, determine voltages v_a and v_b.

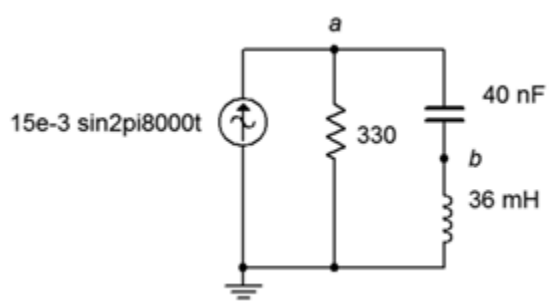

Figure $4.6.14$

22. For the circuit of Figure $4.6.14$, determine the middle and right branch currents and draw a phasor diagram of three circuit currents.

23. For the circuit of Figure $4.6.15$, determine voltages v_a and v_b.

24. For the circuit of Figure $4.6.15$, determine the currents through the two resistors.

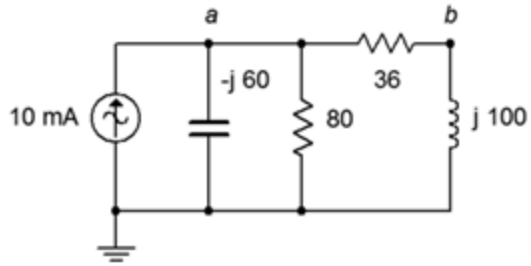

Figure $4.6.15$

25. For the circuit of Figure $4.6.16$, determine voltages v_a and v_b. $i_{source} = 25$ mA.

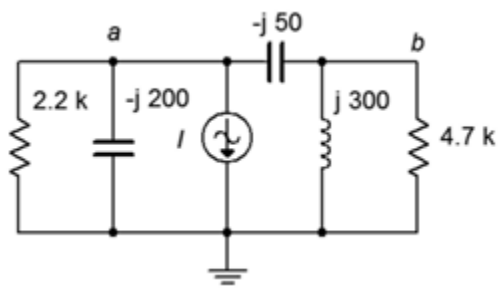

Figure $4.6.16$

26. For the circuit of Figure $4.6.16$, determine the currents through the two capacitors.

27. For the circuit of Figure $4.6.17$, determine the current through the capacitor. $i_1 = 10E - 3\angle 0^\circ A$ and $i_2 = 3E - 3\angle 90^\circ A$.

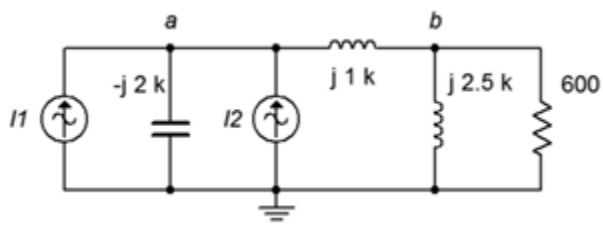

Figure $4.6.17$

28. For the circuit of Figure $4.6.17$, determine voltages v_a and v_b. $I_1 = 10E - 3\angle 0^\circ A$ and $I_2 = 3E - 3\angle 90^\circ A$.

29. For the circuit of Figure $4.6.18$, determine voltages v_a and v_b. $i_1 = 2\angle 45^\circ A$ and $i_2 = 0.5\angle 0^\circ A$.

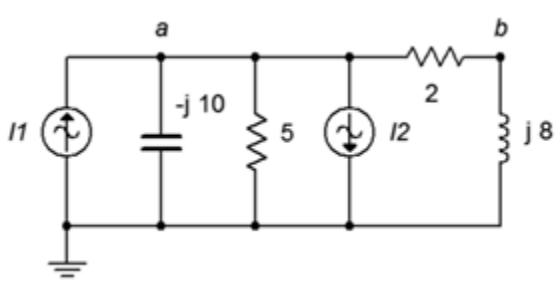

Figure $4.6.18$

30. For the circuit of Figure $4.6.18$, determine the currents through the two resistors. $i_1 = 2\angle 45^\circ A$ and $i_2 = 0.5\angle 0^\circ A$.

31. For the bridge circuit of Figure $4.6.19$, determine v_{ab}. The source is 50 volts peak.

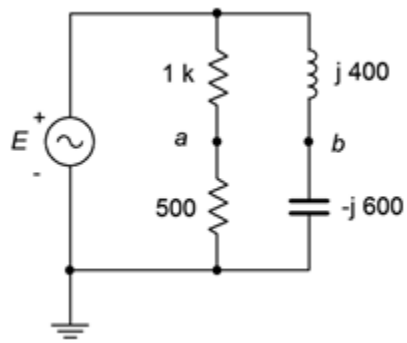

Figure $4.6.19$

32. For the bridge circuit of Figure $4.6.20$, determine v_{ab}. The source is 6 amps peak.

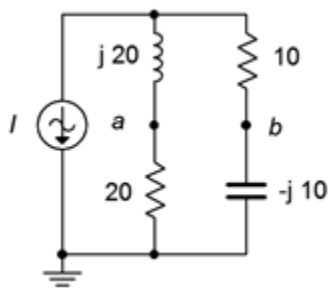

Figure $4.6.20$

Design

33. Determine a new value for the capacitor in Figure $4.6.7$ such that v_b is 1.5 volts.

34. Determine the required inductive reactance in Figure $4.6.8$ to shift the capacitor voltage to half of the source voltage.

35. Determine a new value for the 20 nF capacitor in Figure $4.6.9$ such that the resistor current is 2 mA.

36. In the circuit of Figure $4.6.21$, determine a value for L such that the magnitude of v_b equals $v_a/2$ if the source frequency is 10 kHz, R = 2.7 kΩ and C = 10 nF.

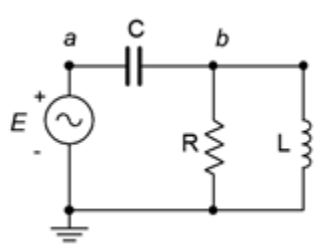

Figure $4.6.21$

37. Given the circuit of Figure $4.6.21$, determine a value for C such that the source current is in phase with the source voltage. The source frequency is 1 kHz, R = 68 Ω and L = 22 mH.

38. Given the circuit of Figure $4.6.22$, determine a value for L such that v_b is 1 volt. The source is a 6 volt peak sine at 50 kHz, R_1 = 510 Ω and R_2 = 220 Ω.

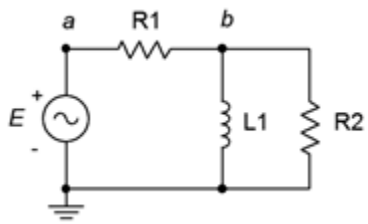

Figure $4.6.22$

39. Given the circuit of Figure $4.6.19$, determine a new value for the inductor such that the magnitude of v_b equals the magnitude of v_a. Assume that the source frequency is 20 kHz.

Challenge

40. Consider the circuit drawn in Figure $4.6.23$. Using only the available components of 1 kΩ, 2.2 kΩ, 1 mH, 5 mH, 10 nF, 75 nF and 560 nF, is it possible to configure a circuit such that v_a is half the magnitude of v_b for a source frequency of 1 kHz? If so, indicate which values could be used for the four components. If not, explain your reasoning.

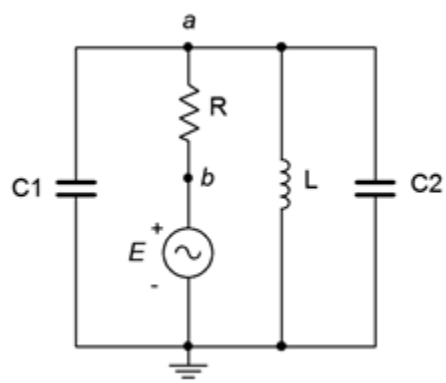

Figure $4.6.23$

41. Given the circuit of Figure $4.6.9$, determine the frequency at which v_b is half of the source voltage.

42. For the circuit of Figure $4.6.24$, determine voltages v_a, v_b, and v_c. $i_1 = 5\angle 0^\circ A$ and $i_2 = 3\angle 90^\circ A$.

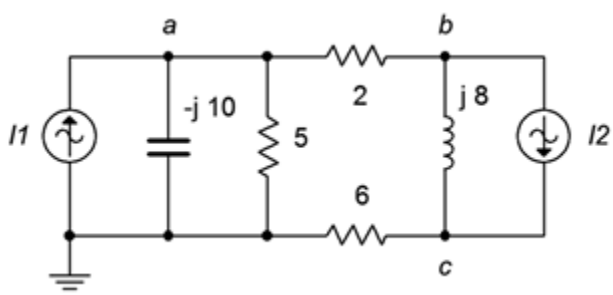

Figure $4.6.24$

43. Given the circuit of Figure $4.6.19$, is it possible to change the values of the two resistors such that the phase angle of v_a is the same as that of v_b? If so, what are the new values, and if not, explain why it is not possible.

Simulation

44. Perform a transient analysis to verify the node voltages computed for problem 8.

45. Perform a transient analysis to verify the node voltages computed for problem 12.

46. Perform a transient analysis to verify the node voltages computed for problem 20.

47. Perform a transient analysis to verify the node voltages computed for problem 21.

48. Consider the circuit of problem 17. Assuming the source frequency is 10 kHz, determine values for the capacitors and inductors. Then, use a transient analysis to verify the results of problem 17.

49. Perform a transient analysis on the result of problem 33 to verify the accuracy of the design.

50. Perform a transient analysis on the result of problem 34 to verify the accuracy of the design.

51. Use an AC frequency response simulation to verify the results of problem 41.

52. The concept of a loudspeaker crossover network was presented originally in Chapter 2, Series RLC Circuits. In this chapter, we noted that by adding more components, it is possible to increase the rate of attenuation. In doing so the undesired signals are further reduced in amplitude. The circuits of Figure $4.6.25$ and $4.6.26$ (following page) show improved crossovers for a woofer and tweeter, respectively. Assuming standard 8 Ω loudspeakers, use an AC frequency domain simulation to determine the crossover frequency of each network. Also, compare the curves at node a to those at node b. Finally, compare the attenuation slopes to those generated by the simpler crossover network presented at the end of Chapter 2. Component values for the woofer: $L1$ = 760 μH, (L2\) = 250 μH, C = 10.6 μF. Component values for the tweeter: $C1$ = 5.3 μF, $C2$ = 16 μF, L = 380 μH.

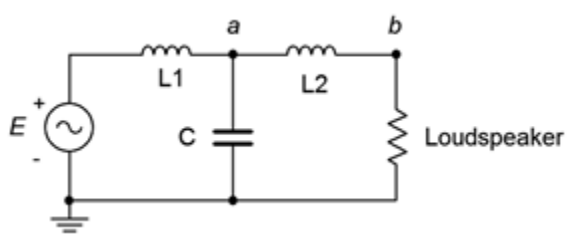

Figure $4.6.25$

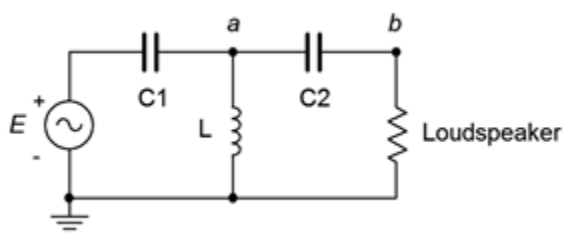

Figure $4.6.26$

This page titled 4.6: Exercises is shared under a CC BY-NC-SA 4.0 license and was authored, remixed, and/or curated by James M. Fiore via source content that was edited to the style and standards of the LibreTexts platform.

5: ANALYSIS THEOREMS AND TECHNIQUES

Learning Objectives

After completing this chapter, you should be able to:

- Find the voltage source equivalent of a current source and vice versa.
- Compute voltages and currents in multi-source RLC networks using superposition.
- Simplify RLC networks using Thévenin's and Norton's theorems.
- Determine conditions for maximum power transfer and compute the maximum power.
- Utilize delta-Y and Y-delta conversions for circuit simplification.

5.1: Introduction

5.2: Source Conversions

5.3: Superposition Theorem

5.4: Thévenin's and Norton's Theorems

5.5: Maximum Power Transfer Theorem

5.6: Delta-Y (Pi-T) Conversions

5.7: Summary

5.8: Exercises

This page titled 5: Analysis Theorems and Techniques is shared under a CC BY-NC-SA 4.0 license and was authored, remixed, and/or curated by James M. Fiore via source content that was edited to the style and standards of the LibreTexts platform.

5.1: Introduction

In this chapter we shall examine a number of theorems and techniques to help us analyze complex circuits and address specialized applications. We will begin by examining the concept of source impedance in order to make more accurate models of our idealized constant voltage and current sources. This will be a step beyond using a simple resistance as found in the DC case. From there we will investigate how to convert from one type of source to another, such as creating a voltage source that is the functional equivalent of a current source. A functional equivalent is a source that can be swapped out for another while leaving all of the other circuit currents and voltages intact. In other words, all of the circuit's component voltage drops and branch currents will be identical to those found in the original configuration. This technique is useful in a number of ways, particularly in that it can help reduce more complex circuits to simplify analysis.

The concept of equivalence can be extended beyond just a single source to an entire network. For this we will examine Thévenin's and Norton's theorems. Using these theorems, entire circuits utilizing dozens of components can be modeled as a single source with an associated complex impedance. When coupled with the maximum power transfer theorem, these tools will allow us to determine component values that produce the maximum amount of load power.

We will also address a method of analyzing circuits that contain multiple current and/or voltage sources that are connected in a non-trivial fashion (i.e., not just series voltage sources or parallel current sources). This is called the superposition theorem and it can be applied to any circuit or parameter that meets certain requirements, including circuits that have a mix of current sources and voltage sources. Superposition can also be used to determine voltages and currents when sources use different frequencies. In fact, one of way of imagining a complex wave-shape is to treat it as a series of connected sources, each with a unique frequency, phase and amplitude. Superposition we give us a means to handle this new situation.

Finally, we will examine how to find equivalent circuits for certain component arrangements that use three connecting points, in other words, RLC combinations shaped like a triangle or like the letter Y. These are known as delta and Y configurations. These configurations are difficult to address with basic series-parallel simplification techniques. Converting from one configuration to the other will help solve that issue.

This page titled 5.1: Introduction is shared under a CC BY-NC-SA 4.0 license and was authored, remixed, and/or curated by James M. Fiore via source content that was edited to the style and standards of the LibreTexts platform.

5.2: Source Conversions

In DC analysis, we noted that real world sources have practical limits: voltage sources cannot produce infinite current and current sources cannot produce infinite voltage. A simple way of creating a more accurate model for independent sources is to include an internal resistance. For DC voltage sources, a resistance is added in series with the source, and for DC current sources a resistance is added in parallel with the source. While this works well enough for typical DC sources, the AC situation is a little more complicated.

Models for AC Sources

Just as we added a simple resistance to the DC sources to make improved models, we can add a complex impedance to AC sources to do likewise. Once again, it is possible to make even more involved models that will be more accurate, but for most work, this addition will suffice. Generally, there are wider variations in values for the AC case than the DC case.

We can think of AC sources as belonging in one of two broad categories. First, there are power generators, that is, systems designed to generate and deliver power for other electrical devices. This would include the AC mains system in a residence or a portable power generator. At the other end of the spectrum are signal sources such as transducers and sensors. These devices are generally low power and are not designed to produce particularly high currents, quite the opposite of generators.

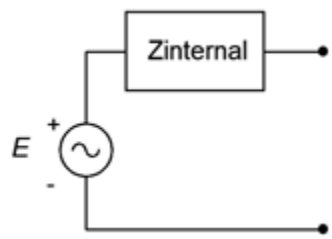

Figure 5.2.1: Practical AC voltage source model.

The model for an AC voltage source adds an impedance in series, as shown in Figure 5.2.1. This impedance sets an upper limit on the source's current output. Even if the output terminals are shorted, the maximum current will be dictated via Ohm's law to be the source voltage divided by the internal impedance, or $E/Z_{internal}$. Obviously, this internal impedance will create some voltage divider effect with the attached load. To minimize this effect, the impedance should be as small as practicably possible. Thus,

$$\text{The ideal internal impedance of a voltage source is zero ohms (a short).}$$

It is not always possible to get close to this ideal. In fact, in some situations the AC source is far removed from the ideal.

Consider the signal source shown in Figure 5.2.2. This is a pickup for an electric bass guitar. This device is used to translate the motions of guitar strings into a voltage that can be fed to an amplifier. It consists of a few thousand turns of very fine magnet wire wrapped around a magnet.

Figure 5.2.2: An electric bass guitar pickup (cover removed).

When the metal guitar strings vibrate, they alter the surrounding magnetic field. As the magnetic field changes, it induces a current, and hence a voltage, in the coil. The resulting signal is an electrical analog of the string vibrations. It is, quite literally, an AC signal source. But what of its internal impedance? The coil is made of wire between AWG 40 and 45, and may be in excess of 1000 feet (300 meters) in length. Consulting an AWG table[1], we find that this will yield 1000 or more ohms of resistance. Of

course, a few thousand turns of wire will also create a hefty inductance and pickups such as this may exhibit an inductance of a few henries. Putting these pieces together, the equivalent internal impedance might look something like that shown in Figure 5.3.

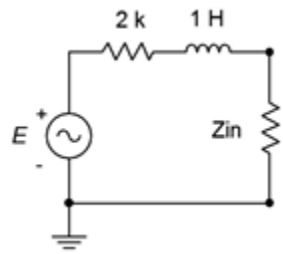

Figure $5.2.3$: Example of internal impedance of guitar pickup.

Clearly, values like these are a far cry from the fractional ohm values found in power generation sources, and they present unique challenges. In the circuit of Figure $5.2.3$, the component labeled Z_{in} represents the input impedance of the associated amplifier. Typically, it would be highly resistive but the magnitude can vary quite a bit depending on the application. A guitar or bass amplifier may exhibit 1 MΩ or more, while an auxiliary input on a home stereo might be 10 kΩ. What happens if you plug a guitar into your hi-fi? Obviously, this system creates a voltage divider between the internal impedance of the pickup and the input impedance of the amplifier, but more importantly, the divider is a function of frequency. At low frequencies like 100 Hz, the inductive reactance is small, around $j600\Omega$, and the signal loss to a 10 kΩ input is not that great. On the other hand, at a high frequency such as 10 kHz, the inductive reactance will be over $j60k\Omega$ resulting in considerable signal loss. Thus, the high frequencies are reduced relative to the low frequencies. The sonic effect is akin to turning down the treble control — everything will seem muffled. If the input impedance is increased considerably, say by a factor of 100, then the voltage divider effect at all audible frequencies will be negligible and the the instrument will sound true to form. Finally, although this example shows a substantial inductance, it is possible for AC sources to have an associated capacitance, or even have negligible reactance (i.e., be purely resistive).

For a current source, the improved model adds an impedance in parallel, as shown in Figure $5.2.4$. This impedance sets an upper limit on the source's voltage output. If the output terminals are opened, the maximum voltage will no longer produce a huge voltage. Instead, it is dictated by Ohm's law to be the source current times the internal impedance, or $I \cdot Z_{internal}$. This internal impedance will create some current divider effect with the attached load. To minimize this effect, the internal impedance should be as large as practicably possible. Thus,

$$\text{The ideal internal impedance of a current source is infinite ohms.}$$

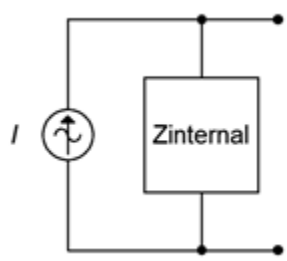

Figure $5.2.4$: Practical AC current source model.

From here on, whenever we deal with practical voltage and current sources, we understand that these sources have some associated internal resistance, even if they're not shown explicitly in a schematic diagram. Further, whenever we talk about ideal sources, we simply use a short for the internal impedance of a voltage source and an open for the internal impedance of a current source.

Source Equivalences

For any voltage source consisting of an ideal voltage source with a series internal impedance, an equivalent current source may be created. Similarly, for any current source consisting of an ideal current source with a parallel internal impedance, an equivalent voltage source may be created. By “equivalent”, we mean that both circuits will produce the same voltage and current to identical loads. Consider the simple voltage source on the left side of Figure $5.2.5$. Its equivalent current source is shown on the right.

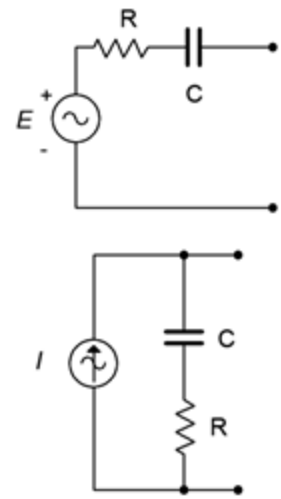

Figure $5.2.5$: A simple AC voltage source (left) and corresponding current source (right).

For reasons that will become apparent under the section on Thévenin's theorem following, the internal impedances of these two circuits must be identical if they are to behave identically. Knowing that, it is a straightforward process to find the required values of the other source. The current/voltage characteristic is linear for these circuits, and a straight plot line can be defined by just two points. The two obvious points to use are the opened and shorted load cases. In other words, if the circuit is equivalent for these two situations, it must work for any load. The shorted load case produces a large load current with zero load voltage, and the opened load case produces a large load voltage with zero load current. It would not make sense if the equivalent source could produce a greater current or voltage under the same extreme conditions as the original.

For example, given a voltage source, the current that can be developed when the load is shorted is $E/Z_{internal}$. Under that same load condition, all of the current from the current source version must be flowing through the load (otherwise the load isn't shorted). Therefore, the value of the equivalent current source must be the current of $E/Z_{internal}$. Note that the resulting source normally will not have the same phase angle as the original source due to the phase angle of the associated impedance.

To continue, if we look at the open load case for the voltage source, the load current would be zero and the load voltage would be the entire source voltage of E. For the current source, the load would also see no current and its voltage would be the voltage appearing across its internal resistance which is $Z_{internal}$ times the current $E/Z_{internal}$, or just E. Thus, the two behave identically at the load limits.

Similarly, if we start with a current source, an open load produces a load voltage of $I \cdot Z_{internal}$. Therefore, the equivalent voltage source must have a value of $I \cdot Z_{internal}$. For the current source, a shorted load would produce a load current equal to the source value, or I. The voltage source version would produce a current of $E/Z_{internal}$, where the value of E was just found to be equal to $I \cdot Z_{internal}$, and thus the load current would be $I \cdot Z_{internal}/Z_{internal}$, or just I. Once again, the two versions behave identically at the load limits.

Changing the source frequency results in different values for both the reactance and the converted source voltage or current, thus the equivalent is valid only for the frequency in question.

To summarize the process of source conversion:

- The internal impedance will be the same for both versions.
- If converting from a voltage source to a current source, the value of the current source will be the short circuit current available from the voltage source (i.e., shorted load case), and is equal to $E/Z_{internal}$.
- If converting from a current source to a voltage source, the value of the voltage source will be the open circuit voltage available from the current source (i.e., opened load case), and is equal to $I \cdot Z_{internal}$.
- The equivalent is unique to the frequency of the source.

If a multi-source is being converted (i.e., voltage sources in series or current sources in parallel), first combine the sources to arrive at the simplest source and then do the conversion. Do not convert the sources first and then try to combine them as you will wind up with series-parallel configurations rather than simple sources.

Judicious use of source conversions can sometimes simplify multi-source circuits by allowing converted sources to be combined, resulting in a single source.

Example $5.2.1$

Convert the source of Figure $5.2.6$ into its current source equivalent. $E = 2\angle 0^\circ$ volts RMS.

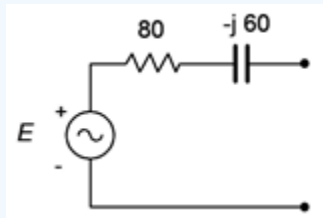

Figure $5.2.6$: Circuit for Example $5.2.1$.

First, the existing impedance of $80 - j60\Omega$ does not change, it is simply moved to a parallel position. To find the value of the current source, compute the short circuit current the existing source is capable of producing.

$$I = \frac{E}{Z}$$

$$I = \frac{2\angle 0^\circ V}{80 - j60\Omega}$$

$$I = 0.02\angle 36.9^\circ A$$

The result is shown in Figure $5.2.7$. The current source is 20 mA RMS with a leading phase angle of 36.9 degrees.

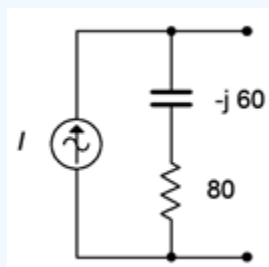

Figure $5.2.7$: Current source equivalent of the source of Figure $5.2.6$.

Example $5.2.2$

Convert the source of Figure $5.2.8$ into its voltage source equivalent. $I = 0.1\angle 0^\circ$amps peak.

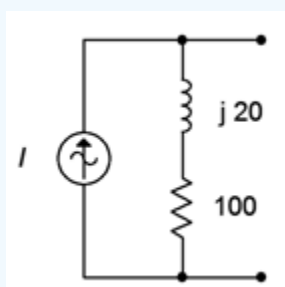

Figure $5.2.8$: Circuit for Example $5.2.2$.

Again, the internal impedance of $100 + j20\Omega$ does not change and we simply place it in series. To find the value of the voltage source, find the open circuit voltage the existing source is capable of producing.

$$E = I \times Z$$

$$E = 0.1\angle 0^{\circ} A \times (100 + j20\Omega)$$

$$E \approx 10.2\angle 11.3^{\circ} V$$

The equivalent is shown in Figure $5.2.9$. The voltage source E is 10.2 volts peak with a leading phase angle of 11.3 degrees.

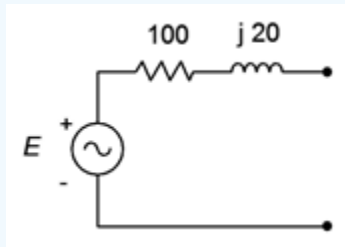

Figure $5.2.9$: Voltage source equivalent of the source of Figure $5.2.8$.

Computer Simulation

To verify this process, the circuits of Figures $5.2.8$ and $5.2.9$ are entered into a simulator. The original circuit simply specified an inductive reactance so a convenient frequency of 1 kHz was used and then an appropriate inductor was created that would yield the desired reactance of $j20\Omega$. This turned out to 3.183 mH. Further, a random load resistor (200 Ω) was picked and applied to both circuits. The result is shown in Figure 5.10.

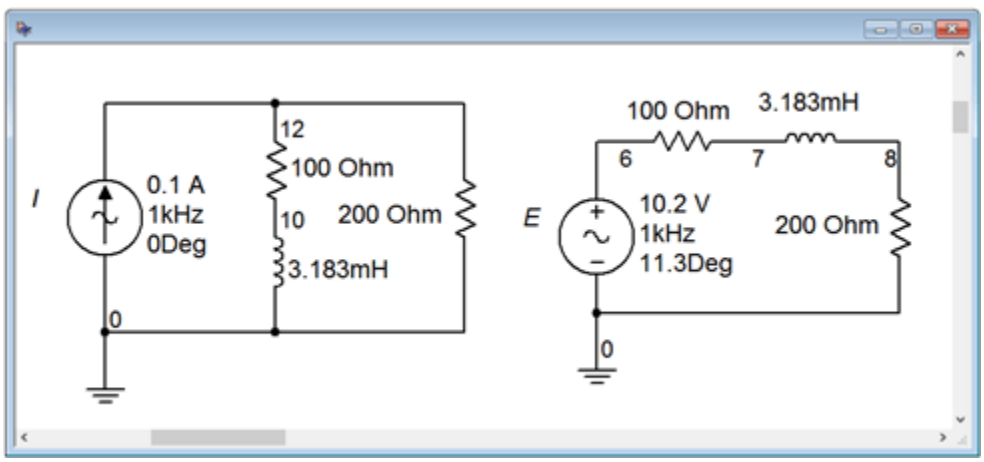

Figure $5.2.10$: The circuits of Figures $5.2.8$ and $5.2.9$ in a simulator.

If these two circuits are equivalent, then the voltages seen across the 200 Ω load resistors should be identical. These voltages correspond to node voltages 12 and 8. A quick voltage divider computation shows that the load voltage should be approximately $6.785\angle 7.5^{\circ}$ volts peak.

A transient analysis is performed, plotting the load voltages. The results are shown in Figure $5.2.11$. The plot itself is delayed by one millisecond in order to get past the initial turn-on transient. Further, the current source circuit is shifted by approximately 2 microseconds. Without this slight shift in time, the two voltages perfectly overlap so that it appears there is only one trace. By looking carefully at the graph it can be seen that there are indeed two traces. The amplitudes of these waveforms match each other perfectly and also match the computed result.

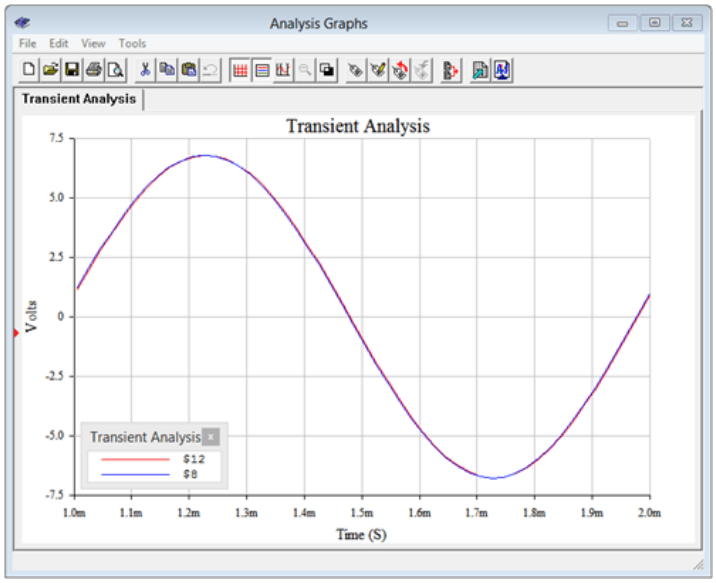

Figure $5.2.11$: Simulation results for the source conversion.

Now let's turn our attention to using source conversion to simplify and solve a multisource circuit.

Example $5.2.3$

For the circuit of Figure $5.2.12$, determine v_b. $I = 2E - 3\angle 90^\circ$ amps peak and $E = 10\angle 0^\circ$ volts peak.

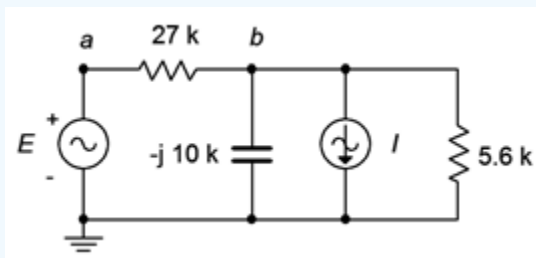

Figure $5.2.12$: Circuit for Example $5.2.3$.

One method of solution is to transform the voltage source into a current source. By doing so, the entire circuit is reduced to a parallel network. The two current sources can then be summed and the remaining three components can be combined into one equivalent parallel impedance. At that point Ohm's law can be used to find v_b.

The value of the current source is:

$$I_c = \frac{E}{Z}$$

$$I_c = \frac{10\angle 0^\circ V}{27k\Omega}$$

$$I_c = 0.3704E - 3\angle 0^\circ A$$

The converted circuit is shown in Figure $5.2.13$ (in blue).

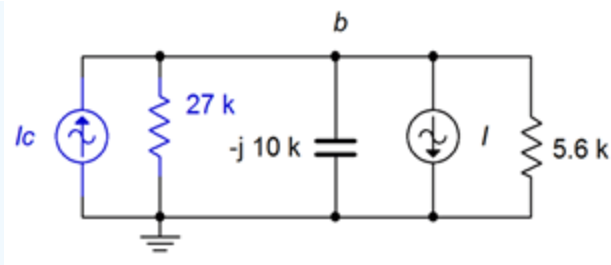

Figure 5.2.13: Circuit of Figure 5.2.12 with converted source.

Combining the two current sources and using an upward reference direction yields:

$$I_{total} = I_c - I$$

$$I_{total} = 0.3704E-3\angle 0^\circ A - 2E-3\angle 90^\circ A$$

$$I_{total} = 2.034E-3\angle -79.5^\circ A$$

The combined impedance is:

$$Z_{total} = \frac{1}{\frac{1}{X_C} + \frac{1}{R_1} + \frac{1}{R_2}}$$

$$Z_{total} = \frac{1}{\frac{1}{-j10k\Omega} + \frac{1}{27k\Omega} + \frac{1}{5.6k\Omega}}$$

$$Z_{total} = 4208\angle -24.9^\circ \Omega$$

And finally we compute v_b:

$$v_b = I_{total} \times Z_{total}$$

$$v_b = 2.034E-3\angle -79.5^\circ A \times 4208\angle -24.9^\circ \Omega$$

$$v_b = 8.56\angle -104.4^\circ V$$

We can perform a KCL crosscheck at node b to verify the results in the original circuit. Given the reference directions, all currents are flowing out of the node except for the current supplied by the voltage source.

$$i_{Esource} = \frac{E - v_b}{R_1}$$

$$i_{Esource} = \frac{10\angle 0^\circ V - 8.56\angle -104.4^\circ V}{27k\Omega}$$

$$i_{Esource} = 0.544E-3\angle 34.4^\circ A$$

The remaining three currents should add up to this value.

$$i_{capacitor} = \frac{v_b}{X_C}$$

$$i_{capacitor} = \frac{8.56\angle -104.4^\circ V}{-j10k\Omega}$$

$$i_{capacitor} = 0.856E-3\angle -14.4^\circ A$$

$$i_{R2} = \frac{v_b}{R_2}$$

$$i_{R2} = \frac{8.56\angle -104.4^\circ V}{5.6k\Omega}$$

$$i_{R2} = 1.53E-3\angle -104.4^{\circ} A$$

Finally, $0.856E-3\angle -14.4^{\circ} + 1.53E-3\angle -104.4^{\circ} + 2E-3\angle 90^{\circ}$ amps does indeed equal $0.544E-3\angle 34.4^{\circ}$ amps, within carried rounding error.

References

[1]Such as the one found in Chapter 2 of the companion text, DC Electrical Circuit Analysis, a companion free OER text by the author.

This page titled 5.2: Source Conversions is shared under a CC BY-NC-SA 4.0 license and was authored, remixed, and/or curated by James M. Fiore via source content that was edited to the style and standards of the LibreTexts platform.

5.3: Superposition Theorem

Superposition allows the analysis of multi-source AC series-parallel circuits. Superposition can only be applied to networks that are linear and bilateral. Fortunately, all of components we have discussed; resistors, capacitors and inductors, fall into that category. Further, superposition cannot be used to find values for non-linear functions, such as power, directly. This is not a limitation though because power can be computed from the resulting voltage or current values.

The basic idea is to determine the contribution of each source by itself, and then combine the results to get the final answer. The contributions are either all voltages or all currents, depending on need. We can state the superposition theorem as:

Theorem $5.3.1$: Superposition Theorem

Any voltage or current in a multi-source linear bilateral network may be determined by summing the contributions caused by each source acting alone, with all other source replaced by their internal impedance.

The process generates a series of new single-source circuits, one for each source. These new circuits are then analyzed for the parameter(s) of interest.

Consider the circuit depicted in Figure $5.3.1$.

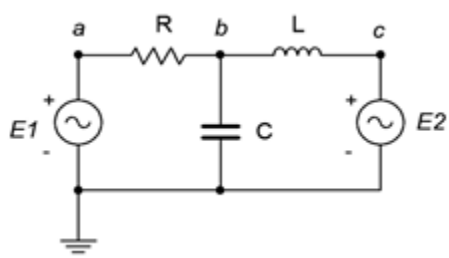

Figure $5.3.1$: A basic multi-source circuit.

Here we see two voltage sources, $E1$ and $E2$, driving a three element series-parallel network. As there are two sources, two derived circuits must be created; one using only $E1$ and the other using only $E2$. When considering a given source, all other sources are replaced by their ideal internal impedance: for a voltage source, that's a short; and for a current source, an open. We start by considering $E1$. In the new circuit $E2$ is replaced with a short. This leaves a fairly simple network where X_C and X_L are in parallel. This combination is in series with R and $E1$. Using basic series-parallel techniques, we can solve for desired quantities such as the current flowing through R or the voltage v_b. It is important to indicate the reference current direction and voltage polarity with respect to the source being considered (here, that's left-to-right and positive, respectively). The process is then repeated for $E2$, shorting $E1$ and leaving us with R in parallel with X_C, which is in turn in series with X_L and $E2$. Note that although in this version V_b is still positive, the reference current direction for R is now right-to-left. The numerical results from this version are added to those of the $E1$ version (minding polarities and directions) to achieve the final result. If power is needed, it can be computed from these currents or voltages. Note that superposition can work with a mix of current sources and voltage sources. The practical downside is that for large circuits using many sources, numerous derived circuits will need to be analyzed. For example, if there are three voltage sources and two current sources, then a total of five derived circuits will be created.

It is also possible to use superposition to find the resulting currents or voltages in a circuit that uses sources with different frequencies. In this instance, the equivalent circuits will have different reactance values. In fact, a single non-sinusoidal source can be analyzed using this method by treating the source as a series of superimposed sine waves with each sine source producing a new circuit with its own unique reactance values.

To summarize the superposition technique:

- For every voltage or current source in the original circuit, create a new sub-circuit. The sub-circuits will be identical to the original except that all sources other than the one under consideration will be replaced by their ideal internal impedance. This means that all remaining voltage sources will be shorted and all remaining current sources will be opened.

- Indicate the reference current directions and voltage polarities on each of the new sub-circuits, as generated by the source under consideration.
- Solve each of the sub-circuits for the desired voltages and/or currents using standard series-parallel analysis techniques. Make sure to note the reference voltage polarities and current directions for these items.
- Add all of the contributions from each of the sub-circuits to arrive at the final values, being sure to account for current directions and voltage polarities in the process.

To illustrate the superposition technique, let's reexamine the the dual source circuit shown in Figure 5.2.12 (repeated in Figure $5.3.2$ for ease of reference). We will solve this using superposition and compare the results to those of Example 5.2.3 which used source conversion.

Example $5.3.1$

For the circuit of Figure $5.3.2$, determine v_b using superposition. $I = 2E - 3\angle 90^\circ$ amps peak and $E = 10\angle 0^\circ$ volts peak.

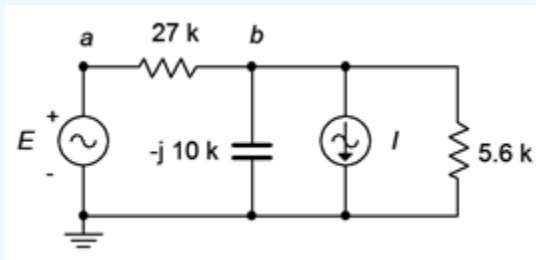

Figure $5.3.2$: Circuit for Example $5.3.1$.

As the circuit has two sources, it will require two sub-circuits. For the voltage source, the current source will be replaced with an open. For the second circuit utilizing the current source, the voltage source will be replaced with a short. First, using the voltage source we find:

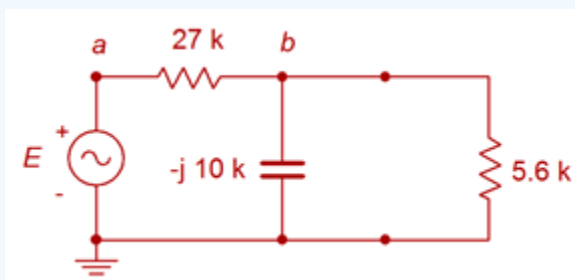

Figure $5.3.3$: Circuit of Figure $5.3.2$ considering voltage source.

For this circuit, v_b may be determined via a voltage divider. To proceed, we need the impedance of the parallel combo on the right.

$$Z_{right2} = \frac{R \times jX_C}{R - jX_C}$$

$$Z_{right2} = \frac{5.6k\Omega \times (-j10k\Omega)}{5.6k\Omega - j2k\Omega}$$

$$Z_{right2} = 4886\angle -29.2^\circ\Omega$$

Now for the voltage divider to find the contribution of the first source to v_b.

$$v_{b1} = E\frac{Z_{right2}}{Z_{right2} + R_1}$$

$$v_{b1} = 10\angle 0^\circ V\frac{4886\angle -29.2^\circ\Omega}{4886\angle -29.2^\circ\Omega + 27k\Omega}$$

$$v_{b1} = 1.558\angle -24.88^\circ V$$

We turn our attention to the current source's contribution. We short the voltage source and redraw:

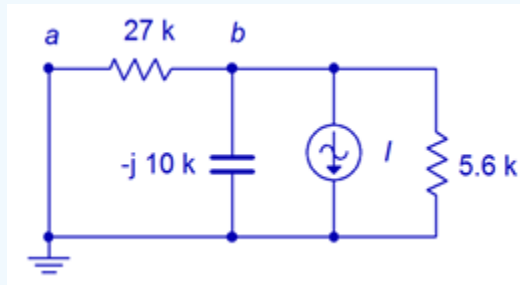

Figure $5.3.4$: Circuit of Figure $5.3.4$ considering current source.

This is a simple parallel circuit. We can find v_b by placing the resistors and capacitors in parallel, and then using Ohm's law. Note that the reference direction of the current source is downward, meaning that the component current is upward, which makes v_b negative (i.e., + to – bottom to top). The parallel impedance is:

$$Z_{total} = \frac{1}{\frac{1}{X_C} + \frac{1}{R_1} + \frac{1}{R_2}}$$

$$Z_{total} = \frac{1}{\frac{1}{-j10k\Omega} + \frac{1}{27k\Omega} + \frac{1}{5.6k\Omega}}$$

$$Z_{total} = 4208\angle -24.9^\circ \Omega$$

We apply Ohm's law to find this source's contribution to v_b.

$$v_{b2} = I \times Z_{total}$$

$$v_{b2} = -2E-3\angle 90^\circ A \times 4208\angle -24.9^\circ \Omega$$

$$v_{b2} = 8.416\angle -114.9^\circ V$$

The final result is the sum of the two parts:

$$v_b = v_{b1} + v_{b2}$$

$$v_b = 1.558\angle -24.88^\circ V + 8.416\angle -114.9^\circ V$$

$$v_b = 8.558\angle -104.4^\circ V$$

This is virtually the same value obtained using the source conversion technique in the prior example.

As mentioned previously, superposition can be used to determine the results even when the sources use different frequencies. This will be explored in the next example.

Example $5.3.2$

For the circuit of Figure $5.3.5$, determine v_b.

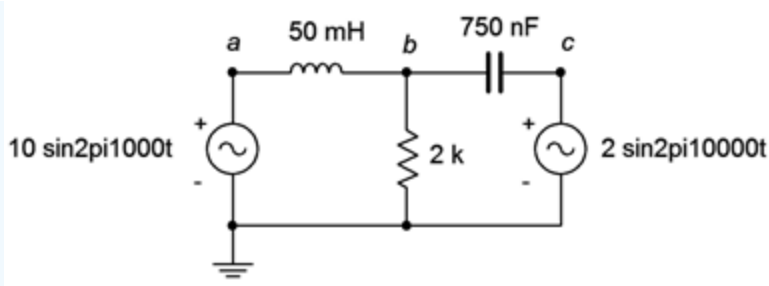

Figure 5.3.5: Circuit for Example 5.3.2.

Using superposition, we derive two new circuits, each with unique reactance values. The first circuit is shown in Figure 5.3.6.

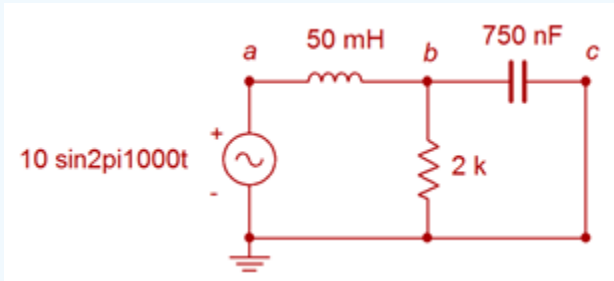

Figure 5.3.6: Circuit for Example 5.3.2, first source only.

The reactance values are:

$$X_L = j2\pi fL$$

$$X_L = j2\pi 1kHz50mH$$

$$X_L \approx j314.2\Omega$$

$$X_C = -j\frac{1}{2\pi fC}$$

$$X_C = -j\frac{1}{2\pi 1kHz750nF}$$

$$X_C \approx -j212.2\Omega$$

A voltage divider can be used to find this portion of v_b. The parallel combo of the 2 kΩ resistor and capacitor is $211\angle -83.9^\circ\Omega$.

$$v_{b1} = E\frac{Z_{right2}}{Z_{right2} + X_L}$$

$$v_{b1} = 10\angle 0^\circ V\frac{211\angle -83.9^\circ\Omega}{211\angle -83.9^\circ\Omega + 314.2\angle 90^\circ\Omega}$$

$$v_{b1} = 19.78\angle -161.9^\circ V$$

Remember, this waveform is at a frequency of 1 kHz. We can repeat this process for the second source which uses 10 kHz. At this new frequency the inductive reactance will be ten times larger, or $j3142\Omega$, and the capacitive reactance will be ten times smaller, or $-j21.22\Omega$. The new circuit is shown in Figure 5.3.7.

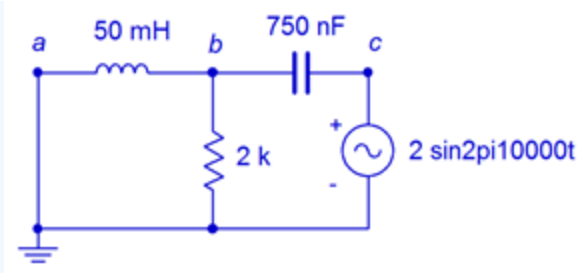

Figure 5.3.7: Circuit for Example 5.3.2, second source only.

Once again, a voltage divider can be used to find this portion of v_b. The parallel combo of the 2 kΩ resistor and inductor is $1687\angle 32.5^\circ\Omega$.

$$v_{b2} = E\frac{Z_{left2}}{Z_{left2} + X_C}$$

$$v_{b2} = 2\angle 0^\circ V\frac{1687\angle 32.5^\circ\Omega}{1687\angle 32.5^\circ\Omega + 21.22\angle -90^\circ\Omega}$$

$$v_{b2} = 2.01\angle 0.6^\circ V$$

This contribution is at a frequency of 10 kHz. Thus, the combination is a relatively small 10 kHz sine at about 2 volts peak riding on a 1 kHz sine that is nearly ten times larger in amplitude. This is shown in Figure 5.3.8.

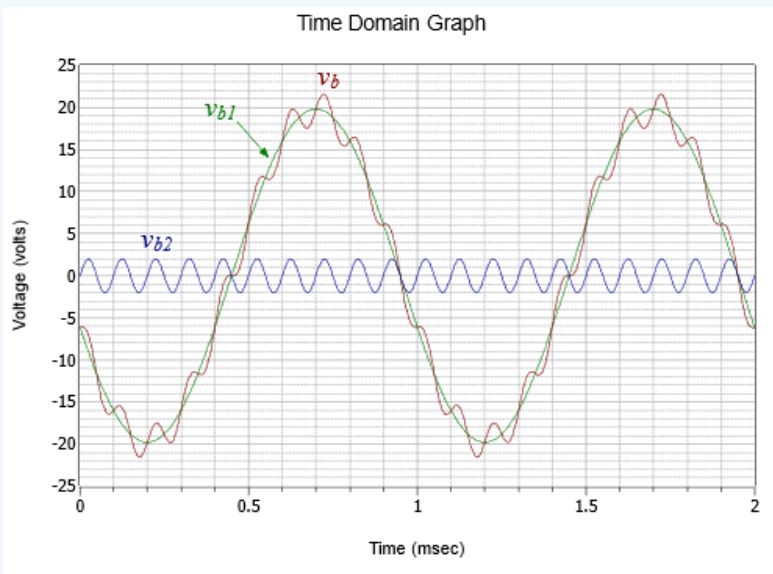

Figure 5.3.8: Voltage plot for Example 5.3.2.

Computer Simulation

In order to verify the two-component waveform of Example 5.3.2, the circuit of Figure 5.3.5 is captured in a simulator as shown in Figure 5.3.9.

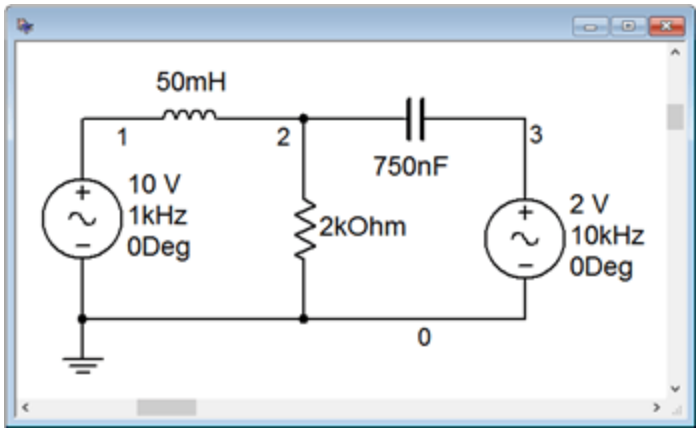

Figure 5.3.9: Circuit of Example 5.3.2 in a simulator.

A transient analysis is performed. The results are illustrated in Figure 5.3.10.

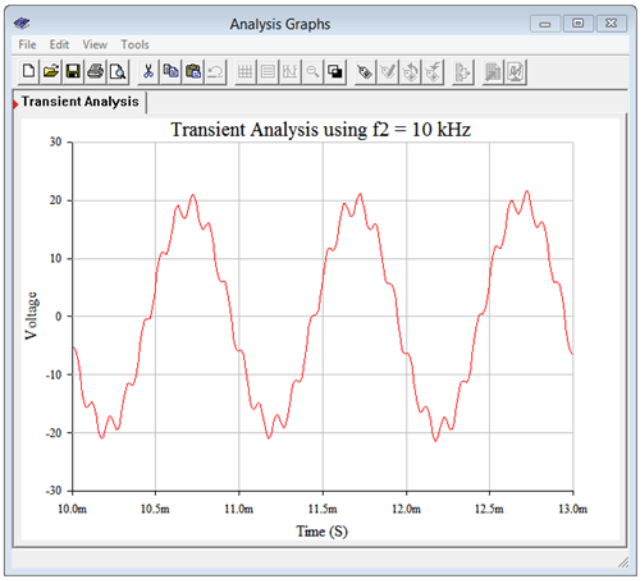

Figure 5.3.10: Simulation results for the circuit of Example 5.3.2.

The results match the computed values nicely. We can see the small amplitude high frequency sine wave effectively following the contour of the much larger 1 kHz sine wave.

This page titled 5.3: Superposition Theorem is shared under a CC BY-NC-SA 4.0 license and was authored, remixed, and/or curated by James M. Fiore via source content that was edited to the style and standards of the LibreTexts platform.

5.4: Thévenin's and Norton's Theorems

These theorems are related in that they allow complex linear networks to be simplified down to a single source with an associated internal impedance. They simplify analysis when checking a circuit with multiple possible loads.

Thévenin's Theorem

Thévenin's theorem is named after Léon Charles Thévenin. It states that:

$$\text{Any single port linear network can be reduced to a simple voltage source, } E_{th}, \text{ in series with an internal impedance } Z_{th}.$$

It is important to note that a Thévenin equivalent is valid only at a particular frequency. If the system frequency is changed, the reactance and impedance values will change and the resulting E_{th} and Z_{th} values will be altered. Consequently, these equivalents are generally not appropriate for a circuit using multiple sources with differing frequencies[1]. A generic example of a Thévenin equivalent is shown in Figure $5.4.1$.

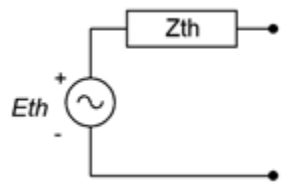

Figure $5.4.1$: Generic Thévenin equivalent circuit.

The phrase “single port network” means that the original circuit is cut in such a way that only two connections exist to the remainder of the circuit. That remainder may be a single component or a large multi-component sub-circuit. E_{th} is the open circuit voltage at the port and Z_{th} is the impedance looking back into the port (i.e., the equivalent that now drives the remainder). As there are many ways to cut a typical circuit, there are many possible Thévenin equivalents. Consider the circuit shown in Figure $5.4.2$.

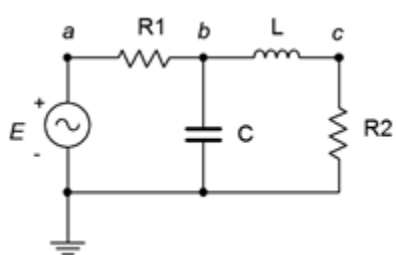

Figure $5.4.2$: Circuit under consideration for a Thévenin equivalent.

Suppose we want to find the Thévenin equivalent that drives R_2. We cut the circuit immediately to the left of R_2. That is, The first step is to make the cut, removing the remainder of the circuit. In this case the remainder is just R_2. We then determine the open circuit output voltage at the cut points (i.e., at the open port). This voltage is called the Thévenin voltage, E_{th}. This is shown in Figure $5.4.3$. In a circuit such as this, basic series-parallel analysis techniques may be used to find E_{th}. In this circuit, due to the open, no current flows through the inductor, L, and thus no voltage is developed across it. Therefore, E_{th} must equal the voltage developed across the capacitor, C.

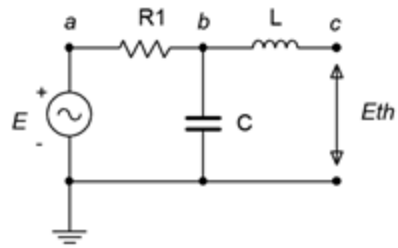

Figure $5.4.3$: E_{th},the open circuit output voltage.

The second part is finding the Thévenin impedance, Z_{th}. Beginning with the "cut" circuit, replace all sources with their ideal internal impedance (thus shorting voltage sources and opening current sources). From the perspective of the cut point, look back into the circuit and simplify to determine its equivalent impedance. This is shown in Figure $5.4.4$. Looking in from where the cut was made (right side), we see that R_1 and X_C are in parallel, and this combination is then in series with X_L. Thus, Z_{th} is equal to $jX_L + (R1|| - jX_C)$.

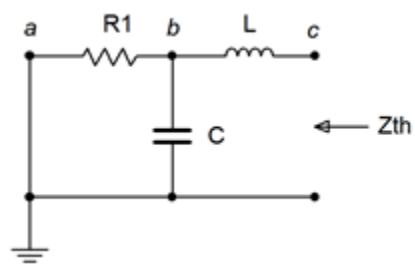

Figure $5.4.4$: Finding Z_{th}.

As noted earlier, the original circuit could be cut in a number of different ways. We might, for example, want to determine the Thévenin equivalent that drives C in the original circuit of Figure $5.4.2$. The new port location appears in Figure $5.4.5$.

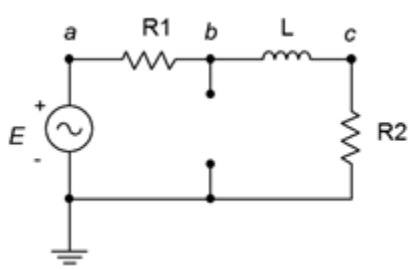

Figure $5.4.5$: An alternate port location.

Clearly, this will result in different values for both E_{th} and Z_{th}. For example, Z_{th} is now $R_1||(R_2 + jX_L)$.

A common error is to find Z_{th} from the wrong perspective, namely, finding the impedance that the source drives. This is flatly incorrect. Remember, Z_{th} is found by looking into the port and simplifying whatever is seen from there. One way to remember this is that it is possible to create equivalents for multi-source circuits. In that instance, there isn't a single driving source, so finding its load impedance is nonsensical.

Measuring the Thévenin Equivalent in the Laboratory

In a laboratory situation, the Thévenin equivalent can be found quickly and efficiently with the proper tools. First, the circuit is "cut", leaving just the portion to be Thévenized. The voltage at the cut points is measured with an oscilloscope. This is E_{th}. All of the sources are then replaced with their internal impedance, ideally shorting voltage sources and opening current sources[2]. An LCR impedance meter can then be connected to the port to read Z_{th}. If an impedance meter is not available, then the source(s) are left in place and an LCR substitution box is placed at the cut points. The box is adjusted so that the voltage across it is equal to half of E_{th}. By the voltage divider rule, the value of the substitution box must be equal to Z_{th}. In this case, the substitution box will yield either an inductance or capacitance value which can then be turned into a reactance given the frequency.

Example 5.4.1

For the circuit of Figure 5.4.6, determine the Thévenin equivalent that drives the 300 Ω resistor and find v_c. Assume the source angle is $0°$.

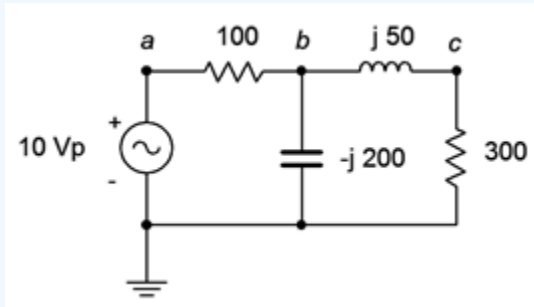

Figure 5.4.6: Circuit for Example 5.4.1.

First, let's find E_{th}, the open circuit output voltage. We cut the circuit so that the 300 Ω resistor is removed. Then we determine the voltage at the cut points. This circuit is shown in Figure 5.4.7.

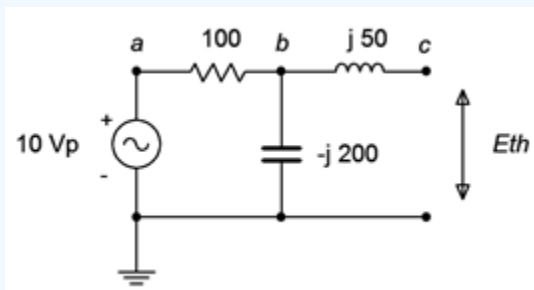

Figure 5.4.7: Circuit for finding E_{th} for Example 5.4.1.

There is no current flowing through the inductor due to the open. Therefore, the voltage across the inductor is zero. Consequently, E_{th} is the voltage across the capacitor, and that can be found with a voltage divider.

$$E_{th} = E\frac{X_C}{X_C + R_1}$$

$$E_{th} = 10\angle 0°V\frac{-j200\Omega}{-j200\Omega + 100\Omega}$$

$$E_{th} = 8.944\angle -26.6°V \text{ or } 8 - j4V$$

To find Z_{th}, we replace the source with a short and then look back in from the cut points. The equivalent circuit is shown in Figure 5.4.8. The inductor is in series with the parallel combination of the resistor and capacitor.

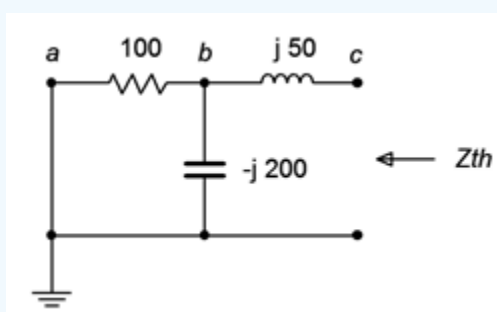

Figure 5.4.8: Circuit for finding Z_{th} for Example 5.4.1.

$$Z_{left2} = \frac{R \times jX_C}{R - jX_C}$$

$$Z_{left2} = \frac{100\Omega \times (-j200\Omega)}{100\Omega - j200\Omega}$$

$$Z_{left2} = 89.44\angle -26.6^\circ\Omega$$

$$Z_{th} = Z_{left2} + X_L$$

$$Z_{th} = 89.44\angle -26.6^\circ\Omega + j50\Omega$$

$$Z_{th} = 80.62\angle 7.12^\circ\Omega or 80 + j10\Omega$$

The completed equivalent is shown in Figure $5.4.9$.

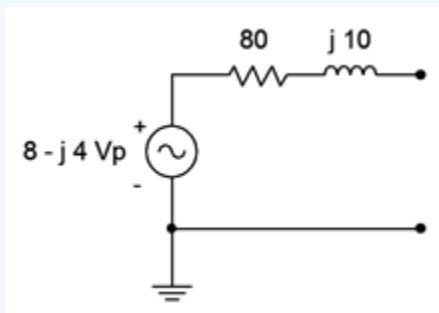

Figure $5.4.9$: Completed equivalent for Example $5.4.1$.

The voltage across the 300 Ω resistor can be found directly:

$$v_{R2} = E_{th}\frac{R_2}{Z_{th} + R_2}$$

$$v_{R2} = 8 - j4V\frac{300\Omega}{80 + j10\Omega + 300\Omega}$$

$$v_{R2} = 7.06\angle -28.1^\circ V$$

This value can be verified by following a standard series-parallel simplification. For example, the impedance of the three rightmost components $(181.4\angle -53.97^\circ\Omega)$ forms a voltage divider with the 100 Ω resistor and the 10 volt source. This leads to v_b $(7.156\angle -18.61^\circ$ volts). A second divider can then be used between v_b, the inductor and the 300 Ω resistor to find v_c, which is $7.06\angle -28.1^\circ$ volts as expected. The big advantage of using the Thévenin equivalent is that we can easily find v_c for any other value of load because we need only analyze the simpler equivalent circuit rather than the original.

Thévenin's theorem can also be used on multi-source circuits. The technique for finding Z_{th} does not change, however, finding E_{th} is a little more involved, as illustrated in the next example.

Example $5.4.2$

Find v_b for the circuit of Figure $5.4.10$ using Thévenin's theorem.

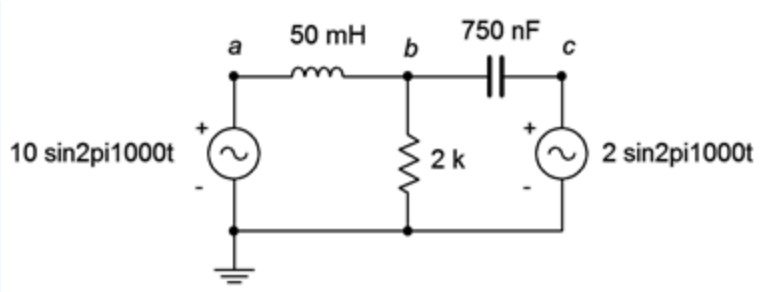

Figure 5.4.10: Circuit for Example 5.4.2.

This circuit is similar to the one used in Example 5.3.2 (Figure 5.3.5). The difference here is that the second source uses the same frequency as the first source. The reactance values are:

$$X_L = j314.2\Omega$$

$$X_C = -j212.2\Omega$$

The voltage across the 2 kΩ is v_b, so we'll treat that resistor as the load in order to define the equivalent circuit. This is redrawn in Figure 5.4.11.

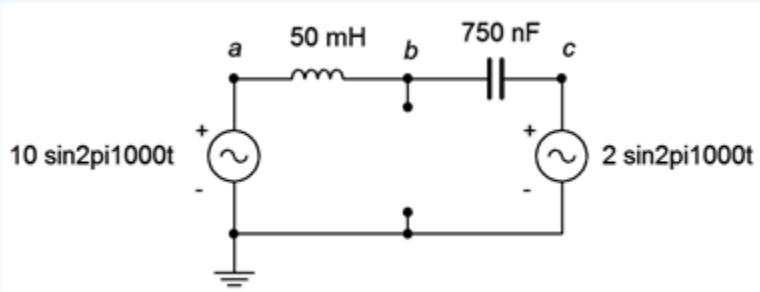

Figure 5.4.11: Circuit for finding equivalents for Figure 5.4.10.

To find Z_{th}, we short the two sources. We're left with the inductor and capacitor in parallel. If this is confusing, remember that we are looking from node b to ground (the cut points), so they are not in series. That is, if a sensing current entered at node b, it could split left and right, indicating parallel paths, not a series connection.

$$Z_{th} = \frac{-jX_C \times jX_L}{-jX_C + jX_L}$$

$$Z_{th} = \frac{-j212.2\Omega \times j314.2\Omega}{-j212.2\Omega + j314.2\Omega}$$

$$Z_{th} = -j653.7\Omega$$

We have a few options to find E_{th}. Superposition could be used, each circuit requiring a voltage divider. Alternately, the equivalent is basically a series loop as far as finding v_b is concerned. Thus, we could find the voltage across the inductor and subtract that from the left source (assuming a reference current direction of clockwise). Finding the inductor voltage requires either a voltage divider or finding the current. Neither approach is considerably less work than the other, and it's probably a good idea to get in a little more practice using superposition, so...

Considering the left source, we short the right source and find v_b.

$$v_{bR} = E_1 \frac{X_C}{X_C + X_L}$$

$$v_{bR} = 10\angle 0^\circ V \frac{-j212.2\Omega}{-j212.2\Omega + j314.2\Omega}$$

$$v_{bR} = 20.84\angle 180^\circ V \text{ or } -20.84\angle 0^\circ V$$

For the right source, we short the left source and find v_b. Then we add the two contributions to find the final voltage. Note that both sources will produce a reference polarity of + to – from top to bottom.

$$v_{bL} = E_2 \frac{X_C}{X_C + X_L}$$

$$v_{bL} = 2\angle 0^\circ V \frac{j314.2\Omega}{-j212.2\Omega + j314.2\Omega}$$

$$v_{bL} = 6.16\angle 0^\circ V$$

The sum of the two is $-20.84\angle 0^\circ + 6.16\angle 0^\circ$, or $14.68\angle 180^\circ$ volts. The Thévenin equivalent is a source of $14.68\angle 180^\circ$ volts in series with an impedance of $-j653.7\Omega$.

To find the voltage across the 2 kΩ resistor, we apply it to the equivalent circuit and solve.

$$v_b = E_{th} \frac{R}{R + Z_{th}}$$

$$v_b = 14.68\angle 180^\circ V \frac{2k\Omega}{2k\Omega + (-j653.7\Omega)}$$

$$v_b = 13.95\angle -161.9^\circ V$$

Computer Simulation

To verify the results of the preceding example, the circuit of Figure $5.4.10$ is captured in a simulator, as shown in Figure $5.4.12$.

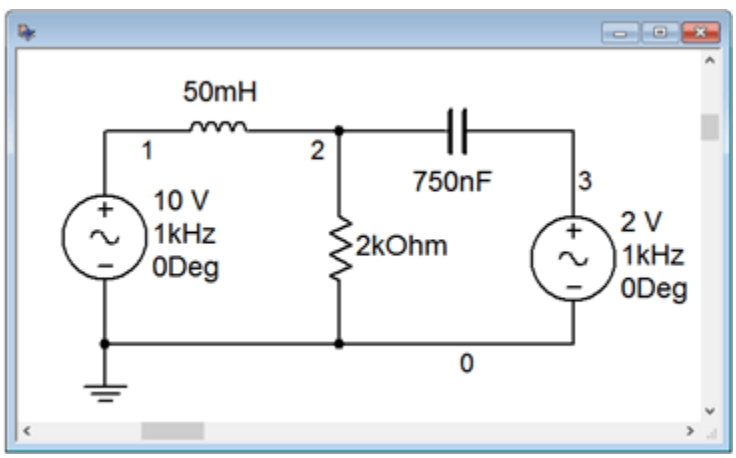

Figure $5.4.12$: The circuit of Figure $5.4.10$ captured in a simulator.

Next, a transient analysis is run, plotting the voltage at node 2, which corresponds to v_b in the original circuit. The result is shown in Figure $5.4.13$. The plot is delayed by 0.1 seconds in order to get past the initial turn-on transient.

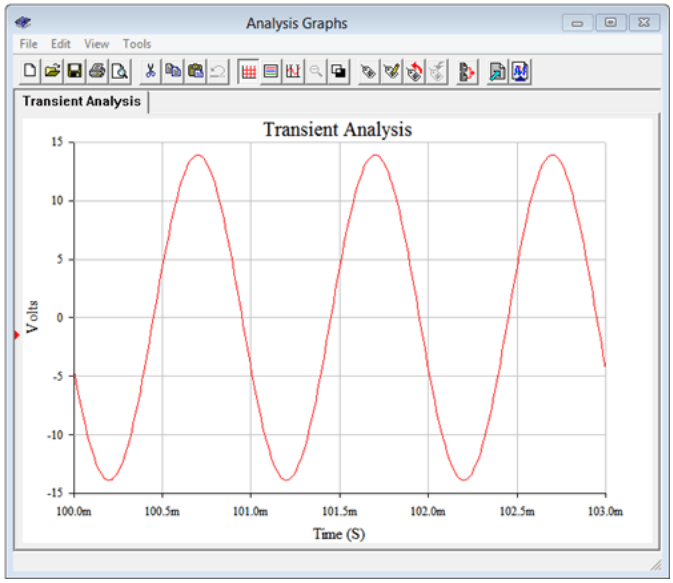

Figure 5.4.13: Simulation results for the circuit of Figure 5.4.10.

Both the amplitude and phase of the simulation waveform match the computed results.

Norton's Theorem

Norton's theorem is named after Edward Lawry Norton. It is the current source version of Thévenin's theorem. In other words, complex networks can be reduced to a single current source with a parallel internal impedance. Formally, Norton's theorem states:

$$\text{Any single port linear network can be reduced to a simple voltage source, } I_n, \text{ in parallel with an internal impedance } Z_n.$$

The process of finding a Norton equivalent is very similar to finding a Thévenin equivalent. First, the Norton impedance is the same as the Thévenin impedance. Second, instead of finding the open circuit output voltage, the short circuit output current is found. This is the Norton current. Due to the equivalence afforded by source conversions, if a Thévenin equivalent for a network can be created, then it must be possible to create a Norton equivalent. Indeed, if a Thévenin equivalent is found, a source conversion can be performed on it to yield the Norton equivalent.

Example 5.4.3

Let's reexamine Example 5.4.1, this time creating a Norton equivalent circuit. For convenience, the original circuit of Figure 5.4.6 is repeated in Figure 5.4.14. Once again, the goal will be to determine the equivalent that drives the 300 Ω resistor and to find vc.

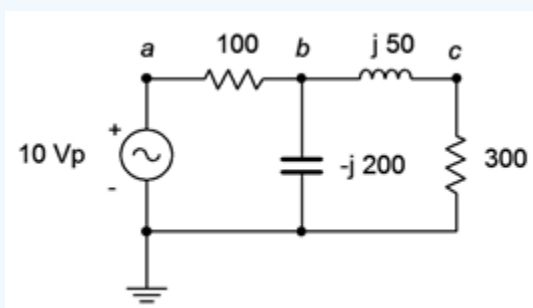

Figure 5.4.14: Circuit for Example 5.4.3.

As noted, the Norton impedance, Z_n, is the same as Z_{th}. That was $80 + j10\Omega$. The Norton current, I_n, is the short-circuit current through the cut points. We can think of this as replacing the load resistor with an ammeter. This is the same as the current through the inductor. In this situation, the capacitor and inductor are in parallel and yield an impedance of $j66.67\Omega$. Thus, the source current is:

$$i_{source} = \frac{E}{R + Z_{LC}}$$

$$i_{source} = \frac{10\angle 0^\circ}{100\Omega + j66.67\Omega}$$

$$i_{source} = 83.2E - 3\angle - 33.7^\circ A$$

This splits between the capacitor and inductor. Using the current divider rule we find:

$$i_n = i_{inductor} = I_{source}\frac{X_C}{X_C + X_L}$$

$$i_n = 83.2\angle - 33.7^\circ A\frac{-j200\Omega}{-j200\Omega + j50\Omega}$$

$$i_n = 0.1109\angle - 33.7^\circ A$$

A source conversion can be applied to verify this value. The resulting voltage source is $8 - j4$ volts, precisely the value of the Thévenin equivalent.

Ultimately, deciding between using the Thévenin or Norton equivalents is a matter of personal taste and convenience. They work equally well.

References

[1]It is possible that an equivalent can be valid across a specified range of frequencies, but it will not hold for all frequencies.

[2]A typical laboratory signal generator has a 50 Ω internal impedance, and using this value would be more accurate than just replacing the source with a shorting wire.

This page titled 5.4: Thévenin's and Norton's Theorems is shared under a CC BY-NC-SA 4.0 license and was authored, remixed, and/or curated by James M. Fiore via source content that was edited to the style and standards of the LibreTexts platform.

5.5: Maximum Power Transfer Theorem

The concept of maximum power transfer in DC resistive circuits was presented in earlier work. While maximizing load power is not a goal of all circuit designs, it is a goal of a portion of them and thus worth a closer look. In short, given an AC voltage source with internal impedance, as seen in Figure $5.5.1$, a useful question to ask is "What value of load impedance will yield the maximum amount of power in the load?" In the DC case, it was discovered that the load resistance must equal the source resistance in order to achieve maximum load power. In the AC case things appear to be much more complicated by the possible presence of reactances in both the source and load.

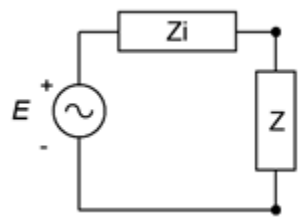

Figure $5.5.1$: Defining maximum power transfer.

As a refresher of prior study, consider the basic circuit depicted in Figure $5.5.1$ with source E, source internal resistance Z_i and load impedance Z. For the moment, we shall ignore the reactive portions and just describe the load power in terms of the load's resistive portion, R. To make the job easier, we may normalize the source resistance R_i to 1 Ω. By doing this, R also becomes a normalized value, that is, it no longer represents a simple resistance value but rather represents a ratio in comparison to R_i. In this way the analysis will work for any set of source values. Note that the value of E will equally scale the power in both R_i and R, so a precise value is not needed, and thus, we may as well chose 1 volt for convenience.

The power in the load can be determined by using I^2R where $I = E/(R_i + R)$, yielding

$$P = \left(\frac{E}{R_i + R}\right)^2 R$$

Using our normalized values of 1 volt and 1 Ω,

$$P = \left(\frac{1}{1 + R}\right)^2 R$$

After expanding we arrive at:

$$P = \frac{R}{R^2 + 2R + 1} \tag{5.5.1}$$

We now have an equation that describes the load power in terms of the load resistance. Before we go any further, take a look at what this equation tells you, in general. It is obvious that maximum power will not occur at the extremes. If $R = 0$ or $R = \infty$ (i.e., shorted or opened load) the load power is zero. The maximizing case occurs somewhere in the middle. To find the precise value that produces the maximum load power, the proof can be divided into two portions. The first involves graphing the function and the second requires differential calculus to solve for a precise value. We shall proceed with the graphing portion which will lead us to the answer. The more rigorous proof of the second portion is detailed in Appendix C.

The curve of Equation $5.5.1$ is plotted in Figure $5.5.2$. The normalized load resistance is set along the horizontal and the normalized power (i.e., for a source of 1 volt) is set along the vertical.

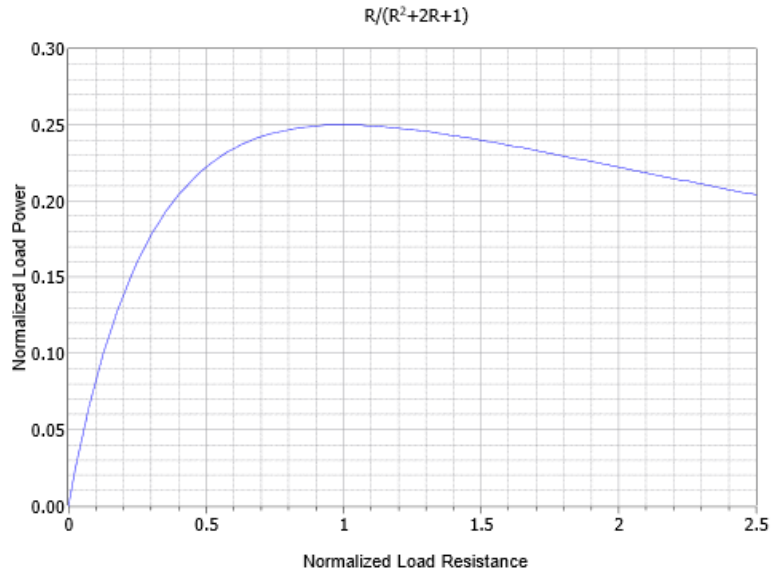

Figure $5.5.2$: The resistive portion of the power equation plotted.

An examination of the power curve shows that the peak occurs at $R = 1$. In other words, the load must be equal to the source resistance. Thus, we can say that if no reactances are involved, maximum load power occurs when the load resistance equals the source resistance. It does not matter if the source is DC or AC.

The graph shown in Figure $5.5.2$ is asymmetric but the concept of resistance ratios is key here. This is easier to see if we plot the completed power curve using a logarithmic horizontal axis and also scale the vertical axis to 100%, as shown in Figure $5.5.3$. The peak is more apparent and the curve is symmetrical in shape rather than lopsided. This reinforces the idea that the ratio of the resistances is what matters.

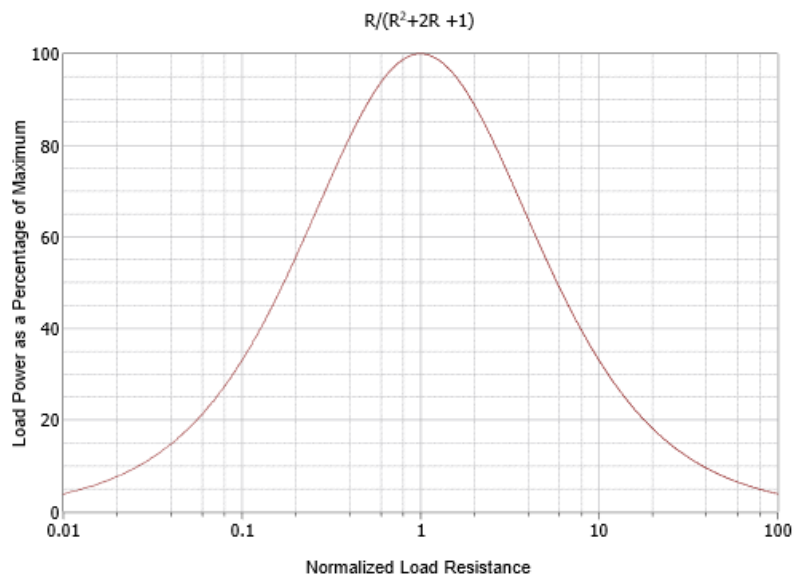

Figure $5.5.3$: The load power curve with logarithmic axis showing symmetry.

At this point we may turn our attention to the possible presence of reactances in both the source and load. It turns out that this is not nearly as complicated as it might look. The key is that only resistors dissipate power, not inductors or capacitors[1]. Load power is proportional to i_{load}^2, so our immediate goal is to maximize load current for any set of source and load resistances.

We can modify the original power equation by adding a new term, X, which represents the net reactance in the circuit. In other words, X is equal to the sum of the reactances in the source impedance and load impedance. The power in the load is still determined by using I^2R, however, we must now include the X term when computing the current:

\[I = \frac{E}{\sqrt{((R_i+R)^2+X^2)} \nonumber \]

This leads is to a new load power expression:

\[P = \left(\frac{E}{\sqrt{((R_i+R)^2+X^2) \right)^2 R \label{5.2} \]

A cursory look at Equation ??? shows that to maximize P, X must be zero. A normalized plot of this equation is shown in Figure $5.5.4$ for $R = R_i$.

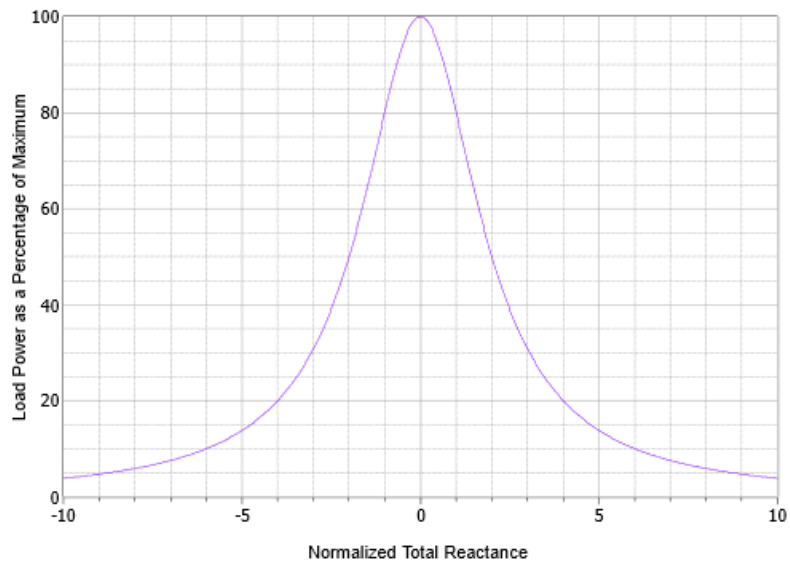

Figure $5.5.4$: The reactive portion of the power equation plotted using matched resistance.

A single peak is evident when X is 0. This can be achieved by setting the load reactance equal in magnitude to the source reactance but with the opposite sign. In this manner, the reactances will cancel out, leaving a purely resistive circuit with a minimal value, and thus producing maximal current for that set of resistors.

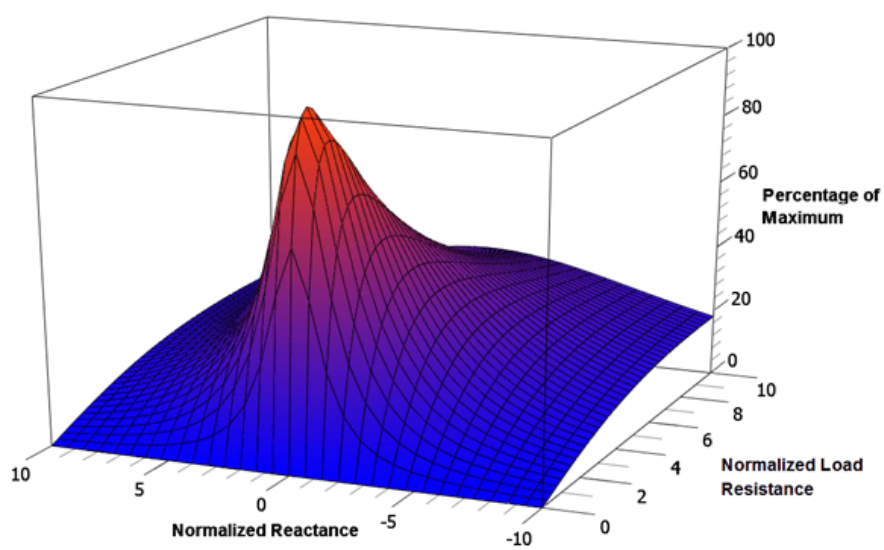

Figure $5.5.5$: The load power surface showing variations with both load resistance and total reactance.

Two variables are involved here, so to further clarify the situation, a 3D surface plot of normalized power is shown in Figure $5.5.5$. The vertical axis represents the percentage of maximum power while the front and side axes are the normalized total reactance and load resistance, respectively. A single peak is evident here and coincides with $X = 0$ and $R = 1$. This is more easily seen by viewing the surface from the back as shown in Figure $5.5.6$. Note that the highest isocontour encircles the intersection of $X = 0$

and $R = 1$ (i.e., \R_{load} = R_i\)).

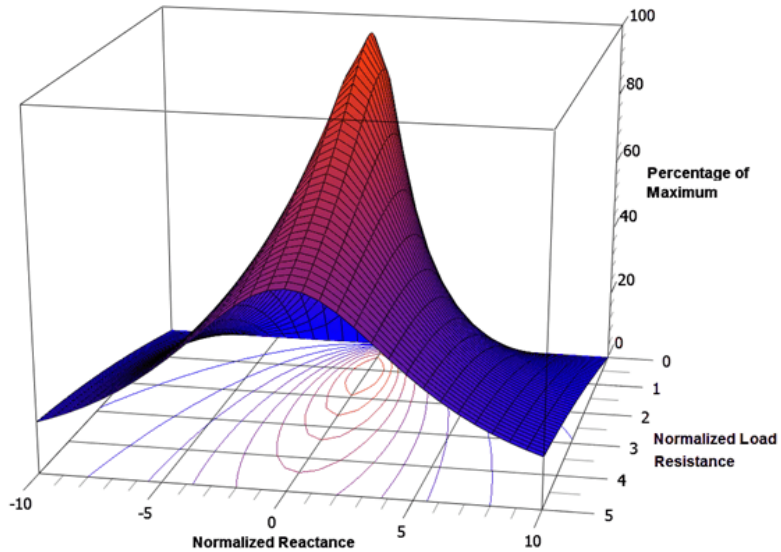

Figure $5.5.6$: An alternate view of the load power surface.

In sum, we have verified that the resistive portions of the source and load impedance must be identical and that the reactive portions must be of the same magnitude but of opposite sign. This configuration is also known as the complex conjugate. Finally, we can state:

$$\text{Maximum load power will be achieved when the load impedance is equal to the complex conjugate of the internal impedance of the}$$

No other value of load impedance will produce a higher load power. We can imagine two general cases, one with an inductive source impedance and another with a capacitive source impedance. These are shown with the proper loads in Figure $5.5.7$.

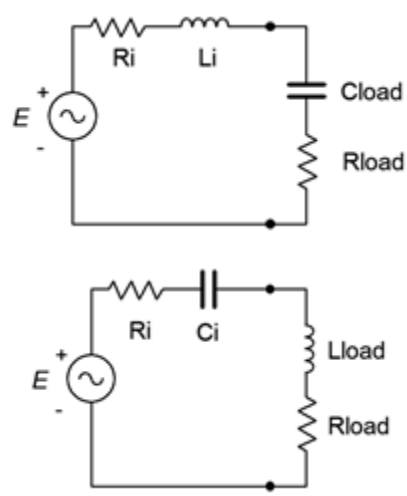

Figure $5.5.7$: Configurations for complex conjugate loads.

To achieve maximum load power in these circuits, $R_{load} = R_i$ and $|jX_L| = |-jX_C|$. Note that X_L and X_C do not have to have the same magnitude as R_i.

While using the complex conjugate produces the maximum load power, it does not produce the largest possible load current or load voltage. In fact, this condition produces a load voltage and a load current that are half of their maximums. Their product, however, is at the maximum. Further, efficiency at maximum load power is only 50% (i.e., only half of all generated power goes to the load with the other half being wasted internally). Values of R greater than R_i will achieve higher efficiency but at reduced load power. Sometimes we favor efficiency over maximal load power.

As any linear single port network can be reduced to something like Figure $5.5.7$ by using Thévenin's theorem, combining the two theorems allows us to determine maximum power conditions for any impedance in a complex circuit.

Example $5.5.1$

Consider the circuit of Figure $5.5.8$. What is the power generated in the load if it is equal to $40\ \Omega$? Further, is that the maximum power that can be attained, and if not, what is the maximum load power and what value of load would be needed?

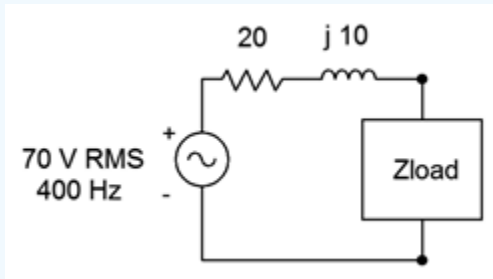

Figure $5.5.8$: Circuit for Example $5.5.1$.

To find the load power, first find the circulating current, then use power law. The total impedance seen by the source is $20 + j10\Omega + 40\Omega$, or $60 + j10\Omega$.

$$i = \frac{E}{Z_{total}}$$

$$i = \frac{70V}{60\Omega + j10\Omega}$$

$$i = 1.151\angle -9.5^{\circ} A$$

As the voltage and current are in phase for a resistor, we can ignore the angle for the power calculation.

$$P_{load} = i^2 \times R_{load}$$

$$P_{load} = (1.151A)^2 \times 40\Omega$$

$$P_{load} \approx 53W$$

This is not the maximum load power that can be achieved because this load is not the complex conjugate of the source impedance. The required load for maximum load power is shown in Figure $5.5.9$.

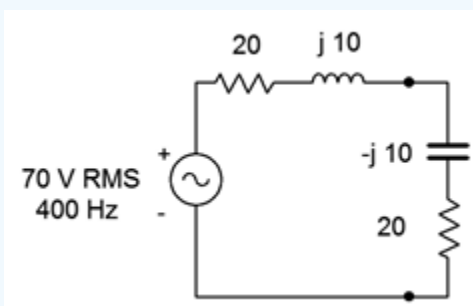

Figure $5.5.9$: Circuit of Figure $5.5.8$ with proper load configuration.

We shall repeat the process to find the new load power.

$$i = \frac{E}{Z_{total}}$$

$$i = \frac{70V}{40\Omega}$$

$$i = 1.75\angle 0^\circ A$$

$$P_{load} = i^2 \times R_{load}$$

$$P_{load} = (1.75A)^2 \times 20\Omega$$

$$P_{load} = 61.25W$$

An alternate method notes that the new circuit's total impedance is purely resistive and that the source and load resistances are identical. Therefore the voltage source must split evenly across them. In this case that's 35 volts RMS each.

$$P_{load} = \frac{v_R^2}{R_{load}}$$

$$P_{load} = \frac{(35V)^2}{20\Omega}$$

$$P_{load} = 61.25W$$

Example 5.5.2

For the circuit of Figure 5.5.10, determine the value of Z_{load} that will achieve maximum load power and also determine that power. The current source is $0.1\angle 0^\circ$ amps RMS at 50 kHz.

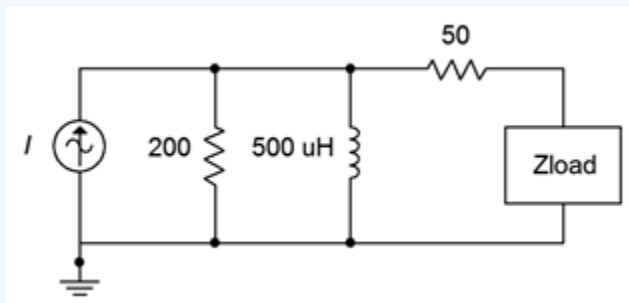

Figure 5.5.10: Circuit for Example 5.5.2.

The first job is determine the inductive reactance at 50 kHz. Recalling that $X_L = j2\pi fL$, this works out to $j157\Omega$. We now need to find the Thévenin equivalent. To find Z_{th} we open the current source and look back in from the load. We see the 50 Ω resistor in series with the parallel combination of the 200 Ω resistor and the inductor. The parallel combination is:

$$Z = \frac{R \times jX_L}{R + jX_L}$$

$$Z = \frac{200\Omega \times (j157\Omega)}{200\Omega + j157\Omega}$$

$$Z = 76.3 + j97.2\Omega$$

Therefore, $Z_{th} = 126.3 + j97.2\Omega$. The complex conjugate is $126.3 - j97.2\Omega$. The capacitive reactance formula may be used to determine the appropriate capacitance value to achieve $-j97.2\Omega$.

$$C = \frac{1}{2\pi fX_C}$$

$$C = \frac{1}{2\pi 50kHz97.2\Omega}$$

$$C = 32.8nF$$

The resulting circuit is shown in Figure $5.5.11$.

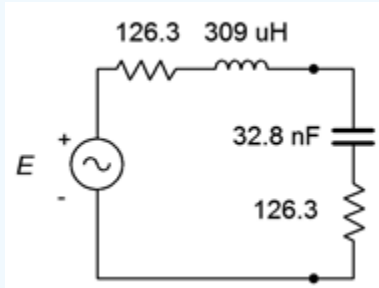

Figure $5.5.11$: Thévenin equivalent of the circuit of Figure $5.5.10$ with appropriate load.

To find the load power we need to find E_{th}. The open circuit output voltage is the potential appearing across the inductor/resistor pair in Figure $5.5.10$. This is because there is no current flowing through the 50 Ω resistor, and therefore there is no voltage across it. E_{th} can be found via Ohm's law as we already know the impedance of the parallel branch.

$$E_{th} = i \times Z$$

$$E_{th} = 0.1\angle 0^{\circ} A \times (76.3 + j97.2\Omega)$$

$$E_{th} = 12.4\angle 51.9^{\circ} V$$

Again, using the complex conjugate, the voltage source splits evenly between the resistive components. As the current source was specified as RMS, so too will be the equivalent voltage.

$$P_{load} = \frac{v_R^2}{R_{load}}$$

$$P_{load} = \frac{(6.2V)^2}{126.3\Omega}$$

$$P_{load} = 304.4mW$$

This represents the maximum load power that can be achieved in this circuit. Do not forgot, though, that an equal amount of power is dissipated by the source. This produces an efficiency of just 50%.

In summation, we can say that maximum load power is achieved when the load impedance is equal to the complex conjugate of the internal impedance of the circuitry driving the load. Usually, this requires the application of either a Thévenin or Norton equivalent. Finally, although maximum power transfer is a desired outcome in some situations, it is not desirable in all situations. The reason is one of efficiency. At the maximum load power, efficiency is only 50%. In contrast, for load impedances that are greater than the source impedance, the load power will decrease, however, the efficiency will increase. Increased efficiency is particularly important when striving to minimize heat and extend battery life.

References

[1]Power in AC circuits is examined in great detail in Chapter 7.

This page titled 5.5: Maximum Power Transfer Theorem is shared under a CC BY-NC-SA 4.0 license and was authored, remixed, and/or curated by James M. Fiore via source content that was edited to the style and standards of the LibreTexts platform.

5.6: Delta-Y (Pi-T) Conversions

Certain component configurations, such as bridged networks, cannot be reduced to a single impedance using basic series-parallel conversion techniques. One method for simplification involves converting sections into more convenient forms. The configurations in question are networks with three external connection points. Due to the manner in which they drawn, they are referred to as delta networks and Y networks[1]. These configurations are shown in Figure $5.6.1$. Note that the terminal designation of the delta version are upside down compared to those of the Y configuration.

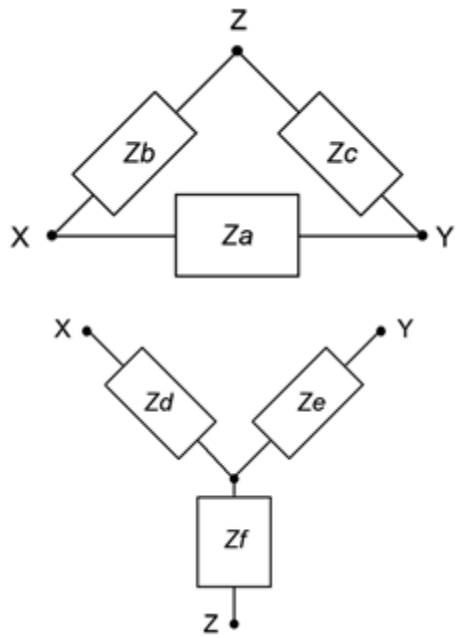

Figure $5.6.1$: Delta and Y (Δ-Y) networks.

These networks can be redrawn without angles. In this form they are known as pi (also called "π") networks and T (also called "tee") networks. These configurations are shown in Figure $5.6.2$.

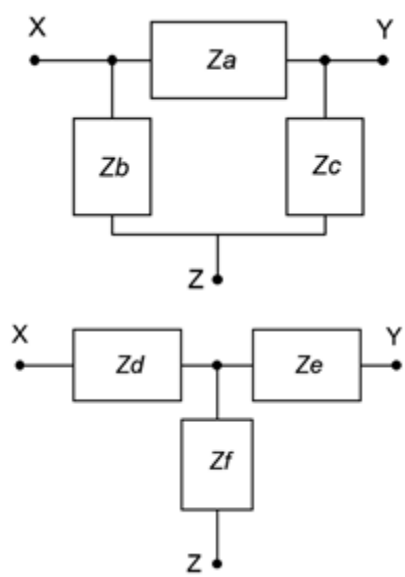

Figure $5.6.2$: Alternate form: Pi and T (π-T) networks.

It is possible to convert back and forth between delta and Y networks in many cases. That is, for a given delta network, there may exist a Y network such that the impedances seen between the X, Y and Z terminals are identical, and vice versa. Consequently, one configuration can replace another in order to simplify a larger circuit. Unlike the DC version, certain AC networks cannot be converted using the following technique (see the final Challenge problem for an investigation of this).

Δ-Y Conversion

A true equivalent circuit would present the same impedance between any two terminals as the original circuit. Consider the circuits of Figure $5.6.1$ for the unloaded case (i.e., just these networks with nothing else connected to them). The equivalent impedances seen between each pair of terminals for the delta and the Y respectively are:

$$Z_{XY} = Z_a||(Z_b + Z_c) = Z_d + Z_e \tag{5.6.1}$$

$$Z_{XZ} = Z_b||(Z_a + Z_c) = Z_d + Z_f \tag{5.6.2}$$

$$Z_{ZY} = Z_c||(Z_b + Z_a) = Z_e + Z_f \tag{5.6.3}$$

Let's assume that we have the delta network and are looking for the Y network equivalent. We start by focusing on the final set of terms for each of the three expressions (e.g., $Z_{XY} = Z_d + Z_e$). Note that we have three equations with three unknowns (Z_d, Z_e and Z_f). Thus, they can be solved using a term elimination process. If we subtract Equation $5.6.3$ from Equation $5.6.1$, we can eliminate the second impedance (Z_e) and arrive at a difference between the first and third unknown impedance s ($Z_d - Z_f$). This quantity can then be added to Equation $5.6.2$ to eliminate the third impedance (Z_f), leaving just the first unknown impedance (Z_d).

$$(Z_d + Z_e) - (Z_e + Z_f) = (Z_d - Z_f) = Z_a||(Z_b + Z_c) - Z_b||(Z_a + Z_c)$$

$$(Z_d + Z_f) + (Z - d - Z_f) = 2Z_d = 2(Z_b||(Z_a + Z_c) + Z_a||(Z_b + Z_c) - Z_c||(Z_a + Z_b))$$

Therefore,

$$Z_d = Z_b||(Z_a + Z_c) + Z_a||(Z_b + Z_c) - Z_c||(Z_a + Z_b)$$

which, after simplifying[2], is:

$$Z_d = \frac{Z_a Z_b}{Z_a + Z_b + Z_c} \tag{5.6.4}$$

Similarly, we can show that

$$Z_e = \frac{Z_a Z_c}{Z_a + Z_b + Z_c} \tag{5.6.5}$$

$$Z_f = \frac{Z_b Z_c}{Z_a + Z_b + Z_c} \tag{5.6.6}$$

Note that if the magnitudes and angles of three original impedances are identical, the magnitudes of the Y equivalent impedances will all be one-third of the original magnitude, and with the original phase angle.

Y-Δ Conversion

For the reverse process of converting from Y to delta, start by noting the similarities of the expressions for Z_d, Z_e and Z_f (i.e., Equations $5.6.4$ through $5.6.6$). If two of these expressions are divided, a single equation for Z_a, Z_b or Z_c will result. For example, using Equations $5.6.4$ and $5.6.5$:

$$\frac{Z_d}{Z_e} = \frac{\frac{Z_a Z_b}{Z_a + Z_b + Z_c}}{\frac{Z_a Z_c}{Z_a + Z_b + Z_c}}$$

$$\frac{Z_d}{Z_e} = \frac{Z_a}{Z_b}\frac{Z_a}{Z_c}$$

$$\frac{Z_d}{Z_e} = \frac{Z_b}{Z_c}$$

Therefore,

$$\frac{Z_b}{Z_c} = \frac{Z_d}{Z_e}$$

$$Z_b = \frac{Z_c Z_d}{Z_e}$$

This process can be repeated for Equations 5.6.4 and 5.6.6 to obtain an expression for Z_a. The two expressions for Z_a and Z_b can then be substituted into Equation 5.6.4 to obtain an expression for Z_c that utilizes only Z_d, Z_e and Z_f. A similar process is followed for Z_a and Z_b resulting in:

$$Z_a = \frac{Z_d Z_e + Z_e Z_f + Z_d Z_f}{Z_f} \tag{5.6.7}$$

$$Z_b = \frac{Z_d Z_e + Z_e Z_f + Z_d Z_f}{Z_e} \tag{5.6.8}$$

$$Z_c = \frac{Z_d Z_e + Z_e Z_f + Z_d Z_f}{Z_d} \tag{5.6.9}$$

If the Y network consists of three identical impedances, then the values of the delta equivalent will all be three times the original magnitude, the inverse of the situation when converting from delta to Y.

In summation, equations 5.6.4, 5.6.5 and 5.6.6 can be used to convert a delta network into a Y network, and equations 5.6.7, 5.6.8 and 5.6.9 can be used to convert a Y network into a delta network. Examples of how to apply this technique to tame up-to-now intractable series-parallel networks follow.

Example 5.6.1

Convert the network of Figure 5.6.3 into its delta configuration equivalent.

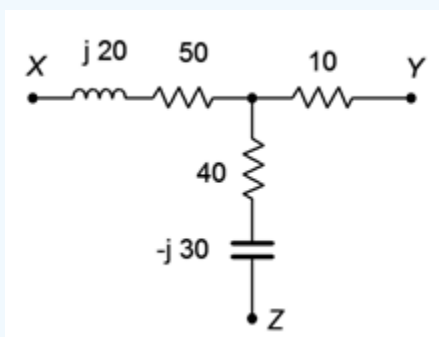

Figure 5.6.3: Network for Example 5.6.1.

Referring back to Figure 5.6.2, use Equation 5.6.7 to determine Z_a.

$$Z_a = \frac{Z_d Z_e + Z_e Z_f + Z_d Z_f}{Z_f}$$

$$Z_a = \frac{(50 + j20\Omega)(10\Omega) + (10\Omega)(40 - j30\Omega) + (50 + j20\Omega)(40 - j30\Omega)}{(40 - j30\Omega)}$$

$$Z_a = 65.6 + j29.2\Omega$$

Z_b and Z_c may be determined in similar manner using Equations 5.6.8 and 5.6.9:

$$Z_b = 350 - j80\Omega$$

$$Z_c = 54.8 - j37.9\Omega$$

The equivalent is shown in Figure 5.6.4.

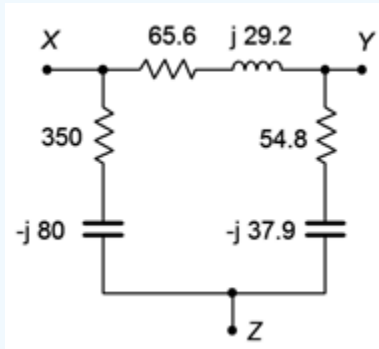

Figure 5.6.4: Equivalent delta network for the Y network of Figure 5.6.3.

Remember, a complex impedance can always be expressed in rectangular form. Rectangular form can be expressed directly as a series combination of a resistor and either an inductive or capacitive reactance. Even if the original impedances of a network are in a parallel form (or even a more complex form), the equivalent can be expressed as a series combination.

Example 5.6.2

Determine v_a in the circuit of Figure 5.6.5. Assume the source has a phase angle of zero degrees.

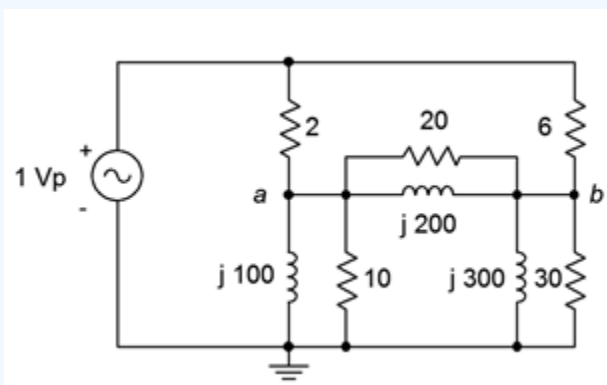

Figure 5.6.5: Circuit for Example 5.6.2.

This circuit cannot be simplified sufficiently using basic series-parallel techniques due to the bridge section. The components between and below nodes a and b comprise a delta network, as shown in Figure 5.6.6. If this network is replaced with a Y equivalent, the resulting circuit reduces to a simple series-parallel system.

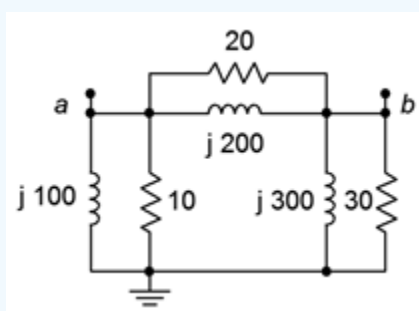

Figure 5.6.6: Delta network within the circuit of Figure 5.6.5.

Before continuing, it would be helpful to determine the impedance of each of the parallel sections. For the leftmost pair:

$$Z_{left2} = \frac{R \times jX_L}{R + jX_L}$$

$$Z_{left2} = \frac{10\Omega \times j100\Omega}{10\Omega + j100\Omega}$$

$$Z_{left2} = 9.9 + j0.99\Omega$$

In similar manner, the top pair is determined to be $19.8 + j1.98\Omega$ and the rightmost pair is $29.7 + j2.97\Omega$. Referring back to Figure $5.6.2$, we can use Equation $5.6.4$ to determine Z_d.

$$Z_d = \frac{Z_a Z_b}{Z_a + Z_b + Z_c}$$

$$Z_d = \frac{(19.8 + j1.98\Omega) \times (9.9 + j0.99\Omega)}{(19.8 + j1.98\Omega) + (9.9 + j0.99\Omega) + (29.7 + j2.97\Omega)}$$

$$Z_d = 3.3 + j0.33\Omega$$

Likewise, we can use Equations $5.6.5$ and $5.6.6$ to determine Z_e and Z_f.

$$Z_e = 9.9 + j0.99\Omega$$

$$Z_f = 4.95 + j0.495\Omega$$

Swapping the equivalent Y network into the original circuit leads us to the circuit of Figure $5.6.7$ (Y network shown in blue). This circuit can be simplified directly to find v_a.

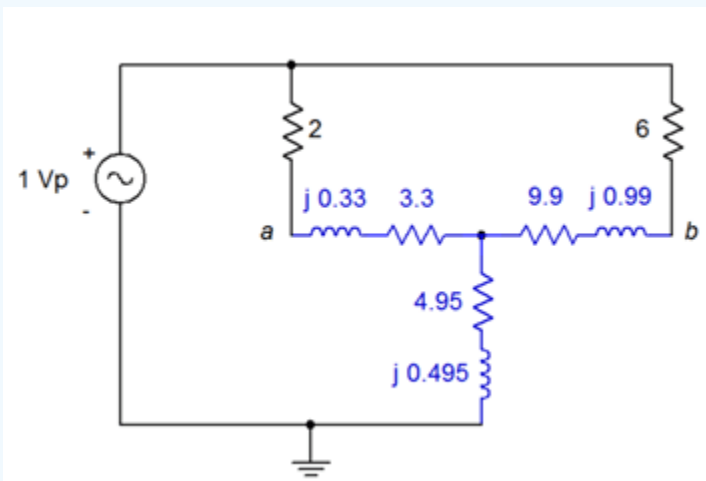

Figure $5.6.7$: Equivalent circuit for the circuit of Figure $5.6.5$.

In this equivalent circuit, v_a is simply the source voltage of $1\angle 0^\circ$ minus the voltage across the 2 Ω resistor. The immediate goal, then, is to find the current through that resistor. This can be achieved via a current divider once the source current is known. To find the source current, we need to find the total impedance of the network. On the upper left side, Z_d is in series with the 2 Ω resistor for a total of $5.3 + j0.33\Omega$. This is in parallel with the upper right side total of $15.9 + j0.99\Omega$.

$$Z_{upper} = \frac{Z_{upperleft} \times Z_{upperright}}{Z_{upperleft} + Z_{upperright}}$$

$$Z_{upper} = \frac{(5.3 + j0.33\Omega) \times (15.9 + j0.99\Omega)}{(5.3 + j0.33\Omega) + (15.9 + j0.99\Omega)}$$

$$Z_{upper} = 3.975 + j0.2475\Omega$$

This is in series with the lower section of $4.95 + j0.495\Omega$ for a total of $8.956\angle 4.76^\circ\Omega$. Using Ohm's law, we find the source current:

$$i_{source} = \frac{E}{Z_{total}}$$

$$i_{source} = \frac{1\angle 0^\circ V}{8.956\angle 4.76^\circ\Omega}$$

$$i_{source} = 0.1117\angle -4.76^\circ A$$

Now for the current divider and also Ohm's law for the 2 Ω resistor.

$$i_{2\Omega} = i_{source}\frac{Z_{upperright}}{Z_{upperright} + Z_{upperleft}}$$

$$i_{2\Omega} = 0.1117\angle -4.76^\circ A\frac{15.9 + j0.99\Omega}{(15.9 + j0.99\Omega) + (5.3 + j0.33\Omega)}$$

$$i_{2\Omega} = 83.7E-3\angle -4.76^\circ A$$

$$v_{2\Omega} = i2\Omega \times R$$

$$v_{2\Omega} = 83.7E-3\angle -4.76^\circ A \times 2\Omega$$

$$v_{2\Omega} = 0.1675\angle -4.76^\circ V$$

Finally, we subtract that potential from the source to find v_a.

$$v_a = E - v_{2\Omega}$$

$$v_a = 1\angle 0^\circ V - 0.1675\angle -4.76^\circ V$$

$$v_a = 0.833\angle 0.95^\circ V$$

References

[1]In some sources the capital Greek letter delta (Δ) is used instead of spelling out “delta” and the letter Y is spelled out as “wye”. Thus, you may come across discussion of “Δ-Y ”, “Δ-wye” or “delta-wye” networks. It's all the same stuff.

[2]This process, though not particularly difficult, is somewhat tedious. It is, as they say, “left as an exercise for the student”.

This page titled 5.6: Delta-Y (Pi-T) Conversions is shared under a CC BY-NC-SA 4.0 license and was authored, remixed, and/or curated by James M. Fiore via source content that was edited to the style and standards of the LibreTexts platform.

5.7: Summary

In this chapter we have examined several techniques and theorems to assist with the analysis of AC electrical circuits. We began with more practical models for voltage and current sources by adding an internal impedance to set limits on the source's maximum output and make it sensitive to output frequency. For a voltage source, this impedance is in series, its ideal value being a short, just as it was for the DC case. For current sources, the impedance is in parallel, its ideal value being an open.

Source conversions allow us to create an equivalent voltage source for any practical current source and vice versa. An equivalent source is one that will create the same voltage across (and current into) the remaining circuit as did the original source. In some cases, this swap allows multiple sources to be combined into a single source, simplifying analysis. If the associated impedance does not have a zero degree phase angle, then the converted source will not be in phase with the original, but will instead be shifted by the impedance angle.

The superposition theorem states that, for any multi-source linear bilateral network, the contributions of each source may be determined independent of all other sources, the final result being the summation of the contributions. This remains true in the AC case, however, care must be taken regarding phase shifts when combining the various contributions. The original circuit of N sources generates N new circuits, one for each source under consideration and with all other sources replaced by their ideal internal impedance.

Thévenin's and Norton's theorems allow the simplification of complex linear single port (i.e., two connecting points) networks. The AC Thévenin equivalent consists of a voltage source with a series impedance while the AC Norton equivalent consists of a current source with a parallel impedance. These impedances can be represented in general as a resistance in series with a reactance, and given an operating frequency, the reactance can be turned into a capacitance or inductance. These equivalents, when replacing the original sub-circuit, will create the same voltage across the remainder of the circuit with the same current draw. In other words, the remainder of the circuit will see no difference between being driven by the original sub-circuit or by either the Thévenin or Norton equivalents.

The maximum power transfer theorem states that for a simple voltage source with an internal impedance driving a simple load, the maximum load power will be achieved when the load impedance equals the complex conjugate of the internal impedance. The complex conjugate has the same real or resistive value, however, the reactive portion is of the opposite sign. This results in a cancellation of the reactive components, leaving just the resistive portions and maximizing load current. At this point, efficiency will be 50%. If the load impedance is higher than the internal impedance, the load power will not be as great, however, the system efficiency may improve, depending on the phase angle.

Delta-Y conversions allow the generation of equivalent “three connection point” impedance networks. RLC networks with three elements in the shape of a triangle or delta (with one connection point at each corner) may be converted into a three element network in the shape of a Y or T, or vice versa. The two versions will behave identically to the remainder of the circuit. This allows the simplification of some circuits and eases analysis.

Review Questions

1. What are the ideal internal impedances of AC voltage and current sources?

2. Outline the process of converting an AC voltage source into an AC current source, and vice versa.

3. In general, describe the process of using superposition to analyze a multisource circuit.

4. What do Thévenin's and Norton's theorems state? How are they related?

5. What are the conditions to achieve maximum power transfer for AC circuits? How does this differ from the DC version?

6. What are delta and Y configurations? How are they related?

This page titled 5.7: Summary is shared under a CC BY-NC-SA 4.0 license and was authored, remixed, and/or curated by James M. Fiore via source content that was edited to the style and standards of the LibreTexts platform.

5.8: Exercises

Analysis

1. For the circuit shown in Figure $5.8.1$, use superposition to find v_b.

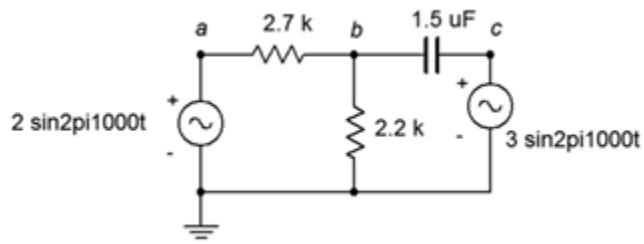

Figure $5.8.1$

2. For the circuit shown in Figure $5.8.1$, use superposition to find the current through the capacitor.

3. Use superposition to find the current through the 82 Ω resistor. For the circuit shown in Figure $5.8.2$.

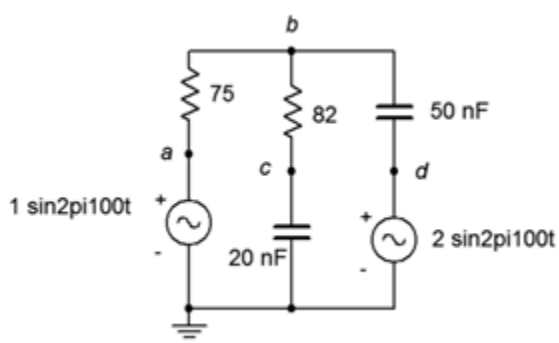

Figure $5.8.2$

4. Use superposition to find v_b and v_{cd} for the circuit shown in Figure $5.8.2$.

5. In the circuit of Figure $5.8.3$, use superposition to find v_b. Source one is one volt peak and source two is two volts peak.

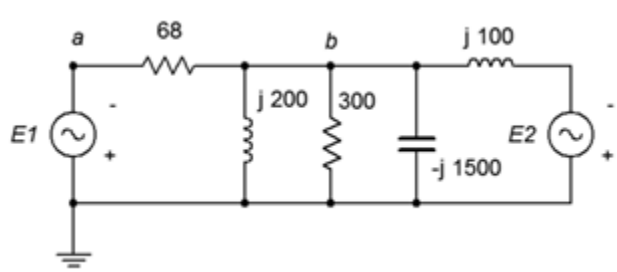

Figure $5.8.3$

6. In the circuit of Figure $5.8.3$, use superposition to find the currents through the two inductors. Source one is two volts peak and source two is three volts peak.

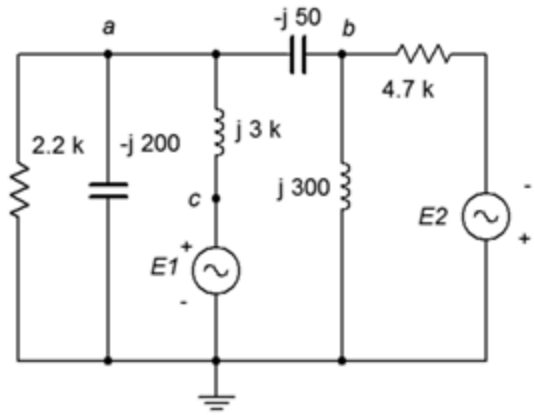

Figure $5.8.4$

7. Use superposition to find the current through the 2.2 kΩ resistor for the circuit of Figure $5.8.4$. $E1 = 1\angle 0^\circ$ and $E2 = 10\angle 90^\circ$.

8. Use superposition to find v_{ab} for In the circuit of Figure $5.8.4$. $E1 = 1\angle 0^\circ$ and $E2 = 2\angle 45^\circ$.

9. In the circuit of Figure $5.8.5$, use superposition to find v_b and v_{cd}. The sources are in phase.

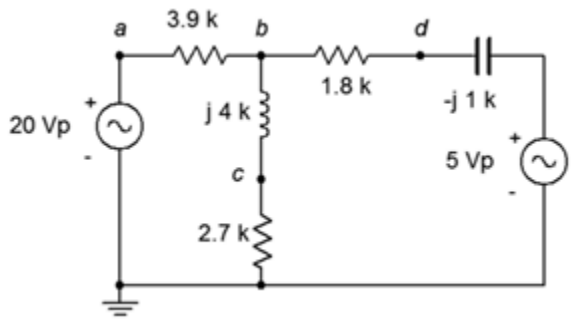

Figure $5.8.5$

10. In the circuit of Figure $5.8.5$, use superposition to find the current through the capacitor. The sources are in phase.

11. Use superposition to find the two source currents for In the circuit of Figure $5.8.6$. Source one is 100 mV peak and source two is 500 mV peak (in phase).

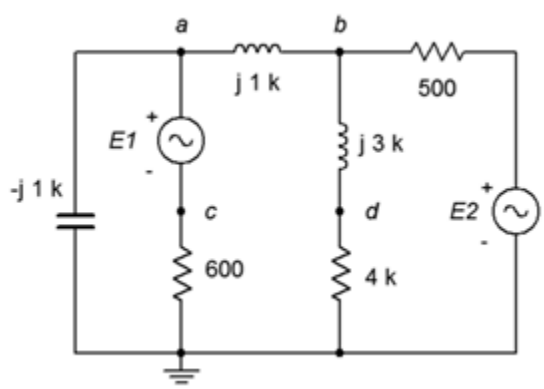

Figure $5.8.6$

12. Use superposition to find v_{cd} for the circuit of Figure $5.8.6$. Source one is 100 mV peak and source two is 1 V peak (in phase).

13. In the circuit of Figure $5.8.7$, use superposition to find v_{ab}.

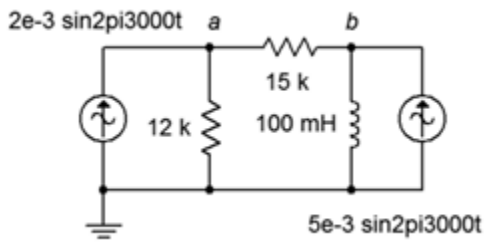

Figure $5.8.7$

14. In the circuit of Figure $5.8.7$, use superposition to find the current through the 15 kΩ resistor.

15. In the circuit of Figure $5.8.8$, use superposition to find v_{ab}.

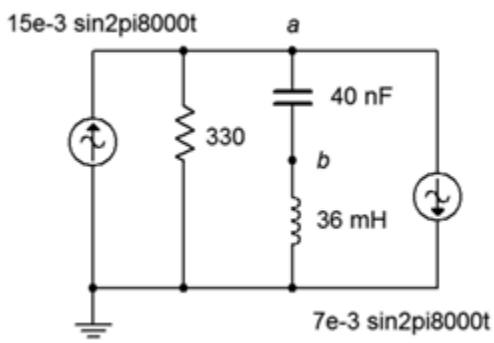

Figure $5.8.8$

16. In the circuit of Figure $5.8.8$, use superposition to find the current flowing through the resistor.

17. For the circuit of Figure $5.8.9$, use superposition to find v_a and v_b. The sources are in phase.

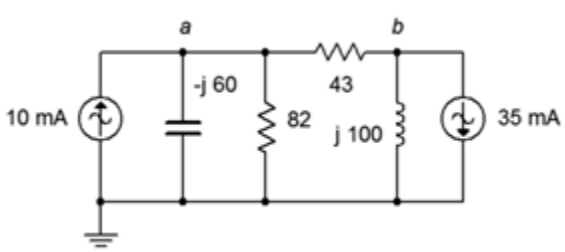

Figure $5.8.9$

18. For the circuit of Figure $5.8.9$, use superposition to find the currents through the inductor and capacitor. The sources are in phase.

19. Use superposition in the circuit of Figure $5.8.10$ to find the currents through the inductor and capacitor. $I1 = 1\angle 45^\circ$ and $I2 = 2\angle 45^\circ$.

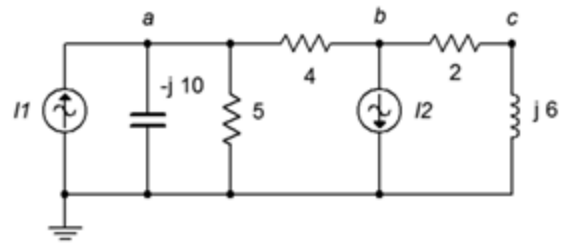

Figure $5.8.10$

20. Use superposition in the circuit of Figure $5.8.10$ to find v_{ab} and v_{bc}. $I1 = 1\angle 0^\circ$ and $I2 = 2\angle 90^\circ$.

21. In the circuit of Figure $5.8.11$, Use superposition to find v_{bc}. $I1 = 10\angle 0^\circ$ and $I2 = 6\angle 0^\circ$.

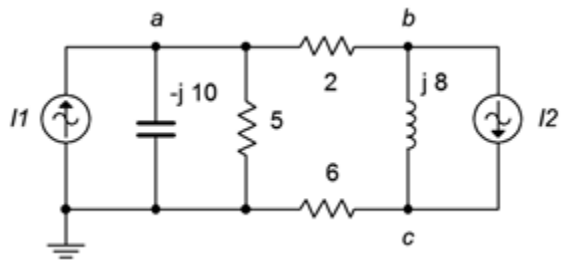

Figure $5.8.11$

22. In the circuit of Figure $5.8.11$, Use superposition to find the current flowing through the 2 Ω resistor. $I1 = 4\angle 120^\circ$ and $I2 = 6\angle 0^\circ$.

23. Use superposition to determine the current of source E in the circuit of Figure $5.8.12$. $E = 40\angle 180^\circ$ and $I = 20E - 3\angle 0^\circ$.

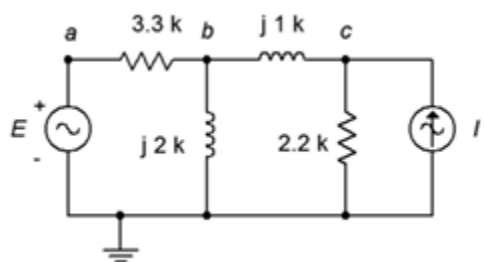

Figure $5.8.12$

24. Use superposition to determine v_{ac} in the circuit of Figure $5.8.12$. $E = 28\angle 0^\circ$ and $I = 8E - 3\angle -180^\circ$.

25. Use superposition to determine vb in the circuit of Figure $5.8.13$. $I = 3E - 3\angle 0^\circ$ and $E = 9\angle 0^\circ$.

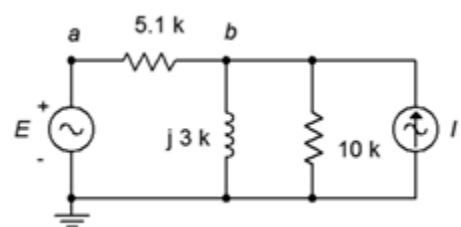

Figure $5.8.13$

26. Use superposition to determine the inductor current in the circuit of Figure $5.8.13$. $I = 4E - 3\angle 0^\circ$ and $E = 18\angle -45^\circ$.

27. For the circuit of Figure $5.8.14$, use superposition to determine the inductor current. $I = 100E - 3\angle 0^\circ$ and $E = 26\angle 0^\circ$.

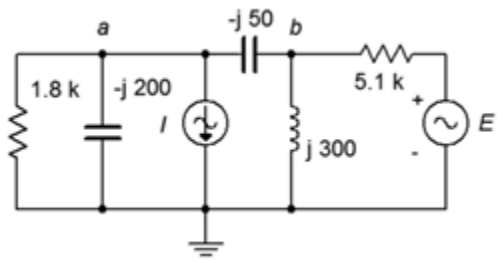

Figure $5.8.14$

28. For the circuit of Figure $5.8.14$, use superposition to determine v_{ab}. $I = 50E - 3\angle 0^\circ$ and $E = 18\angle 90^\circ$.

29. Use superposition to determine v_{ab} in the circuit of Figure $5.8.15$. $I = 10E - 3\angle 0^\circ$ and $E = 12\angle 0^\circ$.

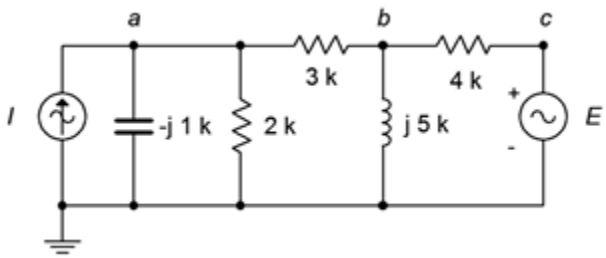

Figure $5.8.15$

30. Use superposition to determine the capacitor current in the circuit of Figure $5.8.15$. $I = 5E - 3\angle 0^\circ$ and $E = 18\angle 120^\circ$.

31. For the circuit of Figure $5.8.16$, determine the Thévenin equivalent that drives the 20 nF capacitor.

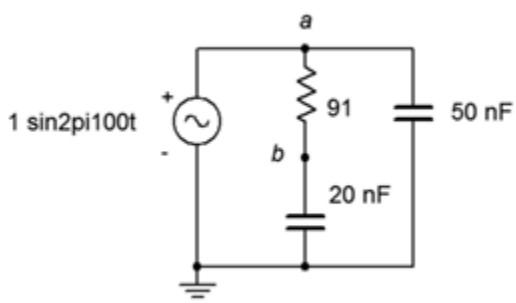

Figure $5.8.16$

32. Given the circuit of Figure $5.8.16$, determine the Norton equivalent that drives the 20 nF capacitor.

33. For the circuit of Figure $5.8.17$, determine the Thévenin and Norton equivalents that drive the 600 Ω resistor if the source $E = 12\angle 0^\circ$.

34. Given the circuit of Figure $5.8.17$, determine the Thévenin equivalent that drives the $j1$ kΩ inductive reactance if $E = 9\angle 0^\circ$.

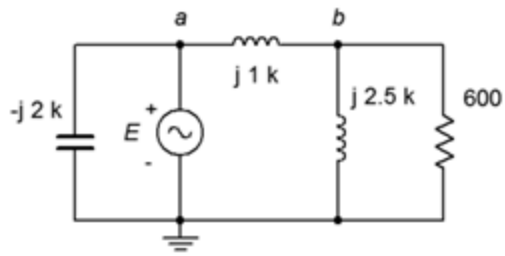

Figure $5.8.17$

35. Given the circuit of Figure $5.8.17$, determine the Norton equivalent that drives the $j2.5$ kΩ inductive reactance if $E = 24\angle 45^\circ$.

36. Use Thévenin's theorem to find v_b in the circuit of Figure $5.8.17$ if $E = 18\angle 0^\circ$.

37. Use Thévenin's theorem to find v_b in the circuit of Figure $5.8.18$.

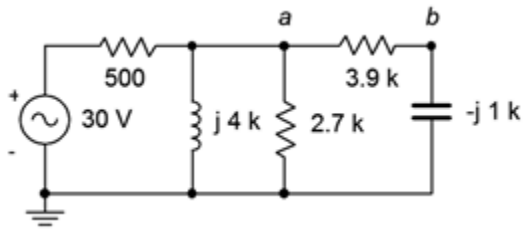

Figure $5.8.18$

38. Determine the Thévenin equivalent that drives the $3.9k\Omega + j1k\Omega$ combo in the circuit of Figure $5.8.18$. Does this combo's impedance achieve maximum load power? If not, what combo will achieve maximum power and what is the resulting power?

39. Determine the Norton equivalent that drives the 500 Ω resistor in the circuit of Figure $5.8.18$. Determine the value of component(s) that when placed in series with the 500 Ω resistor will achieve maximum load power (i.e., for the combo as the load).

40. For the circuit of Figure $5.8.19$, determine the Thévenin and Norton equivalents that drive the combo of $36\Omega + j100\Omega$. Does this combo achieve maximum load power? If not, what combo will achieve maximum power and what is the resulting power?

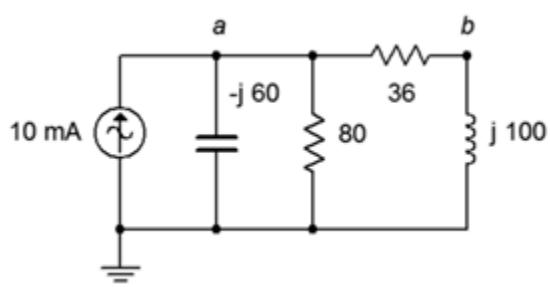

Figure $5.8.19$

41. For the circuit of Figure $5.8.20$, determine the Thévenin and Norton equivalents that drive the combo of 300 Ω in parallel with $-j1500\ \Omega$. Does this combo achieve maximum load power? If not, what combo will achieve maximum power and what is the resulting power? $E = 120\angle 0^\circ$.

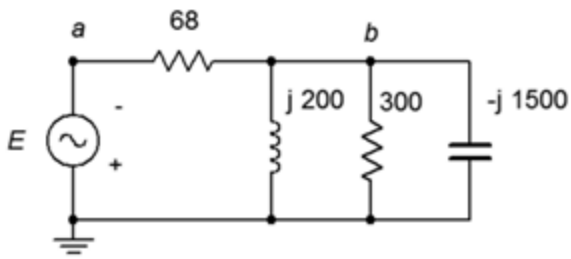

Figure $5.8.20$

42. For the circuit of Figure $5.8.21$, determine the Thévenin and Norton equivalents that drive the combo of 4.7 kΩ in parallel with $j300\ \Omega$. Does this combo achieve maximum load power? If not, what combo will achieve maximum power and what is the resulting power? $I = 200E - 3\angle 0^\circ$.

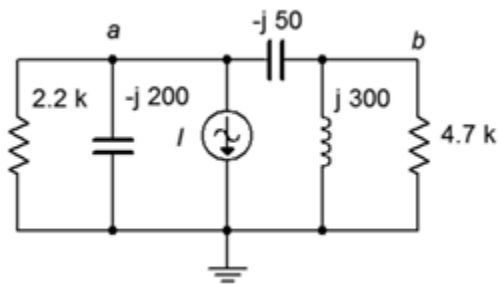

Figure $5.8.21$

43. Determine the equivalent Y (T) network for the circuit of Figure $5.8.22$. $R_1 = R_2 = R_3 = 10k\Omega$ and $X_{L1} = X_{L2} = X_{L3} = j10k\Omega$.

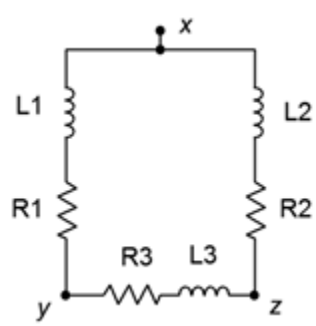

Figure $5.8.22$

44. Determine the equivalent Y (T) network for the circuit of Figure $5.8.23$.

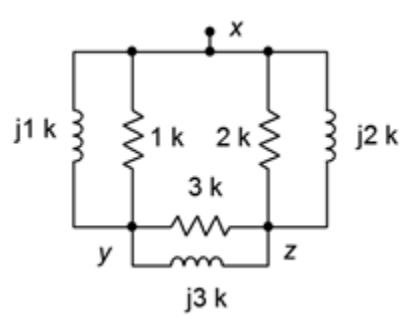

Figure $5.8.23$

45. Determine the equivalent Y (T) network for the circuit of Figure $5.8.24$. $R_1 = R_2 = R_3 = 4k\Omega$ and $X_{C1} = X_{C2} = X_{C3} = -j3k\Omega$.

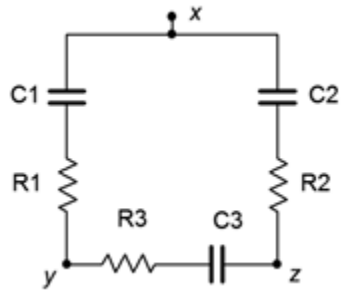

Figure $5.8.24$

46. Determine the equivalent Y (T) network for the circuit of Figure $5.8.25$.

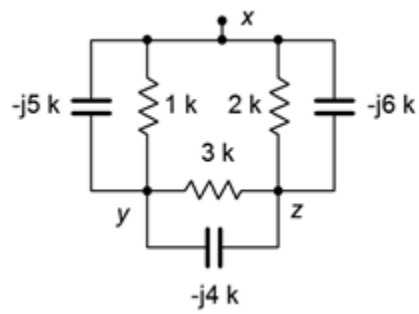

Figure $5.8.25$

47. Determine the equivalent delta (pi) network for the circuit of Figure $5.8.26$.

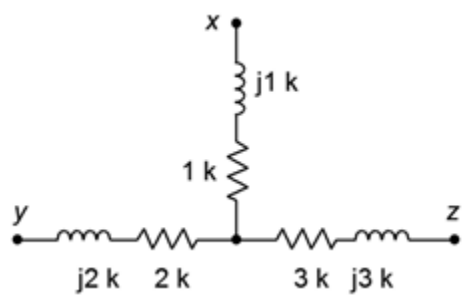

Figure $5.8.26$

48. Determine the equivalent delta (pi) network for the circuit of Figure $5.8.27$.

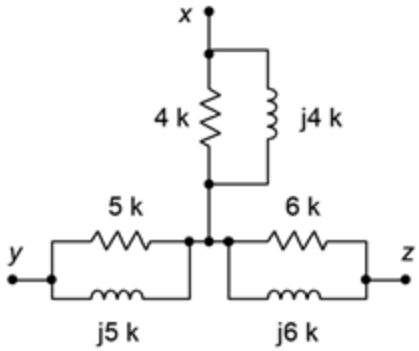

Figure $5.8.27$

49. Determine the equivalent delta (pi) network for the circuit of Figure $5.8.28$.

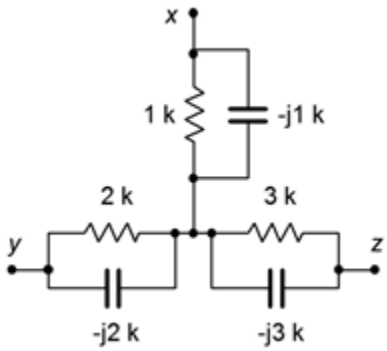

Figure $5.8.28$

50. Determine the equivalent delta (pi) network for the circuit of Figure $5.8.29$.

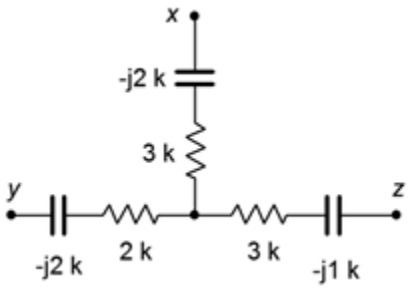

Figure $5.8.29$

51. Find voltage v_{bc} in the circuit of Figure $5.8.30$ through the use of one or more delta-Y conversions. $E = 10\angle 0^\circ$, $R_1 = 1k\Omega$, $R_2 = 2k\Omega$, $R_3 = 3k\Omega$, $X_C = -j4k\Omega$ and $X_L = j8k\Omega$.

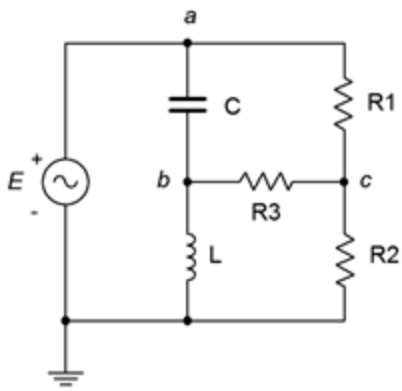

Figure $5.8.30$

52. Find voltage v_{bc} in the circuit of Figure $5.8.31$ through the use of one or more delta-Y conversions. $E = 20\angle 0^\circ$, $R_1 = 1k\Omega$, $R_2 = 8k\Omega$, $R_3 = 3k\Omega$, $X_C = -j4k\Omega$ and $X_L = j2k\Omega$.

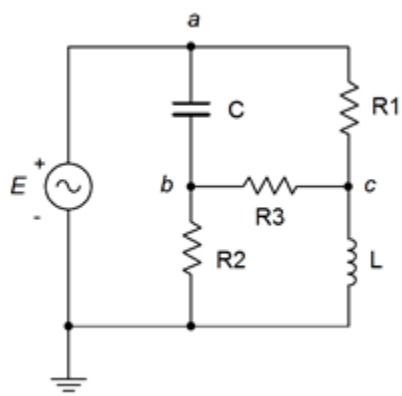

Figure $5.8.31$

Design

53. Design an equivalent current source for Figure $5.8.32$. $E = 12\angle 90^\circ$, $R = 1k\Omega$ and $X_C = -j200\Omega$. The source frequency is 10 kHz.

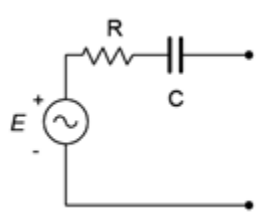

Figure $5.8.32$

54. Design an equivalent current source for Figure $5.8.32$ if $E = 10\angle 0^\circ$, $R = 2.2k\Omega$ and C = 100 nF. The source frequency is 1 kHz.

55. Design an equivalent current source for Figure $5.8.33$ if $E = 1\angle 0^\circ$, R = 600 Ω and L = 2 mH. The source frequency is 20 kHz.

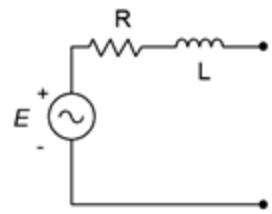

Figure $5.8.33$

56. Design an equivalent current source for Figure $5.8.33$. $E = 2\angle 90^\circ$, R = 10 kΩ and $X_L = j900\Omega$.

57. Design an equivalent voltage source for Figure $5.8.34$. $I = 300E - 3\angle 0^\circ$, $R = 4.3k\Omega$ and $X_C = -j5k\Omega$.

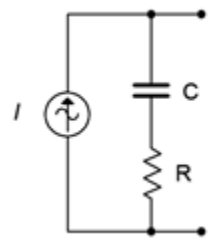

Figure $5.8.34$

58. Design an equivalent voltage source for Figure $5.8.34$ if $I = 100E - 3\angle 120^\circ$, R = 75 Ω and L = 1 mH. The source frequency is 10 kHz.

59. Design an equivalent voltage source for Figure $5.8.35$ if $I = 10E - 3\angle 0^\circ$, R = 9.1 kΩ and L = 5 mH. The source frequency is 100 kHz.

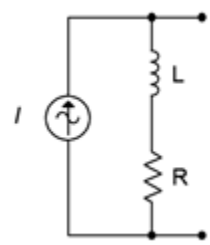

Figure $5.8.35$

60. Design an equivalent voltage source for Figure $5.8.35$ if $I = 50E - 3\angle 0^\circ$, R = 560 Ω and $X_L = j350\Omega$.

61. Reconfigure the circuit of Figure $5.8.36$ so that it uses only voltage sources. Express all new component and source values in terms of the original labels.

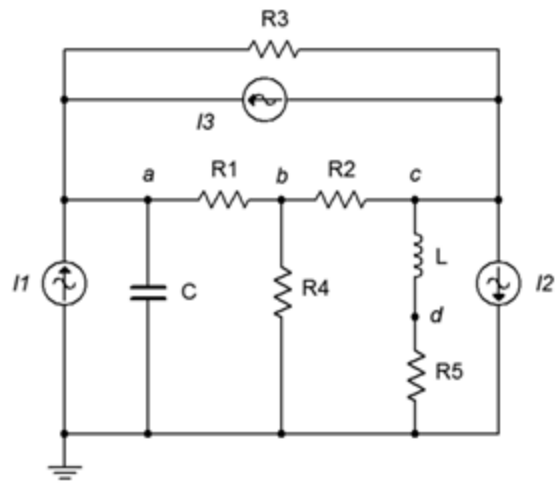

Figure $5.8.36$

62. Reconfigure the circuit of Figure $5.8.37$ so that it uses only current sources. Express all new component and source values in terms of the original labels.

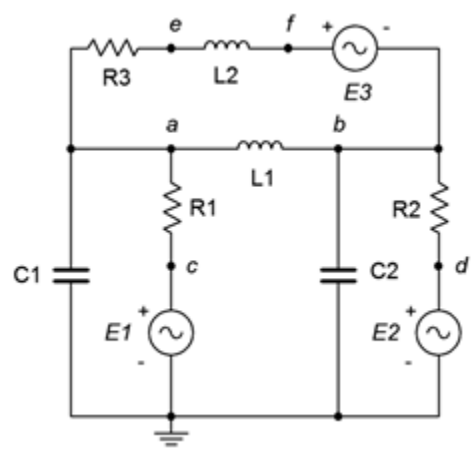

Figure $5.8.37$

63. Redesign the circuit of Figure $5.8.1$ so that it uses only current sources and produces the same node voltages as the original circuit.

64. Consider the 600 Ω resistor to be the load in Figure $5.8.17$. Determine a new value for the load in order to achieve maximum load power. Also determine the maximum load power.

65. Using Thévenin's theorem with the circuit of Figure $5.8.18$, determine a new value of capacitive reactance such that it cancels the Thévenin reactance.

66. Using Norton's theorem with the circuit of Figure $5.8.19$, determine a new value of inductive reactance such that the inductor current is 1 mA in magnitude.

Challenge

67. Redesign the circuit of problem 7 (Figure $5.8.4$) so that it uses only current sources and produces the same node voltages as the original circuit.

68. In the circuit of Figure $5.8.38$, use any method or combination of methods to determine v_{ab}. $I1 = 0.05\angle 0^\circ$, $I2 = 0.1\angle 0^\circ$ and $I3$

$= 0.2\angle 90^\circ$.

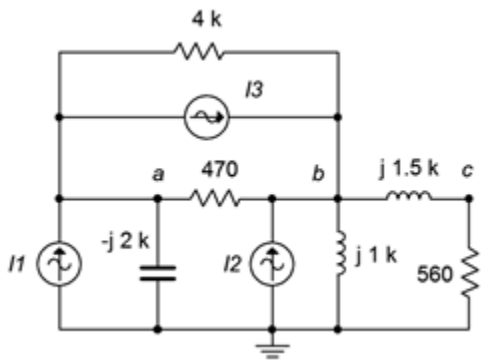

Figure $5.8.38$

69. In the circuit of Figure $5.8.39$, use any method or combination of methods to determine v_{ab}. $E1 = 5\angle 0^\circ$, $E2 = 10\angle 90^\circ$ and $E3 = 15\angle 0^\circ$.

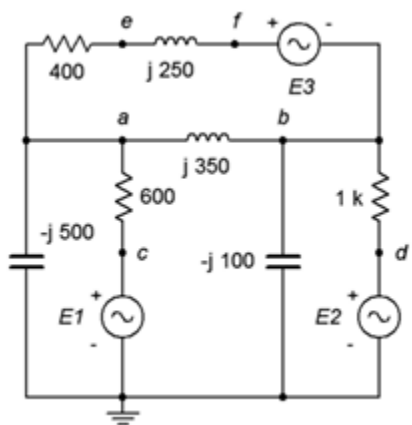

Figure $5.8.39$

70. In the circuit of Figure $5.8.39$, use any method or combination of methods to determine v_{ce}. $E1 = 15\angle 0^\circ$, $E2 = 30\angle 90^\circ$ and $E3 = 45\angle 0^\circ$.

71. Use any method or combination of methods in the circuit of Figure $5.8.40$ to determine v_{ad}. $E1 = 90\angle 0^\circ$, $E2 = 120\angle 0^\circ$ and $I = 400E - 3\angle 180^\circ$.

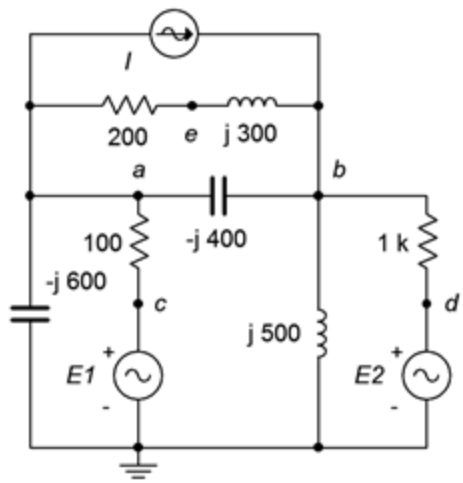

Figure $5.8.40$

72. Consider the $2.7k\Omega + j4k\Omega$ combo to be the load in Figure $5.8.5$. Determine if this value achieves maximum load power. If not, determine a new value for the load in order to achieve maximum load power. Also determine the maximum load power.

73. In the circuit of Figure $5.8.41$, assume the source E is 120 volts RMS at 60 Hz. Determine the value for the load, Z, that will produce maximum load power. Express Z in terms of a resistor and either an inductor or capacitor. Further, specify both the series and parallel equivalents for the load.

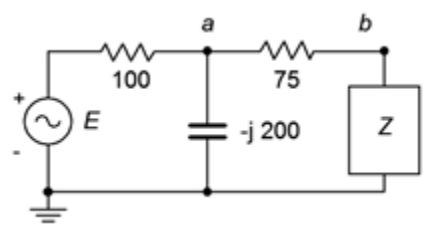

Figure $5.8.41$

74. Convert the circuit of Figure $5.8.42$ into the equivalent delta configuration.

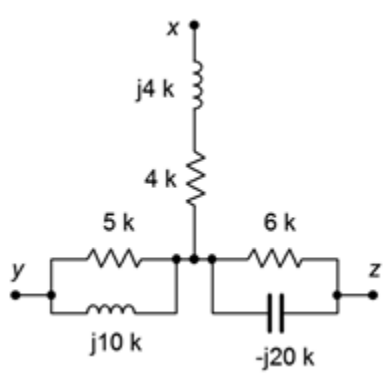

Figure $5.8.42$

75. Find the Thévenin equivalent looking into nodes a and b for the circuit of Figure $5.8.43$. $I = 4\angle 0^\circ$.

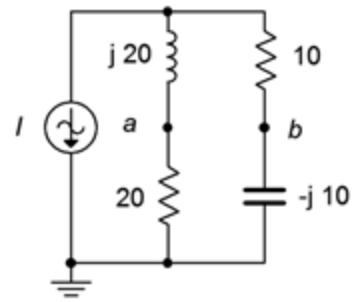

Figure $5.8.43$

76. Find voltage v_{bc} in the circuit of Figure $5.8.44$ through the use of one or more delta-Y conversions. $E = 100\angle 0^\circ$, $R_1 = R2 = 2k\Omega$, $R_3 = 3k\Omega$, $R_4 = 10k\Omega$, $R_5 = 5k\Omega$, $X_{C1} = X_{C2} = -j2k\Omega$.

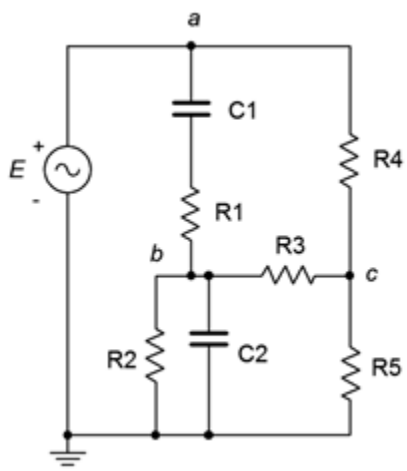

Figure $5.8.44$

77. Given the circuit of Figure $5.8.45$, determine an equivalent circuit using a single voltage source. $E1 = 100\angle 0^\circ$, $E2 = 60\angle 180^\circ$, $E3 = 40\angle 90^\circ$, $E4 = 75\angle 0^\circ$.

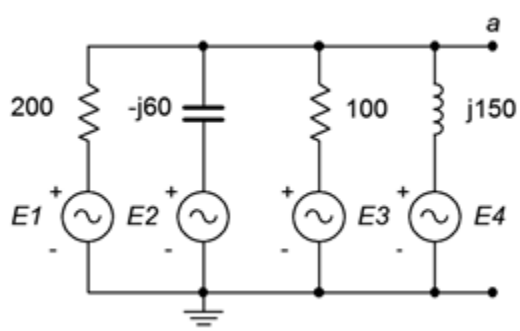

Figure $5.8.45$

78. As mentioned earlier, it is possible that certain AC Y and delta networks cannot be converted. Consider the circuit of Figure $5.8.46$. Can this circuit be converted with a practical outcome? Why/why not?

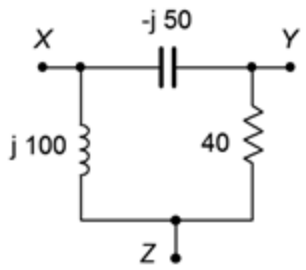

Figure 5.8.46

Simulation

79. Verify the voltage computed for problem 1 by running a transient analysis.

80. Verify the voltage computed for problem 4 by running a transient analysis.

81. Using multiple transient analysis simulations, compare the original circuit of problem 54 to its converted equivalent. Do this by connecting various components to the output terminals, trying several different impedance values and checking to see if the two circuits always produce the same voltage across this impedance.

82. Using multiple transient analysis simulations, compare the original circuit of problem 59 to its converted equivalent. Do this by connecting various components to the output terminals, trying several different impedance values and checking to see if the two circuits always produce the same voltage across this impedance.

83. Run a transient analysis to verify the design of problem 70.

84. Run a transient analysis to verify the design of problem 71.

This page titled 5.8: Exercises is shared under a CC BY-NC-SA 4.0 license and was authored, remixed, and/or curated by James M. Fiore via source content that was edited to the style and standards of the LibreTexts platform.

6: NODAL AND MESH ANALYSIS

Learning Objectives

After completing this chapter, you should be able to:

- Utilize nodal analysis techniques to solve for voltages in multi-source series-parallel RLC networks.
- Utilize mesh analysis techniques to solve for currents in multi-source series-parallel RLC networks.
- Analyze networks that use dependent voltage and/or current sources.

6.1: Introduction

6.2: Nodal Analysis

6.3: Mesh Analysis

6.4: Dependent Sources

6.5: Summary

6.6: Exercises

This page titled 6: Nodal and Mesh Analysis is shared under a CC BY-NC-SA 4.0 license and was authored, remixed, and/or curated by James M. Fiore via source content that was edited to the style and standards of the LibreTexts platform.

6.1: Introduction

This chapter presents methods for the analysis of AC circuits that employ resistors, capacitors and inductors along with any number of voltage and/or current sources. The methods of interest are nodal analysis and mesh analysis. Nodal analysis is the most general technique and can be applied to virtually any circuit. Mesh analysis is nearly as versatile and works well if only voltage sources are present. Both analysis methods generate a system of simultaneous linear equations that are used to solve the circuit for desired voltages or currents. That is, the system generates a set of values, either currents or node voltages, rather than individual currents or voltages. There are several methods that can be used to solve the simultaneous equations. These include substitution, Gauss-Jordan elimination and expansion by minors. These methods are reviewed in Appendix B and are not covered in this chapter. Instead, to focus on the circuit analysis aspects with minimal distraction, the explanations and examples will simply detail the process of examining the circuit and developing the system of equations. The specific technique employed to solve these simultaneous equations depends solely on your personal preferences.

At this point in the study of AC circuits, it is particularly efficient to obtain an advanced scientific calculator that can solve the system of equations directly versus working through the solution manually. By doing so, you can spend your time more effectively; meaning, mastering the process of circuit analysis and creating the equations. Manual solution techniques, though not necessarily difficult, can be tedious, time consuming and error prone. Indeed, on larger circuits, there can be a 10:1 differential in time when using a capable calculator versus a standard scientific calculator[1]. If you have not already done so, you should consider obtaining a calculator that can solve simultaneous equations with complex coefficients (i.e., the complex real/imaginary quantities we have been using). Such calculators can be expensive when purchased new, such as the Texas Instruments TI-89 and Nspire models. On the used market, perfectly satisfactory older models such as the TI-85 and TI-86 can be found at considerable discount. Another model to consider is the Casio FX-9750GII, although it is not quite as powerful as some of the other units mentioned.

Along with nodal and mesh, we shall also introduce the concept of dependent AC sources. Dependent sources do not exhibit a fixed value, but rather the current or voltage is dependent on some other current or voltage in the circuit. What makes this interesting is that this controlling current or voltage may itself be affected by the value produced by the dependent source. Dependent sources are not lab instruments, like signal or function generators. Instead, they are used to model the behavior of active electronic devices such as bipolar and field effect transistors. Mastering the analysis of circuits using dependent sources is critical to the understanding of active circuitry that use transistors and similar devices[2].

References

[1]That's like doing three times as many problems in one-third the time. We don't often get these kinds of opportunities.

[2]For more on transistors and other semiconductors, see Semiconductor Devices: Theory and Application. Another free OER text by the author.

This page titled 6.1: Introduction is shared under a CC BY-NC-SA 4.0 license and was authored, remixed, and/or curated by James M. Fiore via source content that was edited to the style and standards of the LibreTexts platform.

6.2: Nodal Analysis

Nodal analysis can be considered a universal solution technique as there are no practical circuit configurations that it cannot handle. It does not matter if there are multiple sources or if there are complex configurations that cannot be reduced using series-parallel simplification techniques, nodal analysis can handle them all. Further, nodal analysis tends to “give us what we want”, namely, a set of node voltages for the circuit. Once the node voltages are obtained, finding any branch currents or component powers becomes an almost trivial exercise. Nodal analysis relies on the application of Kirchhoff's current law to create a series of node equations that can be solved for node voltages. These equations are based on Ohm's law and will be of the form $i = v/Z$, or more generally, $i = (1/Z_X) \cdot v_A + (1/Z_Y) \cdot v_B + (1/Z_Z) \cdot v_C \ldots$

We will examine two variations on the theme; first, a general version that can be used with both voltage and current sources, and a second somewhat quicker version that can be used with circuits only driven by current sources.

General Method

Consider the circuit shown in Figure $6.2.1$. We begin by labeling connection nodes. We are interested in identifying current junctions, that is, places where currents can combine or split. These are also known as summing nodes and are circled in blue on the figure. We do not concern ourselves with points where just two components connect without any other connection, such as points a and c. Once the proper nodes are identified, reference current directions are assigned. The reference current directions are chosen arbitrarily and for convenience. They may be the opposite of reality. This is not a problem. If we assign directions that are reversed, we'll simply wind up with a current version of a double negative, and the computed node voltages will work out just fine.

One node is chosen as the reference. This is the point to which all other node voltages are measured against. Typically, the reference node is ground, although it does not have to be.

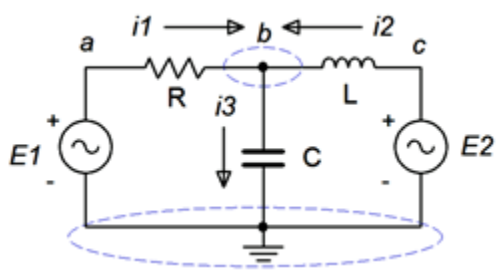

Figure $6.2.1$: A simple dual voltage source circuit with the currents and nodes defined.

We now write a current summation equation for each summing node, except for the reference node. In this circuit there is only one node where currents combine (other than ground) and that's node b. Points a and c are places where components connect, but they are not summing nodes, so we can ignore them for now. Using KCL on node b we can say:

$$i_1 + i_2 = i_3$$

Now we'll describe these currents in terms of the source and node voltages, and associated components. For example, i_3 is the node b voltage divided by $-jX_C$ while i_1 is the voltage across R divided by R. This voltage is $v_a - v_b$.

$$\frac{v_a - v_b}{R} + \frac{v_c - v_b}{jX_L} = \frac{v_b}{-jX_C}$$

Noting that $v_a = E_1$ and $v_c = E_2$, with a little algebra this can be reduced to:

$$\left(\frac{1}{R}\right) E_1 + \left(\frac{1}{jX_L}\right) E_2 = \left(\frac{1}{R} + \frac{1}{jX_L} + \frac{1}{-jX_C}\right) v_b$$

All quantities are known except for v_b and thus it is easily found with a little more algebra. If there had been more nodes, there would have been more equations and more unknowns, one for each node. As we shall see, this conductance-voltage product

format turns out to be a convenient way of writing these equations. Also, note that the first two terms on the left reduce to fixed current values.

For current sources, the process is similar but a bit more direct. Consider the circuit of Figure $6.2.2$. We start as before, identifying nodes and labeling currents. We then write the current summation equations at each node (except for ground). We consider currents entering a node as positive and exiting as negative. There are two nodes of interest here, and thus, two equations each with two unknowns will be generated.

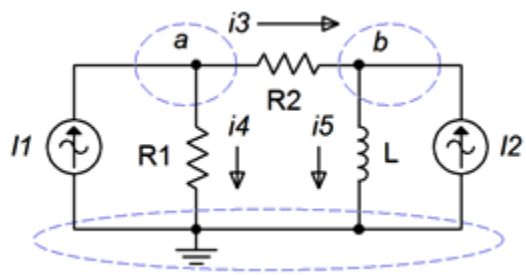

Figure $6.2.2$: A dual current source circuit with the currents and nodes defined.

Node a: $I_1 = i_3 + i_4$

Node b: $i_3 + I_2 = i_5$, and rearranging in terms of the fixed source,

Node b: $I_2 = -i_3 + i_5$

The currents are then described by their Ohm's law equivalents:

Node a: $I_1 = \frac{v_a - v_b}{R_2} + \frac{v_a}{R_1}$

Node b: $I_2 = -\frac{v_a - v_b}{R_2} + \frac{v_b}{jX_L}$

Expanding and collecting terms yields:

Node a: $I_1 = \left(\frac{1}{R_1} + \frac{1}{R_2}\right) v_a - \left(\frac{1}{R_2}\right) v_b$

Node b: $I_2 = -\left(\frac{1}{R_2}\right) v_a + \left(\frac{1}{R_2} + \frac{1}{jX_L}\right) v_b$

As the impedance values and currents are known, simultaneous equation solution techniques may be used to solve for the node voltages. Once again, there are as many equations as node voltages.

One practical point before continuing: It is very important that the coefficients for the various node voltage terms “line up” when the final system of equations is written out. That is, there should be a column for the v_a terms, a column for the v_b terms, and so on. They should not be written out in random order, but rather following the style shown in Figure $6.2.3$. This format will make it much it easier to enter the coefficients into a calculator or solve manually. Further, the set of coefficients must show diagonal symmetry. That is, if we draw a major diagonal from upper-left to lower-right (red), whatever coefficients are above-right from the diagonal should be mirrored below-left of the diagonal (blue, purple, green). If the set of values does not show diagonal symmetry, an error has been made. You must go back and recheck the original node summations. Simple as that. Even the simple 2x2 of Figure $6.2.2$ shows this symmetry (namely, the coefficient of $-1/R_2$ for v_b in the first equation and v_a in the second).

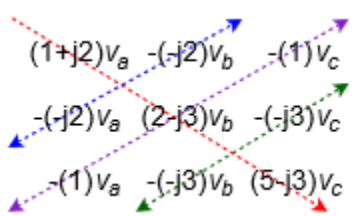

Figure $6.2.3$: Diagonal symmetry.

Example 6.2.1

Determine the voltage across the inductor in the circuit of Figure 6.2.4. Source one is $5\angle 0^\circ$ volts RMS and source two $2\angle 90^\circ$ volts RMS.

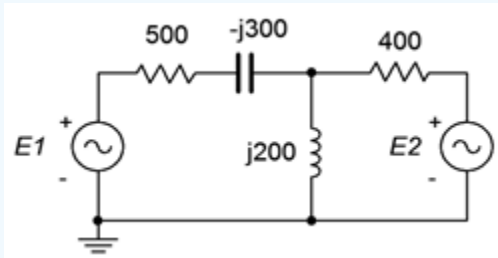

Figure 6.2.4: Circuit for Example 6.2.1.

Other than ground, there is only one current summing node in this circuit, and that's the junction at the top of the inductor. We will refer to this junction as node a. Following the outline of Figure 6.2.1, we define three currents; i_1 entering from the left, i_2 entering from the right, and i_3 exiting down through the inductor.

$$i_1 + i_2 = i_3$$

Next, these currents are described in terms of the voltages and components. We'll number the resistors from left to right.

$$\frac{E_1 - v_a}{R_1 - jX_C} + \frac{E_2 - v_a}{R_2} = \frac{v_a}{jX_L}$$

This can be rearranged as:

$$\left(\frac{1}{R_1 - jX_C}\right) E_1 + \left(\frac{1}{R_2}\right) E_2 = \left(\frac{1}{R_1 - jX_C} + \frac{1}{R_2} + \frac{1}{jX_L}\right) v_a$$

Populate with values:

$$\left(\frac{1}{500 - j300\Omega}\right) 5\angle 0^\circ V + \left(\frac{1}{400\Omega}\right) 2\angle 90^\circ V = \left(\frac{1}{500 - j300\Omega} + \frac{1}{400\Omega} + \frac{1}{j200\Omega}\right) v_a$$

This simplifies to:

$$8.575E - 3\angle 31^\circ A + 5E - 3\angle 90^\circ A = (5.72E - 3\angle -46^\circ S) v_a$$

Solving for the unknown, we find that $v_a = 2.087\angle 98^\circ$ volts RMS.

Example 6.2.2

In the circuit of Figure 6.2.5, determine v_a and v_b. E is $20\angle 0^\circ$ volts peak while I is $0.1\angle 0^\circ$ amps peak. The system frequency is 2 kHz.

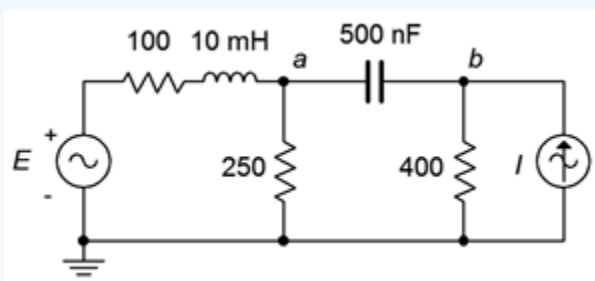

Figure 6.2.5: Circuit for Example 6.2.2.

There are two nodes of interest here, other than ground. This means we will generate two equations with two unknowns (v_a and v_b). Using the standard reactance formulas, the inductive and capacitive reactances are found to be $j125.7\Omega$ and $-j159.2\Omega$, respectively. If we assume the reference direction for current is from node a to node b, and that the current flow through the two center resistors is downward, the equations are:

Node a: $\frac{20\angle 0^\circ V - v_a}{100+j125.7\Omega} = \frac{v_a}{250\Omega} + \frac{v_a - v_b}{-j159.2\Omega}$

Node b: $\frac{v_a - v_b}{-j159.2\Omega} + 0.1\angle 0^\circ A = \frac{v_b}{400\Omega}$

Expanding and collecting terms yields:

Node a: $0.1245\angle -51.5^\circ A = \left(\frac{1}{250\Omega} + \frac{1}{100+j125.7\Omega} + \frac{1}{-j159.2\Omega}\right) v_a - \left(\frac{1}{-j159.2\Omega}\right) v_b$

Node b: $0.1\angle 0^\circ A = -\left(\frac{1}{-j159.2\Omega}\right) v_a + \left(\frac{1}{400\Omega} + \frac{1}{-j159.2\Omega}\right) v_b$

These are simplified, ready for manipulation (note diagonal symmetry).

$$0.1245\angle -51.5^\circ A = (8E-3\angle 10.1^\circ S)v_a - (6.281E-3\angle 90^\circ S)v_b$$

$$0.1\angle 0^\circ A = -(6.281E-3\angle 90^\circ S)v_a + (6.76E-3\angle 68.3^\circ S)v_b$$

After solving the system of equations, we see that $v_a = 16.24\angle 0.09^\circ$ volts and $v_b = 20.99\angle -22.3^\circ$ volts.

Computer Simulation

To verify the results of the preceding example, the circuit of Figure $6.2.5$ is captured in a simulator as shown in Figure $6.2.6$.

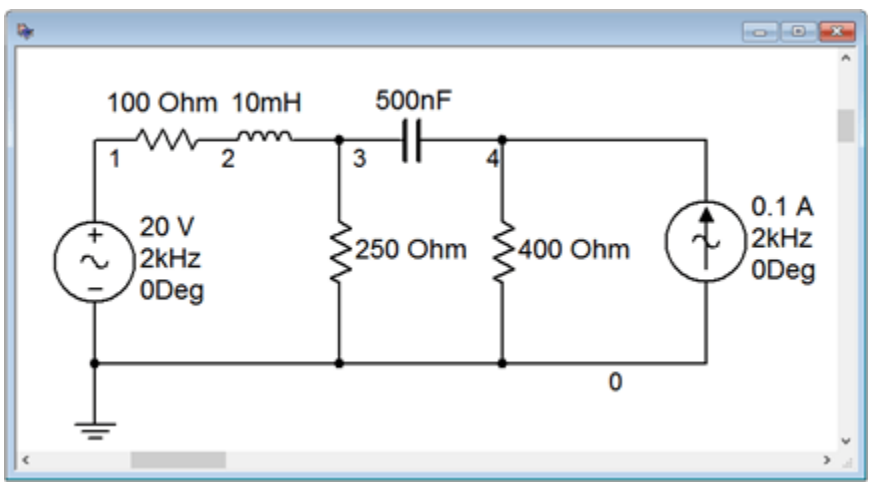

Figure $6.2.6$: The circuit of Example $6.2.2$.

A transient analysis is performed on the circuit. Node voltages 1, 3 and 4 are plotted, corresponding to the voltage source and nodes a and b, respectively, in Figure $6.2.7$.

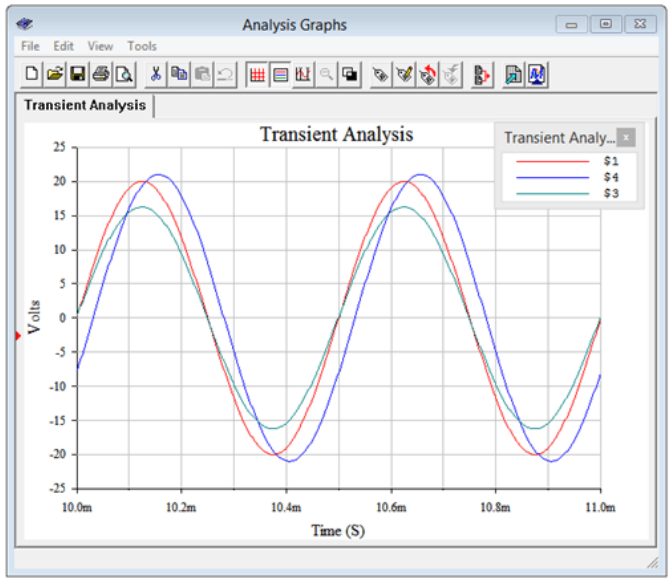

Figure 6.2.7: Simulation results for the circuit of Figure 6.2.6.

The amplitudes are just as computed. Node voltage a appears to be nearly in phase with the voltage source, as expected. Node voltage b lags the source by between one-quarter to one-third of a division, or some 30 microseconds. For a 2 kHz source, this translates to around –22 degrees, verifying the calculated result.

Example 6.2.3

For the circuit of Figure 6.2.8, find v_a and v_b. The system frequency is 1 kHz. $I_1 = 2.5\angle 0^\circ$ A and $I_2 = 1\angle 0^\circ$ A.

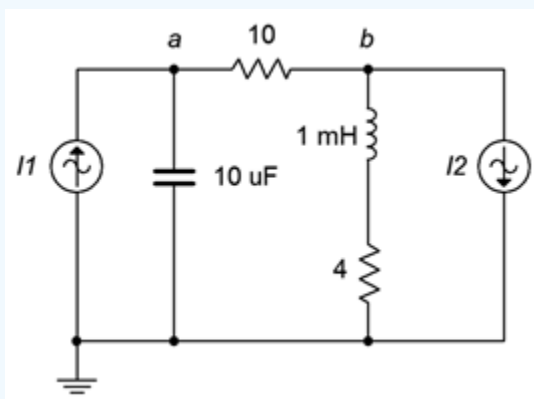

Figure 6.2.8: Circuit for Example 6.2.3.

We will generate two equations with two unknowns, v_a and v_b. The reactance formulas yield $j6.28\Omega$ and $-j15.9\Omega$ for the inductor and capacitor. If we assume the reference direction for current is from node a to node b, and that the current flow through the capacitor and inductor is from nodes a and b downward, the equations are:

Node a: $2.5\angle 0^\circ A = \frac{v_a}{-j15.9\Omega} + \frac{v_a - v_b}{10\Omega}$

Node b: $\frac{v_a - v_b}{10\Omega} = 1\angle 0^\circ A + \frac{v_b}{4 + j6.28\Omega}$

Expanding and collecting terms yields (note diagonal symmetry):

$$2.5\angle 0^\circ A = \left(\frac{1}{10\Omega} + \frac{1}{-j15.9\Omega}\right) v_a - \left(\frac{1}{10\Omega}\right) v_b$$

$$-1\angle 0^\circ A = -\left(\frac{1}{10\Omega}\right)v_a + \left(\frac{1}{10\Omega} + \frac{1}{4+j6.28\Omega}\right)v_b$$

$$2.5\angle 0^\circ A = (0.118\angle 32.2^\circ S)v_a - (0.1\angle 0^\circ S)v_b$$

$$-1\angle 0^\circ A = -(0.1\angle 0^\circ S)v_a + (0.206\angle -33.3^\circ S)v_b$$

The results are: $v_a = 30.39\angle -38.7^\circ$ volts and $v_b = 11.37\angle -20.8^\circ$ volts.

Computer Simulation

To verify the results of the preceding example, the circuit of Figure $6.2.8$ is captured in a simulator as shown in Figure $6.2.9$.

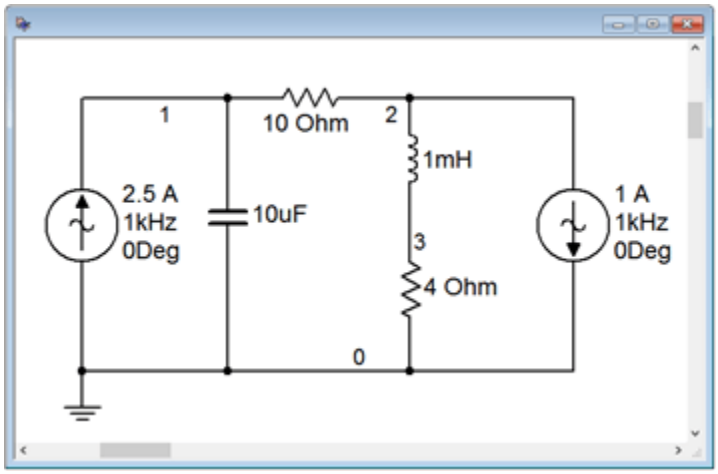

Figure $6.2.9$: The circuit of Example $6.2.3$ captured in a simulator.

A transient analysis is performed on the circuit. Node voltages 1 and 2 (i.e., nodes a and b, respectively) are plotted in Figure $6.2.10$.

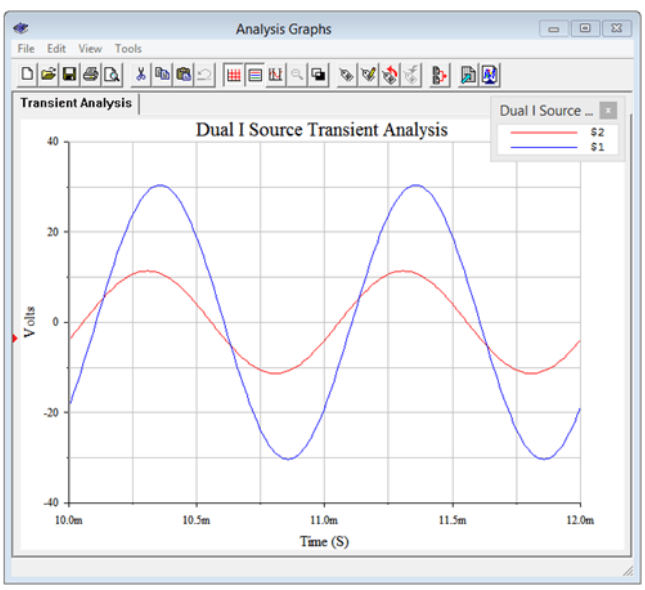

Figure $6.2.10$: Simulation results for the circuit of Figure $6.2.9$.

The simulation results agree nicely with the computed values in terms of both amplitude and phase.

Inspection Method

The system of equations can be obtained directly through inspection if the circuit contains current sources and no voltage sources. Let's take another look at the equations developed in the preceding example. For convenience, the circuit is reproduced in Figure $6.2.11$ with reactance values. $I_1 = 2.5\angle 0^\circ$ A and $I_2 = 1\angle 0^\circ$ A.

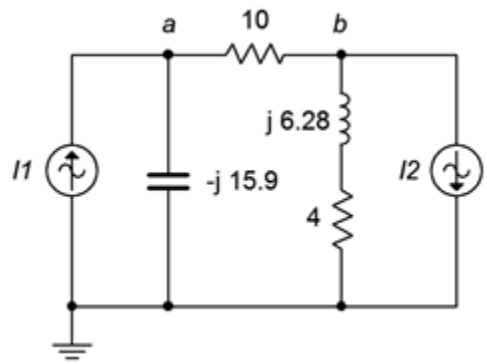

Figure $6.2.11$: Circuit of Example $6.2.3$ with reactances.

$$2.5\angle 0^\circ A = \left(\frac{1}{10\Omega} + \frac{1}{-j15.9\Omega}\right) v_a - \left(\frac{1}{10\Omega}\right) v_b$$

$$-1\angle 0^\circ A = -\left(\frac{1}{10\Omega}\right) v_a + \left(\frac{1}{10\Omega} + \frac{1}{4 + j6.28\Omega}\right) v_b$$

The top equation was built around a current summation at node a while the bottom was built around a summation at node b. The first thing that might be apparent is that on the left of the equals signs are the current sources connected to these nodes. Positive means the current is entering while negative denotes an exiting current. The second thing is that, for the node of interest (node a for the top equation, node b for the bottom), the coefficients represent the items connected to that particular node. For example, in the top equation, the components connected to node a are the 10 Ω resistor and the $-j15.9\Omega$ reactance. Likewise, in the bottom equation, the components connected to node b are the 10 Ω resistor and the $4 + j6.28\Omega$ impedance. The third thing is that the remaining coefficients consist of the components that are in common between the node of interest and the other node (i.e., 10 Ω connects a to b for the first equation, and also connects b to a for the second equation). These other connections always show up as negative. The reason for this should be apparent if you examine the structure of the original equations from Example $6.2.3$.

If there is no bridging element between a node and the node of interest, then that coefficient will be zero. If voltage sources exist in the circuit, source conversions can be used to obtain an equivalent circuit that uses only current sources.

The huge advantage of the inspection method is that it cuts out a time consuming and error prone section of the process, namely converting the original KCL summations into a set of simplified equations with coefficients for each unknown. The inspection method generates the equations directly. To further speed the process, it can be useful to turn each impedance value into a corresponding admittance value before creating the equations. In this way, the reciprocals are computed once for each item rather than multiple times in multiple equations. Finally, remember that the resulting set of equations must exhibit diagonal symmetry, as shown back in Figure $6.2.3$.

The inspection method is summarized as follows:

1. Verify that the circuit uses only current sources and no voltage sources. If voltage sources exist, they must be converted to current sources before proceeding.

2. Find all of the current summing nodes and number (or letter) them. Also decide on the reference node (usually ground).

3. To generate an equation, locate the first node. This is the node of interest and the next few steps will be associated with it.

4. Sum the current sources feeding the node of interest. Entering is deemed positive while exiting is deemed negative. The sum is placed on one side of the equals sign.

5. Next, find all of the impedances connected to the node of interest and write them as a sum of admittances on the other side of the equals sign, the group being multiplied by this node's voltage (e.g., v_1). That makes one term.

6. Now for the other terms. Find all of the admittances that are connected between the node of interest and the next node (e.g., node 2). Sum these together and multiply the group by this other node's voltage (e.g., v_2). Subtract that product from the equation built so far. Repeat this process until all of the other nodes have been examined (except ground). If there are no common impedances between the node of interest and the other node, use zero for the coefficient of that node's voltage. Once all other nodes are considered, this equation is finished.

7. Go to the next node and treat this as the new node of interest.

8. Repeat steps 4 through 7 until all nodes have been treated as the node of interest. Each iteration creates a new equation. There will be as many equations as there are nodes, less the reference node. Check for diagonal symmetry and solve.

The inspection method is best observed in action, and is used in the following example.

Example $6.2.4$

Write the system of equations for the circuit of Figure $6.2.12$. $I_1 = 10\angle 0^\circ$ A and $I_2 = 4\angle 90^\circ$ A.

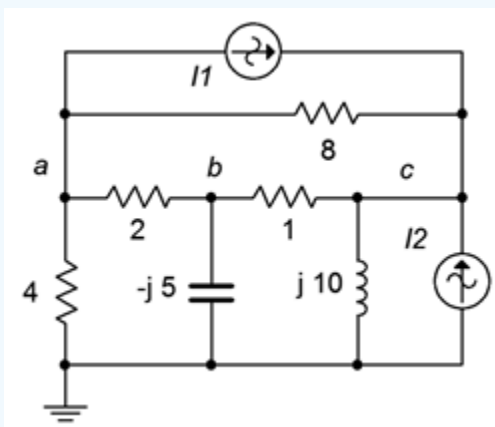

Figure $6.2.12$: Circuit for Example $6.2.4$.

We begin at node a, the first node of interest. Find all of the current sources connected to this node. All we have is I_1. It is exiting, and thus negative.

$$-10\angle 0^\circ A = \ldots$$

Now find all of the items connected to this node and create a sum of admittances.

$$-10\angle 0^\circ A = \left(\frac{1}{4\Omega} + \frac{1}{2\Omega} + \frac{1}{8\Omega}\right) v_a \ldots$$

Include the terms that are common between node a and node b. This is negative.

$$-10\angle 0^\circ A = \left(\frac{1}{4\Omega} + \frac{1}{2\Omega} + \frac{1}{8\Omega}\right) v_a - \left(\frac{1}{2\Omega}\right) v_b \ldots$$

And finally, include the terms common between node a and node c. This is also negative.

$$-10\angle 0^\circ A = \left(\frac{1}{4\Omega} + \frac{1}{2\Omega} + \frac{1}{8\Omega}\right) v_a - \left(\frac{1}{2\Omega}\right) v_b - \left(\frac{1}{8\Omega}\right) v_c$$

The first equation is done. We now make node b the node of interest and repeat the process.

Find all of the current sources connected to this node. There are none.

$$0 = \ldots$$

Find all of the items connected to this node and create a sum of admittances.

$$0 = \cdots + \left(\frac{1}{1\Omega} + \frac{1}{2\Omega} + \frac{1}{-j5\Omega}\right) v_b \ldots$$

Include the terms that are common between node a and node b. This is negative and goes into the lead (a before b) to keep everything nicely lined up.

$$0 = -\left(\frac{1}{2\Omega}\right) v_a + \left(\frac{1}{1\Omega} + \frac{1}{2\Omega} + \frac{1}{-j5\Omega}\right) v_b \ldots$$

Now include the terms common between node b and node c. This is also negative and is inserted at the tail (c after b).

$$0 = -\left(\frac{1}{2\Omega}\right) v_a + \left(\frac{1}{1\Omega} + \frac{1}{2\Omega} + \frac{1}{-j5\Omega}\right) v_b - \left(\frac{1}{1\Omega}\right) v_c$$

The second equation is finished. We now make node c the node of interest and repeat the process for the final time. Find all of the current sources connected to node c. We have both I_1 and I_2 entering.

$$10\angle 0^\circ A + 4\angle 90^\circ A = \ldots$$

This current is equivalent to $10.77\angle 21.8^\circ$. Now find all of the items connected to this node and create a sum of admittances.

$$10.77\angle 21.8^\circ A = \ldots \left(\frac{1}{1\Omega} + \frac{1}{8\Omega} + \frac{1}{j10\Omega}\right) v_c$$

Include the terms that are common between node c and node a. This is negative and goes into the lead (a before c).

$$10.77\angle 21.8^\circ A = -\left(\frac{1}{8\Omega}\right) v_a \cdots + \left(\frac{1}{1\Omega} + \frac{1}{8\Omega} + \frac{1}{j10\Omega}\right) v_c$$

Now include the terms common between node b and node c. This is also negative and is inserted in the middle (b before c).

$$10.77\angle 21.8^\circ A = -\left(\frac{1}{8\Omega}\right) v_a - \left(\frac{1}{1\Omega}\right) v_b + \left(\frac{1}{1\Omega} + \frac{1}{8\Omega} + \frac{1}{j10\Omega}\right) v_c$$

The third and final equation is finished. The completed set of equations is:

$$-10\angle 0^\circ A = \left(\frac{1}{4\Omega} + \frac{1}{2\Omega} + \frac{1}{8\Omega}\right) v_a - \left(\frac{1}{2\Omega}\right) v_b - \left(\frac{1}{8\Omega}\right) v_c$$

$$0 = -\left(\frac{1}{2\Omega}\right) v_a + \left(\frac{1}{1\Omega} + \frac{1}{2\Omega} + \frac{1}{-j5\Omega}\right) v_b - \left(\frac{1}{1\Omega}\right) v_c$$

$$10.77\angle 21.8^\circ A = -\left(\frac{1}{8\Omega}\right) v_a - \left(\frac{1}{1\Omega}\right) v_b + \left(\frac{1}{1\Omega} + \frac{1}{8\Omega} + \frac{1}{j10\Omega}\right) v_c$$

Note that the set exhibits diagonal symmetry and that all coefficient groups are negative except for those along the major diagonal. Consequently, the coefficient groups may now be simplified to obtain single coefficients for the unknowns, and the equations are ready for solution. The results are: $v_a = 10.9\angle 72.8^\circ$ volts, $v_b = 23.6\angle 34.7^\circ$ volts and $v_c = 31.2\angle 37.3^\circ$ volts. These values can be crosschecked by using them to find the currents through each component, and then verifying KCL for each node.

Although this example may appear to be somewhat long winded, with a little practice the process will become second nature. At that point, the set of equations can be created quickly and with little possibility of error, even for large circuits with many nodes.

Using Source Conversions

As mentioned previously, given circuits with voltage sources, it may be easier to convert them to current sources and then apply the inspection technique rather than using the general approach outlined initially. There is one trap to watch out for when using source conversions: the voltage across or current through a converted component will most likely not be the same as the voltage or current in the original circuit. This is because the location of the converted component will have changed. For example, the circuit of Figure $6.2.5$ (Example $6.2.2$) could be solved using the inspection method of nodal analysis by converting the voltage source and its associated impedance of the 100 \Omega resistor in series with the 10 mH inductor into a current source. Although the associated impedance still connects to the converted source, the other end no longer connects to node a. Rather, it would connect to ground. Therefore, the voltage drop across this impedance in the converted circuit is not likely to equal the voltage drop seen across it in the original circuit (the only way they would be equal is if the voltage source E turned out to be 0).

Supernode

From time to time you may see a circuit utilizing an ideal voltage source like the one shown in Figure $6.2.13$. That is, this voltage source does not have a series impedance associated with it. Without that impedance, it becomes impossible to create an expression for the current passing through the source using the general method, and impossible to convert the voltage source into a current source in order to use the inspection method. There are a few of ways out of this quandary. The first way is to recognize that all realistic sources have some internal impedance, so we simply add a very small resistor in series with the source so that a source conversion is possible. Of course, not just any resistor will do. In order to maintain accuracy, the newly added resistance has to be much smaller than any surrounding resistances or reactances. A reduction by two orders of magnitude generally yields a variation smaller than that produced by component tolerances in all but high precision circuits and will usually do the trick. Still smaller values will further increase accuracy. Another way out is to use a supernode.

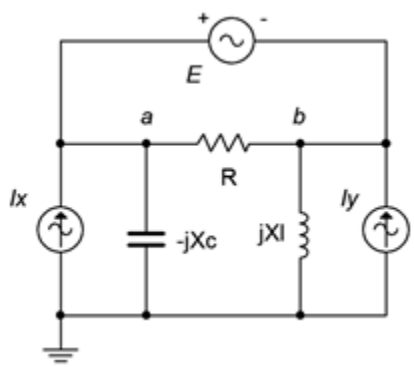

Figure $6.2.13$: Bridging voltage source without an internal impedance.

A supernode is, in effect, the combination of two nodes. It relies on a simple observation. If we examine the circuit of Figure $6.2.13$, the path of the voltage source produces identical currents flowing into and out of nodes a and b. As a consequence, if we treat the two nodes as one big node, then when we write a KCL summation, these two terms will cancel. To see just how this works, refer to Figure $6.2.14$.

In this version we have replaced the voltage source with its ideal internal impedance; a short. We have also labeled the two nodes of interest, a and b, and labeled the currents, drawn with convenient reference directions. The specific choice of direction will not matter, just use whatever scheme seems appropriate.

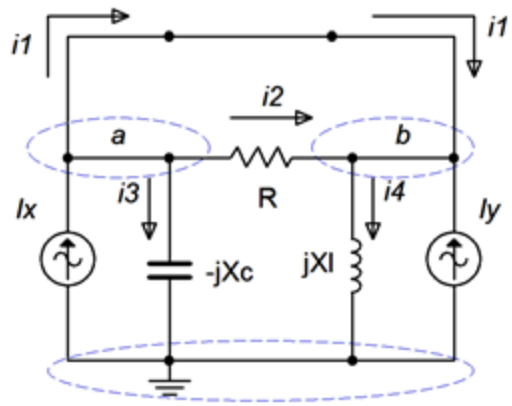

Figure $6.2.14$: Circuit modified for supernode analysis.

Due to the shorted voltage source, nodes a and b are now the same node. Take a look at the currents entering and exiting this combined "super" node. On the left side (formerly node a) we see a constant current I_x entering while i_1, i_2 and i_3 are exiting. On the right side (formerly node b) we see the I_y entering along with i_1 and i_2, and exiting we see i_4. At this point we'll create an expression where all of currents entering the super node are on the left side of the equals sign and all of the exiting currents are on the right:

$$\sum i_{in} = \sum i_{out}$$

$$I_x + I_y + i_1 + i_2 = i_1 + i_2 + i_3 + i_4$$

This can be simplified to:

$$I_x + I_y = i_3 + i_4$$

Writing this in terms of Ohm's law we have:

$$I_x + I_y = \frac{1}{-jX_C} v_a + \frac{1}{jX_L} v_b$$

We also know that $v_a - v_b = E$ from the original circuit. We know this because the reference polarity of the source is + toward the a node and – toward the b node. Therefore it must be $v_a - v_b$ and not $v_b - v_a$. Assuming all sources and components are known, that makes two equations with two unknowns, solvable using simultaneous equation techniques. This is illustrated in the following example.

Example $6.2.5$

Find v_a and v_b for the circuit of Figure $6.2.15$. $E = 16\angle 0^\circ$ volts, $I_x = 0.1\angle 0^\circ$ amps and $I_y = 0.25\angle 90^\circ$ amps.

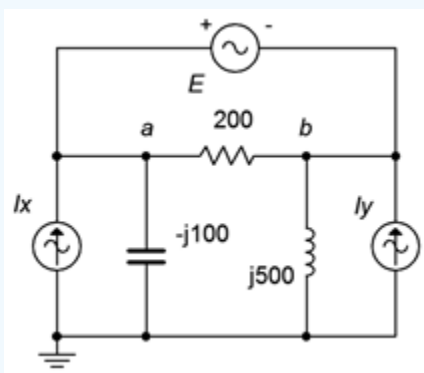

Figure $6.2.15$: Circuit for Example $6.2.5$.

The circuit is redrawn in Figure $6.2.16$ with nodes and currents labeled. We short the 16 volt source and write a current summation at the $a:b$ supernode:

$$\sum i_{in} = \sum i_{out}$$

$$0.1\angle 0^\circ A + 0.25\angle 90^\circ A + i_1 + i_2 = i_1 + i_2 + i_3 + i_4$$

This can be simplified to:

$$0.2693\angle 68.2^\circ A = i_3 + i_4$$

Writing this in terms of Ohm's law we have:

$$0.2693\angle 68.2^\circ A = \frac{1}{-j100\Omega} v_a + \frac{1}{j500\Omega} v_b$$

$$0.2693\angle 68.2^\circ A = j10mSv_a - j2mSv_b$$

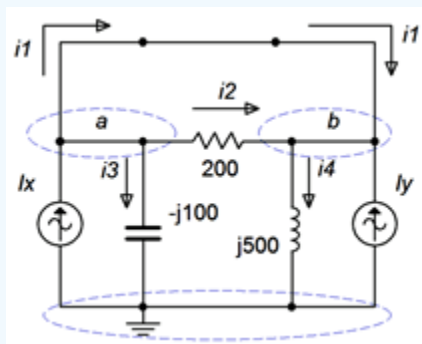

Figure $6.2.16$: Circuit modified for supernode analysis.

We also know that $v_a - v_b = 16\angle 0^\circ$ volts. Therefore $v_b = v_a - 16\angle 0^\circ$ volts. Substituting this into the prior equation yields:

$$0.2693\angle 68.2^\circ A = j10mSv_a - j2mS(v_a - 16\angle 0^\circ V)$$

$$0.2693\angle 68.2^\circ A = j10mSv_a - j2mSv_a + 32E - 3\angle 90^\circ A$$

$$0.2394\angle 67.9^\circ A = j8mSv_a$$

$$v_a = 29.92\angle -22.1^\circ V$$

We know that v_b is $16\angle 0^\circ$ volts below v_a, and thus after subtracting, we find $v_b = 16.24\angle -43.8^\circ$ volts.

To verify, we will perform a KCL summation at each node. For node a, assuming i_1 exits as drawn:

$$i_1 = 0.1\angle 0^\circ A - \frac{v_a}{-j100\Omega} - \frac{v_a - v_b}{200\Omega}$$

$$i_1 = 0.1\angle 0^\circ A - \frac{29.92\angle -22.1^\circ V}{-j100\Omega} - \frac{29.92\angle -22.1^\circ V - 16.24\angle -43.8^\circ V}{200\Omega}$$

$$i_1 = 0.292\angle -108^\circ A$$

Doing likewise for node b, and assuming i_1 enters as drawn:

$$i_1 = -0.25\angle 90^\circ A + \frac{v_b}{j500\Omega} - \frac{v_a - v_b}{20\Omega}$$

$$i_1 = -0.25\angle 90^\circ A + \frac{16.24\angle -43.8^\circ V}{j500\Omega} - \frac{29.92\angle -22.1^\circ V - 16.24\angle -43.8^\circ V}{200\Omega}$$

$$i_1 = 0.292\angle -110^\circ A$$

Other than the small deviation due to accumulated rounding, these currents match. That means that the current through the voltage source is verified to be the same at both terminals, as it must be.

An alternative to the basic supernode technique is to recognize that the two nodes on either side of the voltage source are effectively locked together by the source voltage. That is, if one of the node voltages is found, then the other may be determined by adding or subtracting the source voltage to or from the known node voltage, depending on the reference polarity. This idea is exploited by simply describing one node voltage in terms of the other at the outset. This will reduce the total number of unknowns by one and reduce the system of equations by one. The technique is illustrated in the example following.

Example $6.2.6$

Find node voltages v_a, v_b and v_c for the circuit of Figure $6.2.17$. The sources are: $E = 20\angle 0^\circ$ volts and $I = 2\angle 45^\circ$ amps.

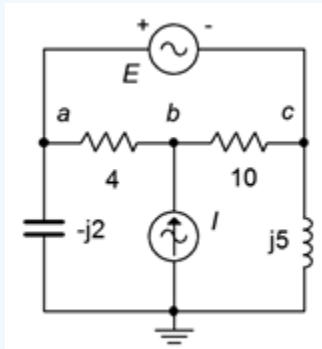

Figure $6.2.17$: Circuit for Example $6.2.6$.

Once again we have a situation of a voltage source lacking a series impedance which makes a source conversion impossible. Without having to short it and thus treating nodes a and c as an explicit supernode, we can take an alternate route. We begin by noting that the currents entering and exiting the voltage source must be identical.

The circuit is redrawn in Figure $6.2.18$ with the nodes and convenient current directions labeled. The circuit also uses equivalent conductances and susceptances in place of the original resistances and reactances in order to speed the process of simplifying the equations. Unlike the basic supernode technique, this time the voltage source is left in.

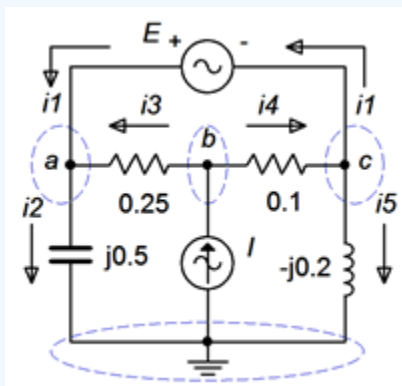

Figure $6.2.18$: Circuit of Example $6.2.6$ with currents labeled and using conductances.

The key observation is that $v_c = v_a - 20\angle 0^\circ$ V. In other words, v_c is locked to v_a and if we find one of them, we can determine the other. Therefore, instead of writing three equations using three unknowns, we shall instead refer to node c in reference to node a. In other words, wherever we need v_c we instead shall write $v_a - 20\angle 0^\circ$ V. Thus, this three node circuit will only need two equations.

We begin at node a and apply KCL as usual.

$$\sum i_{in} = \sum i_{out}$$

$$i_1 + i_3 = i_2$$

This is expanded using Ohm's law and we solve for i_1:

$$i_1 = i_2 - i_3$$

$$i_1 = j0.5Sv_a - 0.25S(v_b - v_a)$$

$$i_1 = (0.25 + j0.5)Sv_a - 0.25Sv_b$$

On to node b:

$$I = i_3 + i_4$$

$$2\angle 45^\circ A = 0.25S(v_b - v_a) + 0.1S(v_b - v_c)$$

$$2\angle 45^\circ A = 0.25S(v_b - v_a) + 0.1S(v_b - (v_a - 20\angle 0^\circ V))$$

$$2\angle 45^\circ A = 0.25S(v_b - v_a) + 0.1S(v_b - v_a + 20\angle 0^\circ V)$$

$$2\angle 45^\circ A = 0.25S(v_b - v_a) + 0.1S(v_b - v_a) + 2\angle 0^\circ A$$

$$1.531\angle 112.5^\circ A = -0.35Sv_a + 0.35Sv_b$$

And finally node c:

$$i_4 = i_1 + i_5$$

$$i_1 = i_4 - i_5$$

$$i_1 = 0.1S(v_b - v_c) - (-j0.2S)v_c$$

$$i_1 = 0.1S(v_b - (v_a - 20\angle 0^\circ V)) + j0.2S(v_a - 20\angle 0^\circ V)$$

$$i_1 = 0.1S(v_b - v_a + 20\angle 0^\circ V) + j0.2S(v_a - 20\angle 0^\circ V)$$

$$i_1 = 0.1S(v_b - v_a) + j0.2Sv_a + (2 - j4)A$$

$$i_1 = (-0.1 + j0.2)Sv_a + 0.1Sv_b + 4.472\angle -63.4^\circ A$$

The equations for nodes a and c both equal i_1, thus they equal each other.

$$(0.25 + j0.5)Sv_a - 0.25Sv_b = (-0.1 + j0.2)Sv_a + 0.1Sv_b + 4.472\angle -63.4^\circ A4.472\angle -63.4^\circ A = (0.35 + j0.3)Sv_a - 0.35Sv_b$$

The final equations are:

$$4.472\angle -63.4^\circ A = (0.35 + j0.3)Sv_a - 0.35Sv_b$$

$$1.531\angle 112.5^\circ A = -0.35Sv_a + 0.35Sv_b$$

The solution is $v_a = 9.823\angle -151.3^\circ$ volts and $v_b = 10.31\angle -176.2^\circ$ volts. As v_c is $20\angle 0^\circ$ volts less than v_a, then $v_c = 29\angle -170.6^\circ$ volts. KCL summations at each of the three nodes will verify these values.

This page titled 6.2: Nodal Analysis is shared under a CC BY-NC-SA 4.0 license and was authored, remixed, and/or curated by James M. Fiore via source content that was edited to the style and standards of the LibreTexts platform.

6.3: Mesh Analysis

Mesh analysis is similar to nodal analysis in that it can handle complex multi-source circuits. In some ways it is the mirror image of nodal analysis. While nodal analysis uses Kirchhoff's current law to create a series of current summations at various nodes, mesh analysis uses Kirchhoff's voltage law to create a series of loop equations that can be solved for mesh currents. The current through any particular component may be a mesh current or a combination of mesh currents. Of course, once those currents are found, it is a short hop to find any desired voltage. Mesh does have one limitation that nodal doesn't: Mesh analysis requires that the circuit be planar. That is, the circuit must be able to be drawn on a flat surface without any wires crossing each other. Another way of looking at it is that planar circuits can be drawn to appear as a series of boxes butting up against each other. To get a visceral idea of this notion, grab a piece of paper and place four dots on it. Try to draw a line from each dot to every other dot but without crossing any lines. After a few tries, you should be successful. Now try it with five dots. You can't do it unless you “draw in the air” and hop over other lines. Obviously, that's possible with real circuits because they're 3D. Therefore there are circuits that cannot be solved using mesh.

Consider the circuit of Figure $6.3.1$. This circuit has two voltage sources and cannot be simplified further, although it can be solved using either superposition or nodal analysis. For mesh analysis, we begin by designating a set of current loops. These loops should be minimal in size and together cover all components at least once. By convention, the loops are drawn with a clockwise reference direction. There is nothing magical about them being clockwise, it is just a matter of consistency. The annotated version of the circuit is redrawn in Figure $6.3.2$.

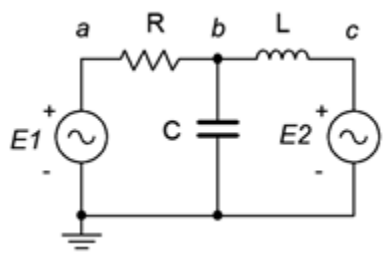

Figure $6.3.1$: A simple two-source circuit.

Here we have two loop currents, i_1 and i_2. Note that all components exist in at least one loop (and sometimes in more than one loop, like capacitor C). Depending on circuit values, one or more of these loop directions may in fact be opposite of reality. This is not a problem. If the true reference direction is opposite, then the currents will show up as negative values, and thus we know that the real reference direction is counterclockwise. Just remember that a positive result means a clockwise direction and negative indicates counterclockwise.

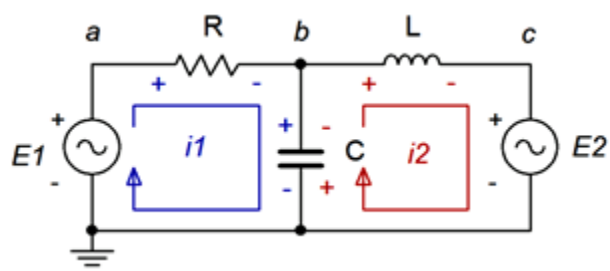

Figure $6.3.2$: Circuit with mesh loops and voltage polarities drawn.

We begin by writing KVL equations for each loop.

Loop 1: E_1 = voltage across R + voltage across X_C

Loop 2: $-E_2$ = voltage across X_C + voltage across X_L

Note that E_2 is negative as i_2 is drawn flowing out of its negative terminal. Now expand the voltage terms using Ohm's law. The resistor and inductor each see a single current, i_1 and i_2, respectively. The capacitor experiences both currents. From the

perspective of loop 1, i_2 is flowing in the opposite direction. Thus, the net current is $i_1 - i_2$. From the perspective of loop 2, i_1 is flowing in the opposing direction and thus the net current is $i_2 - i_1$. The reference voltage polarities reinforce this notion.

Loop 1: $E_1 = i_1 R + (i_1 - i_2)(-jX_C)$

Loop 2: $-E_2 = i_2(jX_L) + (i_2 - i_1)(-jX_C)$

Multiplying out and collecting terms yields:

Loop 1: $E_1 = (R - jX_C)i_1 - (-jX_C)i_2$

Loop 2: $-E_2 = -(-jX_C)i_1 + (jX_L - jX_C)i_2$

As the component values and source voltages are known, we have two equations with two unknowns. These can be solved for i_1 and i_2 using the simultaneous equation solution techniques of your choice.

Example 6.3.1

For the circuit of Figure 6.3.3, determine vb and vc. The sources are: $E_1 = 9\angle 0^\circ$ volts and $E_2 = 12\angle -90^\circ$ volts.

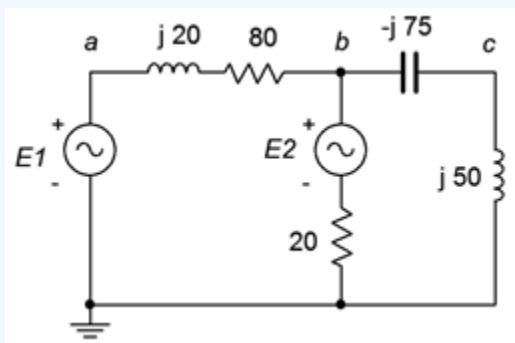

Figure 6.3.3: Circuit for Example 6.3.1.

We begin by labeling our loops, as shown in Figure 6.3.4. Each loop will generate an equation based on a KVL summation around that loop. We will number the components from left to right, as usual.

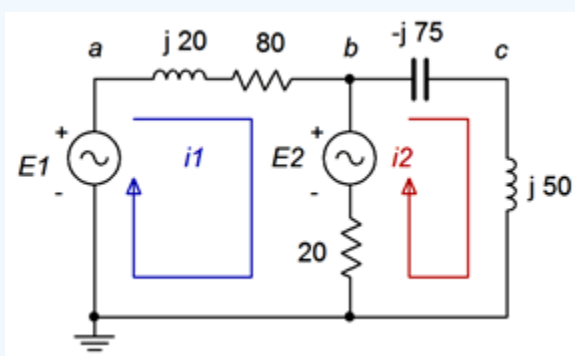

Figure 6.3.4: Circuit of Figure 6.3.3 with current loops drawn.

For loop 1:

$$E_1 - E_2 = (jX_{L1} + R_1)i_1 + R_2(i_1 - i_2)$$

$$E_1 - E_2 = (R_1 + R_2 + jX_{L1})i_1 - R_2 i_2$$

$$9\angle 0^\circ V - 12\angle -90^\circ V = (20 + 80 + j20\Omega)i_1 - 20\Omega i_2$$

$$15\angle 53.1^\circ V = (100 + j20\Omega)i_1 - 20\Omega i_2$$

Repeat for loop 2:

$$E_2 = (-jX_C + jX_{L2})i_2 + R_2(i_2 - i_1)$$

$$E_2 = -R_2 i_1 + (R_2 - jX_C + jX_{L2})i_2$$

$$12\angle -90^\circ V = -20\Omega i_1 + (20 - j75 + j50\Omega)i_2$$

$$12\angle -90^\circ V = -20\Omega i_1 + (20 - j25\Omega)i_2$$

The two loop equations are:

$$15\angle 53.1^\circ V = (100 + j20\Omega)i_1 - 20\Omega i_2$$

$$12\angle -90^\circ V = -20\Omega i_1 + (20 - j25\Omega)i_2$$

The equations show diagonal symmetry. The currents are $i_1 = 0.1785\angle 19.9^\circ$ amps and $i_2 = 0.3529\angle -21.4^\circ$ amps. To find the voltages v_b and v_c, we just need to apply Ohm's law. The voltage v_c is the potential across the $j50\Omega$ inductor.

$$v_c = i_2 \times jX_{L2}$$

$$v_c = 0.3529\angle -21.4^\circ A \times j50\Omega$$

$$v_c = 17.64\angle 68.6^\circ V$$

The potential v_b is found similarly.

$$v_b = i_2 \times (-jX_C + jX_{L2})$$

$$v_b = 0.3529\angle -21.4^\circ \times (-j75\Omega + j50\Omega)$$

$$v_b = 8.823\angle -111.4^\circ V$$

For verification, we can also find v_b by subtracting the voltage developed across the series inductor/resistor pair from the first source.

$$v_b = E_1 - i_1 \times (R_1 + jX_{L1})$$

$$v_b = 9\angle 0^\circ V - 0.1785\angle 19.9^\circ A \times (80 + j20\Omega)$$

$$v_b = 8.823\angle -111.4^\circ V$$

Example $6.3.2$

In the circuit of Figure $6.3.5$, find v_b. $E = 10\angle 0^\circ$ volts peak at a frequency of 10 kHz.

The circuit is a bridge network. Even though it has only a single voltage source, basic series-parallel techniques will not work here. Nodal analysis can also work here as can delta-Y conversion, however, mesh is an excellent choice for this layout.

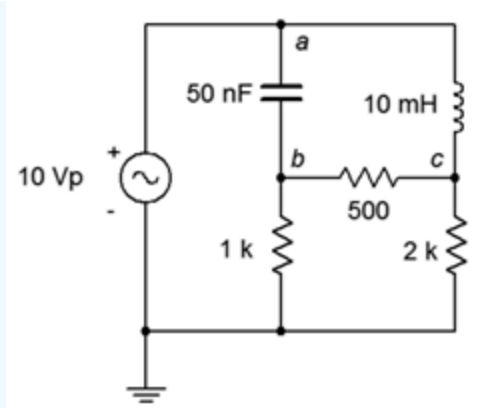

Figure 6.3.5: Circuit for Example 6.3.2.

We start by finding the reactance values. Using the standard reactance formulas we find that $X_L = j628.3\Omega$ and $X_C = -j318.3\Omega$. After substituting these into the original circuit and defining the loops, we have Figure 6.3.6.

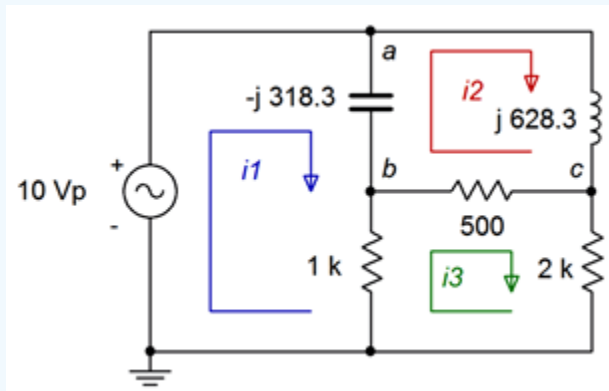

Figure 6.3.6: Circuit of Figure 6.3.5 with reactance values and current loops drawn.

We have three loops with three unknown currents, and therefore three equations. We'll number the resistors from left to right. For loop 1:

$$E = v_C + v_{R1}$$

$$E = -jX_C(i_1 - i_2) + R_1(i_1 - i_3)$$

$$E = (R_1 - jX_C)i_1 - (-jX_C)i_2 - R_1 i_3$$

$$10\angle 0^\circ V = (1k\Omega - j318.3\Omega)i_1 + j318.3\Omega i_2 - 1k\Omega i_3$$

For loop 2:

$$0 = v_C + v_L + v_{R2}$$

$$0 = -jX_C(i_2 - i_1) + jX_L(i_2 - i_3) + jX_L i_3$$

$$0 = -(-jX_C)i_1 + (R_2 + X_L - jX_C)i_2 - R_2 i_3$$

$$0 = -(-j318.3\Omega)i_1 + (500 + j628.3 - j318.3\Omega)i_2 - 500\Omega i_3$$

$$0 = j318.3\Omega i_1 + (500 + j310\Omega)i_2 - 500\Omega i_3$$

For loop 3:

$$0 = v_{R1} + v_{R2} + v_{R3}$$

$$0 = R_1(i_3 - i_1) + R_2(i_3 - i_2) + R_3 i_3$$

$$0 = -R_1 i_1 - R_2 i_2 + (R_1 + R_2 + R_3) i_3$$

$$0 = -1k\Omega i_1 - 500\Omega i_2 + (1k\Omega + 500\Omega + 2k\Omega) i_3$$

$$0 = -1k\Omega i_1 - 500\Omega i_2 + 3.5k\Omega i_3$$

The final set of equations is:

$$10\angle 0^\circ V = (1k\Omega - j318.3\Omega) i_1 + j318.3\Omega i_2 - 1k\Omega i_3$$

$$0 = j318.3\Omega i_1 + (500 + j310\Omega) i_2 - 500\Omega i_3$$

$$0 = -1k\Omega i_1 - 500\Omega i_2 + 3.5k\Omega i_3$$

The system of equations has diagonal symmetry. The results are: $i_1 = 10.24E-3\angle 16^\circ$ amps, $i_2 = 6.754E-3\angle -85.7^\circ$ amps and $i_3 = 2.888E-3\angle -3.13^\circ$ amps.

For v_b, this is just the voltage across the 1 kΩ resistor. Note that a pair of meshing currents (i_1 and i_3) are flowing through that resistor, so we must determine the net value of current. If we assume the reference polarity for v_b is positive, that coincides with the direction of i_1, and thus the net current must be $i_1 - i_3$. The result is $i_{net} = 7.57E-3\angle 23.2^\circ$ amps. Therefore, $v_b = 7.57\angle 23.2^\circ$ volts.

Computer Simulation

Figure $6.3.7$ shows the bridge circuit of Example $6.3.2$ captured in a simulator. This will be used to verify the computed result.

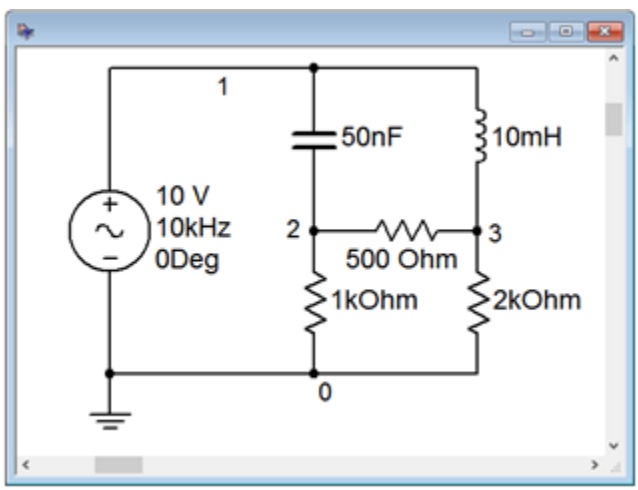

Figure $6.3.7$: Circuit of Figure $6.3.5$ in a simulator.

A transient analysis is run on the circuit, plotting node 2 which corresponds to v_b, and node 1, the input voltage, which is handy for phase reference.

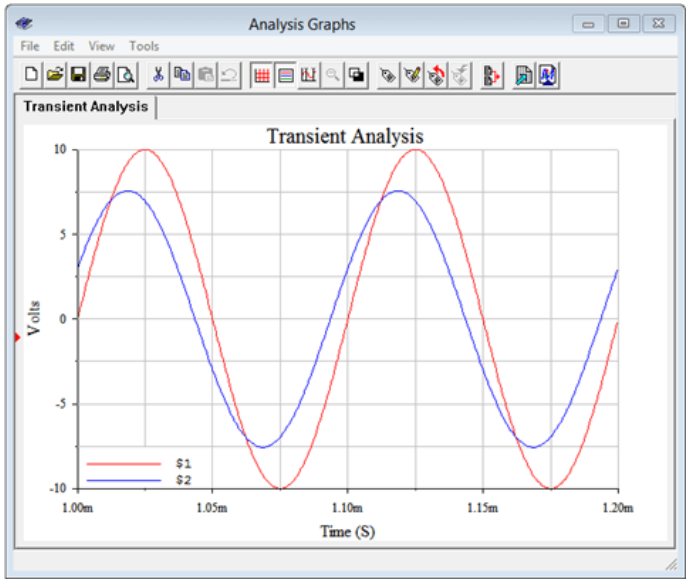

Figure $6.3.8$: Transient analysis for the circuit of Figure $6.3.7$.

Examining the plot, we can see that the node 2 voltage is just above 7.5 volts peak, as calculated. Further, this waveform leads the the input waveform by just over a quarter of a division. As this plot shows four divisions per cycle, each division is 90 degrees. This indicates a leading or positive phase shift in the low 20 degree range, and that corroborates nicely the computed value of 23.2 degrees.

Inspection Method

Like nodal analysis, it is possible that the system of equations can be obtained directly through inspection. This is true only if the circuit contains no current sources. Look at the final set of equations derived in Example $6.3.2$ from Figure $6.3.6$. A clear pattern will emerge. To generate an equation for a given loop, simply focus on that loop and ask the following questions: What is the total source voltage in this loop? This yields the voltage constant on the left side of the equals sign. Next, sum the resistance and reactance values in the loop under inspection. This yields the coefficient for that current term. For the other current coefficients, sum the resistances and reactances that are in common between the loop under inspection and the other loops (e.g., for loop 1, X_C is in common with loop 2). These values will always be negative (an exception arises with a “double negative”, as seen with the capacitor). As usual, the set of equations produced must exhibit diagonal symmetry.

While it is possible to extend this technique to include current sources, usually it is easier and less error-prone to convert the current sources into voltage sources. Then the process can continue with the direct inspection method outlined above. Finally, it is important to remember that the number of loops determines the number of equations to be solved. This method will be illustrated in the example following.

Example $6.3.3$

For the circuit of Figure $6.3.9$, find v_b and the current through the 15 Ω resistor. $E_1 = 10\angle 0^\circ$ volts peak and $E_2 = 20\angle 90^\circ$ volts peak.

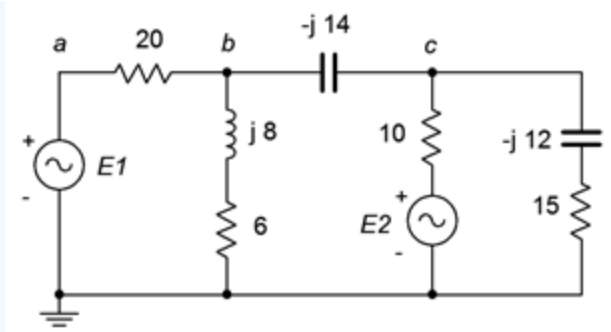

Figure 6.3.9: Circuit for Example 6.3.3.

We identify and label three loops, as shown in Figure 6.3.10. This circuit utilizes only voltage sources and no current sources. Therefore, we can apply the inspection method without extra effort.

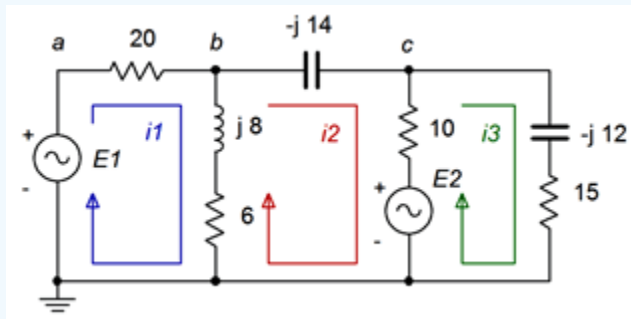

Figure 6.3.10: Circuit of Figure 6.3.9 with current loops drawn.

We start at loop 1 and sum all of the voltage sources. The sole source is E_1.

$$10\angle 0^\circ V = ...$$

Now we sum all of the resistances and reactances in this loop. This is the coefficient for the first current term.

$$10\angle 0^\circ V = (20\Omega + 6\Omega + j8\Omega)i_1 ...$$

We continue the process by determining the components that are in common between this loop and the next loop. Remember, this coefficient is negative.

$$10\angle 0^\circ V = (20\Omega + 6\Omega + j8\Omega)i_1 - (6\Omega + j8\Omega)i_2 ...$$

We repeat the process by determining the common components with the next loop. This coefficient is negative. In this situation, no components are in common between loops 1 and 3. We shall leave in placeholder with a coefficient of zero, just as a reminder that we didn't forget anything and also to ensure that the coefficients in the final set of equations line up nicely.

$$10\angle 0^\circ V = (26 + j8\Omega)i_1 - (6 + j8\Omega)i_2 - 0i_3$$

We now move to loop 2 and repeat the sequence of steps. There is only one source, E_2, and it shows up negative as mesh current i_2 is flowing out of its negative terminal. The result is:

$$-20\angle 90^\circ V = -(6 + j8\Omega)i_1 + (6 + 10 + j8 - j14\Omega)i_2 - 10\Omega i_3$$

$$-20\angle 90^\circ V = -(6 + j8\Omega)i_1 + (16 - j6\Omega)i_2 - 10\Omega i_3$$

And finally the third loop. Here the second source shows up as positive.

$$20\angle 90^\circ V = -0i_1 - 10\Omega i_2 - (10 + 15 - j12\Omega)i_3$$

$$20\angle 90^\circ V = -0i_1 - 10\Omega i_2 - (25 - j12\Omega)i_3$$

The completed system of equations is:

$$10\angle 0^\circ V = (26 + j8\Omega)i_1 - (6 + j8\Omega)i_2 - 0i_3$$

$$-20\angle 90^\circ V = -(6 + j8\Omega)i_1 + (16 - j6\Omega)i_2 - 10\Omega i_3$$

$$20\angle 90^\circ V = -0i_1 - 10\Omega i_2 - (25 - j12\Omega)i_3$$

The system has diagonal symmetry. The resulting currents are: $i_1 = 0.6131\angle -15.5^\circ$ amps, $i_2 = 0.6687\angle -49.2^\circ$ amps and $i_3 = 0.5611\angle 99.3^\circ$ amps.

The current through the 15 Ω resistor is i_3, so that much is done. Regarding v_b, it can be found using Ohm's law as v_b is the series connection of the 6 Ω resistor and $j8\Omega$ inductor times the current through them. This current is the pair of meshing currents i_1 and i_2. Assuming the reference polarity for v_b is positive, that is the direction of i_1, and thus the net current must be $i_1 - i_2$. The result is $0.375\angle 65.8^\circ$ amps. Therefore, $v_b = 3.75\angle 119^\circ$ volts. To crosscheck this, we can subtract the voltage across the 20 Ω resistor from E_1. That's $10\angle 0^\circ$ volts minus 20 Ω times $0.6131\angle -15.5^\circ$ amps, or $3.75\angle 119^\circ$ volts, as expected.

Supermesh

On occasion you may find a current source which has no associated internal impedance, such as the one in the circuit of Figure $6.3.11$. This is similar to the situation discussed previously with nodal analysis where a voltage source does not have a specified internal impedance. As with nodal, there are two ways of solving this predicament. The first technique is to add a very large impedance in parallel with the current source and then perform a source conversion on the pair so that the inspection method of mesh can be used. The larger the value of this impedance, the greater the accuracy. As a general rule it should be at least a couple of orders of magnitude larger than any surrounding impedance, and preferably larger. The second technique is to use supermesh. A supermesh is a larger mesh loop than contains other mesh loops inside of it.

Refer to the circuit shown in Figure $6.3.11$. In the center we have a current source, I_s, which lacks an associated internal impedance. Two traditional mesh loops, i_1 and i_2, are labeled as usual. The problem here is that we cannot use an Ohm's law-based i_Z voltage drop for v_b. We have no way to express this as the voltage across I_s is an unknown. On the other hand, what we do know is that Is must equal the combination of the original mesh currents i_1 and i_2. That is, from the perspective of the first loop, $I_s = i_2 - i_1$. Remember, one or both of the mesh currents could be negative, and thus rotating counterclockwise.

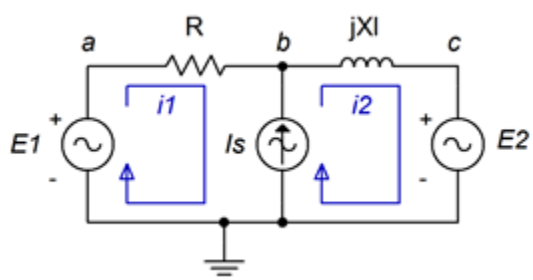

Figure $6.3.11$: Circuit for supermesh.

At this point we invoke the idea of a supermesh loop. First, we replace the problematic current source with its ideal internal impedance, an open. Second, a supermesh loop is drawn which encompasses the original two loops. This is shown in Figure $6.3.12$. The supermesh loop is shown in red and labeled.

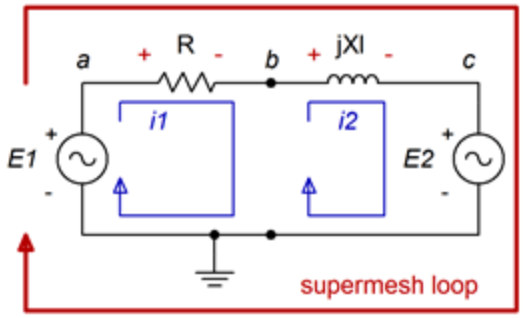

Figure 6.3.12: Supermesh labeled.

We now perform a KVL summation around the supermesh loop, similar to what we have done in prior work. The difference this time around is that we need to recognize that components each see one of the original mesh currents; namely i_1 or i_2 here. We do not solve for a supermesh current. Instead, we just use the supermesh loop to define the KVL summation. The summation follows:

$$\sum v_{rises} = \sum v_{drops}$$

$$E_1 = v_R + v_{XL} + E_2$$

The voltage drops across the resistor and inductor can be expanded using Ohm's law, using the original mesh current associated with each component.

$$E_1 - E_2 = i_1 R + i_2 j X_L$$

Also, by inspection,

$$I_s = i_2 - i_1 \text{ or}$$

$$i_2 = i_1 + I_s$$

We now have two equations with two unknowns and can solve for i_1 and i_2. This procedure is illustrated in the following example.

Example 6.3.4

Find v_b for the circuit of Figure 6.3.13. $E_1 = 20\angle 0^\circ$ volts, $E_1 = 18\angle 90^\circ$ volts and $I_S = 10E - 3\angle 0^\circ$ amps.

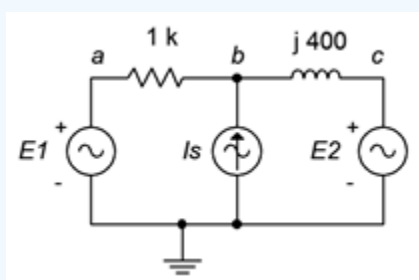

Figure 6.3.13: Circuit for Example 6.3.4.

First, we label the loops, as shown in Figure 6.3.14.

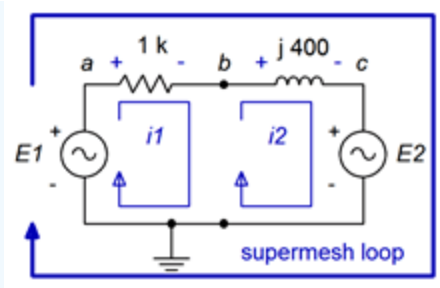

Figure 6.3.14: Circuit of Figure 6.3.13 with supermesh labeled.

Now we perform a KVL summation around the supermesh loop.

$$\sum v_{rises} = \sum v_{drops}$$

$$20\angle 0^\circ V = v_R + v_{XL} + 18\angle 90^\circ V$$

Expand using Ohm's law and rearrange:

$$20\angle 0^\circ V - 18\angle 90^\circ V = 1k\Omega i_1 + j400\Omega i_2$$

$$26.9\angle -42^\circ V = 1k\Omega i_1 + j400\Omega i_2$$

By inspection we can see that:

$$10E - 3\angle 0^\circ A = i_2 - i_1 \text{ or}$$

$$i_2 = i_1 + 10E - 3\angle 0^\circ A$$

We can substitute this expression into the prior supermesh expression and solve for i_1:

$$26.9\angle -42^\circ V = 1k\Omega i_1 + j400\Omega i_2$$

$$26.9\angle -42^\circ V = 1k\Omega i_1 + j400\Omega(i_1 + 10E - 3\angle 0^\circ A)$$

$$26.9\angle -42^\circ V = 1k\Omega i_1 + j400\Omega i_1 + 4\angle 90^\circ V$$

$$29.7\angle -44.7^\circ V = (1k + j400\Omega)i_1$$

$$i_1 \approx 27.6E - 3\angle -69.5^\circ A$$

Thus, $i_2 = 27.6E - 3\angle -69.5^\circ$ amps + $10E - 3\angle 0^\circ$ amps, or $32.5E - 3\angle -52.8^\circ$ amps. To determine v_b we simply subtract the drop across the 1 kΩ resistor from E_1:

$$v_b = 20\angle 0^\circ V - i_1 1k\Omega$$

$$v_b = 20\angle 0^\circ V - 27.6E - 3\angle -69.5^\circ A 1k\Omega$$

$$v_b \approx 27.85\angle 68.2^\circ V$$

As a crosscheck, we could also add the voltage across the inductor to E_2:

$$v_b = 18\angle 90^\circ V + i_2 j400\Omega$$

$$v_b = 18\angle 90^\circ V + 32.5E - 3\angle -52.8^\circ A j400\Omega$$

$$v_b \approx 27.85\angle 68.2^\circ V$$

Comparison of Nodal and Mesh

Having covered both nodal and mesh in some detail, it is fair to look at the two techniques to gauge their strengths and weaknesses. Compared to nodal analysis, mesh analysis has the advantage of dealing with impedances rather than admittances when writing the system of equations. Further, the mesh inspection method works with voltage sources, which tends to be convenient for many circuits, while the nodal inspection method requires current sources. On the down side, the resulting set of mesh currents requires further processing in order to find either branch currents or node voltages. In contrast, nodal analysis produces node voltages directly with no further processing. Mesh also has the disadvantage of being limited to planar circuits while there is no such limit to nodal. Ultimately, instead of thinking in terms of which technique is “better” overall, it is more efficient to use the proper tool for the job at hand. For example, if a circuit is populated with voltage sources, mesh might be the more efficient route, especially if specific currents are desired. On the other hand, if you need to find voltages in a circuit that contains numerous current sources, nodal would be more effective.

This page titled 6.3: Mesh Analysis is shared under a CC BY-NC-SA 4.0 license and was authored, remixed, and/or curated by James M. Fiore via source content that was edited to the style and standards of the LibreTexts platform.

6.4: Dependent Sources

A dependent source is a current or voltage source whose value is not fixed. Instead, the value depends on some other circuit current or voltage. The general form for the value of a dependent source is $N = kM$ where M and N are currents and/or voltages and k is the proportionality constant. For example, the value of a dependent voltage source may be a function of a current, so instead of the source being equal to, say, 10 volts, it could be equal to twenty times the current passing through a particular resistor, or $v = 20i$.

There are four possible dependent sources: They are the voltage-controlled voltage source (VCVS), the voltage-controlled current source (VCCS), the current-controlled voltage source (CCVS), and the current-controlled current source (CCCS). The source and control parameters are the same for both the VCVS and the CCCS so k has no units, although it may be given as volts/volt and amps/amp, respectively. For the VCCS and CCVS, k has units of amps/volt and volts/amp, respectively. These are referred to as the transresistance and transconductance of the sources with units of ohms and siemens.

The schematic symbols for dependent or controlled sources are usually drawn using a diamond instead of a circle. Also, for simulators, there will be a secondary connection for the controlling current or voltage. Examples of voltage-controlled and current-controlled sources are shown in Figure $6.4.1$. On each of these symbols, the control element is shown to the left of the source.

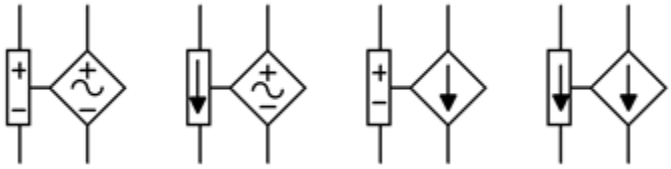

Figure $6.4.1$: Dependent source symbols as used in common simulators (left to right): VCVS, CCVS, VCCS, and CCCS.

The control portion can be thought of as a connection for a voltmeter or ammeter which senses the control parameter. These sensing connections are not always drawn on a schematic. Instead, the source simply may be labeled as a function, as in $v = 0.02i_X$ where i_X is the controlling current. These simpler controlled sources are shown in Figure $6.4.2$ and are typical in electronic schematics and texts. In some cases, these sources are drawn with a circle instead of a diamond. Also, the sine wave shape shown here is often omitted from the inside of symbol, however, current sources are always drawn with an arrow pointing in the reference direction and voltages sources always include the reference polarity.

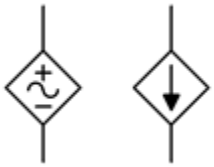

Figure $6.4.2$: Generic symbols for dependent voltage source (left) and current source (right).

Dependent sources are not “off-the-shelf” items in the same way that a battery or signal generator are. Rather, dependent sources are used to model the behavior of more complex devices. For example, a bipolar junction transistor commonly is modeled as a CCCS while a field effect transistor may be modeled as a VCCS. Similarly, many amplifier circuits are modeled as VCVS systems. Solutions for circuits using dependent sources follow along the lines of those established for independent sources (i.e., the application of Ohm's law, KVL, KCL, etc.), however, the sources are now dependent on the remainder of the circuit which tends to complicate the analysis. In general, there are two possible circuit configurations for dependent sources: isolated and coupled. An example of the isolated form is shown in Figure $6.4.3$.

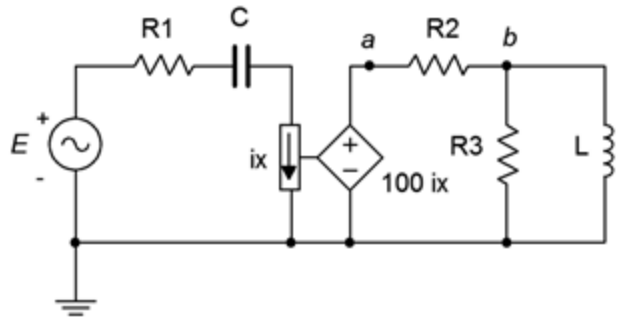

Figure $6.4.3$: Dependent source circuit: isolated.

In this example, the dependent source (center, a CCVS) does not interact with the sub-circuit on the left driven by the independent source E. Thus it can be analyzed as two separate circuits as shown in Figure $6.4.4$.

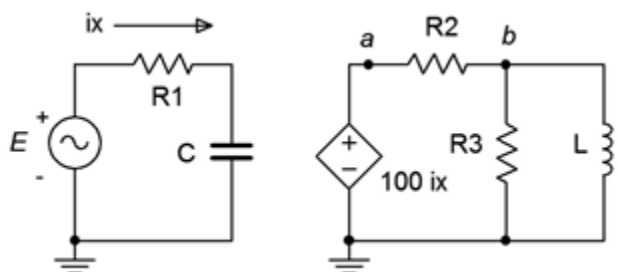

Figure $6.4.4$: Dependent source circuit: isolated treated as two circuits.

Solutions for this form are relatively straightforward. The control value for the dependent source can be computed directly using standard techniques. Then this value is substituted into the dependent source and the analysis continues as normal. Sometimes it is convenient if the solution for a particular voltage or current is defined in terms of the control parameter rather than as a specific value (e.g., the current through a particular component might be 75 i_1 instead of just 1 milliamp).

The second type of circuit (coupled) is somewhat more complex in that the dependent source can affect the parameter that controls the dependent source. An example is shown in Figure $6.4.5$.

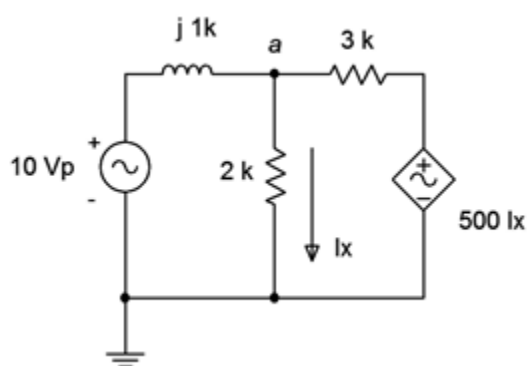

Figure $6.4.5$: Dependent source circuit: coupled.

In this example it should be obvious that the voltage from the dependent source can affect the voltage at node a, and it is this very voltage that defines i_x, which in turn sets up the value of the dependent source. As far as analysis is concerned, either mesh or nodal can be used. The dependent source(s) will contribute terms that include the controlling parameter(s) so some additional effort will be required. To illustrate the technique, consider the circuit of Figure $6.4.6$. We shall use the general method of nodal analysis.

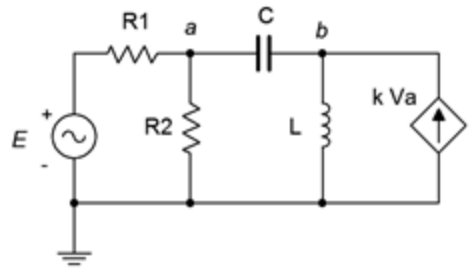

Figure $6.4.6$: Circuit with a voltage-controlled current source.

We begin by defining current directions. Assume that the currents through R_1 and C are flowing into node a, the current through R_2 is flowing out of node a, and the current through L is flowing out of node b. We shall number the branch currents to reflect the associated components, from left to right. The resulting KCL equations are:

$$\sum i_{in} = \sum i_{out}$$

$$\text{Node } a : i_1 + i_3 = i_2$$

$$\text{Node } b : kv_a = i_3 + i_4$$

The currents are then described by their Ohm's law equivalents:

$$\text{Node } a : \frac{E - v_a}{R_1} + \frac{v_b - v_a}{-jX_C} = \frac{v_a}{R_2}$$

$$\text{Node } b : kv_a = \frac{v_b - v_a}{R_2} + \frac{v_b}{jX_L}$$

Expanding terms yields:

$$\text{Node } a : \frac{E}{R_1} - \frac{v_a}{R_1} + \frac{v_b}{-jX_C} - \frac{v_a}{-jX_C} = \frac{v_a}{R_2}$$

$$\text{Node } b : kv_a = \frac{v_b}{R_2} - \frac{v_a}{R_2} + \frac{v_b}{jX_L}$$

Collecting terms and simplifying yields:

$$\text{Node } a : \frac{E}{R_1} = \left(\frac{1}{R_1} + \frac{1}{R_2} + \frac{1}{-jX_C}\right) v_a - \frac{1}{-jX_C} v_b$$

$$\text{Node } b : 0 = -\left(k + \frac{1}{R_2}\right) v_a + \left(\frac{1}{R_2} + \frac{1}{jX_L}\right) v_b$$

At this point, the component values and independent source value would be inserted into the equations and the system solved.

Finally, referring back to the prior chapter, it is possible to perform source conversions on dependent sources, within limits. The new source will remain a dependent source (e.g., VCVS to VCCS). This process is not applicable if the control parameter directly involves the internal impedance (i.e., is its voltage or current).

Example 6.11

For the circuit shown in Figure $6.4.7$, determine v_c if the source is $1\angle 0^\circ$ volt peak.

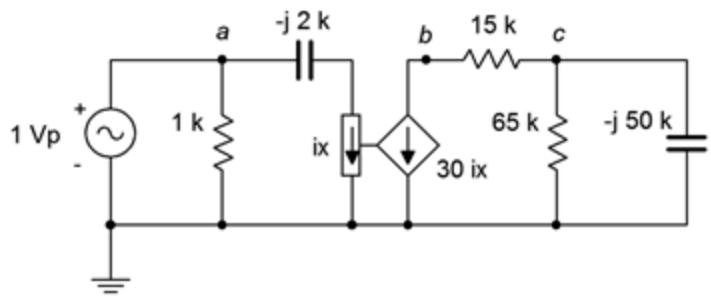

Figure 6.4.7: Circuit for Example 6.4.1.

This is an example of the isolated or uncoupled dependent source. The value of the dependent current source is 30 times the value of the current labeled i_x, which is the current flowing through the $-j2k\Omega$ capacitive reactance. We can find this current first and then determine the resulting value of the dependent source. The analysis will require nothing beyond basic series-parallel techniques. We will number the components from left to right.

The current i_x is found via Ohm's law:

$$i_x = \frac{E}{-jX_{C1}}$$

$$i_x = \frac{1\angle 0^\circ V}{-j2k\Omega}$$

$$i_x = 0.5E - 3\angle 90^\circ A$$

The dependent source is 30 times this value, or $15E - 3\angle 90^\circ$ amps. Given the reference direction of this source, the current is flowing upwards through the 65 kΩ resistor and parallel $-j50k\Omega$ capacitor. This establishes v_c as negative. Multiplying i_x by the parallel impedance yields the desired voltage.

$$Z_{RC} = \frac{R_3 \times jX_{C2}}{R_3 - jX_{C2}}$$

$$Z_{RC} = \frac{65k\Omega \times (-j50k\Omega)}{65k\Omega - j50k\Omega}$$

$$Z_{RC} = 39.6E3\angle -52.4^\circ\Omega$$

$$v_c = -i_x \times Z_{RC}$$

$$v_c = -15E - 3\angle 90^\circ\Omega \times 39.6E3\angle -52.4^\circ\Omega$$

$$v_c = 594\angle -142.4^\circ V$$

The next example features a coupled configuration solved using nodal analysis.

Example 6.12

In the circuit of Figure 6.4.8, determine v_a. $E = 20\angle 0^\circ$ volts peak at 50 kHz.

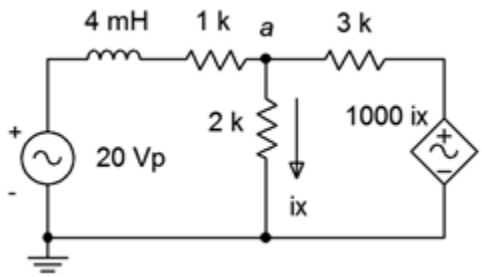

Figure 6.4.8: Circuit for Example 6.4.2.

In this circuit we have a current controlled voltage source, or CCVS. The proper unit for the constant of 1000 is ohms (volts over amps). First, we need to determine the reactance value for the inductor.

$$X_L = 2\pi f L$$

$$X_L = 2\pi 50kHz4mH$$

$$X_L = j1257\Omega$$

There is only one node of interest here (a) so we will only need one KCL equation. The sole unknown is v_a. Let's assume that the reference directions of the currents flowing through the 1 kΩ and 3 kΩ resistors are entering node a. We'll call these i_1 and i_2, respectively. The exiting current is i_x.

The KCL summation is:

$$\sum i_{in} = \sum i_{out}$$

$$i_1 + i_2 = i_x$$

This is expanded using Ohm's law (in several steps, for clarity).

$$i_x = i_1 + i_2$$

$$\frac{v_a}{R_2} = \frac{E - v_a}{R_1 + jX_L} + \frac{1000(\Omega)i_x - v_a}{R_3}$$

$$\frac{v_a}{2k\Omega} = \frac{20\angle 0^\circ V - v_a}{1k + j1257\Omega} + \frac{1000(\Omega)i_x - v_a}{3k\Omega}$$

$$\frac{20\angle 0^\circ V}{1k + j1257\Omega} = \frac{v_a}{1k + j1257\Omega} + \frac{v_a}{2k\Omega} + \frac{v_a}{3k\Omega} - \frac{1000(\Omega)i_x}{3k\Omega}$$

$$12.45\angle -51.5^\circ A = \frac{v_a}{1k + j1257\Omega} + \frac{v_a}{2k\Omega} + \frac{v_a}{3k\Omega} - \frac{1000(\Omega)v_a}{2k\Omega \times 3k\Omega}$$

$$12.45\angle -51.5^\circ A = \frac{v_a}{1k + j1257\Omega} + \frac{v_a}{2k\Omega} + \frac{v_a}{3k\Omega} - \frac{v_a}{6k\Omega}$$

$$12.45\angle -51.5^\circ A = \left(\frac{1}{1k + j1257\Omega} + \frac{1}{2k\Omega} + \frac{1}{3k\Omega} - \frac{1}{6k\Omega}\right) v_a$$

$$12.45\angle -51.5^\circ A = 1.161E-3\angle -24.8^\circ S v_a$$

$$v_a = 10.7\angle -26.7^\circ V$$

Computer Simulation

For verification, the dependent source circuit of Example $6.4.2$ is entered into a simulator as shown in Figure $6.4.9$. The results are shown in Figure $6.4.10$.

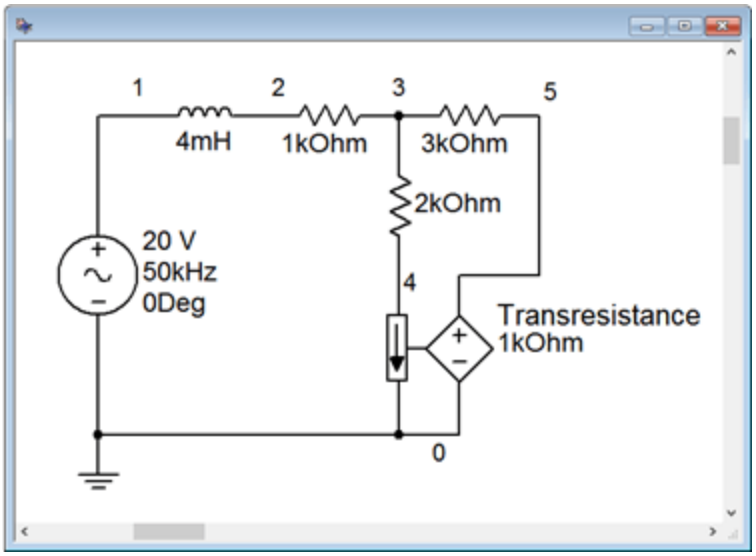

Figure 6.4.9: Circuit of Figure 6.4.8 in a simulator.

Note the connection to sense the current i_x. It is inserted just like an ammeter. As mentioned previously, the constant for the dependent source is a transresistance and has units of ohms. A transient analysis is run the circuit, plotting the independent source, E, as node 1 (blue), and v_a as node 3 (red). Both the amplitude and lagging phase shift line up nicely with the computed result. The voltage of the dependent source is also plotted as node 5 (green). Verifying this potential is left as an exercise.

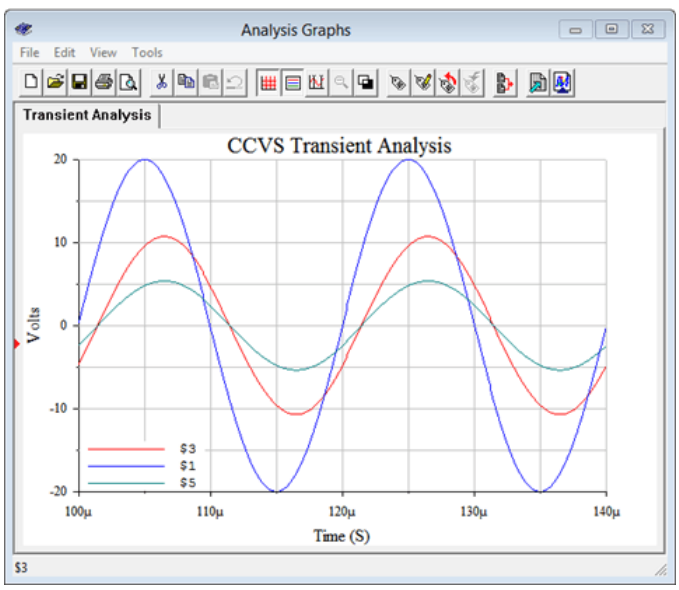

Figure 6.4.10: Transient analysis for the circuit of Figure 6.4.9.

This page titled 6.4: Dependent Sources is shared under a CC BY-NC-SA 4.0 license and was authored, remixed, and/or curated by James M. Fiore via source content that was edited to the style and standards of the LibreTexts platform.

6.5: Summary

Nodal analysis can be used to solve virtually any complex multi-source AC electrical circuit. It is based on KCL, writing expressions involving each node in the circuit. A system of equations results, there being as many equations as there are nodes in the circuit, minus the reference node (typically taken as ground). The set of equations will exhibit diagonal symmetry, which can be used as a crosscheck before setting out to solve them. The solution will be a complete set of node voltages. From these, any branch current may be determined as needed.

There are two different methods of creating the system of equations. The first method is deemed the general method and will work for a mix of current sources and voltage sources. Individual currents are defined based on the node voltages and any known current sources. KCL is then applied at each node, followed by simplification and combination of terms to arrive at the end equations. The second approach is referred to as the inspection method. If the circuit contains only current sources (or if the voltage sources are converted to equivalent current sources), this method allows direct generation of the system of equations without the need for simplification and thus is less prone to error.

Mesh analysis can be used to solve any planar complex multi-source AC electrical circuit. In some respects it is the mirror of nodal analysis. It is based on KVL, writing expressions involving each closed loop in the circuit. The loops are minimally sized and the set of loops must cover every component in the circuit. A system of equations results, there being as many equations as there are loops. As with nodal analysis, the set of equations will exhibit diagonal symmetry. The solution will be a complete set of mesh currents. From these, any branch current and node voltage may be determined.

Like nodal, mesh offers two different methods of creating the system of equations. The general method will work for a mix of current sources and voltage sources. Individual loops are defined based on the meshing currents passing through each component. KVL is then applied around each loop, followed by simplification and combination of terms to arrive at the end equations. In contrast, if the circuit contains only voltage sources (or if the current sources are converted), then the inspection method may be used. This method allows direct generation of the system of equations and is faster and less error prone.

Dependent sources are current or voltage sources whose value depends on the current or voltage developed in some other part of the circuit. There are four types: current controlled current source (CCCS), current controlled voltage source (CCVS), voltage controlled current source (VCCS) and voltage controlled voltage source (VCVS). These sources are used commonly to model the characteristics of active devices such bipolar and field effect transistors. Techniques for solution tend to be a bit more involved than when using constant sources, however, nodal analysis in particular tends to work well.

Review Questions

1. Describe the practical differences between nodal analysis and mesh analysis.

2. What is diagonal symmetry? Of what use is it?

3. What are the differences between the general method and the inspection method of nodal analysis?

4. What are the differences between the general method and the inspection method of mesh analysis?

5. What is a supernode?

6. What is a supermesh?

7. Describe the concept of dependent sources and how they differ from independent or constant sources.

This page titled 6.5: Summary is shared under a CC BY-NC-SA 4.0 license and was authored, remixed, and/or curated by James M. Fiore via source content that was edited to the style and standards of the LibreTexts platform.

6.6: Exercises

Analysis

(All source values are in amps or volts unless specified otherwise)

1. Given the circuit in Figure $6.6.1$, use nodal analysis to determine v_c. $I_1 = 3\angle 0^\circ$, $I_2 = 0.9\angle 0^\circ$.

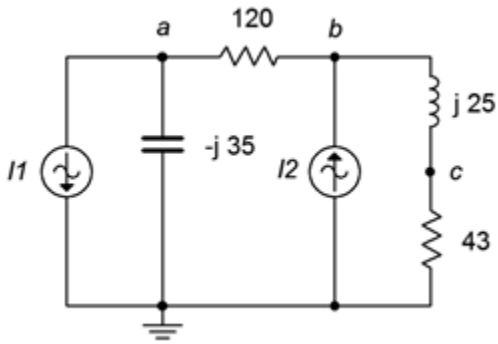

Figure $6.6.1$

2. Use nodal analysis to find the current through the 120 Ω resistor in the circuit of Figure $6.6.2$. $I_1 = 0.5\angle 90^\circ$, $I_2 = 1.6\angle 0^\circ$.

3. Use nodal analysis to find the current through the 43 Ω resistor in the circuit of Figure $6.6.2$. The sources are in phase.

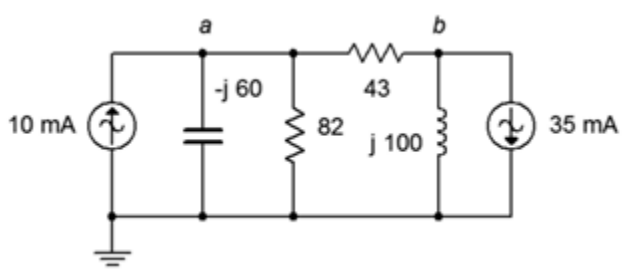

Figure $6.6.2$

4. Given the circuit in Figure $6.6.2$, use nodal analysis to determine v_b. The sources are in phase.

5. Given the circuit in Figure $6.6.3$, determine v_c. $I_1 = 3\angle 0^\circ$, $I_2 = 2\angle 0^\circ$.

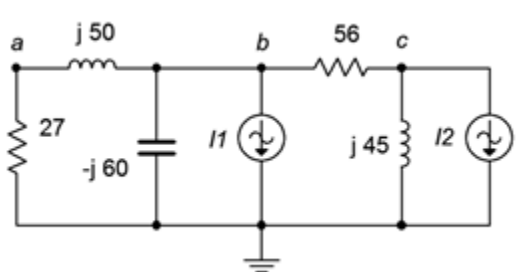

Figure $6.6.3$

6. Use nodal analysis to find the current through the $j45\Omega$ inductor in the circuit of Figure $6.6.3$. $I_1 = 2\angle 0^\circ$, $I_2 = 1.5\angle 60^\circ$.

7. Use nodal analysis to find the current through the 4 Ω resistor in the circuit of Figure $6.6.4$. $I_1 = 1\angle 45^\circ$, $I_2 = 2\angle 45^\circ$.

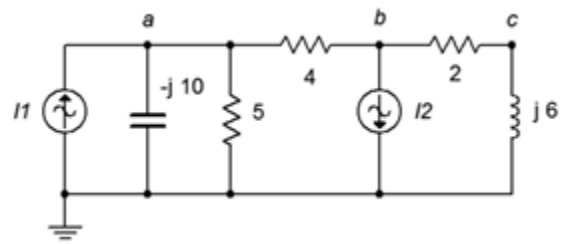

Figure $6.6.4$

8. Given the circuit in Figure $6.6.4$, use nodal analysis to determine v_c. $I_1 = 6\angle 30^\circ$, $I_2 = 4\angle 0^\circ$.

9. Given the circuit in Figure $6.6.5$, use nodal analysis to determine v_{ac}. $I_1 = 10\angle 0^\circ$, $I_2 = 6\angle 0^\circ$.

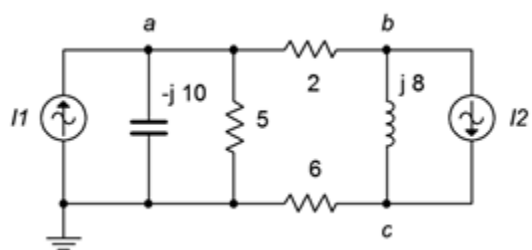

Figure $6.6.5$

10. Use nodal analysis to find the current through the $j8\Omega$ inductor in the circuit of Figure $6.6.5$. $I_1 = 3\angle 0^\circ$, $I2 = 5\angle 30^\circ$.

11. Use nodal analysis to find the current through the 22 Ω resistor in the circuit of Figure $6.6.6$. $I_1 = 800E-3\angle 0^\circ$, $I_2 = 2.5\angle 0^\circ$, $I_3 = 2\angle 20^\circ$.

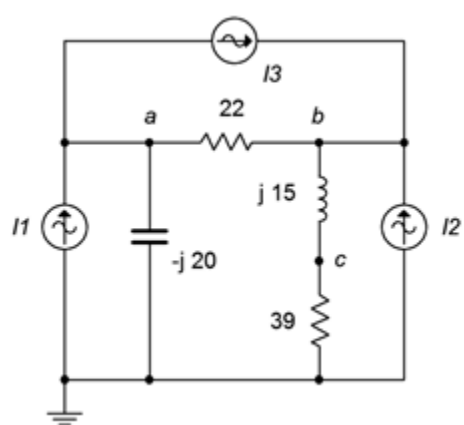

Figure $6.6.6$

12. Given the circuit in Figure $6.6.6$, use nodal analysis to determine v_c. $I_1 = 4\angle 90^\circ$, $I_2 = 10\angle 120^\circ$, $I_3 = 5\angle 0^\circ$.

13. Given the circuit in Figure $6.6.7$, use nodal analysis to determine v_c. $I_1 = 3E-3\angle 0^\circ$, $I_2 = 10E-3\angle 0^\circ$, $I_3 = 2E-3\angle 0^\circ$.

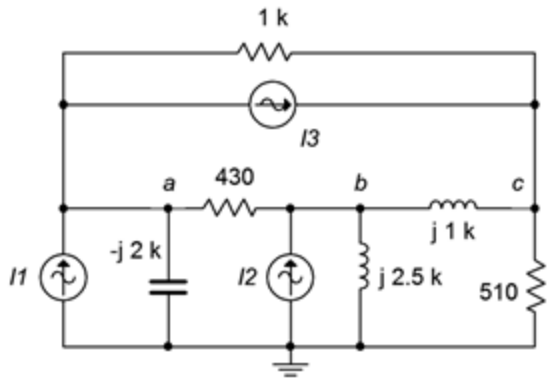

Figure $6.6.7$

14. Use nodal analysis to find the current through the $-j2$ kΩ capacitor in the circuit of Figure $6.6.7$. $I_1 = 1E - 3\angle 0^\circ$, $I_2 = 5E - 3\angle 0^\circ$, $I_3 = 6E - 3\angle -90^\circ$.

15. Use nodal analysis to find the current through the 3.3 kΩ resistor in the circuit of Figure $6.6.8$. $E = 36\angle 0^\circ$, $I = 4E - 3\angle -120^\circ$.

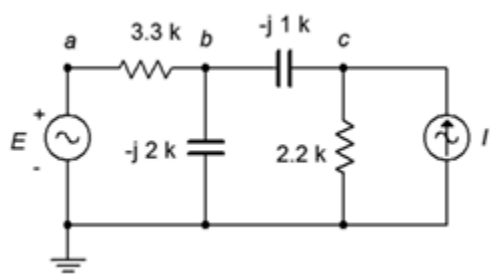

Figure $6.6.8$

16. Given the circuit in Figure $6.6.8$, write the node equations and determine v_c. $E = 18\angle 0^\circ$, $I = 7.5E - 3\angle -30^\circ$.

17. Given the circuit in Figure $6.6.9$, use nodal analysis to determine v_c. $E = 40\angle 180^\circ$, $I = 20E - 3\angle 0^\circ$.

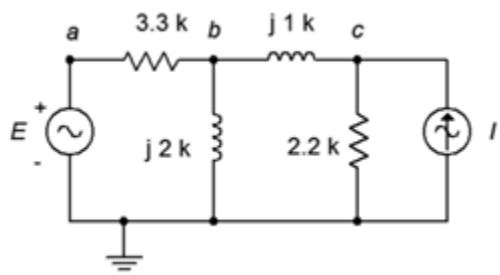

Figure $6.6.9$

18. Use nodal analysis to find the current through the 2.2 kΩ resistor in Figure $6.6.9$. $E = 240\angle 0^\circ$, $I = 100E - 3\angle 0^\circ$.

19. Use nodal analysis to find v_{bc} in the circuit of Figure $6.6.10$.

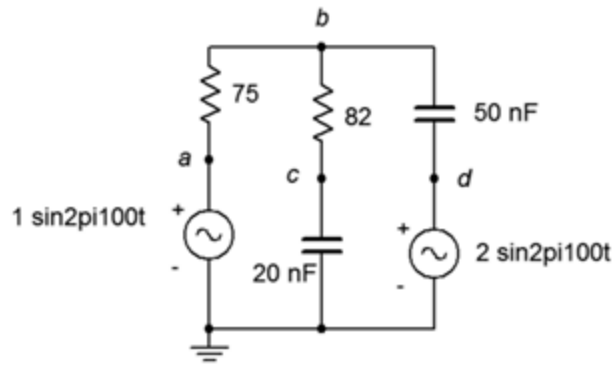

Figure $6.6.10$

20. Use nodal analysis to find the current through the 2.7 kΩ resistor in the circuit of Figure $6.6.11$.

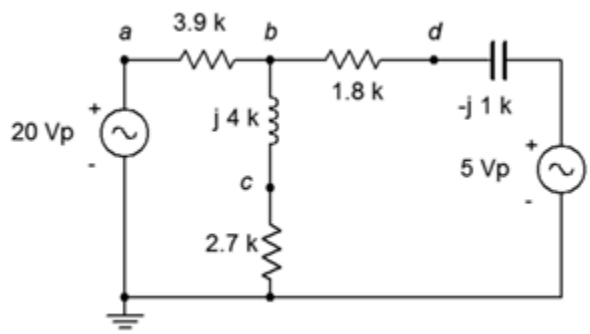

Figure $6.6.11$

21. Given the circuit in Figure $6.6.12$, use nodal analysis to determine v_{ba}. $E_1 = 1\angle 0^\circ$, $E_2 = 2\angle 0^\circ$.

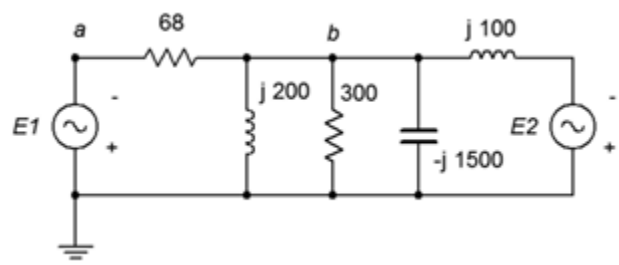

Figure $6.6.12$

22. Given the circuit in Figure $6.6.13$, use nodal analysis to determine v_{ad}. $E_1 = 9\angle 0^\circ$, $E_2 = 5\angle 40^\circ$.

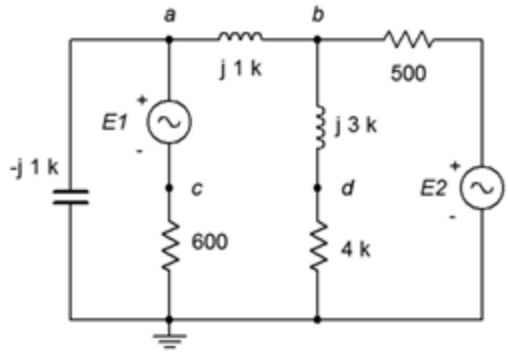

Figure $6.6.13$

23. Use nodal analysis to find v_{cb} in the circuit of Figure $6.6.14$. $E_1 = 10\angle -180^\circ$, $E_2 = 25\angle 0^\circ$.

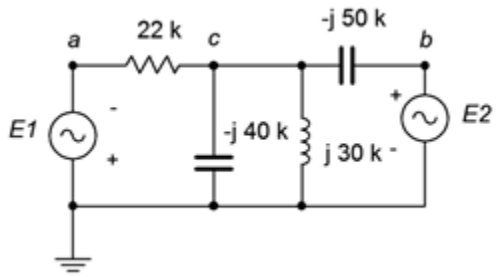

Figure $6.6.14$

24. Given the circuit in Figure $6.6.15$, use nodal analysis to determine v_{bc}. $E = 20\angle 0^\circ$, R_1 = 10 kΩ, R_2 = 30 kΩ, R_3 = 1 kΩ, $X_C = -j15$ kΩ, $X_L = j20$ kΩ.

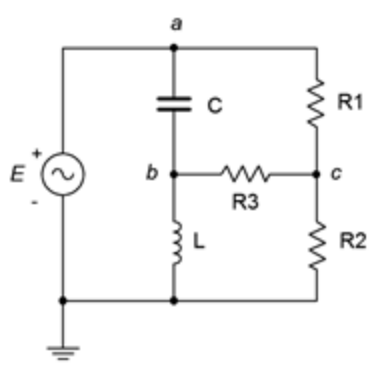

Figure $6.6.15$

25. Given the circuit in Figure $6.6.16$, write the mesh loop equations and determine v_b.

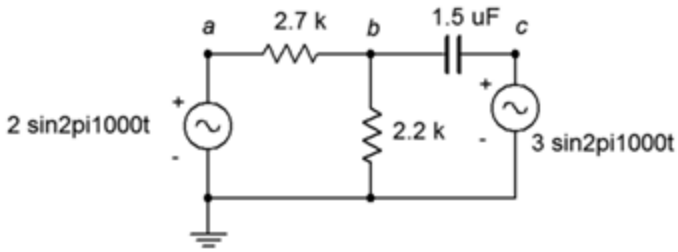

Figure $6.6.16$

26. Use mesh analysis to find the current through the 2.7 kΩ resistor in the circuit of Figure $6.6.16$.

27. Use mesh analysis to find the current through the 75 Ω resistor in the circuit of Figure $6.6.10$.

28. Given the circuit in Figure $6.6.10$, write the mesh loop equations and determine v_c.

29. Given the circuit in Figure $6.6.11$, write the mesh loop equations and determine v_b.

30. Use mesh analysis to find the current through the 1.8 kΩ resistor in the circuit of Figure $6.6.11$.

31. Use mesh analysis to find the current through the $j200\Omega$ inductor in Figure $6.6.12$. $E_1 = 1\angle 0^\circ$, $E_2 = 2\angle 0^\circ$.

32. Given the circuit in Figure $6.6.12$, write the mesh loop equations and determine v_b. Consider using parallel simplification first. $E_1 = 36\angle -90^\circ$, $E_2 = 24\angle -90^\circ$.

33. Given the circuit in Figure $6.6.13$, use mesh analysis to determine v_{cd}. $E_1 = 0.1\angle 0^\circ$, $E_2 = 0.5\angle 0^\circ$.

34. Use mesh analysis to find the current through the 600 Ω resistor in the circuit of Figure $6.6.13$. $E_1 = 9\angle 0^\circ$, $E_2 = 5\angle 40^\circ$.

35. Use mesh analysis to find the current through the $-j200\Omega$ capacitor in the circuit of Figure $6.6.17$. $E_1 = 18\angle 0^\circ$, $E_2 = 12\angle 90^\circ$.

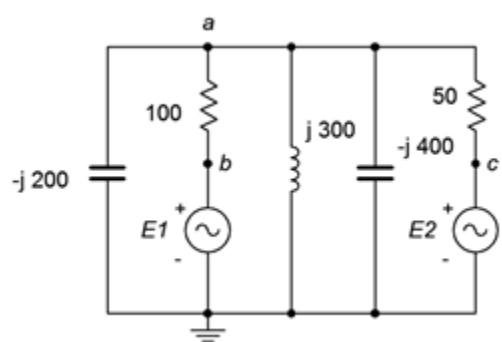

Figure $6.6.17$

36. Given the circuit in Figure $6.6.17$, use mesh analysis to determine v_{ac}. $E_1 = 1\angle 0^\circ$, $E_2 = 500E-3\angle 0^\circ$.

37. Given the circuit in Figure $6.6.14$, use mesh analysis to determine v_c. $E_1 = 10\angle -180^\circ$, $E_2 = 25\angle 0^\circ$.

38. Use mesh analysis to find the current through the 22 kΩ resistor in the circuit of Figure $6.6.14$. $E_1 = 24\angle 0^\circ$, $E_2 = 36\angle 0^\circ$.

39. Use mesh analysis to find the current through the $j300\Omega$ inductor in Figure $6.6.18$. $E_1 = 1\angle 0^\circ$, $E_2 = 10\angle 90^\circ$.

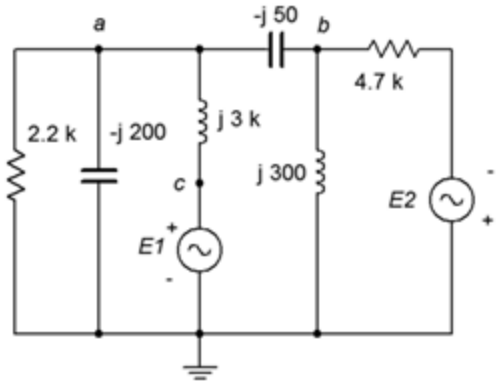

Figure $6.6.18$

40. Given the circuit in Figure $6.6.18$, use mesh analysis to determine v_a. $E_1 = 100\angle 0^\circ$, $E_2 = 90\angle 0^\circ$.

41. Given the circuit in Figure $6.6.15$, use mesh analysis to determine v_{bc}. $E = 10\angle 0^\circ$, R_1 = 1 kΩ, R_2 = 2 kΩ, R_3 = 3 kΩ, $X_C = -j4$ kΩ, $X_L = j8$ kΩ.

42. Use mesh analysis to find the current through resistor R_3 in the circuit of Figure $6.6.15$. $E = 20\angle 0^\circ$, R_1 = 10 kΩ, R_2 = 30 kΩ, R_3 = 1 kΩ, $X_C = -j15$ kΩ, $X_L = j20$ kΩ.

43. Use mesh analysis to find the current through resistor R_3 in Figure $6.6.19$. $E = 60\angle 0^\circ$, R_1 = 1 kΩ, R_2 = 2 kΩ, R_3 = 3 kΩ, $X_C = -j10$ kΩ, $X_L = j20$ kΩ.

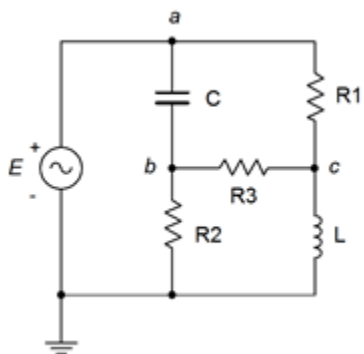

Figure $6.6.19$

44. Given the circuit in Figure $6.6.19$, use mesh analysis to determine v_{bc}. $E = 120\angle 90^\circ$, R_1 = 100 kΩ, R_2 = 20 kΩ, R_3 = 10 kΩ, $X_C = -j5$ kΩ, $X_L = j20$ kΩ.

45. Given the circuit in Figure $6.6.20$, use mesh analysis to determine v_b. Consider using source conversion. $E = 12\angle 0^\circ$, $I = 10E - 3\angle 0^\circ$.

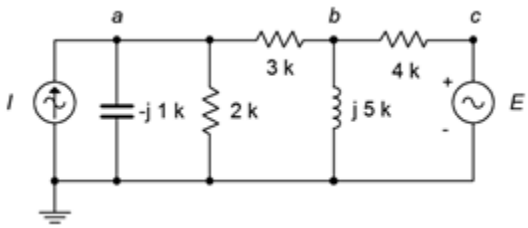

Figure $6.6.20$

46. Use mesh analysis to find the current through the 3 Ω resistor in the circuit in Figure $6.6.20$. Consider using source conversion. $E = 15\angle 90^\circ$, $I = 10E - 3\angle 0^\circ$.

47. Use mesh analysis to find the current through the 2.2 kΩ resistor in the circuit in Figure $6.6.21$. $E = 3.3\angle 0^\circ$, $I = 2.1E - 3\angle 0^\circ$.

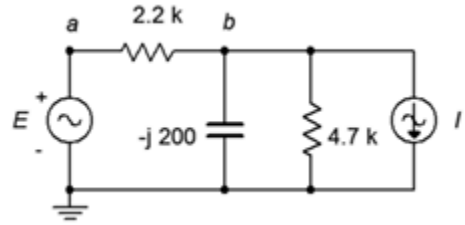

Figure $6.6.21$

48. Given the circuit in Figure $6.6.21$, use mesh analysis to determine v_b. $E = 10\angle 0^\circ$, $I = 30E - 3\angle 90^\circ$.

49. Given the circuit in Figure $6.6.22$, use nodal analysis to determine v_{ab}.

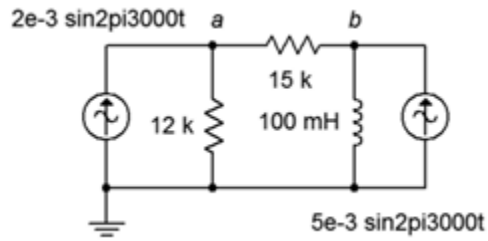

Figure $6.6.22$

50. Use nodal analysis to find the current through the 100 mH inductor in the circuit of Figure $6.6.22$.

51. Use nodal analysis to find the current through the 330 Ω resistor in the circuit of Figure $6.6.23$.

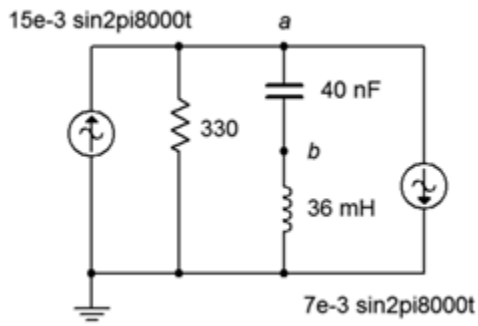

Figure $6.6.23$

52. Given the circuit in Figure $6.6.23$, write the node equations and determine v_b.

53. Given the circuit in Figure $6.6.19$, use nodal analysis to determine v_{bc}. $E = 120\angle 0^\circ$, R_1 = 1 kΩ, R_2 = 2 kΩ, R_3 = 3 kΩ, $X_C = -j10$ kΩ, $X_L = j20$ kΩ.

54. Determine the current through the 10 kΩ resistor in the circuit of Figure $6.6.24$ if $I_1 = 10E - 3\angle -90^\circ$.

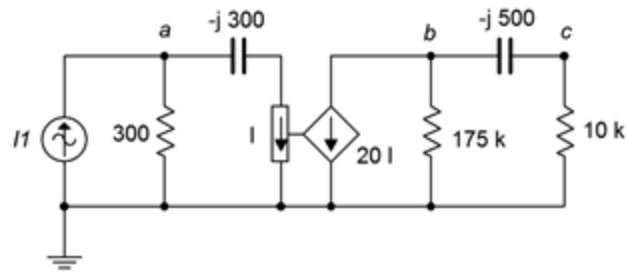

Figure $6.6.24$

55. Determine v_b in the circuit of Figure $6.6.24$ if the source $I_1 = 20E - 3\angle 0^\circ$.

56. Determine v_c in the circuit of Figure $6.6.25$ if the source $E = 3\angle 120^\circ$.

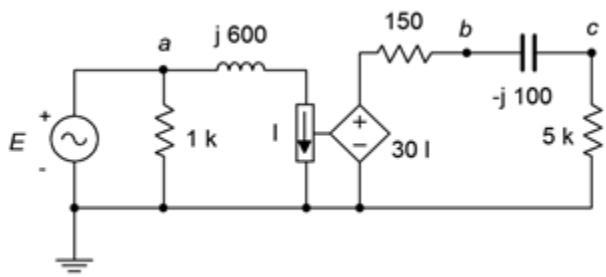

Figure $6.6.25$

57. Determine the current through the 5 kΩ resistor in the circuit of Figure $6.6.25$ if $E = 10\angle 0^\circ$.

58. In the circuit of Figure $6.6.26$, determine the capacitor current if the source $E = 12\angle 0^\circ$.

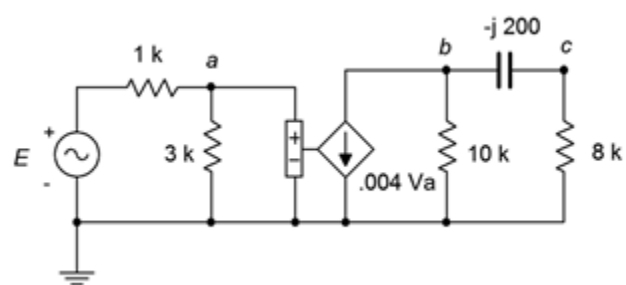

Figure $6.6.26$

59. In the circuit of Figure $6.6.26$, determine v_c if the source $E = 8\angle 90^\circ$.

60. In the circuit of Figure $6.6.27$, determine v_b if the source $E = 12\angle -90^\circ$.

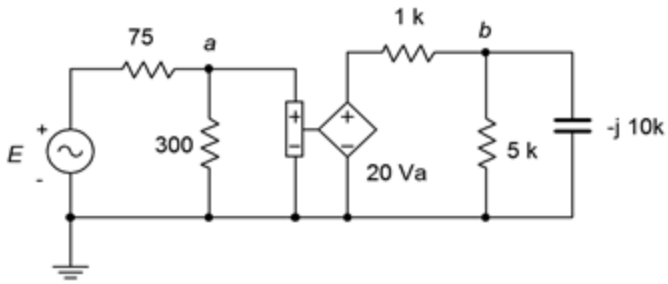

Figure $6.6.27$

61. In the circuit of Figure $6.6.27$, determine the current flowing into the 1 kΩ resistor if the source $E = 6\angle 0^\circ$.

62. In the circuit of Figure $6.6.28$, determine the current flowing into the 600 Ω resistor if $I_1 = 1E - 3\angle 180^\circ$.

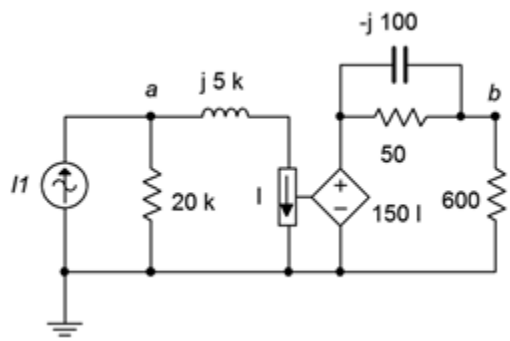

Figure $6.6.28$

63. Determine v_a and v_b in the circuit of Figure $6.6.28$ if the source $I_1 = 2E - 3\angle 0^\circ$.

64. Determine v_a in the circuit of Figure $6.6.29$ if the source $E = 2\angle 0^\circ$.

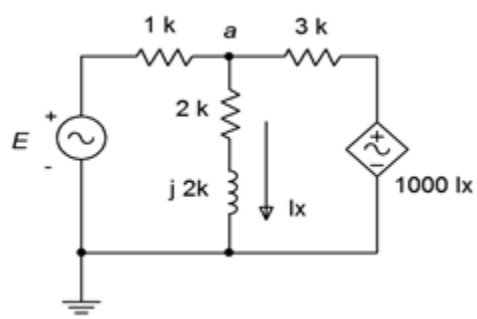

Figure $6.6.29$

65. Given the circuit in Figure $6.6.29$, determine the current flowing through the 1 kΩ resistor. Assume that $E = 15\angle 45^\circ$.

66. Given the circuit in Figure $6.6.30$, determine the current flowing through the 3 kΩ resistor if the source $E = 25\angle 33^\circ$.

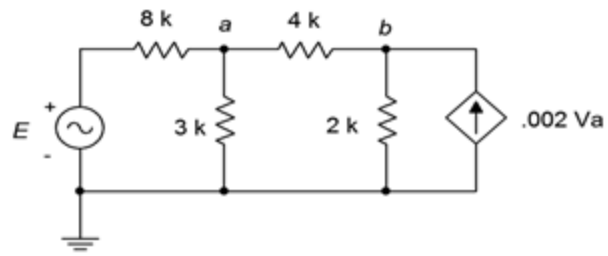

Figure $6.6.30$

67. Given the circuit in Figure $6.6.30$, determine v_{ab}. Assume the source $E = 15\angle -112^\circ$.

68. In the circuit of Figure $6.6.31$, determine v_d.

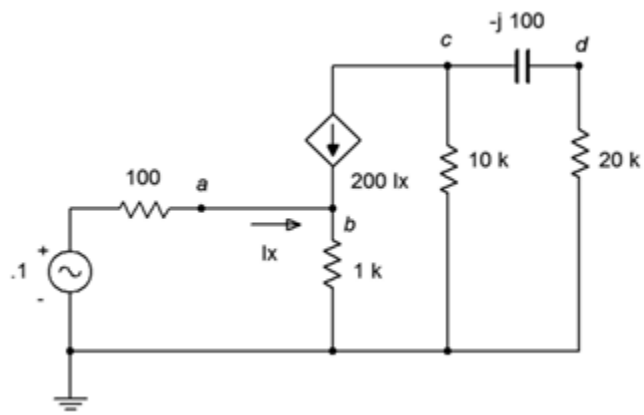

Figure $6.6.31$

69. Given the circuit in Figure $6.6.31$, determine the current flowing through the 1 kΩ resistor.

70. Given the circuit in Figure $6.6.32$, determine the current flowing through the 100 Ω resistor.

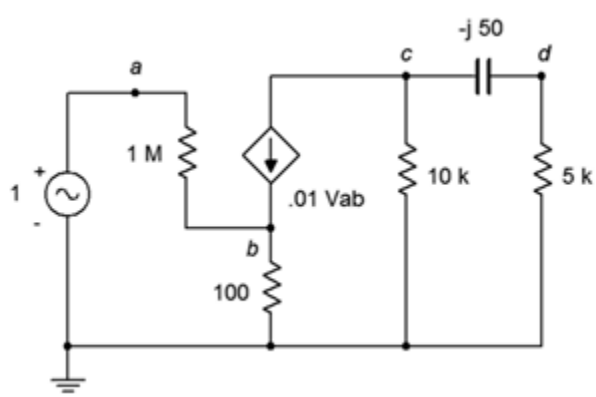

Figure $6.6.32$

71. Determine v_d in the circuit of Figure $6.6.32$.

72. Determine v_{ab} in the circuit of Figure $6.6.33$. $E = 10\angle 0^\circ$

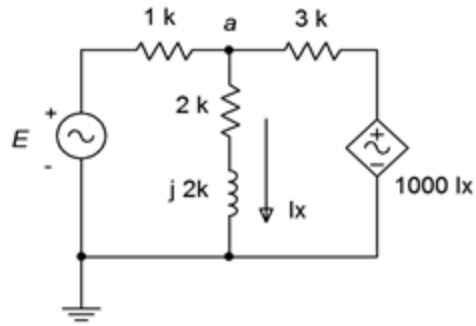

Figure $6.6.33$

Challenge

73. Given the circuit in Figure $6.6.34$, write the node equations. $E_1 = 50\angle 0^\circ$, $E_2 = 35\angle 120^\circ$, $I = 500E - 3\angle 90^\circ$.

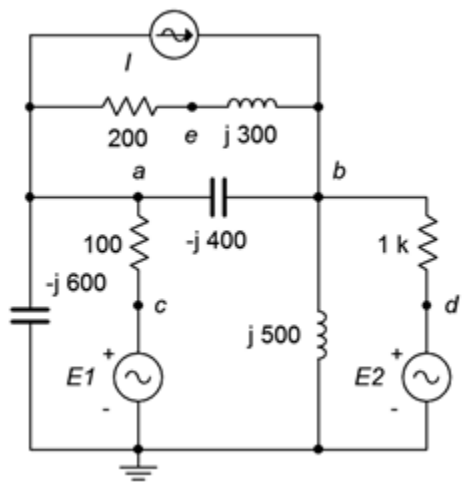

Figure $6.6.34$

74. Given the circuit in Figure $6.6.34$, use either mesh or nodal analysis to determine v_{ed}. $E_1 = 9\angle 0^\circ$, $E_2 = 12\angle 0^\circ$, $I = 50E - 3\angle 0^\circ$.

75. Given the circuit in Figure $6.6.35$, use mesh analysis to determine v_{fc}. $E_1 = 12\angle 0^\circ$, $E_2 = 48\angle 0^\circ$, $E_3 = 36\angle 70^\circ$.

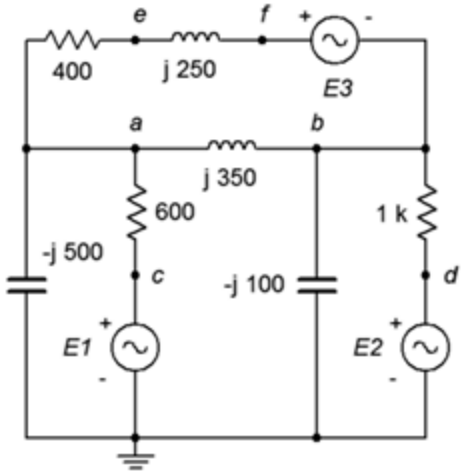

Figure $6.6.35$

76. Find voltage v_{bc} in the circuit of Figure $6.6.36$ using either mesh or nodal analysis. $E = 100\angle 0^\circ$, $R_1 = R_2 = 2$ kΩ, R_3 = 3 kΩ, R_4 = 10 kΩ, R_5 = 5 kΩ, $X_{C1} = X_{C2} = -j2$ kΩ.

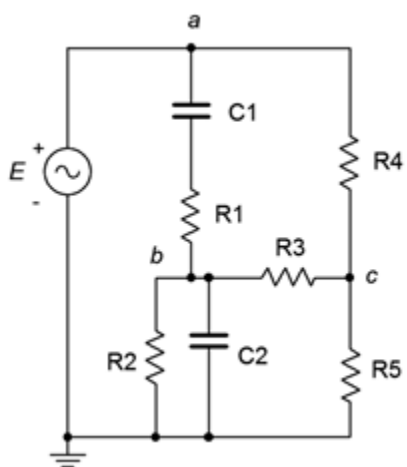

Figure $6.6.36$

77. Given the circuit in Figure $6.6.37$, use nodal analysis to find v_{ac}. $I_1 = 8E - 3\angle 0^\circ$, $I_2 = 12E - 3\angle 0^\circ$, $E = 50\angle 0^\circ$.

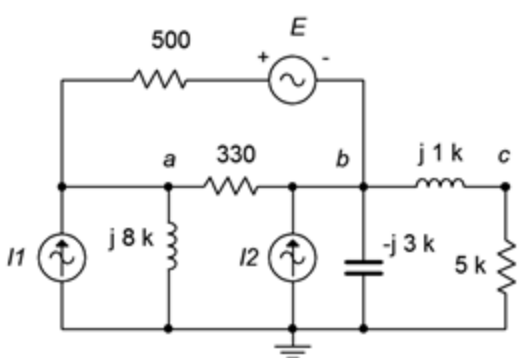

Figure $6.6.37$

78. Given the circuit in Figure $6.6.38$, use nodal analysis to determine v_{ad}. $I_1 = 0.1\angle 0^\circ$, $I_2 = 0.2\angle 0^\circ$, $I_3 = 0.3\angle 0^\circ$.

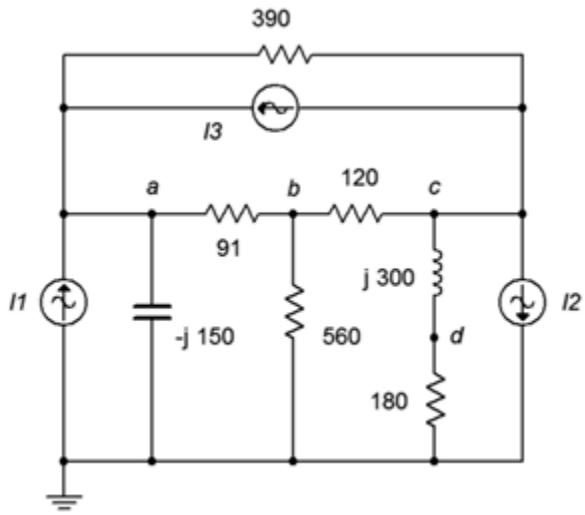

Figure $6.6.38$

79. Given the circuit in Figure $6.6.39$, determine v_{ad}. $E_1 = 15\angle 0^\circ$, $E_2 = 6\angle 0^\circ$, $I = 100E - 3\angle 0^\circ$.

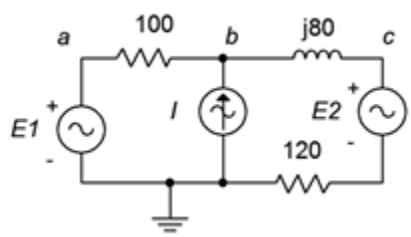

Figure $6.6.39$

80. Given the circuit in Figure $6.6.40$, determine v_{ad}. $E_1 = 22\angle 0^\circ$, $E_2 = -10\angle 0^\circ$, $I = 2E - 3\angle 0^\circ$.

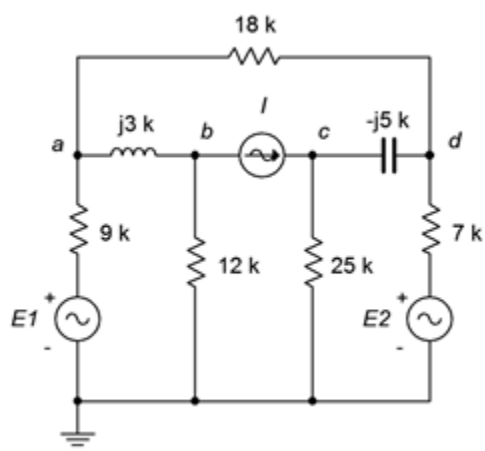

Figure $6.6.40$

81. Given the circuit in Figure $6.6.41$, determine v_{ab}. $I_1 = 1.2\angle 0^\circ$, $I_2 = 2\angle 120^\circ$, $E = 75\angle 0^\circ$.

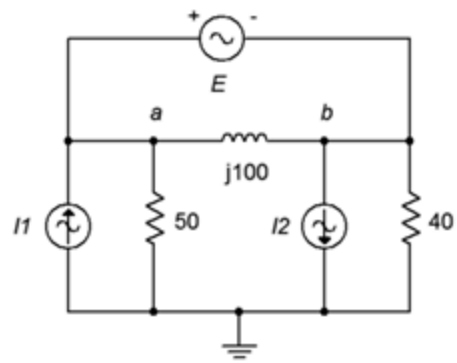

Figure $6.6.41$

82. Given the circuit in Figure $6.6.42$, determine v_{ad}. $I_1 = 0.8\angle 0^\circ$, $I_2 = 0.2\angle 180^\circ$, $I_3 = 0.1\angle 0^\circ$, $E = 15\angle 0^\circ$.

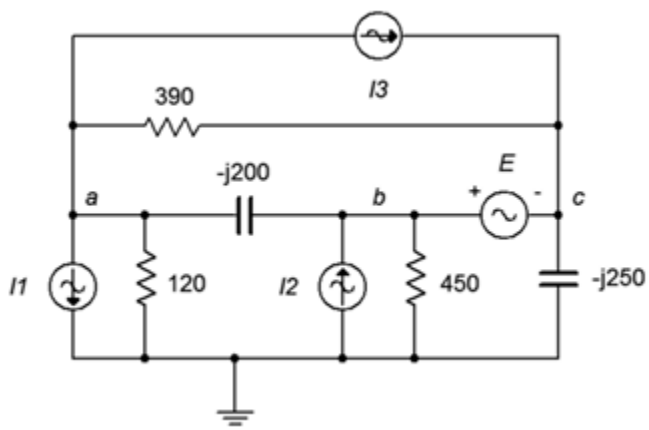

Figure $6.6.42$

Simulation

83. Perform a transient analysis simulation on the circuit of problem 25 (Figure $6.6.16$) to verify the results for v_b.

84. Investigate the variation of v_b due to frequency in problem 25 (Figure $6.6.16$) by performing an AC simulation. Run the simulation from 10 Hz up to 100 kHz.

85. Investigate the variation of v_b due to component tolerance in problem 25 (Figure $6.6.16$) by performing a Monte Carlo simulation. Apply a 10% tolerance to the resistors and capacitor.

86. Perform a transient analysis simulation on the circuit of problem 28 (Figure $6.6.10$) to verify the results for v_c.

87. Investigate the variation of v_b due to frequency in problem 28 (Figure $6.6.10$) by performing an AC simulation. Run the simulation from 1 Hz up to 10 kHz.

88. Investigate the variation of v_b due to component tolerance in problem 28 (Figure $6.6.10$) by performing a Monte Carlo simulation. Apply a 10% tolerance to the resistors and capacitors.

This page titled 6.6: Exercises is shared under a CC BY-NC-SA 4.0 license and was authored, remixed, and/or curated by James M. Fiore via source content that was edited to the style and standards of the LibreTexts platform.

7: AC POWER

Learning Objectives

After completing this chapter, you should be able to:

- Describe current, voltage and power relationships in AC RLC networks.
- Plot and make use of the power triangle to determine real, apparent and reactive power components in an AC power system.
- Compute the power factor of an RLC network.
- Determine necessary components for basic power factor correction.
- Perform basic power calculations for systems involving power factor and efficiency.

7.1: Introduction

7.2: Power Waveforms

7.3: Power Triangle

7.4: Power Systems

7.5: Summary

7.6: Exercises

This page titled 7: AC Power is shared under a CC BY-NC-SA 4.0 license and was authored, remixed, and/or curated by James M. Fiore via source content that was edited to the style and standards of the LibreTexts platform.

7.1: Introduction

This chapter introduces the concept of power and power waveforms in AC systems. This is an important part of AC circuit analysis and turns out to have striking differences compared to the DC counterpart. While it remains true that power is the product of current and voltage, a naive application of that definition can lead to erroneous conclusions for the AC case. In Chapter 1, RMS (i.e., root-mean-square) values were defined and explained. As a general rule, RMS values are used for power calculations, not peak or peak-to-peak values. Further, while complex non-sinusoidal waveshapes are a decided possibility in electronic systems, we shall limit ourselves here to sinusoids.

One of the tools we shall use is the power triangle. This is a simple trigonometric device designed to illustrate the power relations between resistive and reactive components in a complex impedance. One of its parameters is the power factor, PF. As we shall see, ordinarily we like the power factor to be unity as this implies best use of the available current. It turns out that this is not the case in many systems. As a consequence, we shall also investigate a simple means of compensating or shifting the power factor back to unity. This is known as power factor correction.

As part of our discussion involving power factor, we shall examine typical applications such as motors. Here we shall consider the power factor of a motor along with its efficiency. The efficiency is defined as the useful output power relative to the supplied power and is always less than 100%. Finally, we shall consider basic power factor correction for this application.

One practical item to remember here is that, while the instantaneous power changes over time due to the sinusoidal cycling of the voltage and current, what matters to most electrical and electronic devices is the production of internal heat. Devices such as resistors, transistors and so forth, have mass, and thus exhibit a thermal time constant. That time constant tends to be much longer than the period of the wave. The effect is an averaging of the power waveform. In other words, components do not heat up and cool down instantaneously, any more than a hot fry pan would drop to room temperature the moment it was removed from its burner.

This page titled 7.1: Introduction is shared under a CC BY-NC-SA 4.0 license and was authored, remixed, and/or curated by James M. Fiore via source content that was edited to the style and standards of the LibreTexts platform.

7.2: Power Waveforms

Computation of power in AC systems is somewhat more involved than the DC case due to the phase between the current and voltage. It has been stated in prior work that power dissipation is characteristic of resistors, and that ideal inductors and capacitors do not dissipate power. We shall show precisely why this is the case by examining three distinct cases for AC circuits: purely resistive, purely reactive and complex impedance.

Resistive Load

First, consider the case of the purely resistive load, that is, a load with a phase angle of 0 degrees. To determine the power, we simply multiply the voltage by the current. Recall that the basic expression for a sine wave voltage without a DC offset is:

$$v(t) = V\sin(2\pi ft + \theta)$$

where

- $v(t)$ is the voltage at some time t,
- V is the peak value,
- f is the frequency,
- θ is the phase shift.

We know that the current and voltage are always in phase for a resistor, and thus θ is zero degrees. Thus, the expression for a sinusoidal current is similar, using I in place of V for the peak current. We multiply the current and voltage together to arrive at an expression for power[1]:

$$\begin{aligned} P(t) &= v(t) \times i(t) && (7.2.1)\\ &= V\sin(2\pi ft) \times I\sin(2\pi ft) && (7.2.2)\\ &= VI\left(\frac{1}{2} - \frac{1}{2}\cos(2\pi 2ft)\right) && (7.2.3)\\ &= \frac{VI}{2} - \frac{VI}{2}\cos(2\pi 2ft) && (7.2.4) \end{aligned}$$

The final expression is made of two parts; the first portion which is fixed (not a function of time) and the second portion which consists of a negative cosine wave at twice the original frequency. This can be visualized as a time shifted sine wave that is riding on a DC level which is equal to the peak value of the new sinusoid. This is shown in Figure $7.2.1$ using current and voltage peaks normalized to unity. In this figure, the current waveform (green) is drawn just slightly above its true value so that it may be seen easily next to the otherwise identical red voltage waveform.

The power product is shown in blue. Unless the frequency is ridiculously low, the resistor's heating will respond to the average value of this waveform thanks to the device's thermal time constant. Due to the fact that sinusoids are symmetrical around zero, the effective power dissipation averaged over time will be the offset value, or $VI/2$. For example, a one volt peak source delivering a current of one amp peak, as shown here, should generate $VI/2$, or 0.5 watts. This crosschecks nicely with the RMS calculation of roughly 0.707 volts RMS times 0.707 amps RMS also yielding 0.5 watts.

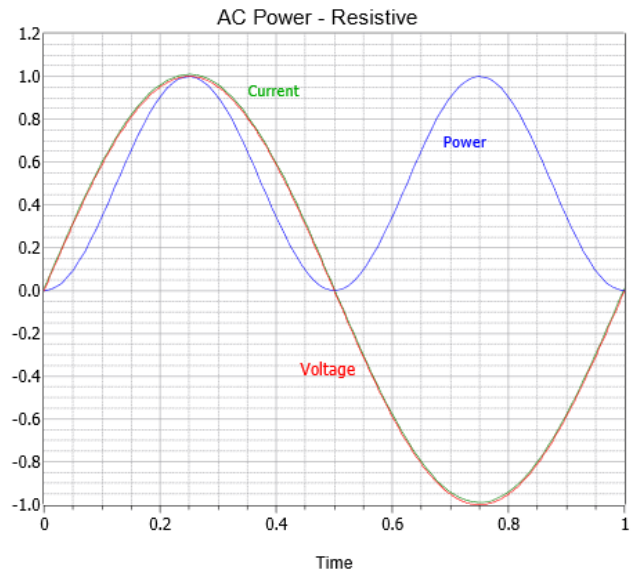

Figure 7.2.1: Waveforms for a resistive load (the current is shifted slightly positive to ease viewing).

Reactive Load

The situation is considerably different if the load is purely reactive. For a load consisting of just an inductor, the voltage leads the current by 90 degrees. This is equivalent to a cosine wave. Once again, we multiply the voltage by the current to arrive at an expression for power:

$$P(t) = V\cos 2\pi ft \times I\sin 2\pi ft \tag{7.2.5}$$

$$= VI\left(\frac{1}{2}\sin 2\pi 2ft\right) \tag{7.2.6}$$

$$= \frac{VI}{2}\sin 2\pi 2ft \tag{7.2.7}$$

Note that this expression does not contain a constant term and only contains a time-varying term. Consequently, without an offset, there is no net power dissipation. The result is shown in Figure 7.2.2. Here power is being alternately generated and dissipated (i.e., positive values indicate dissipation while negative values indicate generation). In this respect, the reactive element can be thought of as alternately storing and releasing energy in the manner of an ideal spring being compressed and then released.

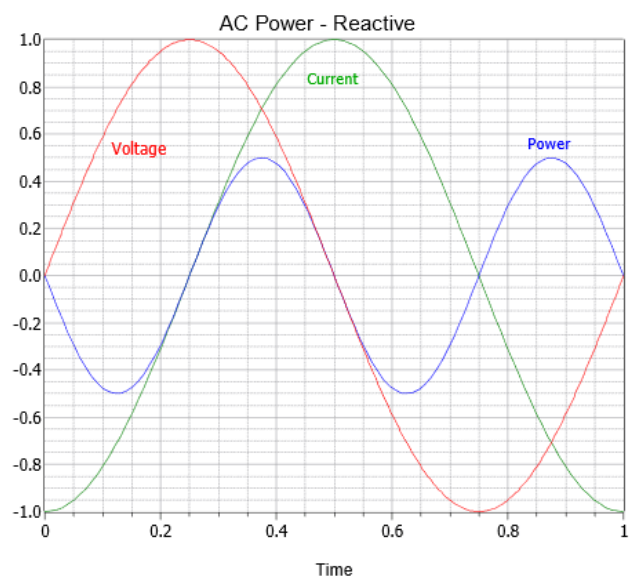

Figure 7.2.2: Waveforms for a purely reactive load.

Complex Impedance Load

Finally, we come to the case of a complex load, part resistive and part reactive. Given some phase angle, θ, we have:

$$P(t) = V \sin 2\pi ft \times I \sin(2\pi ft + \theta) \tag{7.2.8}$$

$$= VI\left(\frac{1}{2}\cos\theta - \frac{1}{2}\cos(2\pi 2ft + \theta)\right) \tag{7.2.9}$$

$$= \frac{VI}{2}\cos\theta - \frac{VI}{2}\cos(2\pi 2ft + \theta) \tag{7.2.10}$$

This expression contains both a constant term and a time varying term, like the case for the purely resistive load shown in Equation 7.2.4. There is, however, an important distinction. The constant term is multiplied by the cosine of the impedance angle, a value whose magnitude ranges from 0 up to 1. Therefore, unless θ is zero, the offset will not equal the peak value of the sinusoidal portion. This is a particularly important point which shall be amplified in a moment.

Example waveforms using $\theta = 45^\circ$ are shown graphically in Figure 7.2.3. The power waveform dips slightly below zero but is not symmetrical around the time axis. Consequently, there is some power dissipation but not as much as in the purely resistive case. In short, the long term power average is now a function of the phase angle, θ. As cosine θ may range between 0 and 1, the power for the complex impedance case will never be more than that of the purely resistive version. Indeed, we can see that Equation 7.2.10 is the general case. If the load is purely resistive then θ is zero, and Equation 7.2.10 reduces to Equation 7.2.4. Similarly, if the load is purely reactive then θ is ± 90 degrees, and Equation 7.2.10 reduces to Equation 7.2.7.

While this analysis used an inductive load, the same can be said regarding the capacitive case (simply swap the labels for the current and voltage waveforms). Finally, in the equations above, V and I are peak values. If RMS values are used, there is no need to divide VI by 2.

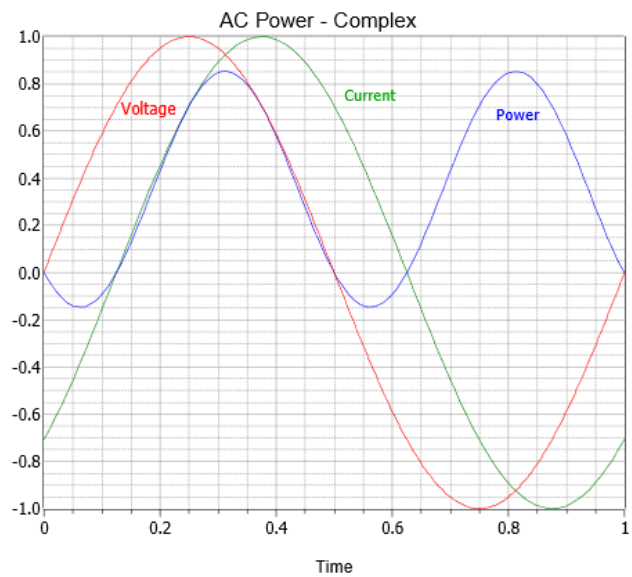

Figure 7.2.3: Waveforms for a complex impedance load.

At this point we can see that resistors dissipate true power but that reactive components do not. This raises a practical problem, namely, what to call the currentvoltage product for purely reactive or complex loads. That is, we can't lump together the current-voltage values for an inductor with those of a resistor any more than we would simply add the magnitudes of resistance and reactance. The practical solution is that we refer to the “power” in reactive components as reactive power. Reactive power uses the symbol Q. Further, the units are not watts, but volt-amps reactive, or more commonly, VAR[2]. Continuing, for a complex impedance we refer to apparent power. It uses the symbol S and has units of volt-amps, abbreviated VA. It is called apparent power because it appears to be the power if you naively multiply the value obtained from a voltmeter by the value obtained from an ammeter. Those devices would not account for the phase angle between the voltage and current, unlike a proper power meter, and their product would not be the true power. The various power terms are summarized in Figure 7.2.4.

Figure 7.2.4: (TABLE) Symbols and units for power quantities.

Quantity	Symbol	Unit, Abbreviation
Power	P	watts, W
Apparent Power	S	volt-amps, VA
Reactive Power	Q	volt-amps reactive, VAR

A few examples are in order to help solidify these concepts.

Example 7.2.1

Determine the power dissipated by the resistor in the circuit of Figure 7.2.5. Also find the apparent power drawn by the circuit and the reactive power of the inductor. The source frequency is 1 kHz.

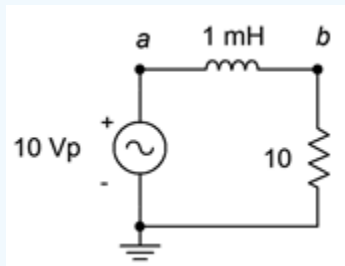

Figure 7.2.5: Circuit for Example 7.2.1.

The first item is to find the reactance of the inductor.

$$X_L = 2\pi f L$$

$$X_L = 2\pi 1kHz 1mH$$

$$X_L = j6.283\Omega$$

There are several ways to find power. In a series loop like this, the most direct is to use the i^2R forms. The source current can be found via Ohm's law. As power calculations utilize RMS values, first find the RMS value of the source voltage.

$$v_{RMS} = \frac{v_{peak}}{\sqrt{2}}$$

$$v_{RMS} = \frac{10V}{\sqrt{2}}$$

$$v_{RMS} \approx 7.07V$$

$$i = \frac{v}{Z}$$

$$i = \frac{7.07V}{10 + j6.283\Omega}$$

$$i = 0.5986\angle -32.1^\circ A$$

For the power calculations, we shall only use the magnitudes of the voltage and current. Here, the symbol "||" refers to just the magnitude of the reactance or impedance.

$$P = i^2R$$

$$P = (0.5986A)^2 10\Omega$$

$$P \approx 3.58W$$

$$Q = i^2|X|$$

$$Q = (0.5986A)^2 6.283\Omega$$

$$Q \approx 2.25 \text{ VAR, inductive}$$

$$S = i^2|Z|$$

$$S = (0.5986A)^2|10 + j6.283\Omega|$$

$$S \approx 4.23 \text{ VA, inductive}$$

Computer Simulation

The circuit of Figure 7.2.5 is captured in a simulator as shown in Figure 7.2.6. Three different transient analysis simulations are run.

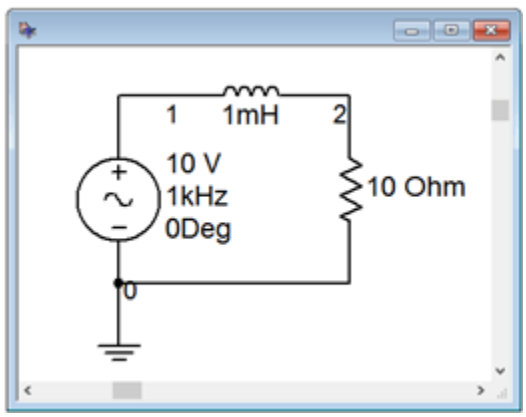

Figure 7.2.6: The circuit of Figure 7.2.5 in a simulator.

The first simulation plots the circulating current (green), the resistor voltage (red) and their product (the power, in blue). This is shown in Figure 7.2.7. We can see that current and voltage are perfectly in phase, as expected. Also, the power waveform ranges from zero up to about 7 watts. The average of this is approximately half of the peak-to-peak, or about 3.5 watts, just as calculated.

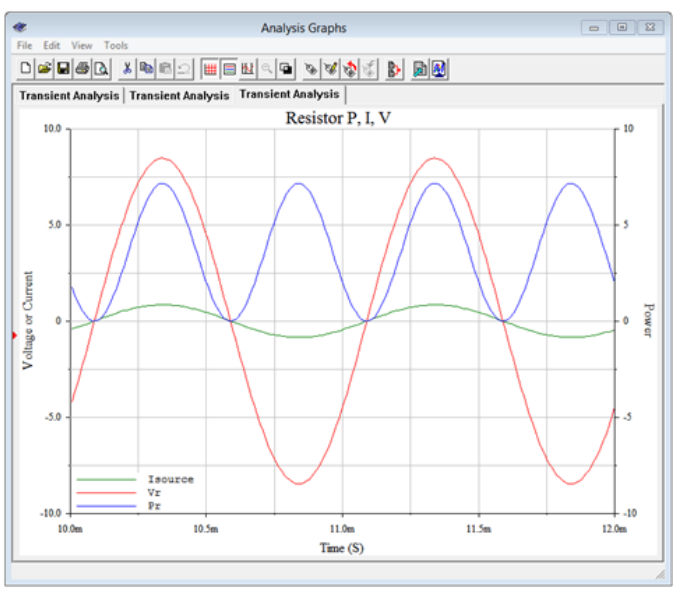

Figure 7.2.7: Transient analysis for the resistor of Figure 7.2.5.

The power value can also be computed from voltage times current as a crosscheck. The voltage across the resistor can be found via the voltage rule, and its magnitude is approximately 5.986 volts RMS. Multiplying this by the RMS current will also yield 3.58 watts.

It is instructive to compare these curves to those generated in Figure $7.2.1$ for the general resistive case. The current and voltage values in Figure $7.2.1$ were normalized to unity so they do not appear to be identical to those of Figure $7.2.7$, however, the important part is that the phase relationships are the same along with the position of the power waveform. In both cases the power waveform ranges from a minimum of zero up to some maximum value. Consequently, its average value must be half of its peak-to-peak value.

A second set of plots is generated for the inductor. This is shown in Figure $7.2.8$. Again, compare this set against the curves seen in Figure $7.2.2$ for the general reactive case. We can see that the current (green) is 90 degrees out of phase with the inductor's voltage (red) and lagging, as expected. More importantly, we see that the power waveform (blue) is centered around zero. The full cycle average of this is zero, meaning that no power is dissipated. But how does this square with the 2.25 VAR reactive power that was calculated for the inductor? A close look at the power plot shows that that value corresponds to the maximum value of the reactive power waveform (i.e., half of its peak-to-peak value).

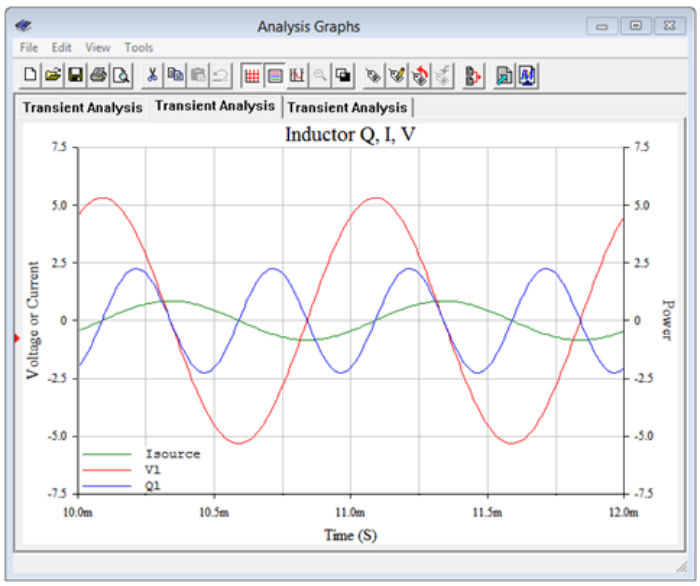

Figure $7.2.8$: Transient analysis for the inductor of Figure $7.2.5$.

Finally, a third set of curves are created for the circuit as a whole. In other words, now we're treating the series combination of the inductor and resistor as the load. The results are illustrated in Figure $7.2.9$.

The computed impedance phase angle was lagging at 32.1 degrees. We can see this same shift between the voltage (red) and current (green) waveforms. The interesting bit here is the offset and amplitude of the power waveform (blue). The waveform has a peak-to-peak value of about 8.5 VA. Once again, the computed value for apparent power, S, works out to one-half of the plotted peak-to-peak value. This will be the case for P, Q and S. Further, it turns out that if we find the full cycle average of this waveform, those small negative peaks would subtract from the total area and reduce the value. The result would be the true power of 3.58 watts. We'll look at this more closely following another example.

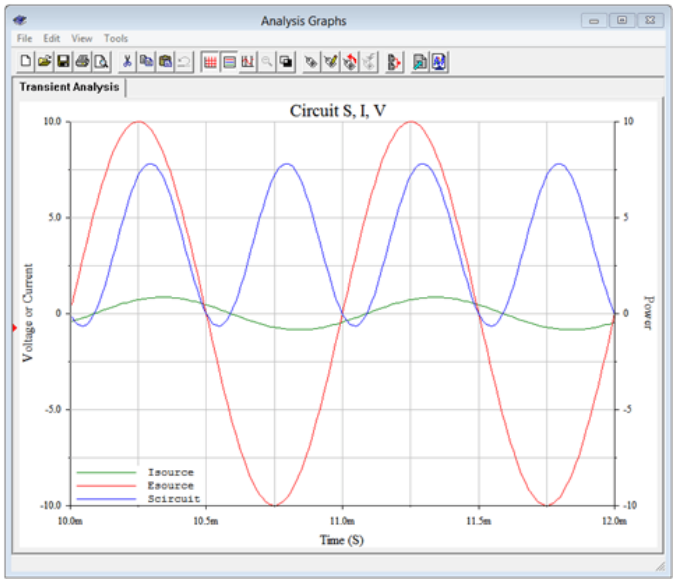

Figure 7.2.9: Transient analysis for the resistor and inductor together in Figure 7.2.5.

Example 7.2.2

Determine the power dissipated by the resistor in the circuit of Figure 7.2.10. Also find the apparent power drawn by the circuit and the reactive power of the capacitor. The source frequency is 1 kHz.

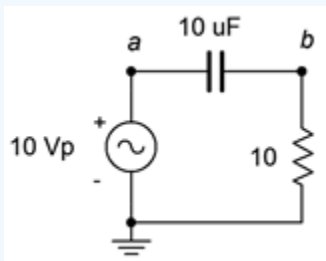

Figure 7.2.10: Circuit for Example 7.2.2.

The first item is to find the reactance of the capacitor.

$$X_C = \frac{1}{2\pi f C}$$

$$X_C = \frac{1}{2\pi 1kHz 1\mu F}$$

$$X_C = -j15.92\Omega$$

Unlike the the previous example, we shall use the v^2/R forms for power as an alternative. The RMS value of the source voltage is 7.07 volts. First, find v_R.

$$v_R = E\frac{R}{R - jX_C}$$

$$v_R = 7.07V\frac{10\Omega}{10 - j15.92\Omega}$$

$$v_R = 3.761\angle 57.9^\circ V$$

The capacitor voltage is found via KVL:

$$v_C = E - v_R$$

$$v_C = 7.07\angle 0^\circ - 3.761\angle 57.9^\circ V$$

$$v_C = 5.99\angle -32.1^\circ V$$

For the powers, we just use the magnitude of the voltage.

$$P = \frac{v^2}{R}$$

$$P = \frac{(3.761V)^2}{10\Omega}$$

$$P \approx 1.414W$$

$$Q = \frac{i^2}{|X|}$$

$$Q = \frac{(5.99V)^2}{15.92\Omega}$$

$$Q \approx 2.25 \text{ VAR, capacitive}$$

$$S = \frac{E^2}{|Z|}$$

$$S = \frac{(7.07V)^2}{|10 - j15.92\Omega|}$$

$$S \approx 2.66 \text{ VA, capacitive}$$

Computer Simulation

In order to verify the results, the circuit of Figure 7.2.10 is captured in a simulator as shown in Figure 7.2.11. Once again, three different transient analysis simulations are run; one each for the resistor, the capacitor, and the pair together.

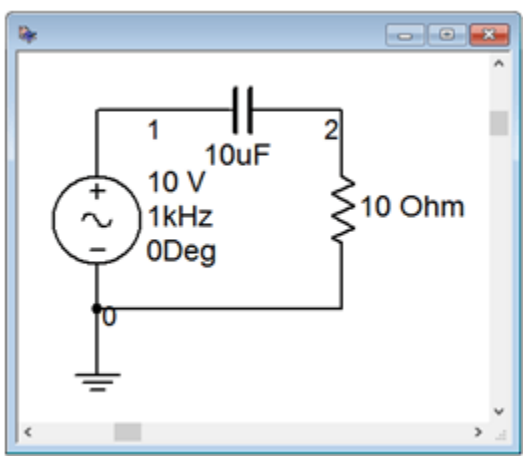

Figure 7.2.11: The circuit of Figure 7.2.10 in a simulator.

In Figure 7.2.12 we see the results of a transient analysis run on the resistor. We can see that the voltage and current are in phase. Also, the power waveform swings from zero up to around 2.8 watts or so. This corresponds to an average value of just under 1.5 watts, and this agrees nicely with the computed result.

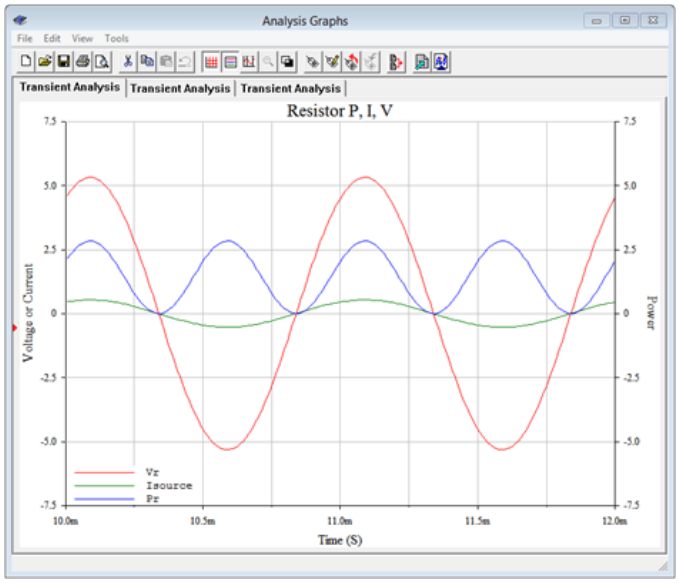

Figure 7.2.12: Transient analysis for the resistor of Figure 7.2.11.

Figure 7.2.13 illustrates the results from a transient analysis run on the capacitor. As expected, the current is leading the voltage by 90 degrees. We can also see that the power waveform is swinging symmetrically around zero, meaning that there is no net power dissipation. The peak value is just under 2.5 VAR, aligning nicely with the calculated value.

Finally, in Figure 7.2.14 we have the results of a transient analysis using both the capacitor and the resistor as the load. The current waveform is still leading the voltage, but by less than 90 degrees. In fact, it leads by about 2/3rds of a division, some 60° or so, which conforms nicely to the expected impedance angle of -57.9° (i.e. from $10 - j15.92\Omega$). The power waveform sits slightly below the horizontal axis indicating it is neither true power nor reactive power, but a combination. The peak-to-peak value is somewhat over 5 units, indicating an apparent power of just over 2.5 VA, again, just as expected.

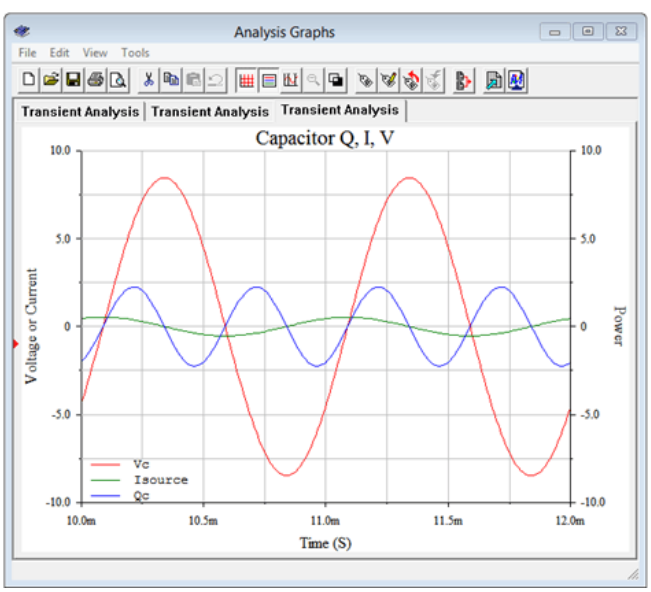

Figure 7.2.13: Transient analysis for the capacitor of Figure 7.2.11.

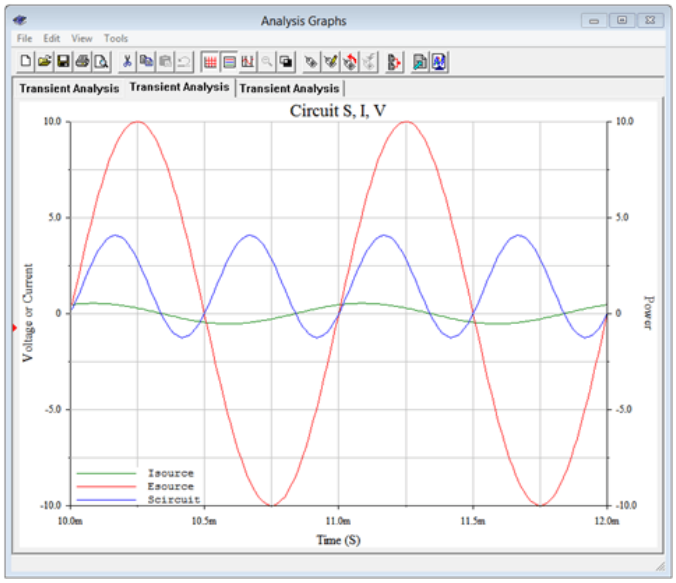

Figure 7.2.14: Transient analysis for the resistor and capacitor together in Figure 7.2.11.

References

[1]A useful trigonometric identity here is $(\sin x)^2 = 1/2 - 1/2 \cos 2x$

[2]For the plural form, some sources use “VARs” while others use “VAR”. We shall use the latter.

This page titled 7.2: Power Waveforms is shared under a CC BY-NC-SA 4.0 license and was authored, remixed, and/or curated by James M. Fiore via source content that was edited to the style and standards of the LibreTexts platform.

7.3: Power Triangle

The prior section revealed that the phase angle between the current and voltage cannot be ignored when computing power. For example, if a 120 volt RMS source delivers 2 amps of current, it appears that it delivers 240 watts. This is only true if the load is purely resistive. For a complex load, the true power is somewhat less. In fact, as we've just seen, if the load is purely reactive, there will be no true load power at all.

Although plotting the current, voltage and power waveforms is instructive, it can be somewhat cumbersome. Instead, we use a power triangle as shown in Figure 7.3.1. The horizontal axis represents true power, P, in watts. The vertical axis represents reactive power, Q, in VAR. The vector combination of P and Q results in the apparent power, S, in VA. Remember, the apparent power is the product of the magnitudes of the current and voltage. This is what the power "appears to be" based on simple current and voltage measurements from a DMM, versus a proper power meter. In the resistive case, there is no reactive power and thus S and P are the same. Consequently, the S vector collapses onto the P vector. In a purely reactive case, there is no true power and S and Q are the same; both vectors identical and vertical. For the complex case, S is the vector sum of P and Q. This simple graphic nicely encapsulates the relationship between the three vectors. Further, given any two of the four parts (three vector magnitudes and θ) and with just a little trigonometry, the other two parts may be found.

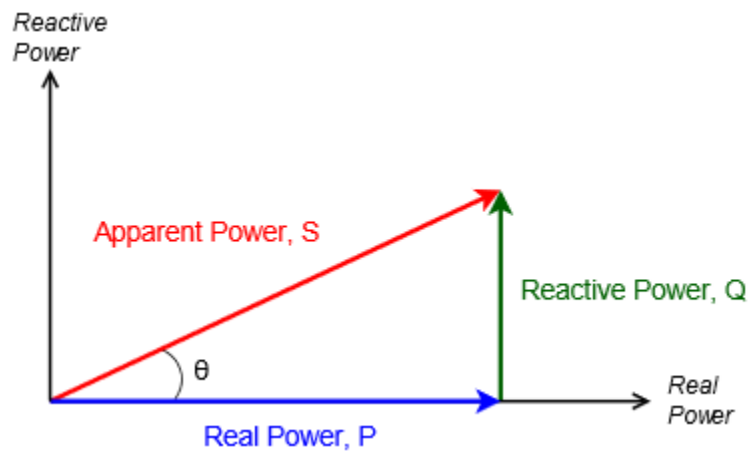

Figure 7.3.1: The power triangle.

For example, knowing the real and reactive powers, the apparent power can be found via the Pythagorean theorem. Similarly, if the apparent power and angle are known, the real and reactive powers may be found using sine and cosine. Remember, apparent power can be found from the product of the RMS voltage and current magnitudes for any complex impedance, and θ is the same as the impedance angle (i.e., the voltage angle minus the current angle). For your convenience, some useful power triangle relationships are listed following.

$$S = v_{RMS} \times i_{RMS} \tag{7.3.1}$$

$$S = \sqrt{P^2 + Q^2} \tag{7.3.2}$$

$$\theta = \tan^{-1} \frac{Q}{P} \text{ (i.e., the impedance angle)} \tag{7.3.3}$$

$$P = S \cos \theta \tag{7.3.4}$$

$$P = \sqrt{S^2 - Q^2} \tag{7.3.5}$$

$$Q = S \sin \theta \tag{7.3.6}$$

$$Q = \sqrt{S^2 - P^2} \tag{7.3.7}$$

Power Factor

As we are often interested in the true power, it is worth noting that a rearrangement of Equation 7.3.4 shows that the ratio of true power to apparent power is the cosine of the impedance angle, $P/S = \cos\theta$. This is known as the power factor and is abbreviated PF. Thus, $PF = \cos\theta$. Knowing the phase angle and the apparent power, true power can be calculated. If PF is positive it is said to be a lagging power factor. This is the case for inductive loads where the current is lagging the voltage. In contrast, a capacitive load results in a negative or leading PF. Recall that for capacitors, current leads the voltage. The sign is only used to indicate leading or lagging and will be useful when we examine power factor correction, shortly. For example, if a 100 volt RMS source delivers 1 amp for an apparent power of 100 VA and the phase angle is -30°, PF is $\cos(-30^\circ)$ or 0.866 leading and the true power is $P = 100\cos(-30^\circ) = 86.6$ watts.

$$PF = \frac{P}{S} = \cos\theta \text{ (positive is lagging and inductive)} \tag{7.3.8}$$

Example 7.3.1

Find S, P and Q in the circuit of Figure 7.3.2. $E = 120$ volts RMS. The source frequency is 60 Hz.

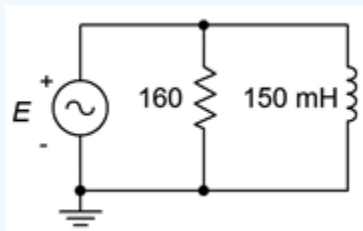

Figure 7.3.2: Circuit for Example 7.3.1.

The first step is to determine the inductive reactance.

$$X_L = 2\pi f L$$

$$X_L = 2\pi 60Hz150mH$$

$$X_L = j56.55\Omega$$

From here we can determine the system impedance which will, in turn, allow us to determine the source current.

$$Z = \frac{R \times jX_L}{R + jX_L}$$

$$Z = \frac{160\Omega \times (j56.55\Omega)}{160\Omega + j56.55\Omega}$$

$$Z = 53.3\angle 70.5^\circ\Omega$$

$$i_{source} = \frac{e_{source}}{Z}$$

$$i_{source} = \frac{120\angle 0^\circ V}{53.3\angle 70.5^\circ\Omega}$$

$$i_{source} = 2.252\angle -70.5^\circ A$$

The apparent power is the product of the magnitudes of circuit voltage and current.

$$S = E \times i_{source}$$

$$S = 120V \times 2.252A$$

$$S = 270.1 \text{ VA, inductive}$$

$$P = S\cos\theta$$

$$P = 270.1VA\cos 70.5^\circ$$

$$P = 90W$$

$$Q = S\sin\theta$$

$$Q = 270.1VA\sin 70.5^\circ$$

$$Q = 254.7 \text{ VAR, inductive}$$

As a crosscheck, the true power can also be determined by squaring the RMS voltage and then dividing by the 160 Ω resistance. Similarly, dividing the squared voltage by X_L will generate Q.

$$P = \frac{v_R^2}{R}$$

$$P = \frac{120V^2}{160\Omega}$$

$$P = 90W$$

The power triangle for this circuit is shown in Figure $7.3.3$.

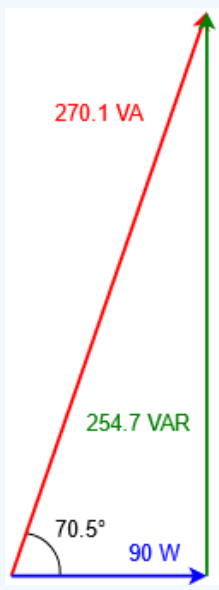

Figure $7.3.3$: Power triangle for the circuit of Figure $7.3.2$.

Power Factor Correction

One issue with a reactive load is that the current is higher than it needs to be in order to achieve a certain true load power. This is wasteful and would require larger conductors. To alleviate these issues, an opposite reactance can be added to the load such that the resulting load is purely resistive. This can be realized by determining the original Q value and then adding a sufficient reactance to produce an additional Q of the opposite sign resulting in cancellation. From there, it is short step to determine the required impedance. Then, knowing the frequency, the required capacitance or inductance can then be found using the appropriate reactance formula. This is illustrated in the following example.

Example 7.3.2

Find circuit PF, S, P and Q for Figure 7.3.4. $E = 20\angle 0^\circ$ volts peak at a frequency of 10 kHz. Also find an appropriate component which when placed from node a to ground brings PF to unity.

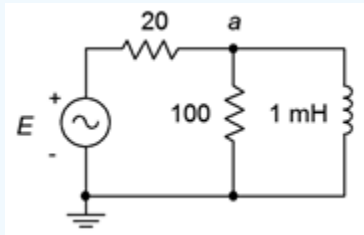

Figure 7.3.4: Circuit for Example 7.3.2.

The inductive reactance of 1 mH at 10 kHz is $j62.83\Omega$. This is in parallel with the 100 Ω resistor, which is then in series with the 20 Ω resistor.

$$Z = 20\Omega + (100\Omega || j62.83\Omega)$$

$$Z = 20\Omega + (28.3 + j45\Omega)$$

$$Z = 66\angle 43^\circ \Omega$$

This time we shall use peak values to illustrate the difference compared to using RMS values as in the previous example. The source current is:

$$i_{source} = \frac{E}{Z}$$

$$i_{source} = \frac{20\angle 0^\circ V}{66\angle 43^\circ \Omega}$$

$$i_{source} = 0.303\angle -43^\circ A \text{ peak}$$

To find S, multiply the magnitudes of source voltage and current. As these are peak values, multiply each by 0.707 to arrive at RMS, or just cut the answer in half (i.e., 0.707^2 is 0.5). This is the apparent power of the whole circuit.

$$S = \frac{E \times i_{source}}{2}$$

$$S = \frac{20V \times 0.303A}{2}$$

$$S = 3.03 \text{ VA, inductive}$$

$$P = S\cos\theta$$

$$P = 3.03VA\cos 43^\circ$$

$$P = 2.22W$$

To be clear, 2.22 watts is the combined power dissipation between the two resistors.

$$Q = S\sin\theta$$

$$Q = 3.03VA\sin 43^\circ$$

$$Q = 2.07 \text{ VAR, inductive}$$

The power triangle for this circuit is shown in Figure 7.3.5.

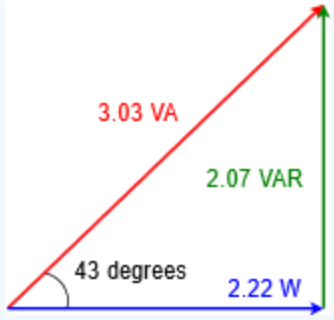

Figure $7.3.5$: Power triangle for the circuit of Figure $7.3.4$.

For the second part involving power factor correction, we need to add a reactive power equal in magnitude to the existing value but of the opposite sign. This means we need to add 2.07 VAR capacitive. The new power triangle is shown in Figure $7.3.6$. The vertical components cancel, resulting in the apparent power equaling the true power with $PF = 1$.

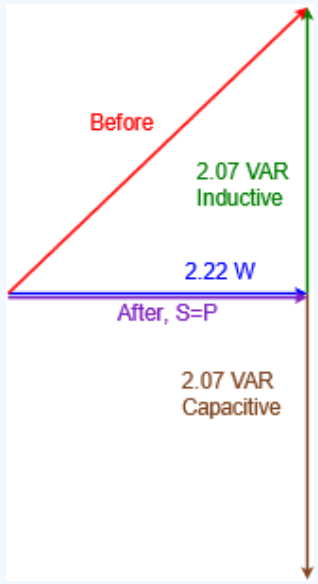

Figure $7.3.6$: Power triangle for the circuit of Figure $7.3.4$ with power factor correction.

We can place the correction capacitor where it's convenient in physical terms, just as long as we add 2.07 VAR capacitive. We don't have a physical circuit, so that's not a consideration here. A convenient location would be to place it across the existing resistor-inductor combo. Our goal then is to first find the required reactance, and from that, determined the required capacitance. We shall do this two different ways. In the first case, we note that the capacitor appears across the only other reactive element in the circuit. Therefore, in order for them to cancel they must have the same reactance magnitude, and thus X_C must equal $-j62.8\Omega$. But what if there were multiple reactive elements in the circuit or if it was impractical to locate the component there, for example, due to space restrictions? In that case, we would simply work the power relation backwards. For comparison, suppose we place the capacitor in the same location; from node a to ground. A voltage divider can be used to determine the present value of v_a. This works out to 11.4 volts RMS. Using the voltage form of the power rule:

$$Q = \frac{v_X^2}{X}$$

$$X = \frac{v_X^2}{Q}$$

$$X = \frac{11.4V^2}{2.07VAR}$$

$$X = 62.8\Omega$$

Either way we derive X_C, now we just solve the capacitive reactance formula to find C.

$$C = \frac{1}{2\pi f X_C}$$

$$C = \frac{1}{2\pi 10kHz 62.8\Omega}$$

$$C = 253.3nF$$

The resulting circuit is shown in Figure $7.3.7$.

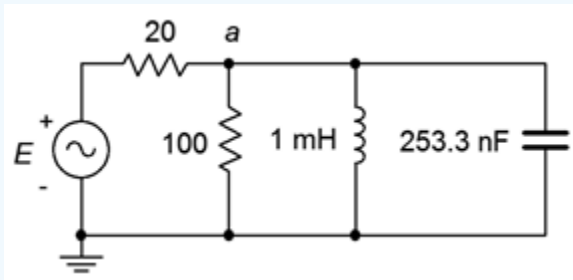

Figure $7.3.7$: The circuit of Figure $7.3.4$ with power factor correction.

Computer Simulation

It is useful to see the reduction in current demand caused by using power factor correction. To so so, the circuit of Figure $7.3.7$ is captured in a simulator as shown in Figure $7.3.8$.

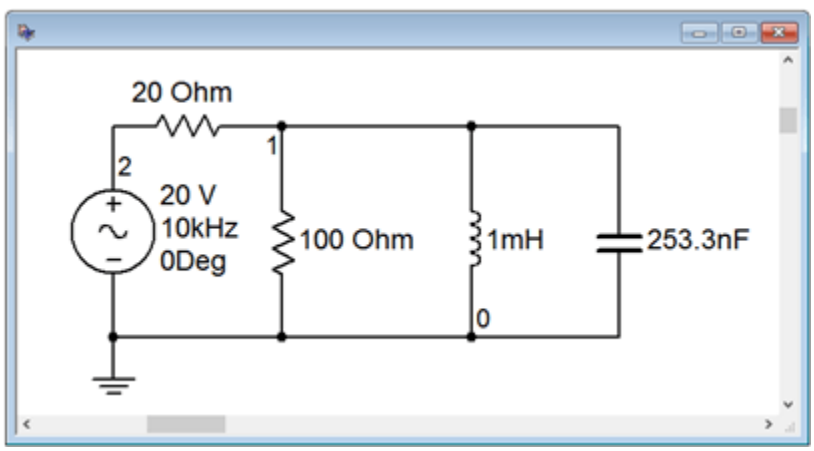

Figure $7.3.8$: The circuit of Figure $7.3.7$ in a simulator.

We will run two transient analyses to find the source current. The first version will be run using the original circuit configuration without the capacitor. The second run will include the capacitor. To plot the currents, we will make use of Ohm's law. First we obtain the voltages at nodes 1 and 2. Then, using the simulator's post processor, we subtract v_1 from v_2 which yields the voltage across the 20 Ω resistor. This quantity is then divided by 20 Ω to arrive at the input current. This is similar to the current sense resistor technique used in earlier chapters.

The resulting current for the original circuit is shown in Figure $7.3.9$. Note that the peak current is just over 300 milliamps, as calculated in step two of the example.

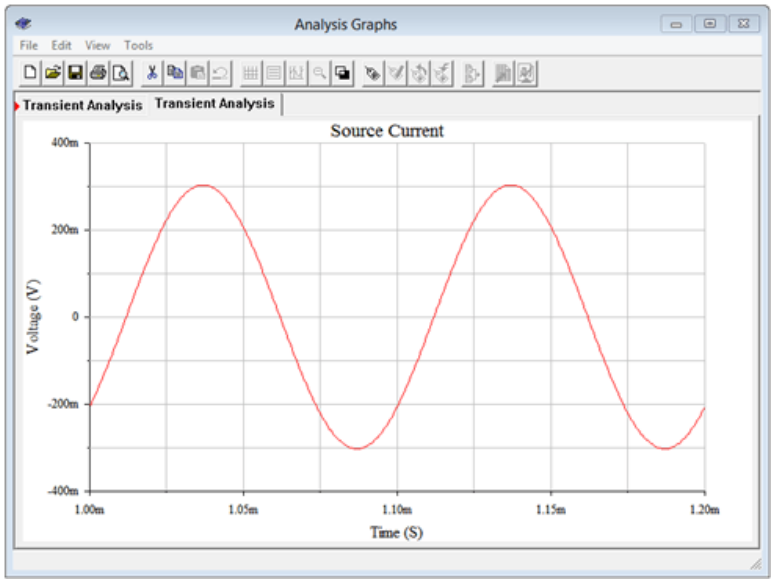

Figure 7.3.9: Simulation results for the circuit of Figure 7.3.8 without power factor correction.

The second simulation is shown in Figure 7.3.10, now with power factor correction.

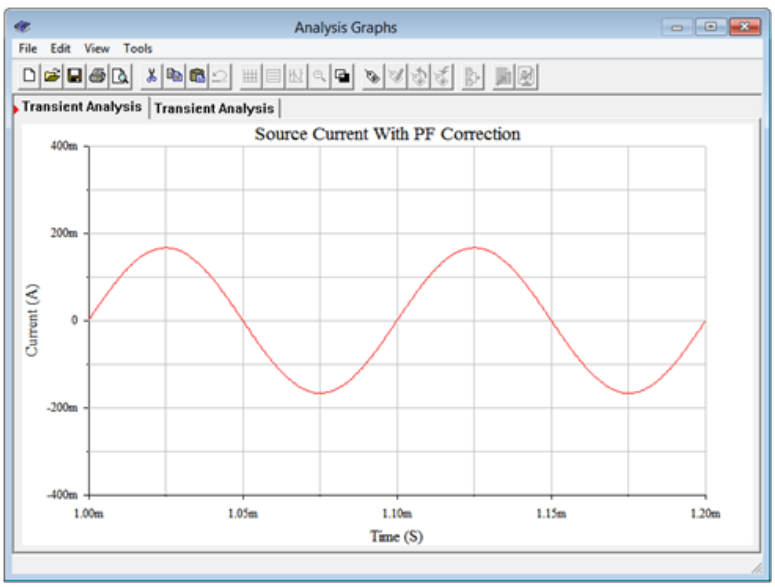

Figure 7.3.10: Simulation results for the circuit of Figure 7.3.8 with power factor correction.

The amplitude here is much reduced, in the range of 160 to 170 milliamps peak. By adding the capacitor, the two reactive currents cancel, leaving a parallel impedance of just 100 Ω. This is in series with the 20 Ω resistor. Dividing 120 Ω into the 20 volt peak source yields a peak current of approximately 167 mA, in agreement with the simulation. The cancellation of the reactive currents is also shown by the fact that the source current is no longer out of phase. In Figure 7.3.10 the current waveform is in phase and starts at zero, as expected. This implies a load that is the equivalent of a pure resistance. In contrast, the plot of Figure 7.3.9 shows a current that is lagging by around one-half division, or about 45 degrees, which unsurprisingly is the approximate value of the circuit's impedance angle. Obviously then, this combined impedance must be inductive.

To sum up, power factor correction is used to lower current demand while keeping load power constant. If the load is fixed, this can be achieved through the use of a capacitor (for inductive loads) or an inductor (for capacitive loads). If the load demand is dynamic, then a more complex system is required, for example, switching through a bank of capacitors to get a value close to the precise value needed for that particular load. More examples of power factor correction are in the next section.

References

[1]Hyperbole seems to work for the movie industry, anyway.

This page titled 7.3: Power Triangle is shared under a CC BY-NC-SA 4.0 license and was authored, remixed, and/or curated by James M. Fiore via source content that was edited to the style and standards of the LibreTexts platform.

7.4: Power Systems

In this section we shall change our focus and consider power systems at a more functional or abstract level rather than at the component level. Specifically, we would like to consider common loads such as motors, heating elements, lighting devices and the like, and how to analyze a system consisting of a variety of different loads. For the most part, we shall stick with the basic scheme of multiple loads being supplied by a common and ideally constant voltage source with each load configured in parallel with the others. Systems do not have to be configured this way but it is typical of residential and commercial applications.

Typical Loads

Three common loads are heating elements, lighting devices and motors or compressors. The first two are fairly obvious, but the the latter are also quite common, although often hidden from view inside devices such as refrigerators, air conditioners and heat pumps. We can classify loads in terms of their typical impedance. Devices such as baseboard electrical heating units, toasters, coffee makers and electric ovens are classified as resistive heating devices. The load they present is easily approximated as a simple resistance. The same is true for incandescent lights, however, there can be a very large change in resistance between the on and off states of incandescent lights. Motors, and other devices integrating motors such as compressors, present an inductive impedance. This is due to the large coils of wire, or windings, inside the motor. Any motorized electrical device falls into this category, such as a washing machine, drill press or the fan of Figure $7.4.1$.

Figure $7.4.1$: A small boxer fan for cooling electronic components.

Purely capacitive loads are not nearly as common but some everyday devices exhibit highly complex impedances that can vary widely in both amplitude and angle. A standard moving coil dynamic loudspeaker falls into this category. While you would never plug a loudspeaker directly into an AC power system[1], the amplifier that drives it must be designed to meet the challenges of an impedance whose magnitude can change by a factor of ten across the audible range of frequencies. To complicate matters, while the phase typically is inductive, at some frequencies it can be purely resistive or even capacitive.

Efficiency

Efficiency is defined as usable power output divided by applied power input and is denoted by the Greek letter eta, \eta . Normally it is expressed as a percentage and it can never be over 100%.

$$\eta = \frac{P_{output}}{P_{input}} \tag{7.4.1}$$

Some loads, such as typical heating elements, can be thought of as being 100% efficient, meaning that all of the electrical input is turned into useful output (in this case that's heat, although there are more effective ways of using that electrical input to generate heat, such as a heat pump[2]). In contrast, incandescent light bulbs turn very little of their input into the desired quantity (light) and thus suffer from low efficiency. Just a few percent of the electrical energy fed into an incandescent bulb turns into light while the vast majority turns into heat. From that perspective, incandescent lights are more efficient at producing heat than light. LED lighting, on the other hand, is perhaps an order of magnitude more efficient than incandescent lighting, meaning that we can get the same light output for a much smaller electrical power input while simultaneously producing less heat.

Motors lose power in the form of mechanical losses (e.g., friction) and electrical losses (e.g., resistance of windings). Motors are rated in terms of their output power, not the power they draw from the source. For example, a motor with a 1 HP rating might be

said to generate 1 HP (approximately 745.7 W) at the shaft. If the motor is 90% efficient, the electrical draw would be 745.7 W/0.9 or 829 W. This situation is further complicated by the phase angle (i.e., power factor) of the motor due to reactive elements, as noted in the previous sections. Compared to motors, home loudspeakers are particularly inefficient, typically converting only about 1% of the electrical input into usable acoustic output.

Example 7.4.1

A certain 120 VAC RMS 60 Hz 1.2 HP motor has an efficiency of 90% and a lagging power factor of 0.85. Determine the apparent power and the current drawn from the system. Also draw the power triangle. 1 HP ≈ 745.7 watts.

The motor output is 1.2 horsepower which is equivalent to:

$$P_{watts} \approx 1.2HP \times 745.7W/HP$$

$$P_{watts} \approx 895W$$

The input required to achieve this is computed with Equation 7.4.1.

$$P_{input} = \frac{P_{output}}{\eta}$$

$$P_{input} = \frac{895W}{0.9}$$

$$P_{input} = 994W$$

From Equations 7.3.7 and 7.3.8, the remaining powers are:

$$S = \frac{P}{PF}$$

$$S = \frac{994W}{0.85}$$

$$S = 1170VA$$

$$Q = \sqrt{S^2 - P^2}$$

$$Q = \sqrt{(1170VA)^2 - (994W)^2}$$

$$Q = 617VAR$$

The current is found via Equation 7.3.1, essentially power law:

$$S = v_{RMS} \times i_{RMS}$$

$$i_{RMS} = \frac{S}{v_{RMS}}$$

$$i_{RMS} = \frac{1170VA}{120V}$$

$$i_{RMS} = 9.75A$$

The power triangle is shown in Figure 7.4.2.

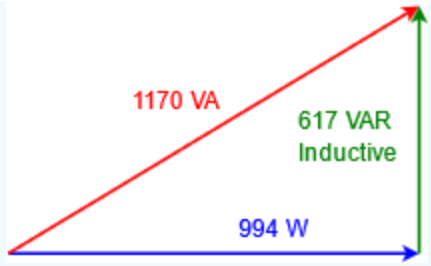

Figure 7.4.2: Power triangle for the motor described in Example 7.4.1.

Example 7.4.2

For the motor described in Example 7.4.1, determine an appropriate component that when placed in parallel will produce unity power factor. Draw the complete power triangle for the system and determine the new current draw.

In Example 7.4.1 the reactive power was determined to be 617 VAR and was inductive, so we'll need 617 VAR capacitive to compensate. The new power triangle is shown in Figure 7.4.3. The source voltage was stated to be 120 V. We can use a variation on power law to determine the required reactance.

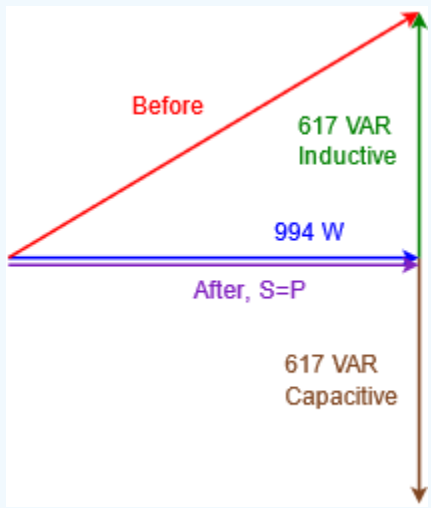

Figure 7.4.3: Power triangle for the corrected system of Example 7.4.2.

$$Q = \frac{v_{RMS}^2}{X_C}$$

$$X_C = \frac{v_{RMS}^2}{Q}$$

$$X_C = \frac{120V^2}{617VAR}$$

$$X_C = -j23.34\Omega$$

Now use the capacitive reactance formula to determine the capacitance value. The line frequency was specified as 60 Hz.

$$C = \frac{1}{2\pi f X_C}$$

$$C = \frac{1}{2\pi 60Hz23.34\Omega}$$

$$C = 114\mu F$$

After correction, the apparent power and real power are the same. Thus,

$$i_{RMS} = \frac{S}{v_{RMS}}$$

$$i_{RMS} = \frac{994VA}{120V}$$

$$i_{RMS} = 8.28A$$

The current draw has been reduced by nearly 1.5 amps, a considerable savings. The new current is 85% of what it used to be.

Now let's consider a larger system that contains several devices.

Example 7.4.3

The system shown in Figure 7.4.4 is supplied by a 240 VAC RMS 60 Hz source. Load 1 is 1000 watts of resistive heating elements. Load 2 is a 3 HP motor with an efficiency of 92% and a lagging power factor of 0.75. Load 3 is a capacitor bank equivalent to 75 μ F. Draw the system power triangle and determine whether or not load 3 is appropriate to bring the system power factor to unity.

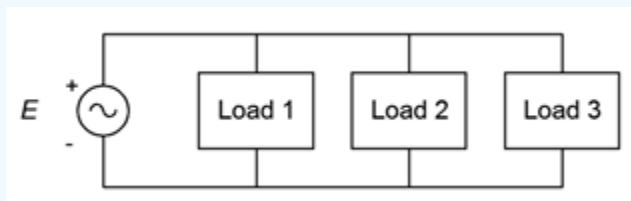

Figure 7.4.4: System block diagram for Example 7.4.3.

First, determine the power triangle for the motor. Then we can add the other loads to it to create a system power triangle. The motor output is 3 HP which is equivalent to:

$$P_{watts} \approx 3HP \times 745.7W/HP$$

$$P_{watts} \approx 2237W$$

The required input power is.

$$P_{input} = \frac{P_{output}}{\eta}$$

$$P_{input} = \frac{2237W}{0.92}$$

$$P_{input} = 2432W$$

The computations for apparent and reactive power follow.

$$S = \frac{P}{PF}$$

$$S = \frac{2432W}{0.75}$$

$$S = 3242VA$$

$$Q = \sqrt{S^2 - P^2}$$

$$Q = \sqrt{(3242VA)^2 - (2432W)^2}$$

$$Q = 2144 \text{ VAR, inductive}$$

The power triangle for the motor is shown in Figure $7.4.5$.

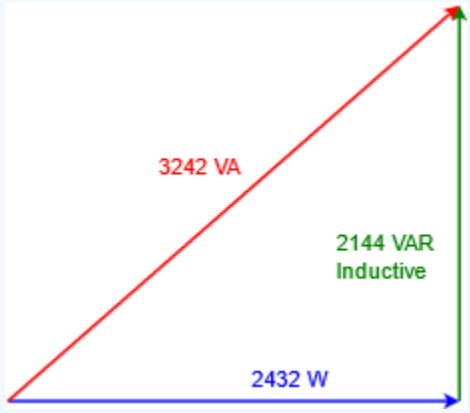

Figure $7.4.5$: Power triangle for the motor of Example $7.4.3$.

Now for the capacitor. First, we need to determine the reactance, then we can use the v^2/Z form of power law to determine Q.

$$X_C = \frac{1}{2\pi f C}$$

$$X_C = \frac{1}{2\pi 60 Hz 75 \mu F}$$

$$X_C = -j35.37\Omega$$

$$Q = \frac{v^2}{X}$$

$$Q = \frac{(240V)^2}{35.37\Omega}$$

$$Q = 1629 \text{ VAR, capacitive}$$

There are no other reactive elements in the system to consider. We have 515 fewer capacitive VAR than inductive VAR, so the correction will not be ideal. We would need to increase the total capacitance by about 24 \mu F to achieve a power factor of unity. The system power diagram with all of the individual parts is shown in Figure $7.4.6$. This is then simplified to the final system power triangle as shown in Figure $7.4.7$. The system PF is 0.989 lagging.

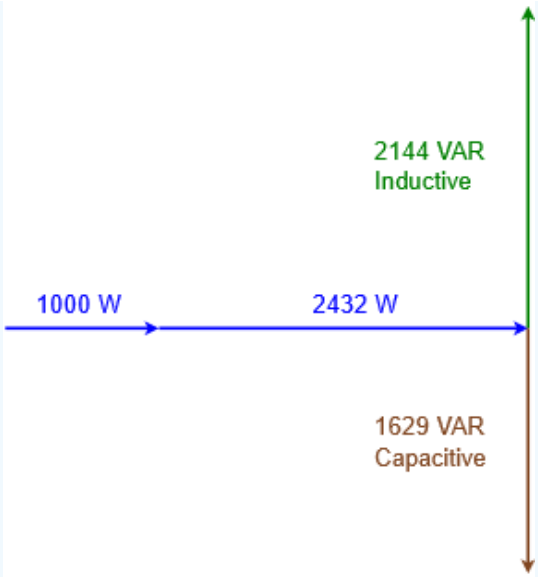

Figure 7.4.6: Power components for the system of Example 7.4.3.

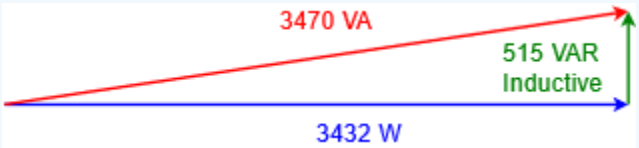

Figure 7.4.7: Final power triangle for the system of Example 7.4.3.

References

[1]That is, unless you enjoy hearing a short-lived blast of sound which is followed by a burst of flames. Plugging a nominal 8 Ω loudspeaker into a 120 VAC outlet would generate 1800 watts of power, well beyond the design limits of any common loudspeaker.

[2]A heat pump moves heat from one place to another. In a properly designed system it takes less energy to move heat than it takes to generate it, and thus it's much more effective than simple resistive heating when it comes to warming the interior of a building.

This page titled 7.4: Power Systems is shared under a CC BY-NC-SA 4.0 license and was authored, remixed, and/or curated by James M. Fiore via source content that was edited to the style and standards of the LibreTexts platform.

7.5: Summary

Power is the product of current and voltage, however, the phase relationship between the two has a major impact on the result. The most simple and straightforward case is when the current and voltage are in phase, meaning the load is a pure resistance. In this case, the true power can be computed directly as the product of RMS current and voltage. At the other extreme, when the voltage and current are 90 degrees out of phase, as in the case of a purely capacitive or inductive load, power is alternately generated and dissipated. That is, in a reactive load, true power dissipation is zero. A mechanical analogy is the storage and release of energy in an ideal spring as it is alternately compressed and then allowed to expand. In between these two extremes, that is, when the load is a complex impedance, the true power dissipation is somewhere between zero and the resistive maximum.

The power triangle is used to make visual sense of this situation. It is a right triangle comprised of three legs. The horizontal leg represents the true, or resistive, power and is denoted by the letter P. It is measured in watts. The vertical leg represents the so-called "reactive power". It is denoted by the letter Q and has units of VAR (volt-amps-reactive). Q can be either inductive or capacitive. The third leg, the hypotenuse, is the apparent power, S. It is measured in VA (volt-amps). It is called apparent power because that is what the power appears to be if it is naively measured with a voltmeter and an ammeter, ignoring the phase difference between them. The angle between the real and apparent powers, θ (theta), is the phase angle between the voltage and current. In other words, theta is the impedance angle. Knowing theta, real power can be determined using right angle trigonometry, namely, $P = S\cos\theta$. The cosine of theta is also know as the power factor, PF. It ranges from 0 (purely reactive) to 1 (purely resistive). Positive or inductive impedance angles are said to have lagging power factor while negative or capacitive impedance angles produce leading power factor.

Ideally, loads are purely resistive and have a power factor of unity. If this is not the case, then for a given voltage, a higher current is needed to create the same real power as in the purely resistive case. This is not advantageous. Power factor correction is the process of shifting the power factor back to unity for complex loads. This is done by inserting a reactance of the opposite sign to counterbalance the reactive portion of the load, for example, adding capacitive reactance to a system that is inductive. The added reactive power must have the same magnitude as the original reactive power but be of the opposite sign, resulting in cancellation.

Efficiency is the measure of usable output power to applied power. Ideally, electromechanical systems such as motors would be 100% efficient, meaning that there is no power loss, but this is not a practical possibility. For example, there will always be frictional losses and power losses in wires.

Review Questions

1. Define apparent power, real power and reactive power.

2. Describe the power triangle.

3. What is power factor, PF?

4. Describe the difference between leading and lagging power factor.

5. What is power factor correction?

6. Give examples of resistive loads and inductive loads.

This page titled 7.5: Summary is shared under a CC BY-NC-SA 4.0 license and was authored, remixed, and/or curated by James M. Fiore via source content that was edited to the style and standards of the LibreTexts platform.

7.6: Exercises

Analysis

1. For the circuit shown in Figure $7.6.1$, determine apparent power S, real power P, reactive power Q and power factor PF. Also, draw the power triangle.

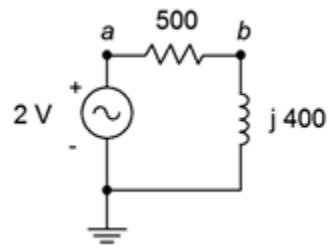

Figure $7.6.1$

2. For the circuit shown in Figure $7.6.2$, determine apparent power S, real power P, reactive power Q and power factor PF. Also, draw the power triangle.

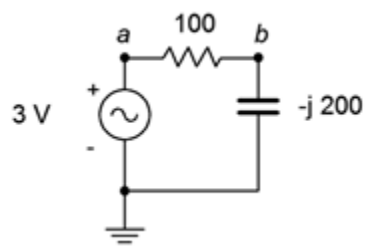

Figure $7.6.2$

3. For the circuit shown in Figure $7.6.3$, determine apparent power S, real power P, reactive power Q and power factor PF. Also, draw the power triangle. The source is 120 volts.

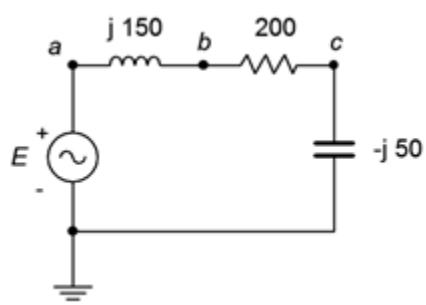

Figure $7.6.3$

4. For the circuit shown in Figure $7.6.4$, determine apparent power S, real power P, reactive power Q and power factor PF. Also, draw the power triangle. The source is 120 volts.

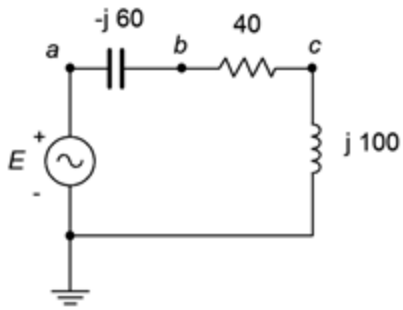

Figure $7.6.4$

5. For the circuit shown in Figure $7.6.5$, determine apparent power S, real power P, reactive power Q and power factor PF. The source is 90 volts, $X_L = j30\ \Omega$, R = 50 Ω.

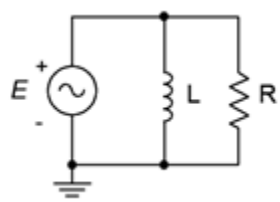

Figure $7.6.5$

6. For the circuit shown in Figure $7.6.6$, determine apparent power S, real power P, reactive power Q and power factor PF. Also, draw the power triangle. The source is 240 volts, $X_C = -j200\ \Omega$, R = 75 Ω.

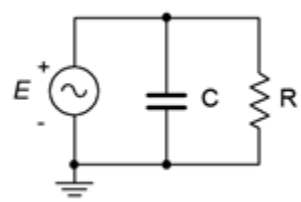

Figure $7.6.6$

7. For the circuit shown in Figure $7.6.7$, determine apparent power S, real power P, reactive power Q and power factor PF. The source is 120 volts, $X_L = j40\ \Omega$, $X_C = -j25\ \Omega$, R = 20 Ω.

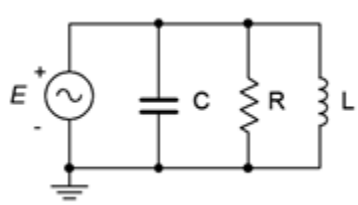

Figure $7.6.7$

8. For the circuit shown in Figure $7.6.7$, determine apparent power S, real power P, reactive power Q and power factor PF. The source is 120 volts, 60 Hz. R = 80 Ω, C = 20 μF, L = 400 mH.

9. An audio power amplifier delivers a 30 volt RMS 1 kHz sine to a loudspeaker. If the loudspeaker impedance at this frequency is $7\angle 45^\circ$, determine the RMS current delivered to the load and the true power.

10. An audio power amplifier delivers an 80 volt peak 35 Hz sine to a subwoofer. If the subwoofer impedance at this frequency is $4\angle -30^\circ$, determine the peak current delivered to the load and the true power.

11. A certain load is specified as drawing 8 kVA with a lagging power factor of 0.8. Determine the real power P, and the reactive power Q. Further, if the source is 120 volts at 60 Hz, determine the effective impedance of the load in both polar and rectangular form, and the requisite resistance/inductance/capacitance values.

12. A certain load is specified as drawing 20 kVA with a leading power factor of 0.9. Determine the real power P, the reactive power Q and draw the power triangle. If the source is 240 volts at 60 Hz, determine the effective impedance of the load in both polar and rectangular form, and the requisite resistance/inductance/capacitance values.

13. Consider the system shown in Figure $7.6.8$. E is a standard 120 V input. If the three loads are 45 W, 60 W and 75 W incandescent light bulbs, respectively, determine the apparent power delivered to the system, the source current, the reactive power and the real power.

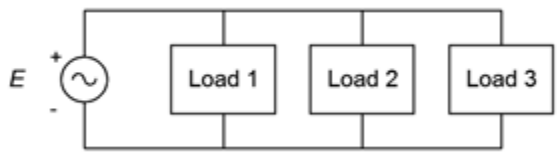

Figure $7.6.8$

14. Given the system shown in Figure $7.6.8$, determine the apparent power delivered to the system, the source current, the real power, the reactive power and the efficiency. E is 120 V. The three loads are resistive heating elements of 500 W, 1200 W and 1500 W, respectively.

15. Consider the system shown in Figure $7.6.9$. E is 240 V. If the three loads are 200 W, 400 W and 1000 W resistive, respectively, determine the apparent power delivered to the system, the real power and the reactive power.

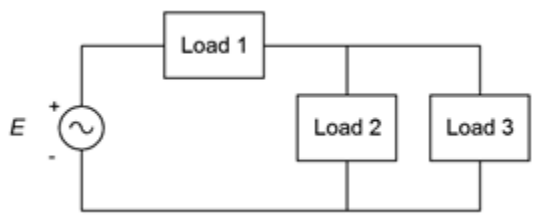

Figure $7.6.9$

16. Given the system shown in Figure $7.6.9$, determine the apparent power delivered to the system, the real power, the reactive power and the efficiency. E is 480 V. The three loads are resistive heating elements of 1500 W, 2000 W and 3500 W, respectively.

17. Consider the system shown in Figure $7.6.8$. E is 120 V. Load 1 is 1 kW resistive, load 2 is 400 W resistive and load 3 is 600 VAR inductive. Determine the apparent power delivered to the system, the source current, the reactive power, the real power and the power factor.

18. Consider the system shown in Figure $7.6.8$. E is 240 V. Load 1 is 2 kW resistive, load 2 is 800 W resistive and load 3 is 1200 VAR capacitive. Determine the apparent power delivered to the system, the source current, the real power, the reactive power and the power factor.

19. Given the system shown in Figure $7.6.8$, determine the apparent power delivered to the system, the source current, the real power, the reactive power and the power factor. E is 120 V. Load 1 is 600 W of incandescent lighting, load 2 is 1200 W of heating elements and load 3 is 200 VAR capacitive.

20. Given the system shown in Figure $7.6.8$, determine the apparent power delivered to the system, the source current, the real power, the reactive power and the power factor. E is 60 V. Load 1 is 90 W of incandescent lighting, load 2 is 800 W of heating elements from a dryer and load 3 200 VAR inductive.

21. A 120 V 3 HP motor draws a real power of 2500 W from the source. Determine its efficiency.

22. A 120 V 12 HP motor draws a real power of 10 kW from the source. Determine its efficiency.

23. An ideal 120 V 2 HP motor draws an apparent power of 1800 W from the source. Determine its power factor.

24. An ideal 120 V 0.3 HP motor draws an apparent power of 270 W from the source. Determine its power factor.

25. A 120 V motor is rated at 0.5 HP. It has an efficiency of 78% and a lagging power factor of 0.7. Determine the apparent power drawn from the source (S), the real power (P), and the reactive power (Q) supplied. Also draw the power triangle and find the delivered current.

26. A motor is rated at 10 HP. It has an efficiency of 92% and a lagging power factor of 0.8. Determine the apparent power drawn from the source (S), the real power (P), and the reactive power (Q) supplied. Also draw the power triangle. Finally, determined the current drawn from the 120 V source.

27. Consider the system shown in Figure $7.6.8$. E is 120 V. Load 1 is 1 kW resistive, load 2 is 400 W resistive and load 3 is a 1 HP motor that is 80% efficient and has a 0.85 lagging power factor. For the system, determine the apparent power delivered, the source current, the real power, the reactive power and the power factor.

28. Consider the system shown in Figure $7.6.8$. E is 120 V. Load 1 is 2.5 kW resistive, load 2 is 500 VAR capacitive and load 3 is a 2 HP motor that is 85% efficient and has a 0.9 lagging power factor. For the system, determine the total power delivered, the source current, the apparent power, the real power and the power factor.

29. For the system shown in Figure $7.6.10$, E is 240 V. Load 1 is 1.2 kW resistive heating, load 2 is 400 W resistive lighting, load 3 is a 0.5 HP motor that is 80% efficient with a 0.7 lagging power factor, and load 4 is a 1 HP motor that is 85% efficient with a 0.8 lagging power factor. For the system, determine the apparent power delivered, the source current, the real power, the reactive power and the power factor.

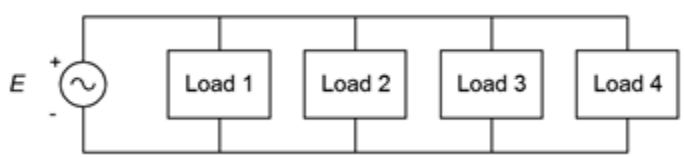

Figure $7.6.10$

Design

30. A 120 V 60 Hz source drives a load equivalent to a 75 Ω resistor in parallel with a 25 μF capacitor. Determine the appropriate capacitance or inductance value to place across this load to produce unity power factor.

31. A 240 V 60 Hz source drives a load equivalent to a 10 Ω resistor in parallel with a 50 mH inductor. Determine the appropriate capacitance or inductance value to place across this load to produce unity power factor.

32. A load of $50\angle 30^\circ$ is driven by a 120 V 60 Hz source. Determine the appropriate capacitance or inductance value to place across this load to produce unity power factor.

33. A load of $50\angle -50^\circ$ is driven by a 240 V 60 Hz source. Determine the appropriate capacitance or inductance value to place across this load to produce unity power factor.

34. A certain load is specified as drawing 8 kVA with a lagging power factor of 0.8. The source is 120 volts at 60 Hz. Determine the appropriate capacitor or inductor to place in parallel with this load to produce unity power factor.

35. A certain load is specified as drawing 20 kVA with a leading power factor of 0.9. The source is 240 volts at 60 Hz. Determine the appropriate capacitor or inductor to place in parallel with this load to produce unity power factor.

36. A 240 V 60 Hz source is connected to a load consisting of heating elements of 10 kW along with a 15 HP motor with η = 90%,

PF = 0.85. Determine an appropriate capacitor or inductor to place in parallel to produce unity power factor.

37. A 120 V 60 Hz source is connected to a load consisting of 350 W of resistive lighting along with a 1.5 HP motor with η = 70%, PF = 0.75. Determine an appropriate component to place in parallel to produce unity power factor.

Challenge

38. A power distribution system for a concert has the following specifications: Ten class D audio power amplifiers rated at 2 kW output each with 90% efficiency and unity power factor, 10 kW worth of resistive stage lighting to illuminate the musicians alongside a troupe of trained dancing kangaroos, a 3 HP motor used to continuously rotate the drum riser throughout the performance (η = 80%, PF = 0.75) and a 2 HP compressor which inflates and deflates a giant rubber T. rex during particularly exciting parts of the show (η = 85%, PF = 0.8). For the system, determine the total power delivered, the source current, the apparent power, the real power, and the power factor. Finally, make a sketch of this extravaganza with its entertainers in full regalia singing their latest tune “Maximum Volume”.

Simulation

39. Verify the design of problem 28 by performing a transient analysis. The design will have been successful if the source current and voltage are in phase.

40. Verify the design of problem 29 by performing a transient analysis. The design will have been successful if the source current and voltage are in phase.

This page titled 7.6: Exercises is shared under a CC BY-NC-SA 4.0 license and was authored, remixed, and/or curated by James M. Fiore via source content that was edited to the style and standards of the LibreTexts platform.

8: RESONANCE

Learning Objectives

After completing this chapter, you should be able to:

- Describe series resonance and plot impedance, voltage and current as a function of frequency.
- Describe parallel resonance and plot impedance, voltage and current as a function of frequency.
- Determine system resonant frequency, Q and bandwidth in series and parallel resonant networks.
- Perform series-to-parallel transforms for practical inductors.

8.1: Introduction

8.2: Series Resonance

8.3: Parallel Resonance

8.4: Summary

8.5: Exercises

This page titled 8: Resonance is shared under a CC BY-NC-SA 4.0 license and was authored, remixed, and/or curated by James M. Fiore via source content that was edited to the style and standards of the LibreTexts platform.

8.1: Introduction

Resonance can be thought of as a preferred frequency of vibration. In other words, it is a frequency at which a system operates with reduced limitation. It is exploited in a variety of areas, for example, a good mechanical resonance can be used for the construction of acoustic musical instruments. In this case, we strive to maintain the resonant oscillation in order to enhance the instrument's sustain. On the other hand, we might want to control or limit the resonance, as in an automotive suspension system. In electrical systems, resonance tends to produce either a maximum or a minimum response to current or voltage. As a result, resonant systems can be used to filter out or select specific frequencies across the spectrum. Obvious uses include tuning circuits, oscillators, filters and the like.

There are two basic forms of resonance for electrical circuits: series RLC resonance and parallel RLC resonance. Series resonance tends to be the less complicated of the two. Both types share many similarities but in some respects they are mirror images of each other. Series and parallel resonant circuits both exhibit wide fluctuations in impedance magnitude and phase across the frequency spectrum. In the case of series resonance, the impedance is at a minimum at the resonance frequency. This implies a current maximum if the circuit is driven by a voltage source. In contrast, parallel resonance produces an impedance peak at resonance. This implies a voltage maximum if the circuit is driven by a current source.

References

[1]"Q" as used in this chapter is not to be confused with the Q used to represent reactive power, although it is related to the Q, or quality factor, of an inductor.

This page titled 8.1: Introduction is shared under a CC BY-NC-SA 4.0 license and was authored, remixed, and/or curated by James M. Fiore via source content that was edited to the style and standards of the LibreTexts platform.

8.2: Series Resonance

Let's begin with the simplest RLC circuit; one consisting of a single voltage source in series with a single resistor, inductor and capacitor, as shown in Figure $8.2.1$. Of particular interest is how the total impedance varies across the frequency spectrum and what impact this has on the current and the three component voltages.

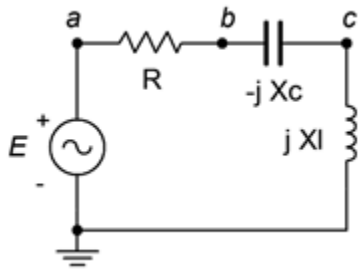

Figure $8.2.1$: A series RLC circuit.

The impedance as seen by the source is simply the sum of the three components, or

$$Z = R + jX_L - jX_C$$

This can be expanded into

$$Z == R + j2\pi fL - j\frac{1}{2\pi fC}$$

The interesting part here is that the first term is not a function of frequency, the second term is directly proportional to frequency and the third is inversely proportional to frequency. Further, given that the positive and negative reactances behave oppositely, it appears that at some frequency they may cancel out, leaving just the resistance.

To refine this, we expect that at low frequencies the capacitor will dominate the impedance. In other words, X_C will be the largest of the three ohmic values. This means that the overall impedance will tend to mimic both the magnitude and phase of the capacitive reactance. On the other hand, at very high frequencies the inductor will tend to dominate the impedance. X_L will be the largest of the three values. In this region, the combined impedance will echo that of the inductor. In short, at low frequencies the impedance magnitude will be large and the circuit will appear capacitive while at high frequencies the impedance magnitude will be large and the circuit will appear inductive. In the middle is where things get interesting.

A plot of the resistance or reactance of the three elements is shown in Figure $8.2.2$. The sum of the three is also shown (red). The frequency axis is uses a logarithmic scale to show the symmetrical nature of the combined impedance curve.

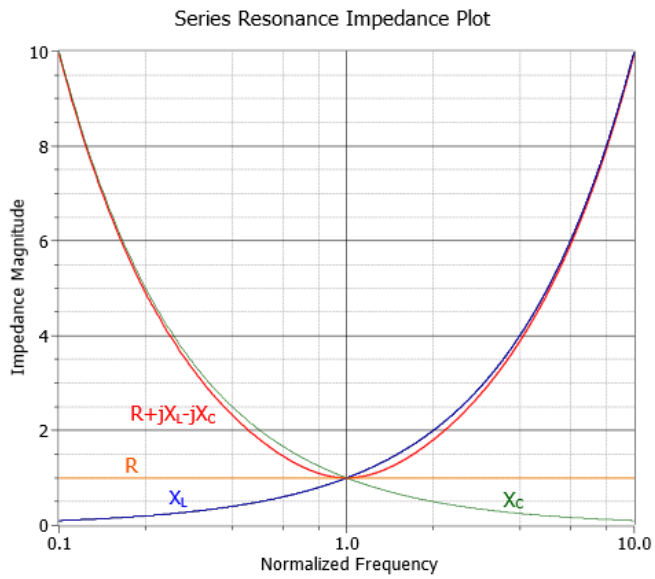

Figure 8.2.2: Series impedance variation across frequency.

The dip in the center corresponds to an impedance equal to R. At this frequency the capacitive and inductive reactances are equal in magnitude and effectively cancel each other. All that's left is the resistive component, R. This frequency is known as the resonant frequency and is denoted by f_0.

$$\text{The series resonant frequency, } f_0, \text{ is the frequency at which the magnitudes of the inductive and capacitive reactances are eq}$$

This implies that the power factor is unity at resonance. Also, in a real world circuit R is the combination of the series resistance plus any resistance from the inductor's coil. We can derive a formula for f_0 as follows. The definition declares that the magnitude of X_L must equal the magnitude of X_C. Therefore, we can set the capacitive and inductive reactance formulas equal to each other and then solve for the resulting frequency.

$$\begin{aligned} X_C &= \frac{1}{2\pi f C} \\ X_L &= 2\pi f L \\ X_L &= X_C \\ 2\pi f_0 L &= \frac{1}{2\pi f_0 C} \\ f_0^2 &= \frac{1}{(2\pi)^2 LC} \\ f_0 &= \frac{1}{2\pi\sqrt{LC}} \end{aligned} \tag{8.2.2}$$

Note that a particular resonant frequency can be obtained through a variety of LC pairs. This, along with the value of R, will alter the specific shape of the impedance curve in terms of how narrow or broad the dip is. These components will also affect how quickly the phase response shifts from fully capacitive (-90°) to fully inductive ($+90^\circ$). This shape factor is described by the parameter, Q. The tighter or more narrow the curve, the higher the Q.

Given a constant voltage source, it should be no surprise that a plot of the resulting current will be an inversion of the impedance curve. This is shown in Figure 8.2.3.

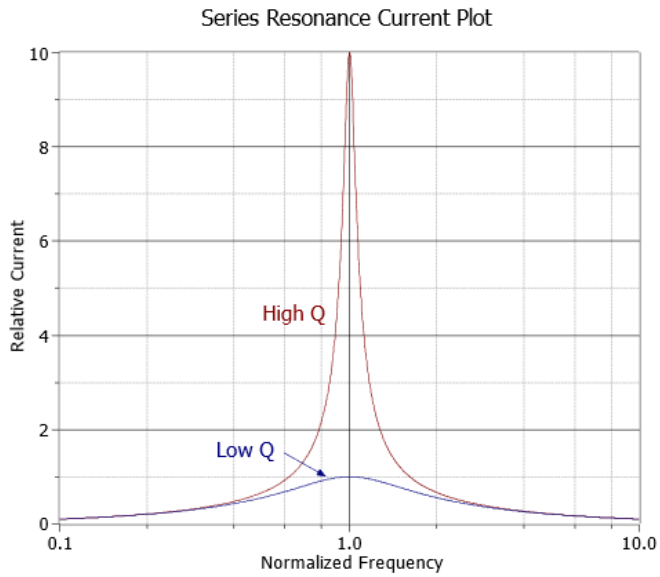

Figure 8.2.3: Series current versus frequency.

If we scale the curves such that they both have a normalized peak of unity, the difference in the shapes may be a little easier to see. This is shown in Figure 8.2.4.

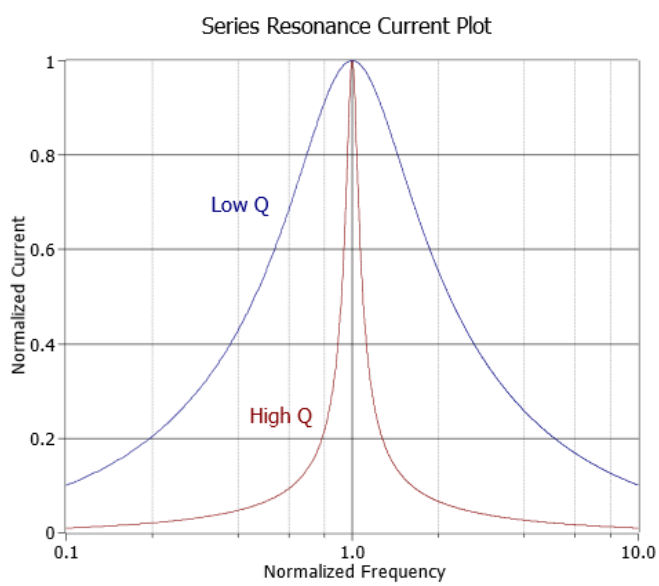

Figure 8.2.4: Normalized series current versus frequency.

At this point we can more precisely define Q. Specifically, the "sharpness" of the curve is related to the half-power or "−3 dB" frequencies, f_1 and f_2.[1] These are the frequencies at which the current (assuming voltage source drive) falls off to 0.707 of the maximum value at resonance. Therefore, they represent the frequencies at which power will have fallen to one-half of the maximum value seen at resonance (recall that power varies as the square of current and that 0.707 squared is approximately 0.5). f_1 is below f_0 and f_2 is found above. The difference between these two frequencies is called the bandwidth, BW.

$$BW = f_2 - f_1 \tag{8.2.3}$$

$$Q_{circuit} = \frac{f_0}{BW} \tag{8.2.4}$$

The relationship between these variables is illustrated in Figure 8.2.5. The vertical axis is shown as a percentage of maximum. For a series resonant circuit driven by a voltage source, this axis is current; however, it can be voltage in the the case of a parallel resonant circuit, as we shall see. If this plot is compared to the curves in Figure 8.2.4, it should be apparent that for lower Q

circuits, f_1 and f_2 spread apart, moving away from the resonant frequency, f_0. Thus, for any given f_0, a lower Q means a wider (larger) bandwidth.

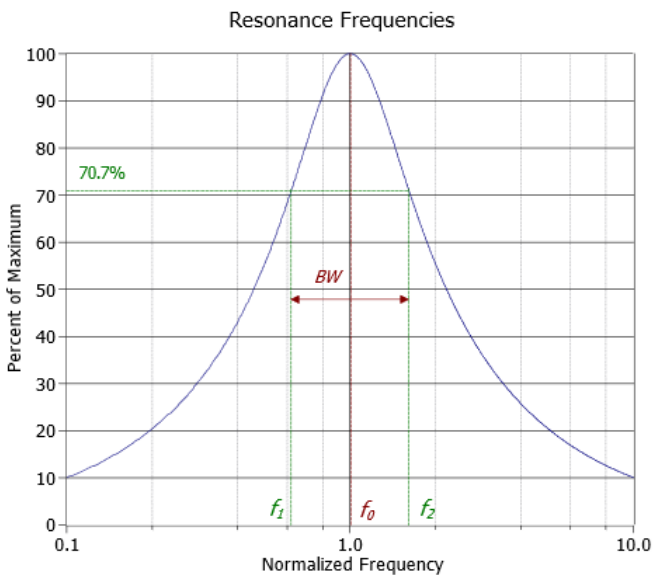

Figure $8.2.5$: Location of f_1 and f_2, and definition of bandwidth (BW).

The resonant frequency, f_0, in general is not located evenly between f_1 and f_2. It is, in fact, located at their geometric mean. In other words,

$$f_0 = \sqrt{f_1 f_2} \tag{8.2.5}$$

From Equation $8.2.5$ we may derive:

$$\frac{f_0}{f_1} = \frac{f_2}{f_0} \tag{8.2.6}$$

To find accurate values for f_1 and f_2 we can define a factor, k_0. The derivation of k_0 is found in Appendix C.

$$k_0 = \frac{1}{2Q_{circuit}} + \sqrt{\frac{1}{4{Q_{circuit}}^2} + 1} \tag{8.2.7}$$

$$f_1 = \frac{f_0}{k_0} \tag{8.2.8}$$

$$f_2 = f_0 \times k_0 \tag{8.2.9}$$

For higher Q circuits ($Q_{circuit} \geq 10$), we can approximate symmetry, and thus

$$f_1 \approx f_0 - \frac{BW}{2} \tag{8.2.10}$$

$$f_2 \approx f_0 + \frac{BW}{2} \tag{8.2.11}$$

As mentioned previously, the Q can be a function of either R or the L/C ratio. In Figures $8.2.6$ and $8.2.7$ we have impedance curves for the two cases. The frequency axis is normalized to f_0 (i.e., f_0 is unity). In Figure $8.2.6$ we vary the resistance value to see how it affects both the magnitude and phase of the impedance across frequency. Figure $8.2.7$ is similar except we vary the inductor/capacitor ratio.

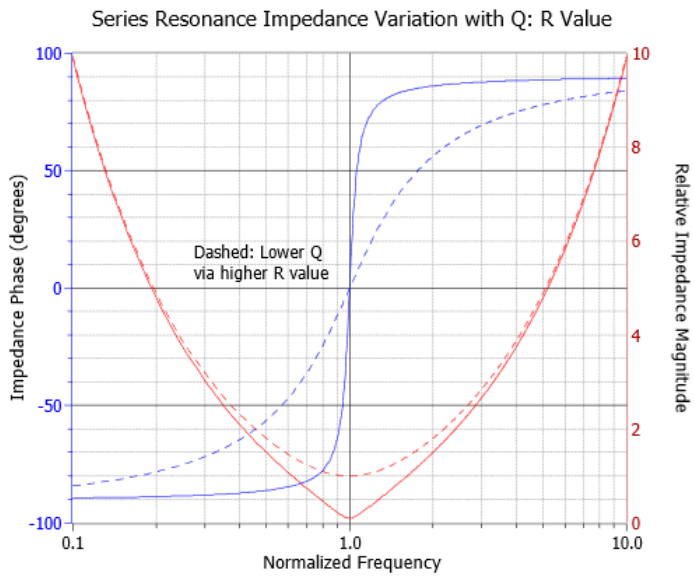

Figure $8.2.6$: Magnitude and phase of impedance for a variation of resistance.

Looking first at the phase (blue, left axis), we see in both cases that high Q circuits exhibit a quick transition from a negative (capacitive) phase angle to a positive (inductive) phase angle. We also notice that the phase shift hits zero at f_0, implying unity power factor.

The impedance magnitude plots show a slightly different story. While it is true that the higher Q plots are sharper, they get that way through different mechanisms. In the case of the resistor, a lower Q is achieved via a larger resistance. This has the effect of blunting the tip of the curve and lowering current flow at f_0 when compared to the high Q case (as seen in Figure $8.2.3$). In contrast, reducing Q by reducing the inductor/capacitor ratio broadens the entire curve. The impedance magnitude at the dip does not change, and thus the current at f_0 does not change. In practical terms, the Q for a series circuit, Q_{series}, may also be defined by the ratio of circuit reactance to the total series resistance at resonance.

$$Q_{series} = \frac{X_0}{R_T} \tag{8.2.12}$$

Where

Q_{series} is the Q of the series resonant circuit (i.e., $Q_{circuit}$ for series),

R_T is the total series resistance ($R_{series} + R_{coil}$),

X_0 is the reactance (either X_L or X_C) at f_0.

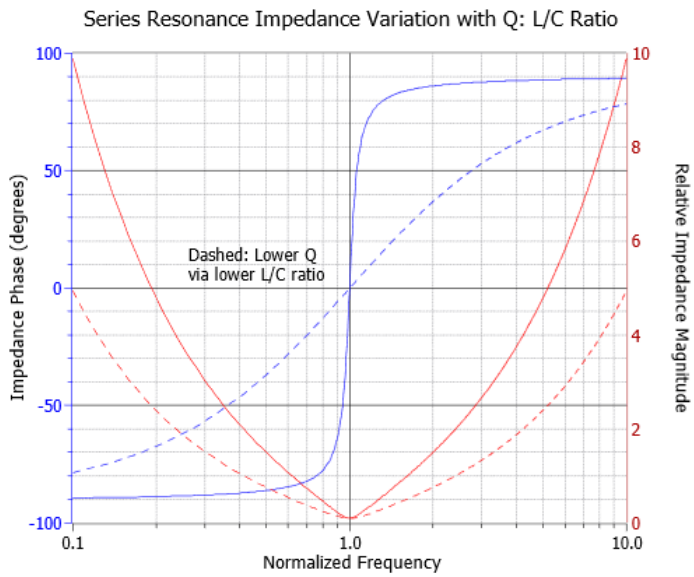

Figure 8.2.7: Magnitude and phase of impedance for a variation of inductor/capacitor ratio.

From Equation 8.2.12 we can derive an expression for Q_{series} in terms of R, L and C as follows:

$$Q_{series} = \frac{X_0}{R_T}$$

$$Q_{series} = \frac{\sqrt{X_0^2}}{R_T}$$

At resonance X_L and X_C have the same magnitude, thus we can also say:

$$Q_{series} = \frac{\sqrt{X_L X_C}}{R_T}$$

$$Q_{series} = \frac{1}{R_T}\sqrt{X_L X_C}$$

$$Q_{series} = \frac{1}{R_T}\sqrt{\frac{2\pi f L}{2\pi f C}}$$

Which simplifies to:

$$Q_{series} = \frac{1}{R_T}\sqrt{\frac{L}{C}} \tag{8.2.13}$$

Effect of Q on Component Voltages

Q will create a multiplying effect on the inductor and capacitor voltages at resonance. At f_0, the current through the circuit will equal the source voltage divided by R because X_C and X_L cancel. This current is also flowing through the capacitor and inductor. Equation 8.2.12 shows that their reactances are Q times higher than R, and therefore their voltages will be Q times higher than the source voltage. KVL is not violated because the voltages across L and C are 180 degrees out of phase and cancel each other. As the circuit Q is increased, the voltage multiplying effect becomes more pronounced. In extreme cases it is possible to produce inductor and capacitor voltages that are more than 100 times larger than the source voltage. As we move away from the resonant frequency, the multiplying effect decreases. At frequencies much lower than f_0, almost all of the source voltage will appear across the capacitor with little for the resistor and inductor. At much higher frequencies, nearly all of the source potential appears across the inductor with nothing seen across the capacitor or resistor. This can be seen in Figure 8.2.8, where the source voltage is unity.

As Q decreases, not only do the capacitor and inductor voltages decrease, but another effect comes into play. At relatively high Q

values, say 10 or more, the capacitor and inductor maximum voltages occur at approximately f_0. At lower Q values the peaks tend to spread apart, with the capacitor's peak below f_0 and that of the inductor above f_0. This is illustrated in Figure $8.2.9$ (again, the source is unity).

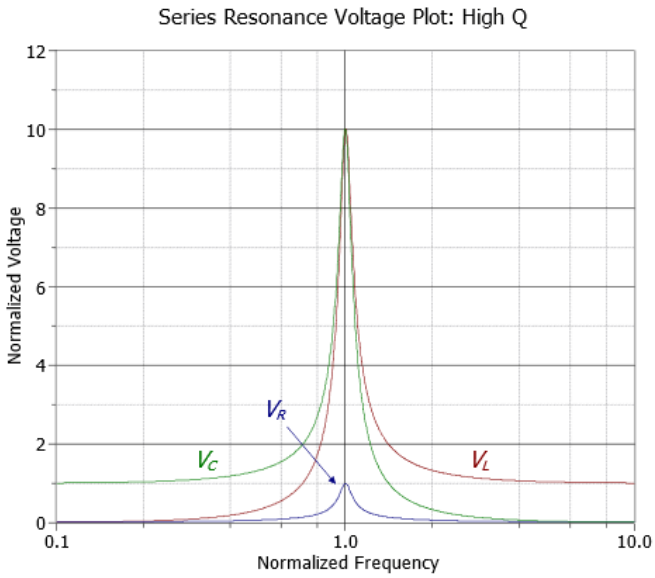

Figure $8.2.8$: Series resonance: component voltages for high Q.

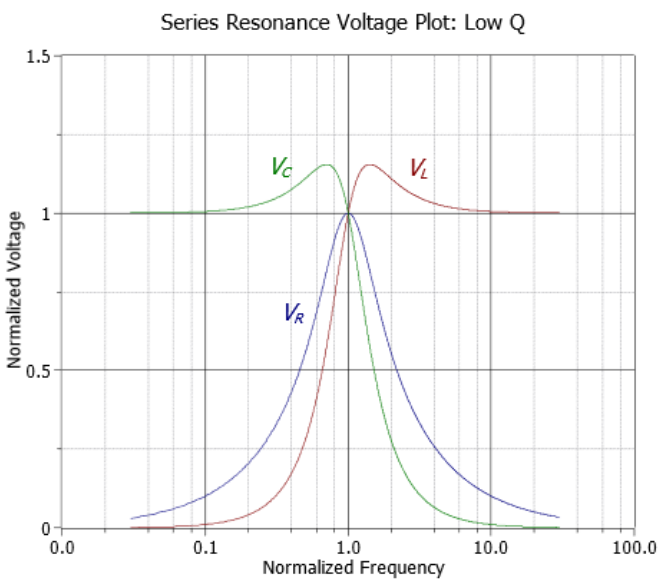

Figure $8.2.9$: Series resonance: component voltages for low Q.

Example $8.2.1$

Consider the series circuit of Figure $8.2.10$ with the following parameters: the source is 10 volts peak, L = 1 mH, C = 1 nF and $R = 50\Omega$. Find the resonant frequency, the system Q and bandwidth, and the half-power frequencies f_1 and f_2.

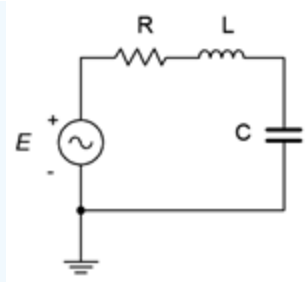

Figure 8.2.10: Circuit for Example 8.2.1.

We begin by finding the resonant frequency.

$$f_0 = \frac{1}{2\pi\sqrt{LC}}$$

$$f_0 = \frac{1}{2\pi\sqrt{1e-3 \cdot 1e-9}}$$

$$f_0 = 159kHz$$

We now find the magnitude of the inductive reactance, and from that, the system Q_{series} via Equation 8.2.12.

$$X_L = 2\pi f_0 L$$

$$X_L = 2\pi 159kHz 1mH$$

$$X_L = 1000\Omega$$

$$Q_{series} = \frac{X_L}{R_T}$$

$$Q_{series} = \frac{1000\Omega}{50\Omega}$$

$$Q_{series} = 20$$

Knowing the Q, the bandwidth and corner frequencies can be found via Equations 8.2.4, 8.2.10 and 8.2.11.

$$BW = \frac{f_0}{Q}$$

$$BW = \frac{159kHz}{20}$$

$$BW = 7.95kHz$$

$$f_1 = f_0 - \frac{BW}{2}$$

$$f_1 = 159kHz - \frac{7.95kHz}{2}$$

$$f_1 \approx 155kHz$$

$$f_2 = f_0 + \frac{BW}{2}$$

$$f_2 = 159kHz + \frac{7.95kHz}{2}$$

$$f_2 \approx 163kHz$$

Given the 10 volt peak source, the voltages across the capacitor and inductor at the resonance frequency of 159 kHz would be Q times greater, or 200 volts. At higher or lower frequencies, the increased impedance lowers the current and also lowers the voltages across the components. At low frequencies, most of the source will appear across the capacitor while at high frequencies the inductor voltage will approach the source voltage.

Refining Series Q

As noted in Chapter 2, all inductors have some series resistance associated with them, usually called R_{coil}. This resistance needs to be included as part of the overall circuit resistance, adding to whatever other series resistance exists. While it is possible to measure the DC resistance of a coil using a DMM, this will not necessarily give an accurate value at high frequencies. Thus, a preferred method is to determine Q_{coil} at the desired frequency from the inductor's spec sheet, and using the calculated reactance at that frequency, determine the value of R_{coil}. An example of such a curve is shown in Figure $8.2.11$.

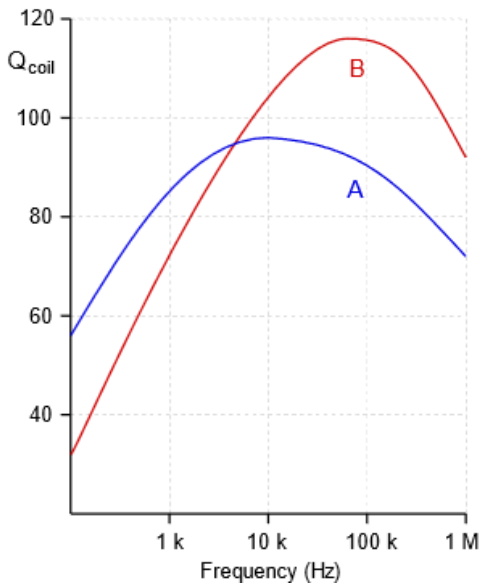

Figure $8.2.11$: Inductor Q graph.

For instance, using curve A, Q_{coil} at 100 kHz is approximately 90. If X_L is 450 Ω at this frequency, then R_{coil} would be 450 $\Omega/90$, or 5 Ω.

Effectively, Q_{coil} sets the ceiling for the Q of the series resonant circuit, Q_{series}. That is, the system Q can never be higher than the coil Q. To do so would require less resistance in the loop than R_{coil}, which is a practical impossibility. It is also worth noting that R_{coil} will create a deviation in the inductor voltage compared to the ideal case. This is because v_L covers the combination of the inductive reactance in series with R_{coil}, thus the magnitude will be somewhat larger than expected and the angle will be less than 90 degrees. These deviations tend to be quite small unless the inductor's Q is fairly low and the remaining circuit resistance is not very much larger than R_{coil}.

Example $8.2.2$

For the circuit of Figure $8.2.11$, determine the resonant frequency, the system Q, the bandwidth, and the ideal maximum voltage across each of the three components. Use curve A from Figure $8.2.11$ for the inductor.

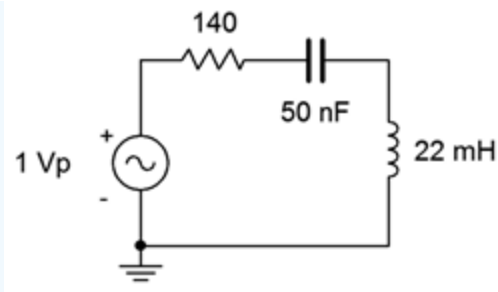

Figure 8.2.12: Circuit for Example 8.2.2.

The first item of importance is finding the resonant frequency.

$$f_0 = \frac{1}{2\pi\sqrt{LC}}$$

$$f_0 = \frac{1}{2\pi\sqrt{22e-3H50e-9F}}$$

$$f_0 = 4.8kHz$$

The inductive reactance is:

$$X_L = 2\pi f_0 L$$

$$X_L = 2\pi 4.8kHz22mH$$

$$X_L = 663.3\Omega$$

From the graph, Q_{coil} is approximately 95, meaning R_{coil} is:

$$R_{coil} = \frac{X_L}{Q_{coil}}$$

$$R_{coil} = \frac{663.3\Omega}{95}$$

$$R_{coil} = 7\Omega$$

Combined with the 140 Ω resistor, we are left with 147 Ω, some 5% higher than if we had ignored it. The system Q is:

$$Q_{series} = \frac{X_L}{R_T}$$

$$Q_{series} = \frac{663.3\Omega}{147\Omega}$$

$$Q_{series} = 4.51$$

The Q is on the low side but not extremely so. Now for the bandwidth:

$$BW = \frac{f_0}{Q}$$

$$BW = \frac{4.8kHz}{4.51}$$

$$BW = 1.06kHz$$

Ideally, at f_0 we expect v_R will be equal to the source of 1 volt peak while the inductor and capacitor voltages will be Q times larger, or approximately 4.5 volts peak. In reality R_{coil} will create a voltage divider, reducing the drop across the 140 Ω resistor to about 0.95 volts. The change in v_L will be negligible due to Z_L being $663.34\angle 89.4^\circ\Omega$ versus the ideal $663.3\angle 90^\circ\Omega$. The system Q is relatively low (< 10), so the v_C and v_L peaks will shift a little from f_0, with v_C peaking at a slightly lower frequency and v_L slightly higher.

Computer Simulation

Of particular interest in the prior example is the precise shape of the component responses versus frequency. This can be produced via an AC or frequency domain simulation. The circuit of Figure $8.2.12$ is captured in a simulator as shown in Figure $8.2.13$, and is modified by adding the inductor's coil resistance below the inductor.

The items of interest are the net resistor voltage which appears between nodes 1 and 2, the capacitor voltage between nodes 2 and 3, and the inductor voltage which appears from node 3 to ground. The analysis is run from 500 Hz to 50 kHz giving us a factor of 10 in frequency on either side of f_0, as seen in Figure $8.2.14$. First, the peaks are just below 5 kHz, as expected. The resistor voltage (blue) is about 0.95 volts, and the inductor (red) and capacitor (green) voltages are about 4.5 volts, as calculated.

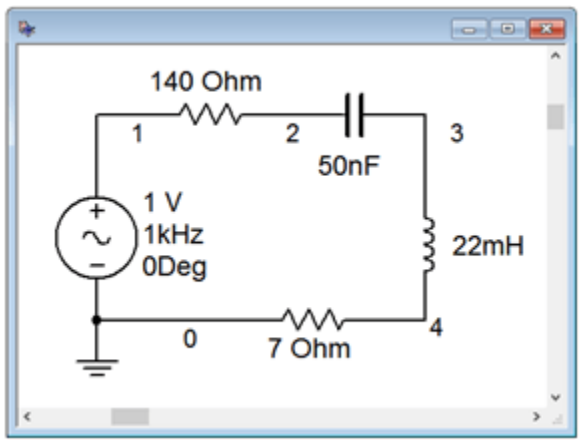

Figure $8.2.13$: The circuit of Example $8.2.2$ in a simulator.

Also, note that there is a slight spread between the peaks of the capacitor and inductor voltages, with v_C slightly below f_0 and v_L slightly above, again just as expected. At the lowest frequencies, all of the source appears across the capacitor while at the highest frequencies all of the source appears across the inductor. Note the similarity between these curves and those of Figures $8.2.8$ and $8.2.9$

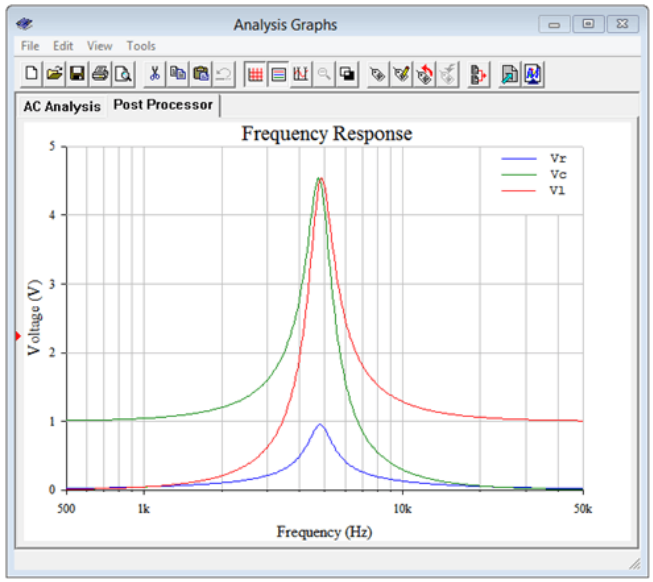

Figure 8.2.14: Voltage versus frequency for each of the three components of the circuit of Figure 8.2.13.

And now for a change of pace; a design problem.

Example 8.2.3

Design a series resonant circuit with a resonant frequency of 100 kHz and a bandwidth of 2 kHz using a 10 mH inductor. Assumes the inductor follows curve B in Figure 8.2.14.

We can find the value for the capacitance by rearranging the resonance frequency equation:

$$f_0 = \frac{1}{2\pi\sqrt{LC}}$$

$$\sqrt{LC} = \frac{1}{2\pi f_0}$$

$$C = \frac{1}{(2\pi f_0)^2 L}$$

$$C = \frac{1}{(2\pi 100kHz)^2 10mH}$$

$$C = 253.3pF$$

Knowing the bandwidth and resonant frequency, we can find the system Q:

$$Q_{series} = \frac{f_0}{BW}$$

$$Q_{series} = \frac{100kHz}{2kHz}$$

$$Q_{series} = 50$$

At resonance, the inductive reactance will be:

$$X_L = 2\pi f_0 L$$

$$X_L = 2\pi 100kHz 10mH$$

$$X_L = 6283\Omega$$

The preceding tells us that the total series resistance must be:

$$R_{series} = \frac{X_L}{Q_{series}}$$

$$R_{series} = \frac{6283\Omega}{50}$$

$$R_{series} = 125.7\Omega$$

Curve B indicates that Q_{coil} is approximately 115 at 100 kHz. Thus, R_{coil} is:

$$R_{coil} = \frac{X_L}{Q_{coil}}$$

$$R_{coil} = \frac{6283\Omega}{115}$$

$$R_{coil} = 54.6\Omega$$

Consequently, we must add $125.7\Omega - 54.6\Omega$, or 71.1Ω, to the series network to achieve the desired system Q. Failure to do so will yield a much higher Q than specified, resulting in a much reduced bandwidth. The completed design is shown in Figure $8.2.15$.

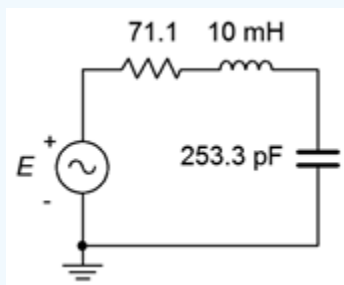

Figure $8.2.15$: Completed circuit design for Example $8.2.3$.

References

[1]Decibels are covered in detail in Chapter 10.

This page titled 8.2: Series Resonance is shared under a CC BY-NC-SA 4.0 license and was authored, remixed, and/or curated by James M. Fiore via source content that was edited to the style and standards of the LibreTexts platform.

8.3: Parallel Resonance

If the three RLC components are placed in parallel, as in Figure $8.3.1$, a parallel resonant circuit can result. Typically, it would be driven by a current source as shown, although this is not a requirement for resonance. Parallel resonance is slightly more complicated than series resonance due to the fact that the series coil resistance cannot be lumped in with the remaining circuit resistance as it can with the series case. In other words, the practical reality is that we have a series-parallel circuit where the inductor is, in fact, a series combination of the inductance and the coil resistance. It turns out that usually this resistance cannot be ignored, even if it is very small. To alleviate this problem, it is possible to find a parallel equivalent for the series inductive reactance and associated coil resistance. That is, we need a series to parallel transform.

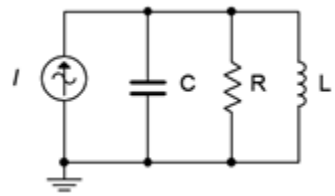

Figure $8.3.1$: Ideal parallel resonant circuit.

Series to Parallel Inductor Transform

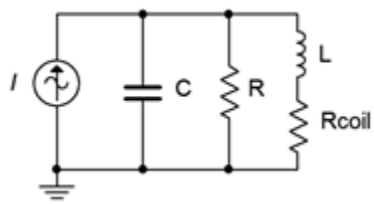

Figure $8.3.2$: Realistic parallel resonant circuit.

First, let's take a look at what we have in practical terms. A realistic parallel resonant circuit is illustrated in Figure $8.3.2$. This circuit adds the internal coil resistance of the inductor to the ideal circuit shown in Figure $8.3.1$. What we would like to do is derive a means of finding the parallel equivalent of the inductor with its coil resistance. Certainly, this should be possible to do. After all, it is a trivial exercise to do the reverse; namely, taking a parallel combination of an inductor and resistor and finding its series equivalent (i.e., expressing the resulting impedance in rectangular form). After completing the process we should have an equivalent circuit like that shown in Figure $8.3.3$. In this equivalent circuit, R and C are the values from the original circuit while $L_{(p)}$ and $R_{coil(p)}$ are the parallel equivalent transformed values derived from the original inductor. In this version, it is easy to combine R in parallel with $R_{coil(p)}$ to create a single resistor and thus wind up back at our ideal circuit of Figure $8.3.1$.

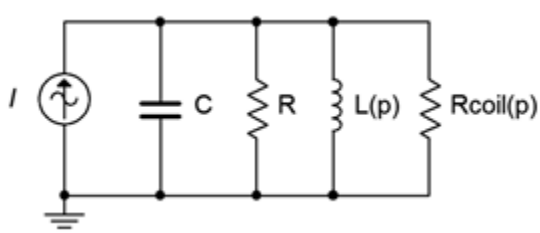

Figure $8.3.3$: Transformed (equivalent) version of a realistic parallel resonant circuit.

For the equivalent transform, refer to Figure $8.3.4$. We start with a practical coil consisting of a series combination of resistance and inductive reactance, $R_s + jX_s$. We will find the parallel equivalent, $R_p || jX_p$.

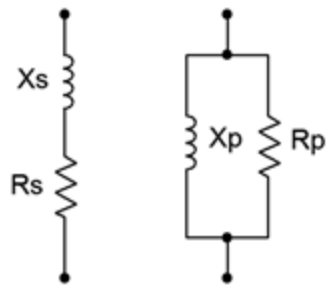

Figure 8.3.4: Series and equivalent parallel RL combinations.

We begin with the reciprocal conductance/resistance rule:

$$R_s + jX_s = \frac{1}{\frac{1}{R_p} + \frac{1}{jX_p}} \tag{8.3.1}$$
$$\frac{1}{R_s + jX_s} = \frac{1}{R_p} + \frac{1}{jX_p}$$

The next step is to isolate the real and imaginary parts of the series version. We can do this by multiplying the left term of Equation 8.3.16 by the complex conjugate to arrive at an equivalent:

$$\frac{1}{R_s + jX_s}\frac{R_s - jX_s}{R_s - jX_s} = \frac{R_s}{R_s^2 + X_s^2} + \frac{-jX_s}{R_s^2 + X_s^2}$$

Substituting this equivalent back into Equation 8.3.1 yields,

$$\frac{R_s}{R_s^2 + X_s^2} + \frac{-jX_s}{R_s^2 + X_s^2} = \frac{1}{R_p} + \frac{1}{jX_p}$$

Therefore,

$$\frac{1}{R_p} = \frac{R_s}{R_s^2 + X_s^2}$$

$$\frac{1}{jX_p} = \frac{-jX_s}{R_s^2 + X_s^2}$$

Taking the reciprocal results in:

$$R_p = \frac{R_s^2 + X_s^2}{R_s} \tag{8.3.2}$$

$$jX_p = j\frac{R_s^2 + X_s^2}{X_s} \tag{8.3.3}$$

For high Q coils ($Q_{coil} \geq 10$), $X_s \gg R_s$, so we can approximate these as:

$$R_p \approx \frac{X_s^2}{R_s} = Q_{coil}X_s = Q_{coil}^2 R_s \tag{8.3.4}$$

$$jX_p \approx j\frac{X_s^2}{X_s} = jX_s \tag{8.3.5}$$

Thus, for a high Q_{coil}, the parallel equivalent reactance is unchanged from the series value and the parallel equivalent resistance is the series resistance times the Q of the coil squared. Interestingly, Equation 8.3.4 shows that a smaller R_S (which yields a proportionally larger Q_{coil}) results in a larger R_P. Thus, the ideal inductor which would have no coil resistance results in an R_p of infinity. Due to this resistive "inversion" of the series-parallel transform, parallel circuit Q is defined as:

$$Q_{parallel} = \frac{R_T}{X_L} \tag{8.3.6}$$

Where

$Q_{parallel}$ is the Q of the parallel resonant circuit (i.e., $Q_{circuit}$ for parallel),

R_T is the total parallel resistance $(R_p||R)$,

X_L is the reactance at f_0.

Based on Equation 8.3.6 and the development of Equation ???, it can be shown that:

$$Q_{parallel} = R_T\sqrt{C}L \tag{8.3.7}$$

For higher Q circuits ($Q_{parallel} \geq 10$), f_0 is found as in the series case (repeating):

$$f_0 = \frac{1}{2\pi\sqrt{LC}} \tag{8.3.8}$$

For lower Q circuits, f_0 will be reduced slightly due to the fact that the transformed resistance is frequency dependent. More on this in an upcoming section.

Parallel Resonance Impedance

A parallel impedance plot is shown in Figure 8.3.5. The effect is the inverse of the series case. At low frequencies the small inductive reactance results in a low impedance magnitude with a positive (inductive) phase angle. At high frequencies the small capacitive reactance results in a low impedance magnitude with a negative (capacitive) phase angle. At resonance the reactive values cancel. This leaves just the parallel resistive value which produces the characteristic peak in impedance. The phase angle is zero, corresponding to a power factor of unity.

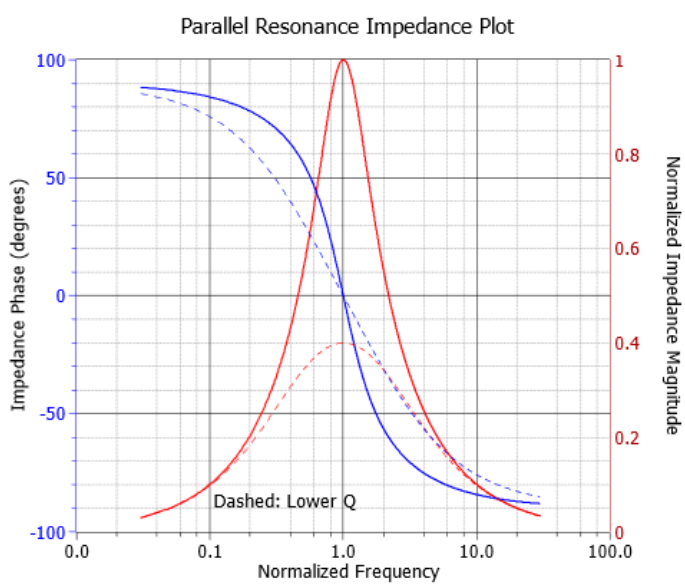

Figure 8.3.5: Impedance plot for parallel resonant circuit.

If the parallel resonant circuit is driven by a current source, then the voltage produced across the resonant circuit (sometimes referred to as a tank circuit) will echo the shape of the impedance magnitude. In other words, it will effectively discriminate against high and low frequencies and keep only those signals in the vicinity of the resonant frequency. This is one method of making a bandpass filter. The lower and upper half-power frequencies, f_1 and f_2, are found in the same manner as in series resonance.

Repeating for convenience:

$$BW = f_2 - f_1 \tag{8.3.9}$$

$$Q_{circuit} = \frac{f_0}{BW} \tag{8.3.10}$$

$$f_0 = \sqrt{f_1 f_2} \tag{8.3.11}$$

$$\frac{f_0}{f_1} = \frac{f_2}{f_0} \tag{8.3.12}$$

$$k_0 = \frac{1}{2Q_{circuit}} + \sqrt{\frac{1}{4{Q_{circuit}}^2} + 1} \tag{8.3.13}$$

$$f_1 = \frac{f_0}{k_0} \tag{8.3.14}$$

$$f_2 = f_0 \times k_0 \tag{8.3.15}$$

For higher Q circuits ($Q_{circuit} \geq 10$), we can approximate symmetry, and thus

$$f_1 \approx f_0 - \frac{BW}{2} \tag{8.3.16}$$

$$f_2 \approx f_0 + \frac{BW}{2} \tag{8.3.17}$$

Finally, it is worth repeating that for relatively low Q values there will be some shifting of the resonant and half-power frequencies from the equations presented above.

There are some similarities between parallel and series resonance. Like series, as the parallel Q increases, the impedance curve becomes sharper and the phase change is more abrupt. Further, we also see an apparent "Q amplification" effect in parallel resonant circuits, however, here it will be the reactive currents that will be increased relative to the source current instead of the series component voltages.

Note that the parallel resistor can be used to lower the system Q and thus broaden the bandwidth, however, the system Q can never be higher than the Q of the inductor itself. The inductor sets the upper limit on system Q and therefore, how tight the bandwidth can be. In other words, $Q_{circuit} \leq Q_{coil}$. This is the same situation we saw for series resonance.

Example 8.3.1

For the circuit of Figure 8.3.6, determine the resonant frequency, the corner frequencies of f_1 and f_2, the bandwidth and the system Q. Also find the circuit voltage at the resonant frequency. $R_{coil} = 100\Omega$.

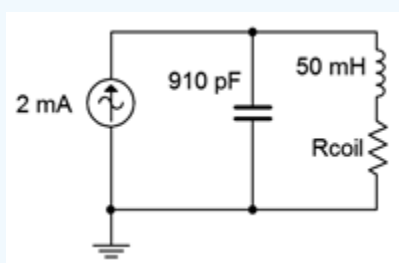

Figure 8.3.6: Circuit for Example 8.3.1.

First, we'll assume this is a high $Q(\geq 10)$ circuit.

$$f_0 = \frac{1}{2\pi\sqrt{LC}}$$

$$f_0 = \frac{1}{2\pi\sqrt{50mH910pF}}$$

$$f_0 = 23.6kHz$$

$$X_L = 2\pi fL$$

$$X_L = 2\pi 23.6kHz 50mH$$

$$X_L = 7.41k\Omega$$

$$Q_{coil} = \frac{X_L}{R_{coil}}$$

$$Q_{coil} = \frac{7.41k\Omega}{100\Omega}$$

$$Q_{coil} = 74.1$$

The parallel equivalent of the coil resistance is:

$$R_p = R_{coil}Q_{coil}^2$$

$$R_p = 100\Omega 74.1^2$$

$$R_p = 549.5k\Omega$$

There is no other resistor in parallel with the inductor and capacitor, therefore the equivalent parallel resistance, R_p, is the total resistance of the circuit, R_T. Consequently, the Q of the circuit must be the same as Q_{coil}. We can verify this as follows:

$$Q_{parallel} = \frac{R_T}{X_L}$$

$$Q_{parallel} = \frac{549.5k\Omega}{7.41k\Omega}$$

$$Q_{parallel} = 74.1$$

Our initial assumption of high circuit Q is met.

$$BW = \frac{f_0}{Q_{parallel}}$$

$$BW = \frac{23.6kHz}{74.1}$$

$$BW = 318Hz$$

$$f_1 \approx f_0 - \frac{BW}{2}$$

$$f_1 \approx 23.6kHz - \frac{318Hz}{2}$$

$$f_1 \approx 23.44kHz$$

$$f_2 \approx f_0 + \frac{BW}{2}$$

$$f_2 \approx 23.6kHz + \frac{318Hz}{2}$$

$$f_2 \approx 23.76kHz$$

To find the circuit voltage at f_0, simply multiply the resonant impedance of 549.5 kΩ times the source of 2 mA. This yields approximately 1100 volts.

Computer Simulation

The circuit of Example 8.3.1 is captured in a simulator as shown in Figure 8.3.7.

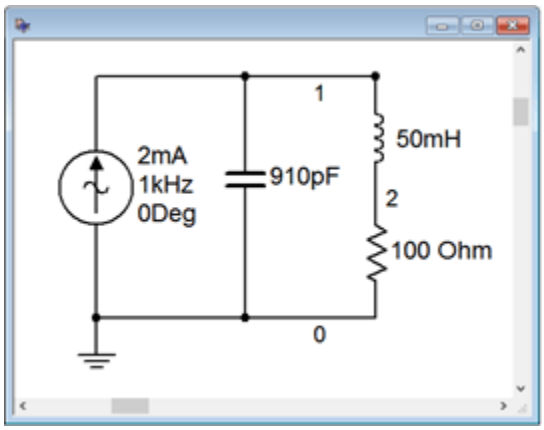

Figure 8.3.7: The circuit of Figure 8.3.6 in a simulator.

A frequency domain or AC analysis is run on the circuit, plotting the magnitude of the source voltage (node 1) from 2 kHz to 200 kHz. This will give us roughly a factor of ten on either side of the resonant frequency. The result is shown in Figure 8.3.8. The plot shows a clear and sharp peak in the low 20 kHz region. Note that the peak voltage is just over 1000 volts, as predicted. Figure 8.3.9 shows a magnified version of this plot so that we can accurately verify the peak voltage along with f_1 and f_2.

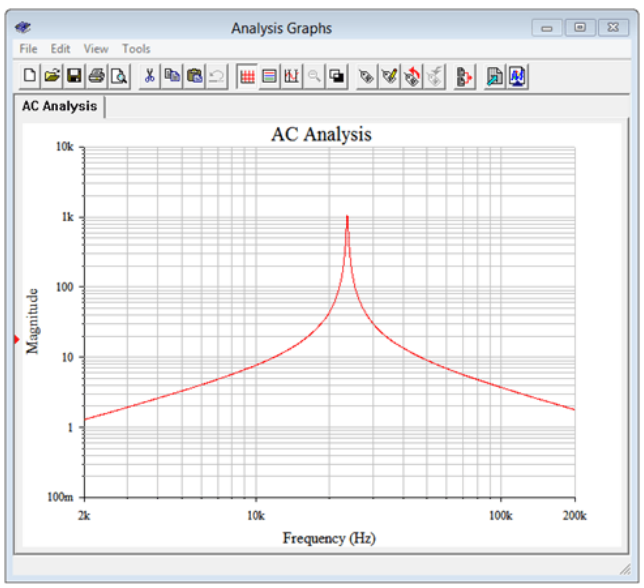

Figure 8.3.8: Source voltage of the circuit of Figure 8.3.7.

Figure 8.3.9 shows that the peak is indeed approximately 1100 volts. The f_1 and f_2 frequencies are found at 0.707 times this peak, or some 778 volts. Two measurement cursors are employed for this task. The Y values are the voltages at the cursor's intersection with the curve and the X values are the corresponding frequencies. We can see that the results are in tight agreement with the calculations. At levels of about 777 to 780 volts we obtain f_1 and f_2 values of approximately 23.44 kHz and 23.75 kHz, respectively.

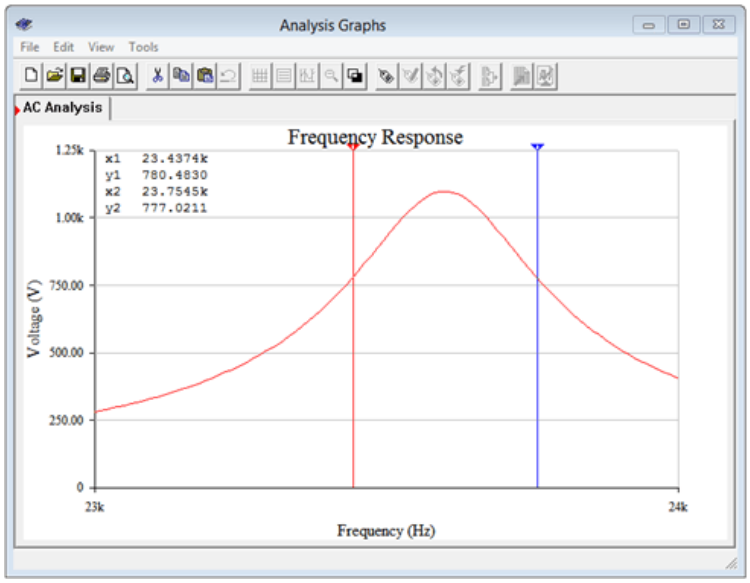

Figure 8.3.9: Magnified peak of the plot of Figure 8.3.8.

Example 8.3.2

For the circuit of Figure 8.3.10, determine the resonant frequency, the corner frequencies of f_1 and f_2, the bandwidth and the system Q. Also find the circuit voltage at the resonant frequency. $R_{coil} = 100\Omega$.

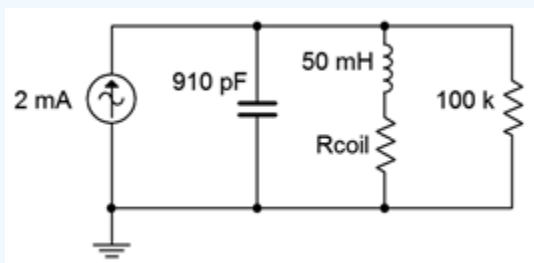

Figure 8.3.10: Circuit for Example 8.3.2.

This circuit is identical to the one in the previous example with the exception of an added 100 kΩ load resistor. This should lower the system Q and thus widen the bandwidth. The peak impedance will also be reduced which will cause a decrease in the system voltage at resonance. Some parameters will not change. They include:

$$f_0 = 23.6kHz$$

$$X_L = 7.41k\Omega$$

$$Q_{coil} = 74.1$$

$$R_p = 549.5k\Omega$$

We'll assume this is a high $Q(\geq 10)$ circuit.

Rp is in parallel with the load resistance of R yielding an effective parallel resistance of $549.5k\Omega||100k\Omega$, or 84.6 kΩ.

$$Q_{parallel} = \frac{R_T}{X_L}$$

$$Q_{parallel} = \frac{84.6k\Omega}{7.41k\Omega}$$

$$Q_{parallel} = 11.4$$

The circuit Q is much reduced but our initial assumption of high circuit Q is still met. Now we can find the bandwidth and corner frequencies.

$$BW = \frac{f_0}{Q_{parallel}}$$

$$BW = \frac{23.6kHz}{11.4}$$

$$BW = 2.07kHz$$

$$f_1 \approx f_0 - \frac{BW}{2}$$

$$f_1 \approx 23.6kHz - \frac{2.07kHz}{2}$$

$$f_1 \approx 22.56kHz$$

$$f_2 \approx f_0 + \frac{BW}{2}$$

$$f_2 \approx 23.6kHz + \frac{2.07kHz}{2}$$

$$f_2 \approx 24.64kHz$$

The circuit voltage at f_0 is reduced to 84.6 kΩ times 2 mA, or 169.2 volts.

Computer Simulation

The simulation results follow those of Example $8.3.1$ and are shown in Figure $8.3.11$. The results agree with the computed values. The peak voltage has been reduced to about 170 volts, and f_1 and f_2 (found at 0.707 times the peak, or approximately 120 volts) are about 22.5 kHz and 24.6 kHz, respectively.

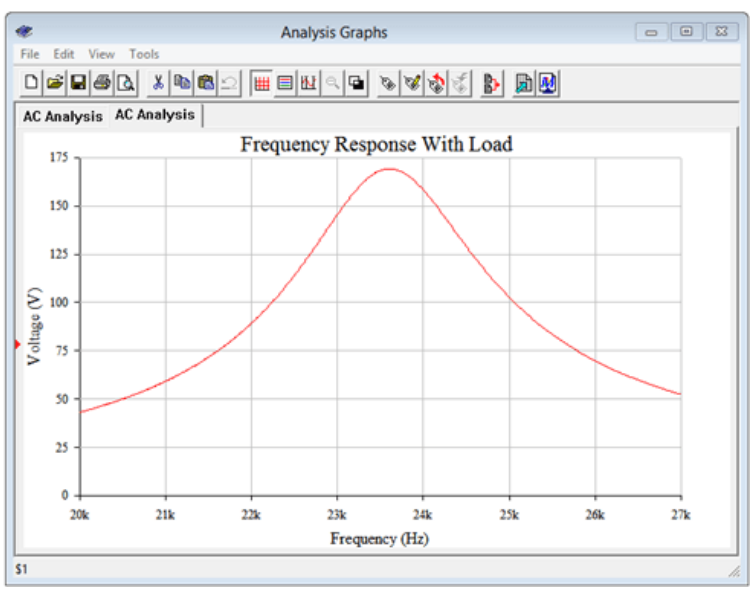

Figure $8.3.11$: Simulation results for the circuit of Example $8.3.2$.

Example 8.3.3

Consider the circuit of Figure 8.3.12 with the following parameters: L = 2 mH, C = 10 nF, and Q_{coil} = 25. Determine the resonant frequency and a value for R such that the system bandwidth is 3 kHz.

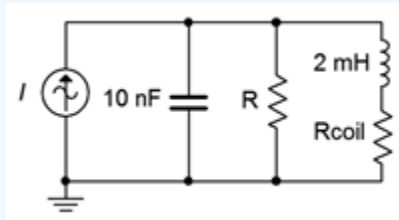

Figure 8.3.12: Circuit for Example 8.3.3.

As usual, we'll assume this is a high $Q(\geq 10)$ circuit. This is certainly true of the coil, although we have to determine the resonant frequency in order to determine the Q of the circuit.

$$f_0 = \frac{1}{2\pi\sqrt{LC}}$$

$$f_0 = \frac{1}{2\pi\sqrt{2mH10nF}}$$

$$f_0 = 35.59kHz$$

$$Q_{parallel} = \frac{f_0}{BW}$$

$$Q_{parallel} = \frac{35.59kHz}{3kHz}$$

$$Q_{parallel} = 11.86$$

We have high Q and can continue[1]. Ultimately, we need to determine the total parallel resistance required to achieve this Q. Before we can do that we need to determine X_L.

$$X_L = 2\pi fL$$

$$X_L = 2\pi 35.59kHz2mH$$

$$X_L = 447\Omega$$

$$R_T = Q_{parallel} \times X_L$$

$$R_T = 11.86 \times 447\Omega$$

$$R_T = 5.3k\Omega$$

R_T is the parallel combination of R and R_p (the parallel equivalent of R_{coil}), so first we need to find R_{coil}.

$$R_{coil} = \frac{X_L}{Q_{coil}}$$

$$R_{coil} = \frac{447\Omega}{25}$$

$$R_{coil} = 17.9\Omega$$

The parallel equivalent resistance of R_{coil} is:

$$R_p = R_{coil}Q_{coil}^2$$

$$R_p = 17.9\Omega 25^2$$

$$R_p = 11.18k\Omega$$

Using the conductance rule, we can find the requisite value of R.

$$R = \frac{1}{\frac{1}{R_T} - \frac{1}{R_p}}$$

$$R = \frac{1}{\frac{1}{5.3k\Omega} - \frac{1}{11.18k\Omega}}$$

$$R = 10.08k\Omega$$

Thus, we need to use a 10.08 kΩ resistor in order to lower the circuit Q enough to achieve a 3 kHz bandwidth. Without this resistor, the bandwidth will be less than half of what is required.

Computer Simulation

Figure $8.3.13$ shows the completed design of the previous example captured in a simulator. A 1 mA current source is used for convenience of calculation.

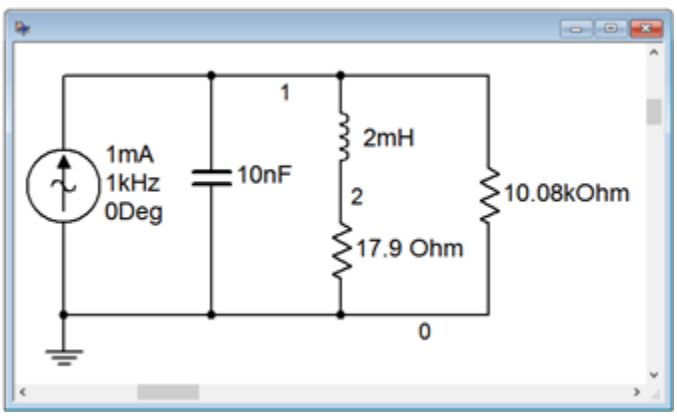

Figure $8.3.13$: Circuit design of Example $8.3.3$ in a simulator.

Given that R_T is 5.3 kΩ, the 1 mA current source should produce 5.3 volts at the resonance frequency of 35.59 kHz. The results of an AC analysis are shown in Figure $8.3.14$.

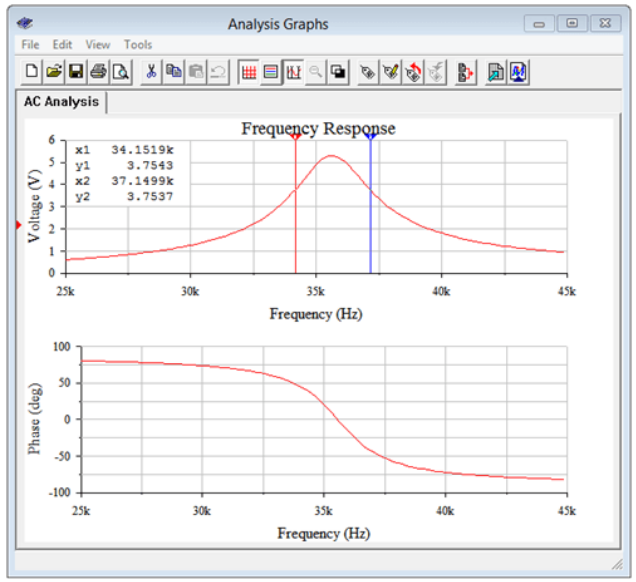

Figure 8.3.14: Frequency response of the design from Example 8.3.3.

First off, the f_0 of approximately 35.6 kHz is verified by both the peak in voltage and the phase angle reaching 0° at this frequency, the latter indicating perfect cancellation between the inductor and capacitor (i.e., the circuit impedance is purely resistive and achieving unity power factor). The cursors are used to obtain accurate values for f_1 and f_2. These frequencies are reached at 0.707 of the peak of 5.3 volts, or about 3.75 volts. The frequencies are approximately 34.15 kHz and 37.15 kHz, achieving the desired bandwidth of 3 kHz.

Low Q Parallel Resonance

There are some changes in the computations when $Q_{parallel}$ is low. Generally, this means values below 10, although we might think of values between 5 and 10 to be a transition region where deviations of two percentage points or less come into play. Once the circuit Q falls below 5, the deviations from the high Q equations grow rapidly and quickly rise into double digit percentages. The main item of interest here is the shift in f_0.

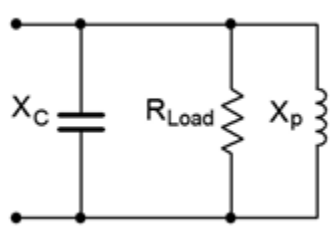

Figure 8.3.15: Parallel RLC network with exact series transform equivalent.

These deviations are caused by the fact that the approximations used for Equations 8.3.4 and 8.3.5 are no longer true. That is, with low Q_{coil} values, we can no longer assume that the transformed X_L is the same as the original X_L (i.e., X_p and X_s in Figure 8.3.4). Given this fact, we can revisit the basic parallel RLC circuit, but this time using the exact value from the series-to-parallel inductor transform. This is shown in Figure 8.3.15. R_{Load} is the combined resistance of the parallel network while X_p is the equivalent value obtained from Equation 8.3.3 (slightly modified and repeated for convenience):

$$X_p = \frac{X^2 + R^2}{X}$$

X and R in this equation are the original series values for the inductor. At f_0, the magnitudes of the reactances are equal, or $X_C = X_p$, therefore,

$$X_C = \frac{X^2 + R^2}{X}$$

Expanding yields:

$$\frac{1}{2\pi f_0 C} = \frac{(2\pi f_0 L)^2 + R^2}{2\pi f_0 L}$$

Now rearrange and simplify.

$$\frac{2\pi f_0 L}{2\pi f_0 C} = (2\pi f_0 L)^2 + R^2$$

$$\frac{L}{C} = (2\pi f_0 L)^2 + R^2$$

$$(2\pi f_0 L)^2 = \frac{L}{C} - R^2$$

$$2\pi f_0 L = \sqrt{\frac{L}{C} - R^2}$$

$$2\pi f_0 = \sqrt{\frac{1}{LC} - \frac{R^2}{L^2}}$$

$$2\pi f_0 = \frac{1}{\sqrt{LC}}\sqrt{1 - \frac{CR^2}{L}}$$

And finally we come to:

$$f_0 = \frac{1}{2\pi\sqrt{LC}}\sqrt{1 - \frac{CR^2}{L}} \tag{8.3.18}$$

If desired, we can treat the first term as the ordinary series resonant frequency and the second term as a fractional coefficient, as in:

$$f_0 = f_{series} k_p \tag{8.3.19}$$

Where

$$k_p = \sqrt{1 - \frac{CR^2}{L}} \tag{8.3.20}$$

Using Equation $8.3.7$, k_p may also be expressed as:

$$k_p = \sqrt{1 - \frac{1}{Q^2}} \tag{8.3.21}$$

Examining Equation $8.3.20$ might lead to some concern, namely, what happens if the second term is greater than or equal to 1? Remember, the definition we're using for resonance is the frequency at which the reactances cancel, which means the phase angle is 0° (unity power factor). If the second term is greater than or equal to 1, the phase shift will never reach 0°, and by that definition, we don't really have a resonant circuit anymore.

We will explore the reality of this situation by starting with a simple high Q parallel circuit and then investigate the changes in the magnitude and phase response as the Q is decreased. We begin with the circuit of Figure $8.3.16$.

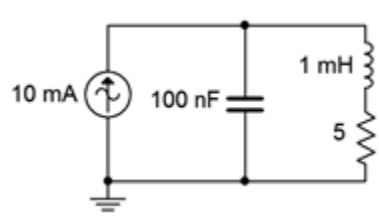

Figure $8.3.16$: A basic parallel network.

Assuming we have high circuit Q, the resonant frequency is:

$$f_0 = \frac{1}{2\pi\sqrt{LC}}$$

$$f_0 = \frac{1}{2\pi\sqrt{1mH100nF}}$$

$$f_0 = 15.92kHz$$

$$X_L = 2\pi fL$$

$$X_L = 2\pi 15.92kHz1mH$$

$$X_L = 100\Omega$$

$$Q_{coil} = \frac{X_L}{R_{coil}}$$

$$Q_{coil} = \frac{100\Omega}{5\Omega}$$

$$Q_{coil} = 20$$

There are no other resistances in the circuit, therefore $Q_{circuit} = Q_{coil}$ and our initial assumption is correct. The circuit is captured in a simulator and an AC analysis is performed. The resulting plots are shown in Figure $8.3.17$.

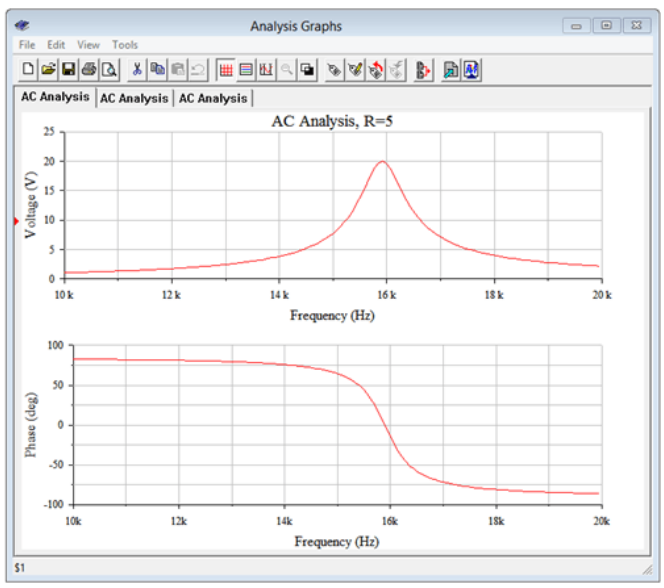

Figure $8.3.17$: Simulation results using a coil resistance of 5 Ω (Q of 20).

The resonant frequency appears to be just under 16 kHz, as predicted. Cursor-based measurement of the frequency at which the phase crosses 0° yields 15.89 kHz. This turns out to be even closer than it seems. In spite of the high circuit Q, k_p was calculated and as expected is very close to unity, namely 0.99875. When multiplied by the ideal f_0 (i.e., using Equation $8.3.19$), we arrive at 15.90 kHz. Splitting hairs perhaps, but it's good to know the deviation is shrinking.

Next, the coil resistance is raised to 50 Ω, yielding a Q of only 2. The simulation is run a second time. k_p drops to 0.866 with this lowered Q and should produce an f_0 of approximately 13.77 kHz. The plots are shown in Figure $8.3.18$, and zoomed in for a better view. From the lower graph it is obvious that the frequency where the curve reaches 0° is just below 14 kHz. Accurate measurement yields 13.78 kHz, right in line with the theoretical computation.

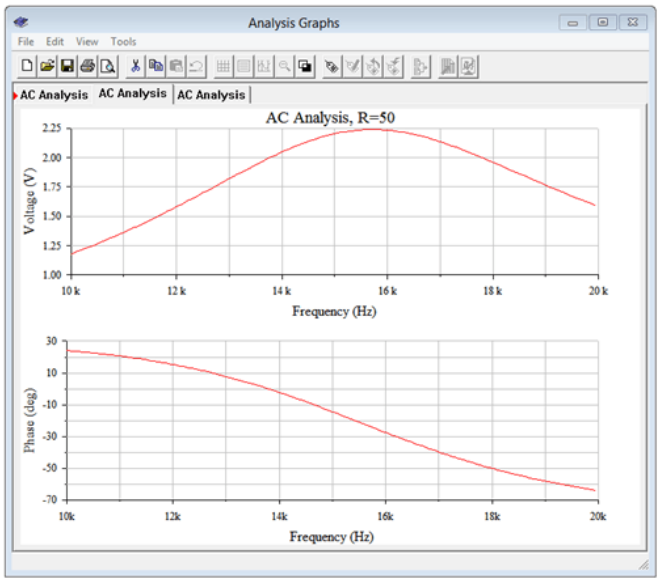

Figure $8.3.18$: Simulation results using a coil resistance of 50 Ω (Q of 2).

Finally, the coil resistance is increased to 100 Ω. This drops the circuit Q to 1 and more importantly, brings k_p down to 0. The resulting simulation plots are shown in Figure $8.3.19$. At first glance the phase plot looks similar to that of Figure $8.3.17$, however, notice that the phase scale has changed with 0° as the maximum. In fact, the phase shift never quite reaches 0°. In this regard we can still say that the k_p equation remains an accurate predictor.

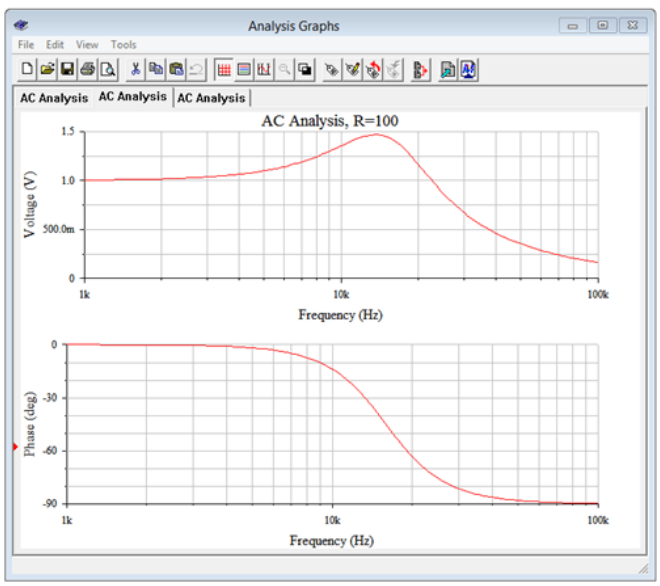

Figure $8.3.19$: Simulation results using a coil resistance of 100 Ω (Q of 1).

Alternate Definition for Parallel Resonant Frequency

Instead of defining the parallel resonant frequency as the point where the power factor is unity, i.e., where X_L and X_C have the same magnitude, it can be defined in terms of the frequency where the magnitude of the impedance is maximum. For high Q circuits the two definitions produce essentially the same frequency, however, as the circuit Q decreases into the single digits, the frequency of maximum impedance begins to deviate from both the high Q idealization and the general unity power factor definition. In fact, the frequency of maximum magnitude is situated between the two. We shall refer to this frequency as f_{Z-max} to avoid confusion. The formula is[2]:

$$f_{\text{Z-max}} = f_0\sqrt{\sqrt{\frac{2}{Q_{circuit}^2}+1}-\frac{1}{Q_{circuit}^2}} \tag{8.3.22}$$

This equation will yield a value between the ideal high Q case and the unity power factor case. This can be seen in Figure $8.3.19$ where there is still an impedance peak (as evidenced by the voltage peak) in spite of the fact that a phase angle of 0° is not reached. Furthermore, the frequency of the peak is below that of the high Q case. Equation $8.3.22$ predicts a peak at 13.6 kHz which agrees with the value obtained from the simulation.

Combination Series and Parallel Resonance

In closing our discussion on resonance we might ask whether or not there are practical, everyday examples of systems exhibiting series and parallel resonance in series-parallel circuits. The answer is yes. A good example is that of a basic dynamic moving coil loudspeaker of the type seen in Chapter 2. This is an electro-mechanical system and thus a proper model has to include the effects of such items as the mechanical losses in the system, the mass of the cone, and the like. One possibility is shown in Figure $8.3.20$. L_{vc} and R_{vc} are the inductance and resistance of the voice coil. The remaining components model other aspects of the electro-mechanical system. An impedance plot of a typical loudspeaker is shown in Figure $8.3.21$.

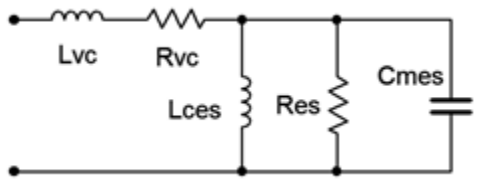

Figure $8.3.20$: Equivalent electrical network of a single dynamic loudspeaker. Adapted from R.H.Small, “Direct-Radiator Loudspeaker System Analysis”, Journal of the Audio Engineering Society, June 1972

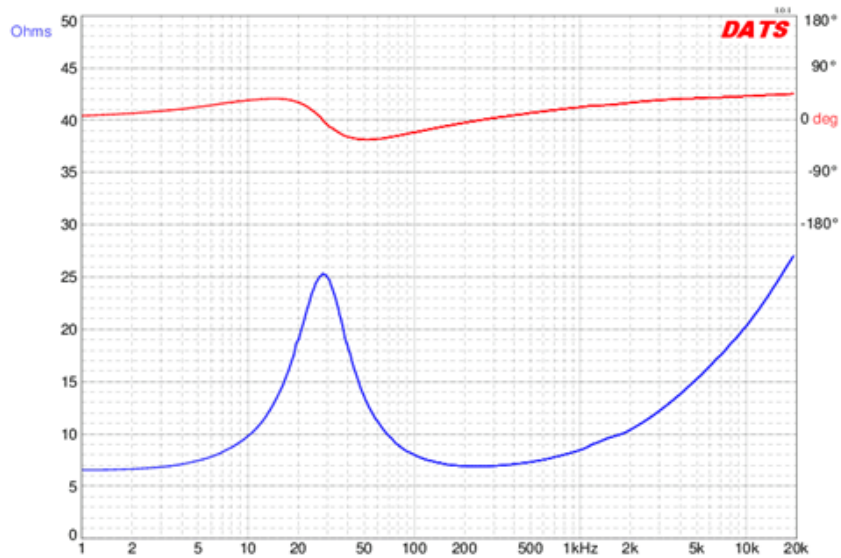

Figure $8.3.21$: Impedance magnitude and phase of a typical dynamic loudspeaker. Courtesy Dayton Audio

The loudspeaker of Figure $8.3.21$ is a medium-size woofer with a nominal impedance of 8 Ω. First, note the large variation on both the phase and magnitude of the impedance. The parallel items from the model produce an obvious peak in impedance just below 30 Hz. This is referred to as the free air resonance and is denoted by f_s. For this device, the magnitude is over three times the nominal value. Also note that the phase angle is 0° at f_s, and that the phase is positive (inductive) below the resonant frequency and negative (capacitive) above it. This behavior is expected from a parallel resonant system. The series elements of the model create the rising impedance that is seen following the dip. Note that the phase angle continues to increase as frequency rises, indicating the growing dominance of the series inductive element.

References

[1]Note that if this value had been greater than 25 we'd be stuck for a different reason; namely that we'd need to obtain a higher quality inductor because $Q_{circuit}$ can't be any higher than Q_{coil}.

[2]For a non-calculus proof, see K. Cartwright, E. Joseph, E. Kaminsky, “Finding the Exact Maximum Impedance Resonant Frequency of a Practical Parallel Resonant Circuit Without Calculus”, Technology Interface International Journal, vol. 11, no. 1, Fall/Winter 2010. [Online Serial]. Available: http://tiij.org/issues/issues/winter...inter_2010.htm [Accessed February 15, 2020].

This page titled 8.3: Parallel Resonance is shared under a CC BY-NC-SA 4.0 license and was authored, remixed, and/or curated by James M. Fiore via source content that was edited to the style and standards of the LibreTexts platform.

8.4: Summary

Resonance can be described as a preferred mode of vibration, or a frequency at which a system operates particularly well. Resonant systems can be used to filter out or select specific frequencies across the spectrum. Obvious uses include tuning circuits, oscillators, filters and the like. In electrical systems there are two basic forms; series RLC resonance and parallel RLC resonance. Series resonance tends to be the less complicated of the two.

For series resonance, the resonant frequency, f_0, is defined as the frequency at which the magnitude of X_L equals the magnitude of X_C. In this instance, the reactances cancel, leaving the series impedance as R. This creates a U-shaped curve for the impedance as it varies across the frequency spectrum. At low frequencies, the capacitive reactance dominates and the series impedance is high in magnitude and capacitive. At frequencies above the resonant frequency, the inductive reactance dominates and the series impedance is again high in magnitude but it is inductive. If this circuit is driven with a constant voltage source, the current will be maximum at resonance and tail off at lower and higher frequencies. The sharpness of the current curve across frequency is a function of the system Q, or quality factor. A high Q circuit is one with a very sharp and narrow curve. The "shoulders" of the curve are defined as the frequencies at which the power has dropped to one half of the value at resonance. This corresponds to 0.707 times the current at resonance. The lower frequency is f_1 and the upper frequency is f_2. The difference between the two is called the bandwidth, BW. The ratio of resonant frequency to the bandwidth yields the circuit Q. Circuit Q can also be found by dividing the magnitude of reactance at resonance to the total circuit resistance. In high Q circuits it is possible for the voltage across the inductor or capacitor to be many times higher than the source voltage, higher in fact, by a factor of Q.

Parallel resonance is similar to series resonance but in some ways is like its mirror image. In a parallel resonant circuit the inductor will dominate at low frequencies and produce a small net impedance. At high frequencies, the capacitor will dominate and also produce a small net impedance. At resonance, the two effectively will cancel and yield a large impedance. In other words, the impedance versus frequency curve will appear like an upside down U, producing maximum impedance at resonance, and the opposite of the series impedance curve. If this system is driven by a constant current source, the resulting voltage will echo the shape of the impedance curve, producing maximum voltage at resonance. The upper and lower frequencies, along with the bandwidth and system Q, are defined in the same manner as they are in the series case (with one exception regarding finding Q via resistance and reactance).

There is one important caveat regarding parallel resonant circuits. Practical inductors contain a non-trivial series coil resistance. This can play a dominant role in the system response. Analysis is generally handled by performing a series to parallel transform which creates a parallel resistance out of the inductor's series resistance. As a result, system Q can be found as the ratio of effective parallel resistance to maximum reactive magnitude, the opposite of the series case. For high Q systems, generally taken as 10 or higher, the resonant frequency can use the same equation as the series case. For low Q systems, the series to parallel transform creates a shift in resonant frequency, making it somewhat lower than the value obtained from the basic series equation. Also, the inductor and capacitor currents will be approximately Q times higher than the source current, made possible because they are 180 degrees out of phase with each other and effectively cancel.

In both series and parallel systems, for high Q, f_1 and f_2 are assumed to lie equidistant from f_0, splitting BW in half on either side. This is just an approximation and errors will grow as the Q decreases. More accurately, the two frequencies lie where the ratio of f_1/f_0 is the same as the ratio of f_0/f_2.

Review Questions

1. Describe the concept of resonance. How is resonance defined in a series RLC network?

2. Sketch the impedance versus frequency plot for series resonance.

3. Sketch the impedance versus frequency plot for parallel resonance.

4. Define the terms resonant frequency, bandwidth and Q.

5. How does inductor Q impact system Q in resonant circuits?

This page titled 8.4: Summary is shared under a CC BY-NC-SA 4.0 license and was authored, remixed, and/or curated by James M. Fiore via source content that was edited to the style and standards of the LibreTexts platform.

8.5: Exercises

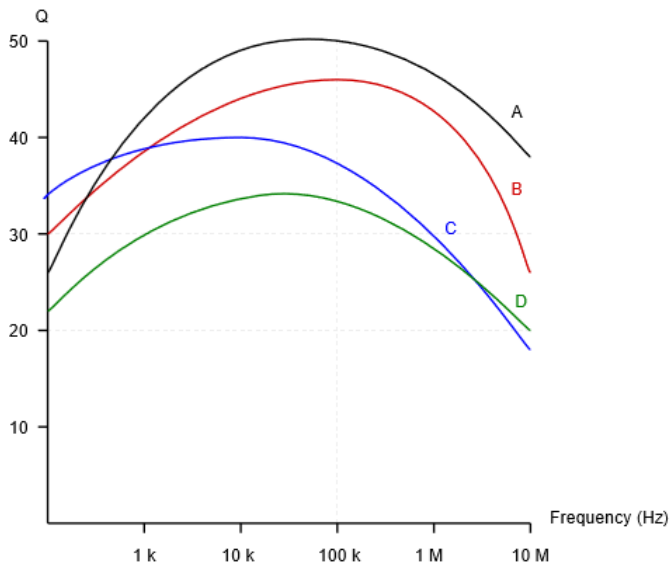

Inductor Q curves to be used with the exercises below

Analysis

1. A circuit has a resonant frequency of 440 kHz and a system Q of 30. Determine the bandwidth and the approximate values for f_1 and f_2.

2. A circuit has a resonant frequency of 19 kHz and a bandwidth of 500 Hz. Determine the system Q and the approximate values for f_1 and f_2.

3. Find the Q_{coil} and coil resistance of a 150 μH inductor at 100 kHz using device curve A.

4. Find the Q_{coil} and coil resistance of a 2.2 mH inductor at 50 kHz using device curve D.

5. At a certain frequency, an inductor's impedance is $24 + j600\ \Omega$. Determine the parallel resistance and reactance that produces the same value.

6. At a certain frequency, an inductor's impedance is $3 + j150\ \Omega$. Determine the parallel resistance and reactance that produces the same value.

7. A certain 75 μH inductor is described by curve B. Determine the equivalent parallel inductor/resistor combination at 1 MHz.

8. A certain 3.3 mH inductor is described by curve C. Determine the equivalent parallel inductor/resistor combination at 20 kHz.

9. Consider a series circuit consisting of a 2 nF capacitor, an ideal 33 μH inductor and a 5 Ω resistor. Determine the resonant frequency, system Q, and bandwidth.

10. Consider a series circuit consisting of a 20 nF capacitor, an ideal 100 μH inductor and a 2.7 Ω resistor. Determine the resonant frequency, system Q, and bandwidth.

11. Consider a series circuit consisting of a 50 nF capacitor, a 20 mH inductor with Q_{coil} of 50 and a 63 Ω resistor. Determine the resonant frequency, system Q, and bandwidth.

12. Consider a series circuit consisting of a 200 nF capacitor, a 1 mH inductor with Q_{coil} of 65 and a 72 Ω resistor. Determine the

resonant frequency, system Q, and bandwidth.

13. For the circuit shown in Figure $8.5.1$, determine the resonant frequency, system Q and bandwidth. Assume $R_{coil} = 0\ \Omega$. If the source is 1 volt peak, determine the capacitor voltage at resonance.

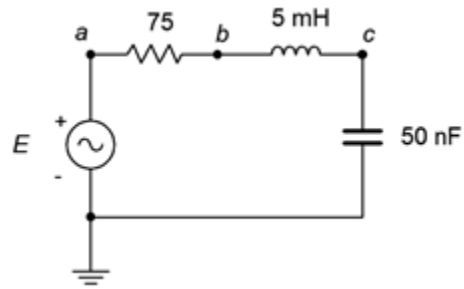

Figure $8.5.1$

14. For the circuit shown in Figure $8.5.2$, determine the resonant frequency, system Q and bandwidth. Assume $R_{coil} = 0\ \Omega$. If the source is 10 volts, determine the capacitor voltage at resonance.

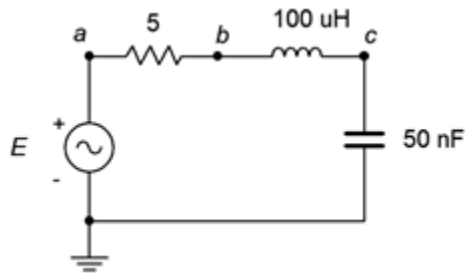

Figure $8.5.2$

15. Repeat problem 13 but assume instead that the inductor's $R_{coil} = 15\ \Omega$.

16. Repeat problem 12 but assume instead that the inductor follows curve D.

17. For the circuit shown in Figure $8.5.3$, determine the resonant frequency, system Q and bandwidth. If the source is 20 mA peak, determine the resistor and capacitor voltages at resonance.

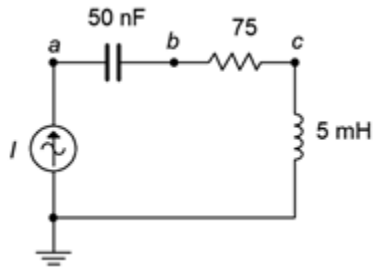

Figure $8.5.3$

18. For the circuit shown in Figure $8.5.4$, determine the resonant frequency, system Q and bandwidth. If the source is 100 mA, determine the resistor and capacitor voltages at resonance.

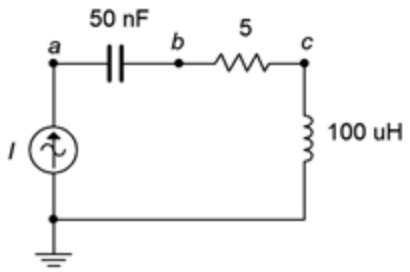

Figure $8.5.4$

19. For the circuit shown in Figure $8.5.5$, determine the resonant frequency, system Q and bandwidth. If the source is 15 volts, determine the inductor and capacitor currents at resonance. Assume the inductor's coil resistance is 3.2 Ω.

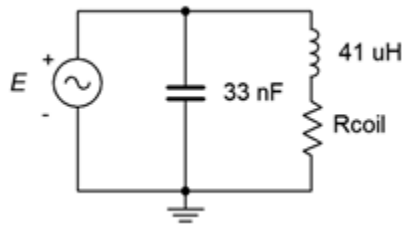

Figure $8.5.5$

20. For the circuit shown in Figure $8.5.6$, determine the resonant frequency, system Q and bandwidth. If the source is 3 volts, determine the inductor and capacitor currents at resonance. Assume the inductor's Q is 30.

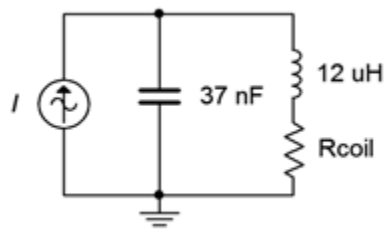

Figure $8.5.6$

21. For the circuit shown in Figure $8.5.7$, determine the resonant frequency, system Q and bandwidth. If the source is 15 volts, determine the resistor, inductor and capacitor currents at resonance.

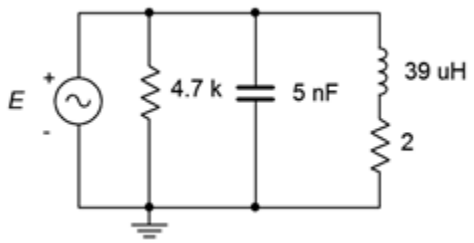

Figure $8.5.7$

22. Given the circuit shown in Figure $8.5.8$, determine the resonant frequency, system Q and bandwidth. If the source is 2 volts, determine the resistor, inductor and capacitor currents at resonance. Assume the inductor's coil resistance is 2.5 Ω.

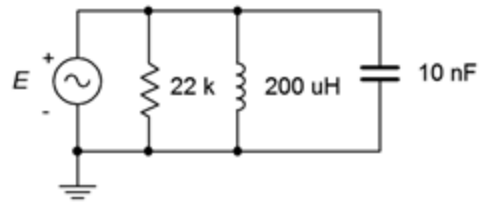

Figure $8.5.8$

23. For the circuit shown in Figure $8.5.9$, determine the resonant frequency, system Q and bandwidth. If the source is 5 volts, determine the resistor, inductor and capacitor currents at resonance. Assume the inductor's Q is 40.

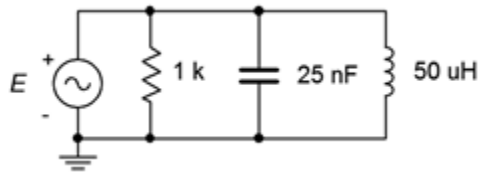

Figure $8.5.9$

24. Given the circuit shown in Figure $8.5.10$, determine the resonant frequency, system Q and bandwidth. If the source is 2.5 mA, determine the resistor voltage and the three branch currents at resonance.

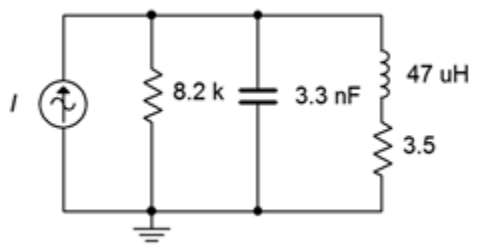

Figure $8.5.10$

25. For the circuit shown in Figure $8.5.11$, determine the resonant frequency, system Q and bandwidth. If the source is 500 μA, determine the resistor voltage and the three branch currents at resonance. Assume the inductor's Q is given by curve C.

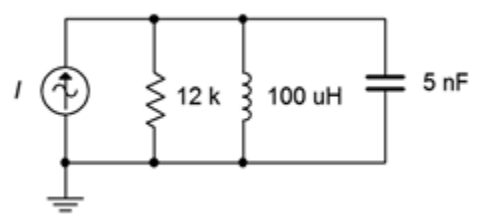

Figure $8.5.11$

26. Given the circuit shown in Figure $8.5.12$, determine the resonant frequency, system Q and bandwidth. If the source is 10 mA, determine the resistor voltage and the three branch currents at resonance. Assume the inductor's Q is given by curve B.

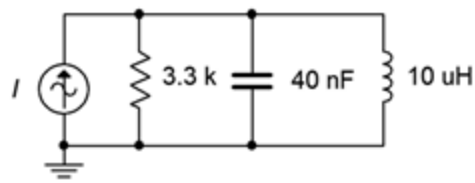

Figure $8.5.12$

Design

27. A series resonant circuit has a required f_0 of 50 kHz. If a 75 nF capacitor is used, determine the required inductance.

28. A series resonant circuit has a required f_0 of 210 kHz. If a 22 μH inductor is used, determine the required capacitance.

29. A parallel resonant circuit consists of a 12 nF capacitor and a 27 μH inductor with a Q_{coil} of 55. Determine the required additional parallel resistance to achieve a system Q of 40.

30. A series resonant circuit has a design target of $f_0 = 200$ kHz with a bandwidth of 5 kHz. Which of the inductor curves above (A, B, C, D) represent possible candidates, if any, and why/why not?

31. A parallel resonant circuit has a design target of $f_0 = 1$ MHz with a bandwidth of 20 kHz. Which of the inductor curves above (A, B, C, D) represent possible candidates, if any, and why/why not?

Challenge

32. A parallel resonant circuit has a required f_0 of 50 kHz and a bandwidth of 4 kHz. If a 75 nF capacitor is used and the load impedance is 100 kΩ, determine the required inductance and minimum acceptable Q_{coil}.

33. A parallel resonant circuit consists of a 150 nF capacitor and a 200 μH inductor that has a coil resistance of 1 Ω. The desired bandwidth for the network is 2 kHz. Determine the value of resistance to be placed in parallel with the network in order to achieve this goal.

34. A resonant circuit consists of a 4 nF capacitor in parallel with a 100 μH coil that has a coil resistance of 5 Ω. Determine the resonant frequency and bandwidth. Further, assume that this circuit is now loaded by an amplifier that has an input impedance equivalent to 10 kΩ resistive in parallel with 500 pF of input capacitance. Also, the amplifier is connected via 25 feet of coaxial cable that exhibits a capacitance of 33 pF per foot. Determine the changes in resonant frequency and bandwidth, if any, with this load.

Simulation

35. Use an AC frequency domain analysis to verify the results of problem 13. Plot the resistor voltage from 0.1 f_0 to 10 f_0.

36. Use an AC frequency domain analysis to verify the results of problem 19. Do this by overlapping plots of the resistor, capacitor and inductor voltages across a range of 0.1 f_0 to 10 f_0.

37. Investigate the effects of inductor Q on the system bandwidth of problem 21. Plot the system voltage from 0.01 f_0 to 100 f_0 three times, the first using the specified coil resistance and then using values ten times larger and ten times smaller.

38. Investigate the effects of component tolerance on the system frequency response of problem 21. Plot the system voltage from 0.1 f_0 to 10 f_0 using a Monte Carlo variation on the AC frequency domain response. Set a 10% tolerance on the capacitor, inductor and resistor but do not alter the coil resistance.

39. Use an AC frequency domain analysis to verify the design of problem 27. Plot the resistor voltage from 0.1 f_0 to 10 f_0.

40. Use an AC frequency domain analysis to verify the design of problem 29. Plot the system voltage from 0.1 f_0 to 10 f_0.

41. At high Q values (>10) the capacitor and inductor voltages of series resonant circuits will tend to reach maximum very close to the resonant frequency. At lower Qs, these peaks tend to diverge. A similar situation occurs with the currents in parallel resonant circuits. Investigate this effect by performing an AC frequency domain analysis on problem 14. Overlay plots of v_{ab}, v_{bc} and v_c for successively larger values of resistance.

42. Investigate the "Q increase" in reactive currents compared to source and resistive currents in a parallel resonant circuit. A simple way to verify this is by placing AC ammeters in each of the branches of the circuit shown in Figure $8.5.13$. Use R = 630 Ω, C = 40 nF, L = 10 μH and i = 1 mA. It is worthwhile to compare sets of simulations for different resistor values to see the current changes relative to the system Q. Slight variations of the source frequency may be required to reach the peak.

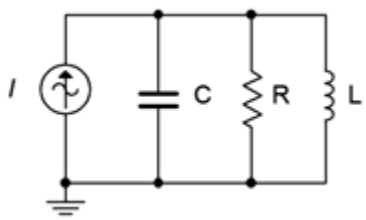

Figure $8.5.13$

This page titled 8.5: Exercises is shared under a CC BY-NC-SA 4.0 license and was authored, remixed, and/or curated by James M. Fiore via source content that was edited to the style and standards of the LibreTexts platform.

9: POLYPHASE POWER

Learning Objectives

After completing this chapter, you should be able to:

- Define the differences between polyphase and single phase systems and detail their advantages.
- Determine line voltage, line current, phase voltage and phase current in three-phase systems.
- Analyze three-phase systems in both delta (Δ) and Y (wye) configurations.

9.1: Introduction to Polyphase Power

9.2: Polyphase Definition

9.3: Three-Phase Connections

9.4: Power Factor Correction

9.5: Summary

9.6: Exercises

This page titled 9: Polyphase Power is shared under a CC BY-NC-SA 4.0 license and was authored, remixed, and/or curated by James M. Fiore via source content that was edited to the style and standards of the LibreTexts platform.

9.1: Introduction to Polyphase Power

In this chapter we shall introduce the concept of polyphase systems. Polyphase systems can be visualized as a group of individual sources of the same magnitude that are separated by a certain phase angle such that they are evenly divided across a single period. The polyphase load is similarly divided into individual sections or legs. By dividing the sources, the application of power can be much more smooth. Further, for the same total load power, the current delivered by each of the segments is reduced compared to a single phase system. For an analogy we could look at a bicycle. A single phase system is like pedaling with only one leg. That is, power is applied in a single burst per revolution of the pedal. Having two pedals is like a two-phase system; power is delivered twice per revolution, once for the right leg and once for the left. Because there are two pedals, it makes sense to separate them physically by 180 degrees or one half of a revolution, otherwise the power delivery will not be smooth. It should obvious to anyone who has pedaled a bike that you must pump a single pedal much harder using only one leg to achieve the same speed obtained when pumping with both legs.

Polyphase loads can be balanced or unbalanced. A balanced load means that all legs or sections of the load exhibit the same impedance. Consequently, the currents supplied by the sources will be the same except for the phase shifts between them. It is possible to create a polyphase system using any number of phases, however, the more phases we add, the more complex the construction of the polyphase source and load. Also, the number of required conductors between the source and load increases (one per phase). These all increase construction, installation and maintenance costs. Polyphase systems using three sections (hereafter simply referred to as three-phase systems) are popular because they deliver the benefits of polyphase while limiting the complexity and minimizing the costs. Therefore, we shall our limit our discussion to three-phase systems utilizing balanced loads.

Three-phase systems can be wired in either delta or Y configurations, or a combination. These are reminiscent of the delta and Y constructs seen in earlier chapters. We shall investigate all of the combinations to determine system parameters such as line voltage, line current and load power. We will also investigate power factor correction for balanced loads that have a non-negligible phase angle.

This page titled 9.1: Introduction to Polyphase Power is shared under a CC BY-NC-SA 4.0 license and was authored, remixed, and/or curated by James M. Fiore via source content that was edited to the style and standards of the LibreTexts platform.

9.2: Polyphase Definition

A polyphase system uses multiple current-carrying wires with multiple subgenerators, each with their own unique phase. This allows for considerable delivery of power to the load. The most popular scheme is the three-phase configuration. This can be visualized as three individual sine generators that are interconnected as shown in Figure $9.2.1$. To the left is a Y (also known as wye or T) connected generator. To the right is a delta (i.e. Δ, and also known as π when drawn upside down) connected generator.

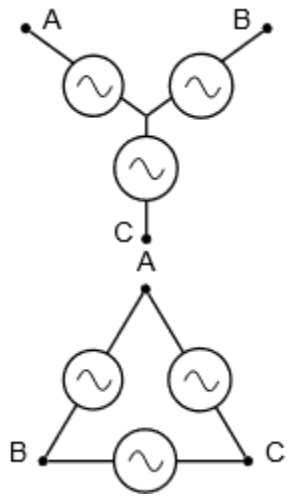

Figure $9.2.1$: Three-phase generators: Y-connected (left) and delta-connected (right).

There are multiple ways of reproducing these generators on schematics. Some alternate forms for Y-connected generators are shown in Figure $9.2.2$. The lone "tail" shown on the version to the right is a connection back to the common center of the three sub-generators. This is called the neutral line. It is not always used.

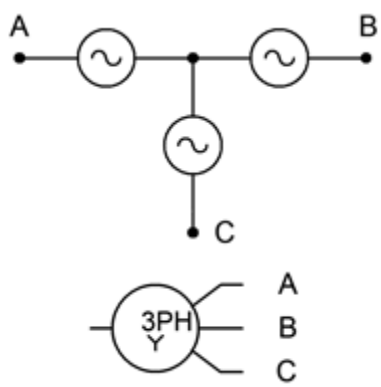

Figure $9.2.2$: Alternate schematic symbols for Y-connected generators.

In Figure $9.2.3$ we have some alternate forms for delta-connected generators. Delta generators do not have the optional fourth connection as there is no common center point. Also, note that the version on the left is drawn upside down (i.e., in the π configuration).

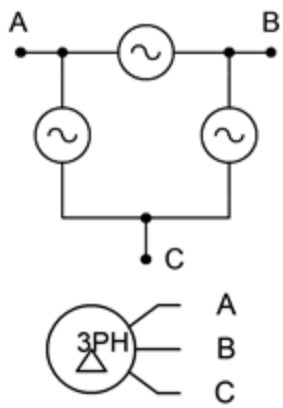

Figure 9.2.3: Alternate schematic symbols for delta-connected generators.

Of particular importance is the relative phase of each source. As the load will also have three segments or legs (a three-phase load), a consistent delivery of power demands that the three sources be spread equally over time. This means that each source is one-third of a cycle, or 120 degrees, out of phase with the other legs (i.e., leading one and lagging the other). This is shown in Figure 9.2.4. We shall only consider the case of balanced loads, that is, where each leg of the load is identical to the other legs.

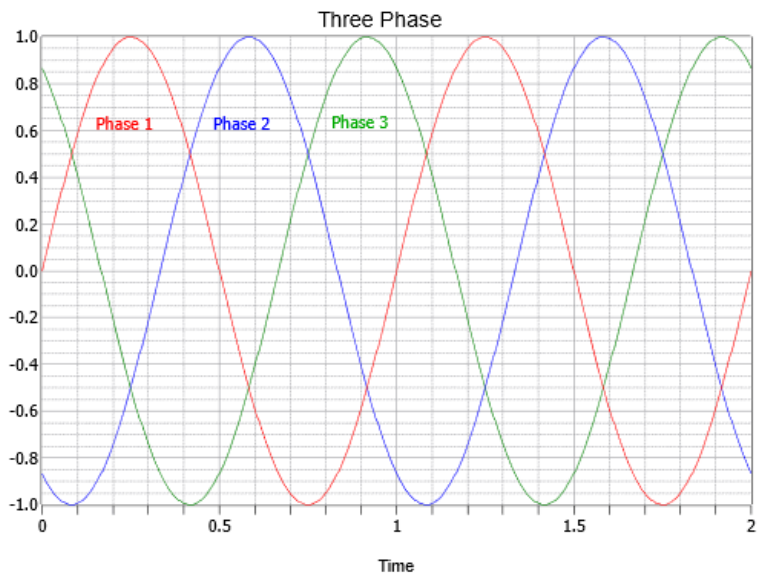

Figure 9.2.4: Relative phases of the three sub-generators.

Notice the effectiveness of using the 120 degree stagger. At any time there is always either a peak or the shoulders of two adjacent peaks. These peaks can be either positive or negative polarity. This makes for a total of six peaks across the waveform's period. Therefore, a null is never more than 30 degrees away from the nearest peak. Indeed, when it is 30 degrees away, then it's precisely in between two peaks, and the value from each is the sine of 60 degrees (i.e., 30 degrees off of the peak at 90 degrees) or 86.6% of the peak value. Thus, it should be obvious that consistent power can be applied by this system. The inevitable car analogy is that we have gone from a two cylinder engine to a six cylinder engine when moving from single phase to three-phase.

There are several ways to connect three-phase generators to three-phase loads, as we shall see in the next section.

This page titled 9.2: Polyphase Definition is shared under a CC BY-NC-SA 4.0 license and was authored, remixed, and/or curated by James M. Fiore via source content that was edited to the style and standards of the LibreTexts platform.

9.3: Three-Phase Connections

It is possible to configure systems using delta- or Y-connected sources with either delta- or Y-connected loads. One item to note is that delta-connected systems are always three wire systems while Y-connected systems can make use of a fourth neutral wire (the common point to which all three sources connect).

Homogeneous Systems

The most straightforward systems are delta-to-delta and Y-to-Y. We shall refer to these as homogeneous systems as the structures of the generator and load are similar. Examples are shown in Figures $9.3.1$ and $9.3.2$, respectively.

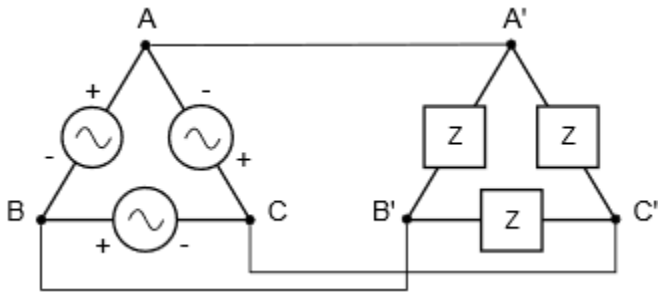

Figure $9.3.1$: A delta-connected generator with a delta-connected load (delta-delta).

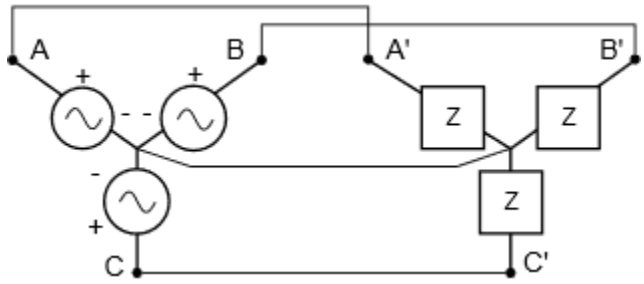

Figure $9.3.2$: A Y-connected generator with a Y-connected load (Y-Y). Optional fourth neutral wire from center to center shown.

In these configurations, each leg of the load matches up with a corresponding leg of the generator. In the delta-delta configuration of Figure $9.3.1$, it should be obvious just by inspection that the voltage across any load leg must equal the voltage of the corresponding generator leg. For example, the load impedance connected between A' and B' must see the voltage presented by the generator situated between A and B because A is directly connected to A' as is B to B'. Similarly, for the Y-Y configuration of Figure $9.3.2$, the current through any load leg must equal the current flowing through the associated generator leg as there are no other paths for current between A and A', B and B', and C and C'.

As the load is balanced and the legs of the generator are identical except for their phase, it must be the case that the voltages and currents (and hence the powers) for each leg of the load must be the same, with the exception of the phase. This is true for both the Y-Y configuration as well as the delta-delta configuration. The tricky bit here is the difference between a source (or load) current or voltage, and the line current or voltage.

$$\text{Line voltage is the voltage magnitude between any two conductors connecting the source to the load, excluding ground or common.}$$

$$\text{Line current is the current magnitude flowing in any conductor connecting the source to the load, excluding ground or common.}$$

Consider the delta-delta system of Figure $9.3.1$. We have already established that the voltage developed by generator A, B must be the same as the voltage across the load A', B'. Thus, the voltage measured from the A, A' conductor to the B,B' conductor must be the same as source and and load voltages. In other words, in the delta-delta configuration, the source, load, and line voltages are all the same.

We also found that the source and load currents must be the same for the delta-delta configuration, however, this does not imply

that the current flowing through the wire connecting A toA' must be the same as the current flowing through either the generator or the load. After all, two load wires connect to A', not just one. By definition, the current flowing through that wire is the line current, and therefore in a delta-delta configuration, the line current is not the same as the source or load currents. To avoid confusion, the voltage or current associated with a single leg is referred to as the phase voltage or current versus the line voltage or current.

Turning to the Y-Y configuration of Figure $9.3.2$, we see an opposite situation. The source, load, and line currents will all be the same. On the other hand, the line voltage comprises two generators, not one (e.g., from A to B or from B to C). Thus, for a Y-Y configuration the source and load voltages are the same, but they are not equal to the line voltage (nor is twice, thanks to the phase shift).

Determining Line Voltage and Current

In order to determine the line voltage for a Y-connected generator (and similarly, the line current for a delta connected generator), it is useful to examine a phasor plot of the individual generator voltages. This is shown in Figure $9.3.3$. We have three voltages of identical amplitude, the only difference between them being their phase. Each vector is separated from the others by 120 degrees. Further, each individual generator is connected from the common point to one of the external points of A, B and C. Line voltage is defined as the potential existing between any two if these three points. While it's possible to simply subtract one generator voltage from another to arrive at the difference, there is a nice graphical solution from which we can derive a precise formula for the line voltage given the generator voltage.

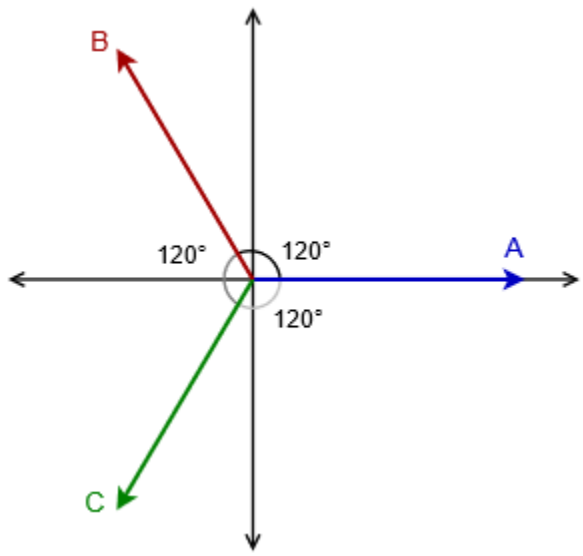

Figure $9.3.3$: Phasor diagram of Y-connected generator

We begin by focusing on quadrants two and three of the phasor plot. This section is redrawn in Figure $9.3.4$. In reality, any two vectors can be used for the following proof, but this pair turns out to be particularly convenient in its orientation.

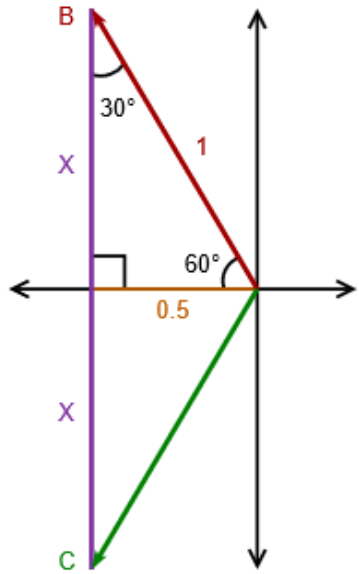

Figure 9.3.4: Solving for the line voltage of a Y-connected generator.

For ease of use we shall normalize the magnitude of the generator voltage to unity. What we see is that the B and C vectors are split perfectly by the horizontal axis; that which is above the axis is perfectly mirrored below it. In the upper portion we find a right triangle with a hypotenuse of unity (dark red). The angle it makes with the horizontal must be half of the angle between it and the C vector. That's half of 120 degrees, or 60 degrees. As the sum of the interior angles of a triangle must be 180 degrees, this means that the third angle must be 30 degrees. The horizontal leg of the triangle (dark yellow or maybe “spicy mustard”) can be determined because we know both the hypotenuse and the opposite angle.

$$\text{opposite} \ = \ \text{hypotenuse} \ \times \sin\theta$$

The sine of 30 degrees is exactly 0.5, therefore, the horizontal leg of the triangle must be 0.5 times the magnitude of unity, or 0.5. We can use the Pythagorean theorem to find the remaining vertical leg (purple).

$$\text{vertical} \ = \sqrt{\text{hypotenuse}^2 - \text{horizontal}^2}$$

$$\text{vertical} \ = \sqrt{1^2 - 0.5^2}$$

$$\text{vertical} \ = \sqrt{\frac{3}{4}}$$

$$\text{vertical} \ = \frac{1}{2}\sqrt{3}$$

The vertical leg is perfectly mirrored below the horizontal axis. Therefore, the span from B to C must be twice this value, or $\sqrt{3}$. As the voltage developed across each leg of the generator is referred to as the generator's phase voltage, we can state:

$$\text{The line voltage for a Y-connected generator is } \sqrt{3} \text{ times its phase voltage.} \tag{9.3.1}$$

For example, if the phase voltage of a Y-connected generator is 120 volts, the line voltage would be $\sqrt{3}$ times larger, or approximately 208 volts.

For a delta-connected generator, the same holds true for the phase and line currents, with the proof left as an exercise. That is,

$$\text{The line current for a delta-connected generator is } \sqrt{3} \text{ times its phase current.} \tag{9.3.2}$$

These same relationships hold for the loads as well as the sources, e.g., the current in a leg of a Y-connected load will be the same as the line current and its phase voltage will be $\sqrt{3}$ times smaller than the line voltage.

In summation: For delta configurations (generator or load), the phase voltage is equal to the line voltage while the line current is la

For homogenous systems, as the generator and load share the same configuration, the phase voltages and currents of the load must be identical to those of the generator. A useful memory aid is that the power dissipated in the system must equal the power generated.

Example 9.3.1

A three-phase delta-connected generator feeds a three-phase delta-connected load like the system shown in Figure 9.3.1. Assume the generator phase voltage is 120 VAC RMS. The load consists of three identical legs of 50 Ω each. Determine the line voltage, load phase voltage, generator phase current, line current, load phase current and the total power delivered to the load.

As this is a homogenous (delta-delta) system, the load phase voltage and current are the same as those of the generator. Therefore, the load phase voltage must also be 120 volts. Second, in a delta configuration, the line voltage equals the phase voltage, again 120 volts. The load phase current is found via Ohm's law and will be an RMS value because the voltage is RMS:

$$i_{phase} = \frac{v_{phase}}{Z_{load}}$$

$$i_{phase} = \frac{120V}{50\Omega}$$

$$i_{phase} = 2.4A$$

The generator's phase current must be the same because the generator and load have the same configuration. For delta configurations, the line current is $\sqrt{3}$ times larger than the phase current, thus,

$$i_{line} = \sqrt{3} \times i_{phase}$$

$$i_{line} = \sqrt{3} \times 2.4A$$

$$i_{line} \approx 4.157A$$

Finally, total power can be found with a straight application of power law as the load is purely resistive and we have RMS values. Remember, this is three times the power dissipated in one leg.

$$P_{total} = 3 \times {i_{phase}}^2 \times R$$

$$P_{total} = 3 \times (2.4A)^2 \times 50\Omega$$

$$P_{total} = 864W$$

This is equivalent to about 1.2 HP. We could have also computed the load phase power by using the squared phase voltage divided by the load resistance, or by multiplying the phase voltage by the phase current. As this is a purely resistive load, there is no phase angle, and thus no power factor with which to concern ourselves.

Example 9.3.2

A three-phase Y-connected generator feeds a three-phase Y-connected load similar to the system shown in Figure 9.3.2. Assume the generator phase voltage is 220 VAC RMS. The load consists of three identical legs of 100 Ω each. Determine the line voltage, load phase voltage, generator phase current, line current, load phase current and the total power delivered to the load.

This is a homogenous (Y-Y) system, therefore the load phase voltage and current are the same as those of the generator. Consequently, the load phase voltage must be 220 volts. In a Y configuration, the line voltage equals the phase voltage times $\sqrt{3}$.

$$v_{line} = \sqrt{3} \times v_{phase}$$

$$v_{line} = \sqrt{3} \times 220V$$

$$v_{line} \approx 381V$$

The load phase current is found via Ohm's law and will be an RMS value because the voltage is RMS. This is the same as the generator phase current and also the line current.

$$i_{phase} = \frac{v_{phase}}{Z_{load}}$$

$$i_{phase} = \frac{220V}{100\Omega}$$

$$i_{phase} = 2.2A$$

Total power can be found using basic power law as the load is purely resistive and we have RMS values. In this case we'll use current times voltage for a change of pace.

$$P_{total} = 3 \times i_{phase} \times v_{phase}$$

$$P_{total} = 3 \times 2.2A \times 220V$$

$$P_{total} = 1452W$$

This is just shy of 2 HP. Once again, this is a purely resistive load and there is no phase angle. Thus, the power factor is unity with the real and apparent powers being the same.

Example 9.3.3

For the the system shown in Figure 9.3.5, determine the total apparent and real power delivered to the load. Also find the line voltage. The phase voltage of the source is 240 volts RMS at 60 Hz.

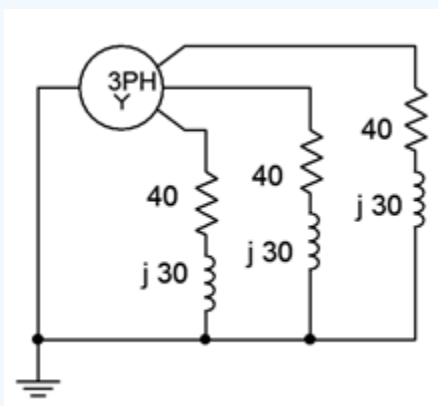

Figure 9.3.5: Circuit for Example 9.3.3.

Given the fact that the three load legs are all together at one common point (ground), this must be a Y-Y system. Consequently, we know that the line voltage must be $\sqrt{3}$ times the phase voltage of the generator.

$$v_{line} = \sqrt{3} \times v_{phase}$$

$$v_{line} = \sqrt{3} \times 240V$$

$$v_{line} \approx 416VRMS$$

This is a homogenous system (Y-Y) so we also know that the load voltage is equal to the generator voltage, or 240 volts RMS. From that we can find the load current (the line current must be the same value because this is a Y-connected load).

$$i_{phase} = \frac{v_{phase}}{Z_{load}}$$

$$i_{phase} = \frac{240V}{40 + j30\Omega}$$

$$i_{phase} = 4.8\angle -36.87^{\circ} A$$

The phase angle is appropriate for the 0° reference generator. The other two angles will be off of this by $\pm 120^{\circ}$. The apparent power is simply the product of the load current and voltage magnitudes.

$$S = 3 \times i_{load} \times v_{load}$$

$$S = 3 \times 4.8A \times 240V$$

$$S = 3456VA$$

The real power can be found a few different ways:

$$P = S \times \cos\theta$$

$$P = 3456VA \times \cos(-36.87^{\circ})$$

$$P = 2765W$$

$$P = 3 \times {i_{load}}^2 \times R_{load}$$

$$P = 3 \times 4.8A2 \times 40\Omega$$

$$P = 2765W$$

Computer Simulation

The circuit of Example $9.3.3$ is worthy of a simulation. The first thing to do is to determine an appropriate value of inductance to achieve a reactance of $j40\Omega$. Given the 60 Hz source frequency, this turns out to be approximately 80 mH. The circuit is constructed as shown in Figure $9.3.6$. The 240 volt RMS source phase voltage is equivalent to approximately 340 volts peak. The positions of the inductor and resistor in each leg have been swapped for a reason that will be apparent shortly.

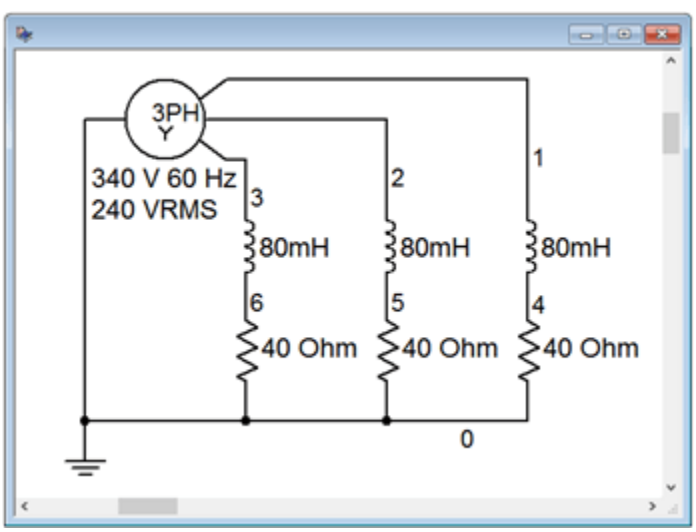

Figure $9.3.6$: The equivalent system of Figure $9.3.5$ in a simulator.

The immediate item of interest is to verify the time shifts and amplitudes of the phase voltages. These correspond to nodes 1, 2 and 3. In this configuration, the load phase voltage equals the generator phase voltage, thus they should be 340 volts peak and separated by 120 degrees or 1/3rd of a cycle.

A transient analysis is performed, plotting the node voltages of interest. The result is shown in Figure 9.3.7. The voltages are precisely as expected and the plot compares perfectly to the theoretical plot of Figure 9.2.4.

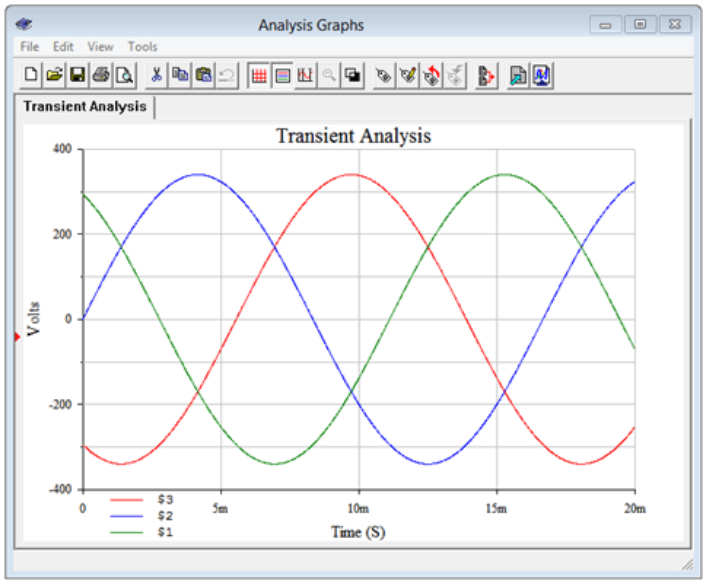

Figure 9.3.7: The three load voltages simulated from Figure 9.3.6.

Now we check the line voltage. This was calculated to be 416 volts RMS, or approximately 588 volts peak. The post processor is used to display the result of node voltage 1 minus node voltage 2. This is shown in Figure 9.3.8. Again, the results are as expected with a peak just under 600 volts.

Finally, we will investigate the true load power. Perhaps the easiest way to do this is to determine the voltage across the resistive portion of the load. From prior work we know that true power is only associated with resistance, not reactance. Thus, all we need to do is measure the peak voltage across the resistor. From there, we find its RMS equivalent, square it, and divide by the resistor value. This gives us the true load power in one leg. For the total power we simply triple the result. Obtaining the voltage across the resistor is easy if the resistor is attached to ground. In that case, it's just the voltage at the node to which the resistor is connected. This is why the inductor and resistor positions were swapped in the simulation. As they are in series, it makes no difference to the overall load impedance, however, the new arrangement allows us to obtain the resistor voltage directly instead of having to rely on a differential voltage obtained through the post processor.

Another transient analysis is performed, this time plotting the voltage across one of the load resistors; namely node 4. The result is shown in Figure 9.3.9. The peak of this waveform is measured to be 271.5 volts, or about 192 volts RMS. Squaring this and dividing by 40 Ω yields a little over 921 watts per leg, for a total of about 2765 watts, as expected.

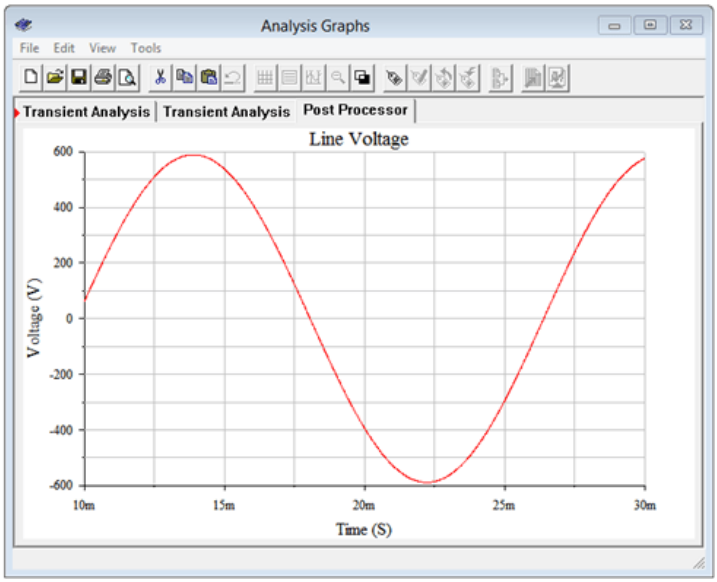

Figure 9.3.8: One of the line voltages simulated from Figure 9.3.6.

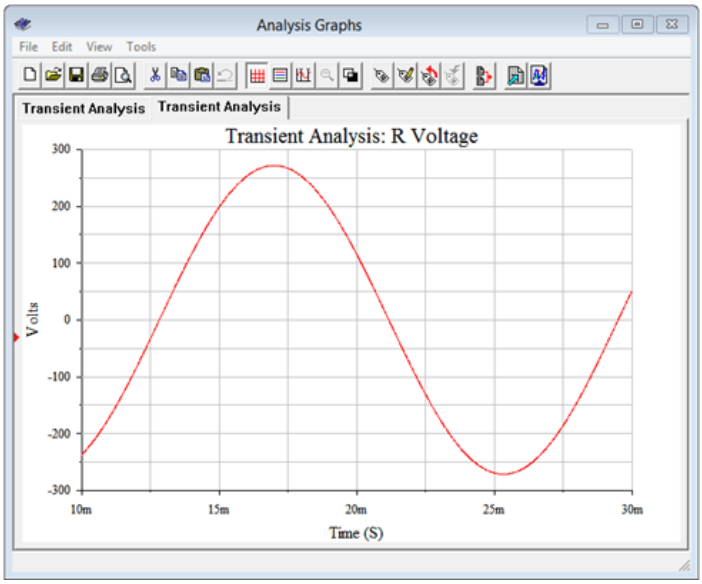

Figure 9.3.9: Simulated voltage across one of the load resistors in Figure 9.3.6.

Heterogeneous Systems

Systems configured as delta-to-Y and Y-to-delta appear to be a bit more complex than homogeneous systems. We shall refer to these as heterogeneous systems as the structures of the generator and load are of opposite kind. Examples are shown in Figures 9.3.10 and 9.3.11, respectively.

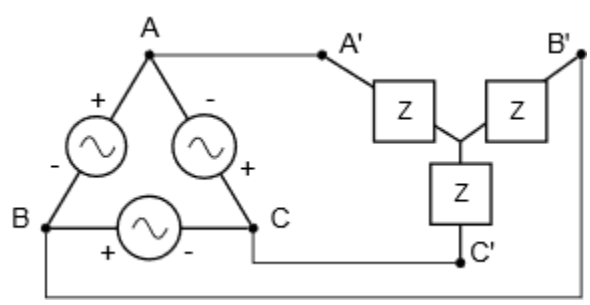

Figure 9.3.10: A delta-connected generator with a Y-connected load (delta-Y).

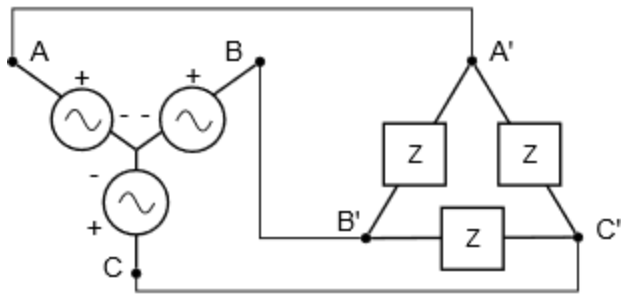

Figure $9.3.11$: A Y-connected generator with a delta-connected load (Ydelta).

These systems are not nearly so difficult as some people think; all you have to do is remember statements $9.3.1$ and $9.3.2$. Indeed, the summation is worth repeating here:

\text{For delta configurations (generator or load), the phase voltage is equal to the line voltage while the line current is larger than the phase current by } \sqrt{3} \text{. For Y configurations, the phase current is equal to the line current while the line voltage is } \sqrt{3} \text{ larger than the phase voltage.} \nonumber \]

You can think of analyzing these systems as a two-step process. First, determine the line voltage and current from either the generator or load; and second, transition from the line to the other side (load or generator). If confusion sets in, remember that power generated must equal power dissipated or delivered.

In Figure $9.3.10$, the line voltage equals the generator phase voltage. The load is Yconnected, so each leg sees the line voltage divided by $\sqrt{3}$. Based on this, each leg of the load current can be computed. Note that the line current equals the load current. The generator phase current will be the line current divided by $\sqrt{3}$.

In Figure $9.3.11$, the line voltage equals $\sqrt{3}$ times the generator phase voltage. The load is delta-connected, so each leg sees the line voltage. Knowing this, each leg of the load current can be computed. Also, the line current equals the generator phase current, and the load phase current will equal the line current divided by $\sqrt{3}$.

Example $9.3.4$

A delta-Y system like the one shown in Figure $9.3.10$ has a generator phase voltage of 230 volts RMS at 50 Hz. If the load is $200\angle 0^{\circ}\ \Omega$, determine the generator phase current, the line voltage, the load phase voltage, the load phase current and the total power delivered to the load.

The generator is delta connected so the line voltage equals the generator phase voltage, or 230 volts. The load, being Y-connected, will see a phase voltage that is reduced by a factor of $\sqrt{3}$.

$$v_{load} = \frac{v_{line}}{\sqrt{3}}$$

$$v_{load} = \frac{230V}{\sqrt{3}}$$

$$v_{load} \approx 132.8VRMS$$

We can use Ohm's law to determine the load phase current.

$$i_{load} = \frac{v_{phase}}{Z_{load}}$$

$$i_{load} = \frac{132.8V}{200\angle 0^{\circ}\Omega}$$

$$i_{load} \approx 0.664ARMS$$

Being Y-connected, the line current must be the same as the load phase current, or 0.664 amps. For delta connections, the line current is $\sqrt{3}$ times larger than the phase current, therefore the generator phase current must be $\sqrt{3}$ times smaller.

$$i_{gen} = \frac{i_{line}}{\sqrt{3}}$$

$$i_{gen} = \frac{0.664A}{\sqrt{3}}$$

$$i_{gen} \approx 0.383ARMS$$

The load is purely resistive and we have RMS values so the total power can be found via power law (apparent power equals true power in this case).

$$P_{total} = 3 \times {i_{load}}^2 \times R$$

$$P_{total} = 3 \times (0.664A)^2 \times 200\Omega$$

$$P_{total} = 264W$$

As a crosscheck, the power generated is:

$$P_{total} = 3 \times i_{gen} \times v_{gen}$$

$$P_{total} = 3 \times 0.383A \times 230V$$

$$P_{total} = 264W$$

Power generated equals power dissipated.

Example $9.3.5$

A Y-delta system like the one shown in Figure $9.3.11$ has a generator phase voltage of 100 volts RMS at 60 Hz. If the load has a magnitude of 50 Ω with a lagging power factor of 0.8, determine the generator phase current, the line voltage, the load phase voltage, the load phase current and the total true power delivered to the load.

The Y-connected generator creates a line voltage equal to the generator phase voltage times $\sqrt{3}$. This is also the load phase voltage as it is delta-connected.

$$v_{line} = \sqrt{3} \times v_{phase}$$

$$v_{line} = \sqrt{3} \times 100V$$

$$v_{line} \approx 173.2VRMS$$

The delta-connected load will see a phase voltage that is the same as the line voltage, or 173.2 volts. From this we can determine the load current.

$$i_{load} = \frac{v_{phase}}{Z_{load}}$$

$$i_{load} = \frac{173.2V}{50\Omega}$$

$$i_{load} \approx 3.464ARMS$$

As the load is delta-connected, the line current is the load current times $\sqrt{3}$. The generator phase current will be the same as the line current.

$$i_{line} = \sqrt{3} \times i_{phase}$$

$$i_{line} = \sqrt{3} \times 3.464A$$

$$i_{line} = 6ARMS$$

The true load power can be found several ways. First, we can use the i^2R form. To do this we need to find the resistive portion of the load. Recall that the power factor is equal to cosine θ. Therefore the impedance angle is:

$$\theta = \cos^{-1} PF$$

$$\theta = \cos^{-1} 0.8$$

$$\theta \approx 36.9^\circ$$

The real part is:

$$R = Z \cos\theta$$

$$R = 50\Omega \cos 36.9^\circ$$

$$R = 40\Omega$$

Alternately, we could've just multiplied Z by PF to obtain this. Continuing:

$$P_{total} = 3 \times {i_{load}}^2 \times R$$

$$P_{total} = 3 \times (3.464A)^2 \times 40\Omega$$

$$P_{total} = 1440W$$

We could also find the apparent power and use the power factor.

$$P_{total} = 3 \times v_{load} \times i_{load} PF$$

$$P_{total} = 3 \times 173.2V \times 3.464A \times 0.8$$

$$P_{total} = 1440W$$

As a crosscheck, compare the power dissipated to the power generated.

$$P_{total} = 3 \times v_{gen} \times i_{gen} \times PF$$

$$P_{total} = 3 \times 100V \times 6A \times 0.8$$

$$P_{total} = 1440W$$

This page titled 9.3: Three-Phase Connections is shared under a CC BY-NC-SA 4.0 license and was authored, remixed, and/or curated by James M. Fiore via source content that was edited to the style and standards of the LibreTexts platform.

9.4: Power Factor Correction

As we saw in earlier work, reactive loads demand higher currents than purely resistive loads for a given true load power. The ratio between apparent power, S, and true power, P, is the power factor, PF. Power factor may also be computed as the cosine of the load impedance angle. This situation remains for three-phase systems. If a balanced three-phase load has a large reactive component, the line current and generator phase current will be higher than necessary. The solution to this is power factor correction; the introduction of reactive elements that will counterbalance the reactive power of the load, essentially providing an opposing current such that the reactive currents cancel.

In three-phase systems the situation is potentially complicated by the fact that the load is split into three parts and can be either Y-connected or delta-connected.

The process for three phase is essentially the same as it is for single phase, but with a couple slight twists. The first course of action is to determine the reactive power, Q, of the load. As we are dealing with balanced loads, it is usually easiest to just concentrate on a single leg. There are two basic possibilities. First, if the load reactance is known, it is a simple matter to determine the reactive power by finding the load phase current, squaring it, and then multiplying by the load reactance. In contrast, if the load is described in terms of a power factor, the apparent power can be computed from the generator phase voltage and current, and then the power factor can be used to find the reactive power (e.g., finding true power and then using the Pythagorean theorem). Once the reactive power is known, the required reactance can be found using power law and either the phase voltage or current. Finally, the reactance value is used to determine the component value. As many loads are inductive, the compensating component usually will be capacitive. There will three units, one for each leg of the load.

For practical purposes, the compensating device is placed across the load terminals rather than in series with it. This is true whether the load is Y-connected or delta-connected. In other words, the compensating devices always will be placed in a delta configuration. This is true even if the load is Y-connected. We shall look at both situations in the next two examples.

Example $9.4.1$

The Y-delta system shown in Figure $9.4.1$ has a generator phase voltage of 120 volts RMS at 60 Hz. Determine the power factor, the generator phase current, and the total real and apparent power delivered to the load. Also determine components to correct the power factor and the new generator phase current.

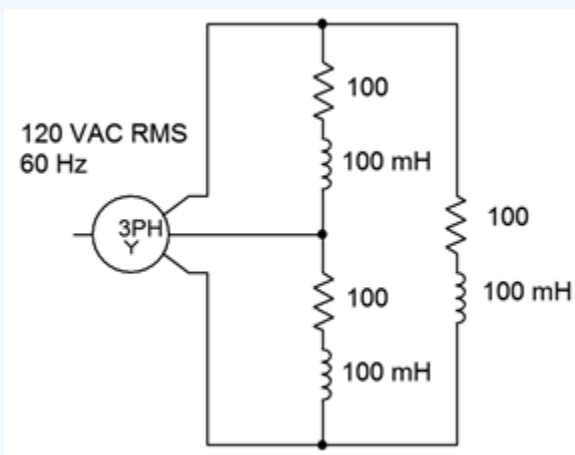

Figure $9.4.1$: Circuit for Example $9.4.1$.

First, the power factor is the cosine of the impedance angle. At 60 Hz, the reactance of the 100 mH inductor is $-j37.7\Omega$. This is in series with the resistance for a load impedance of $100 - j37.7\Omega$ or $106.9\angle 20.66^\circ$ per leg. The cosine of this angle is 0.9357.

The voltage across each leg of the load will equal the line voltage.

$$v_{line} = \sqrt{3} \times v_{phase}$$

$$v_{line} = \sqrt{3} \times 120V$$

$$v_{line} \approx 207.8VRMS$$

This will produce a load phase current magnitude of:

$$i_{load} = \frac{v_{phase}}{Z_{load}}$$

$$i_{load} = \frac{207.8V}{106.9\Omega}$$

$$i_{load} \approx 1.944ARMS$$

Now we can find the load powers.

$$S = 3 \times v_{phase} \times i_{phase}$$

$$S = 3 \times 207.8V \times 1.944A$$

$$S \approx 1212VA$$

$$P = S \times PF$$

$$P = 1212VA \times 0.9357$$

$$P \approx 1134W$$

$$Q = S \sin\theta$$

$$Q = 1212VA \sin 20.66^\circ$$

$$Q \approx 427.6VAR$$

The load is inductive so the compensation components need to be capacitors. Each capacitor needs to create 427.6/3 VAR, or 142.5 VAR. The required reactance is:

$$X_C = -j\frac{{v_{phase}}^2}{Q}$$

$$X_C = -j\frac{(207.8V)^2}{142.5VAR}$$

$$X_C \approx -j303\Omega$$

And finally, the capacitance value:

$$C = \frac{1}{2\pi f X_C}$$

$$C = \frac{1}{2\pi 60Hz303\Omega}$$

$$C \approx 8.75\mu F$$

These capacitors would be placed directly in parallel with each leg of the load and should result in a reduction of the generator and line currents.

Computer Simulation

To see the effect of power factor correction, the circuit used in Example $9.4.1$ is captured in a simulator, as illustrated in Figure

9.4.2. The goal here is to show the reduction in supplied current. To facilitate this, the normal Y-connected three-phase source is not used. Instead, three individual sine sources are used, each with a proper phase shift. A small 1 Ω sensing resistor is inserted in series with one of the sources. The voltage across this resistor is easily measured (node 7) and serves as a proxy for the generator phase current. Compared to the sizes of the other components, this extra resistance will have minimal impact on overall circuit behavior, perhaps shifting current values around 1% or so. Reducing the resistance to 0.1 Ω will reduce errors to negligible levels, but 1 Ω is convenient as no scaling is needed and will be sufficient to show the effect of power factor correction on source current.

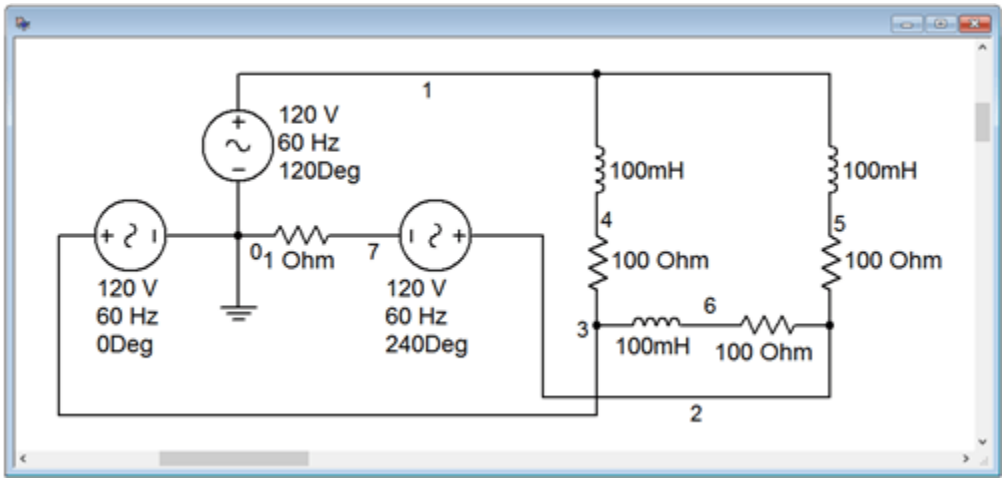

Figure 9.4.2: Circuit of Figure 9.4.1 in a simulator.

A transient simulation is run on the circuit, plotting the voltage at node 7. This is shown in Figure 9.4.3. Due to the 1 Ω sensing resistance, the voltage value is the same as the current value in amps. The peak value of the current is approximately 4.7 amps. This agrees with the calculated value of 4.76 amps (1.944 amps RMS times $\sqrt{2}$ times $\sqrt{3}$). Now that a baseline for the current has been established, we turn our attention to the modified version of the circuit with power factor correction.

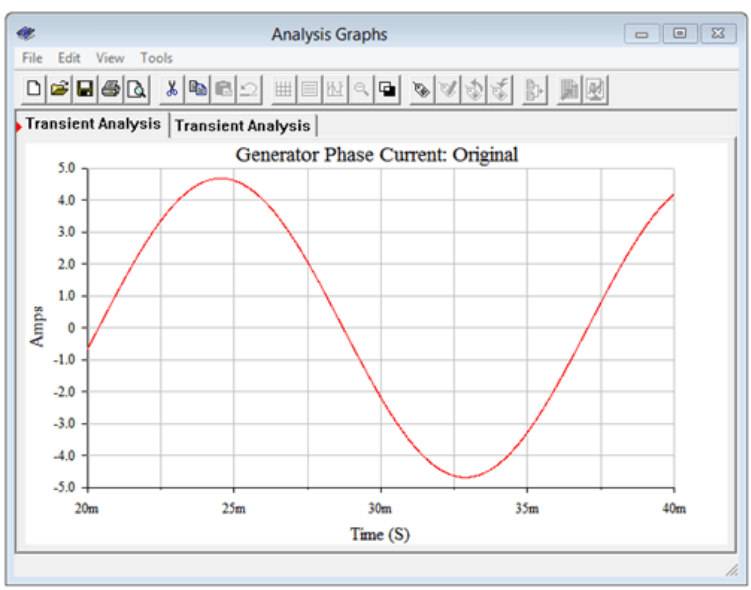

Figure 9.4.3: Generator phase current for the original circuit of Figure 9.4.2.

The three power factor correction capacitors are added in parallel with the existing load legs (i.e., from line to line). This is illustrated in Figure 9.4.4.

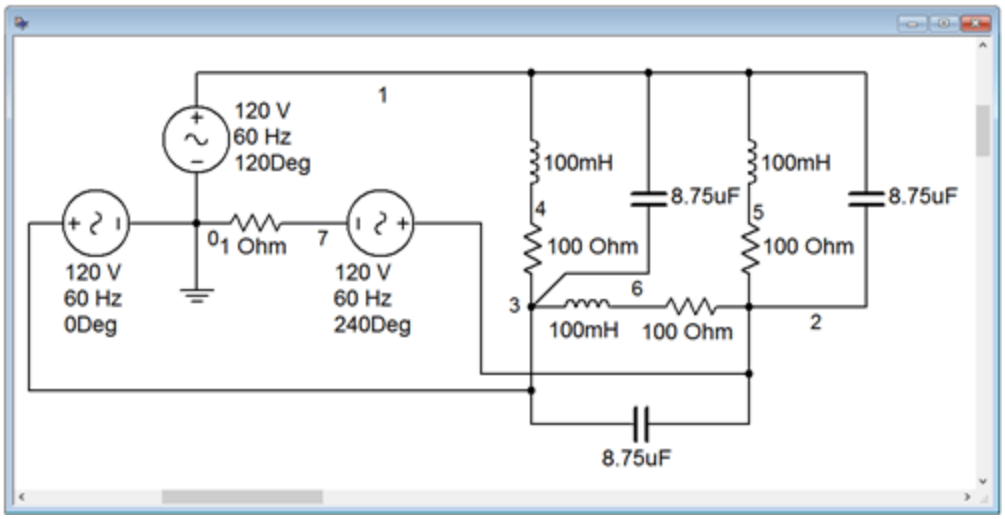

Figure 9.4.4: Power factor corrected circuit of Figure 9.4.1 in a simulator.

The transient simulation is repeated. The results are shown in Figure 9.4.5. The peak current in this version of the circuit is approximately 4.4 amps. Theoretically, the current should be scaled by the power factor, or 0.9357. As previously calculated, the value of the original generator phase current is 4.76 amps peak. Multiplying that by the power factor yields approximately 4.45 amps peak. The small deviation between this result and the simulation is due to the effect of the 1 Ω sensing resistor.

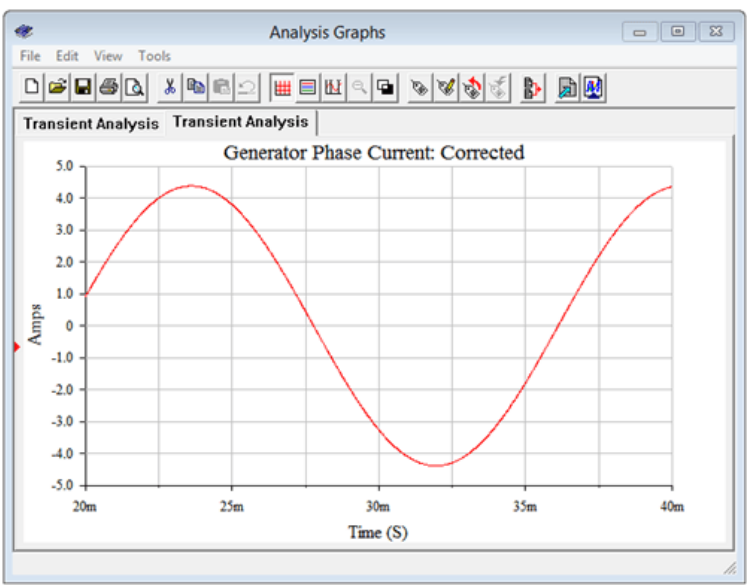

Figure 9.4.5: Generator phase current for the power factor corrected circuit of Figure 9.4.4.

Example 9.4.2

The Y-Y system shown in Figure 9.4.6 has a generator phase voltage of 230 volts RMS at 50 Hz. The load draws 900 VA with a power factor of 0.85 lagging. Determine the generator phase current. Also determine components to correct the power factor and the new generator phase current once the system is corrected.

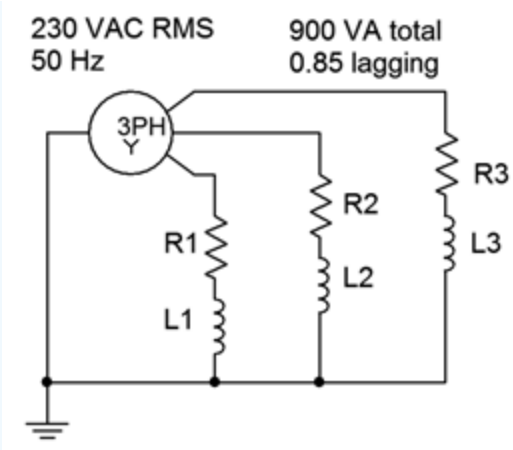

Figure 9.4.6: Circuit for Example 9.4.2.

We're looking for the generator phase current so let's break this down to a single leg, first. The total apparent power, S, is 900 VA. For a single leg that's 300 VA. This is a Y-Y system so the generator phase current and voltage are the same as the load phase current and voltage. The current can be found via the apparent power.

$$i = \frac{S}{v}$$

$$i = \frac{300VA}{230VRMS}$$

$$i \approx 1.304ARMS$$

Given a power factor of 0.85, we can determine the real and reactive powers.

$$P = S \times PF$$

$$P = 300VA \times 0.85$$

$$P = 255W$$

$$Q = \sqrt{S^2 - P^2}$$

$$Q = \sqrt{(300VA)^2 - (255W)^2}$$

$$Q \approx 158 \text{ VAR inductive}$$

For power factor correction, we need 158 VAR capacitive per leg to counteract this. These capacitors will be placed across the load terminals in a delta configuration. As such, they will see the line voltage. For a Yconnected generator, the line voltage is the phase voltage times $\sqrt{3}$. The result here is 230 volts times $\sqrt{3}$, or 398.4 volts RMS. From this we may determine the required reactance.

$$X_C = -j\frac{{v_{phase}}^2}{Q}$$

$$X_C = -j\frac{(398.4V)^2}{158VAR}$$

$$X_C \approx -j1004.6\Omega$$

The corresponding capacitance value is:

$$C = \frac{1}{2\pi f X_C}$$

$$C = \frac{1}{2\pi 50Hz1004.6\Omega}$$

$$C \approx 3.17\mu F$$

Computer Simulation

In Example $9.4.2$ we computed the generator phase current to be 1.304 amps RMS, which is equivalent to 1.844 amps peak. If the corrected circuit is proper, then the apparent power should fall to the real power, or 255 watts. The resulting generator phase current should be this power divided by the generator phase voltage, 255/230, or 1.109 amps RMS. This is equivalent to 1.568 amps peak. (Alternately, we could multiply the original current by the power factor because the voltage is constant.)

To verify the effectiveness of the circuit modification, we start by capturing the circuit in a simulator, as shown in Figure $9.4.7$.

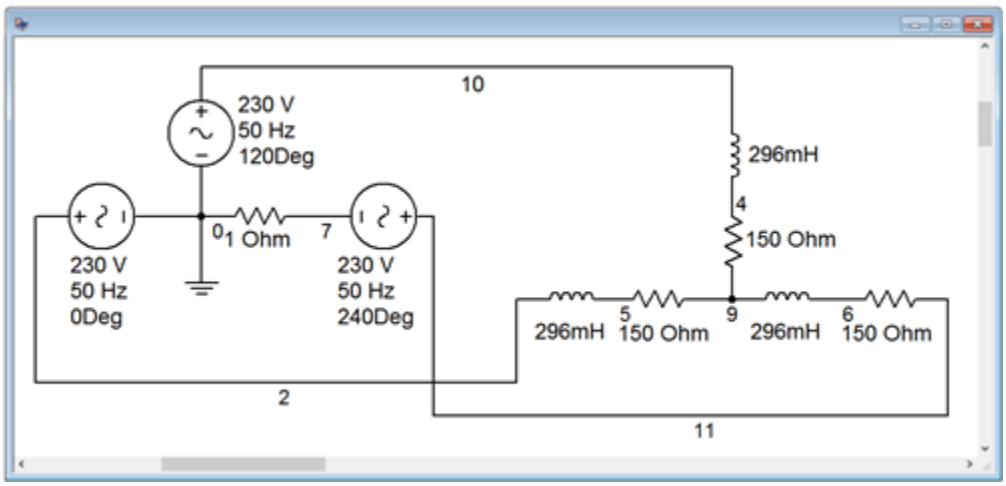

Figure $9.4.7$: Generator phase current for the original circuit of Figure $9.4.6$.

As in the prior example, the source is built from three discrete sine generators at appropriate phases. Beneath one of them, a 1 Ω current sensing resistor is added (node 7). This value should produce no more than about 1% deviation as it is a full two orders of magnitude smaller than the other circuit resistances.

An interesting question for the sharp-eyed observer is how the load resistor and inductor values were obtained. This turns out to be not so difficult. We have already computed the true and reactive powers for each leg. We also know the load phase voltage (it's the same as the generator, 230 volts, as it's a Y-Y connection). Therefore, we can find the R and X_L values as we have already computed the load current and can use this to determine the load impedance, Z. The power factor is known, and from this the real and reactive parts can be deduced.

$$Z = \frac{v_{phase}}{i}$$

$$Z = \frac{230V}{1.304A}$$

$$Z \approx 176\Omega$$

This is the magnitude. For the sake of completeness, the angle is the arccosine of the power factor, or $\cos^{-1}(0.85)$, which is 31.8 degrees. The fastest way to determine R is to recognize that the real portion is the impedance magnitude times the power factor:

$$R = Z \times PF$$

$$R = 176\Omega \times 0.85$$

$$R \approx 150\Omega$$

The reactive portion can be found via the Pythagorean theorem or by using the power relation. Then we apply the reactance

formula to find the inductance.

$$X_L = \frac{Q}{i^2}$$

$$X_L = \frac{158VAR}{(1.304ARMS)^2}$$

$$X_L \approx 92.9\Omega$$

$$L = \frac{X_L}{2\pi f}$$

$$L = \frac{92.9\Omega}{2\pi 50Hz}$$

$$L \approx 296mH$$

The result of a transient analysis is shown in Figure $9.4.8$. The measured peak phase current is 1.837 amps. This compares nicely with the expected value of 1.844 amps.

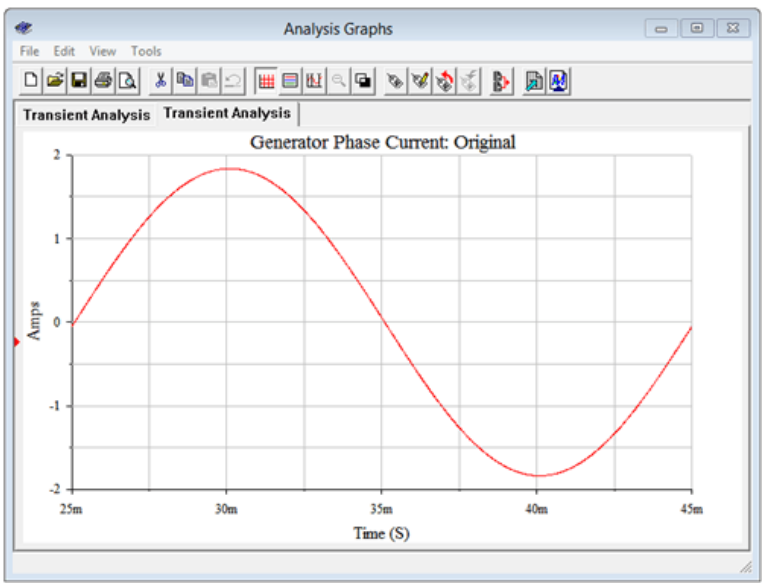

Figure $9.4.8$: Generator phase current for the original circuit of Figure $9.4.7$.

For the comparison, the power factor correction capacitors are added in a delta configuration (across the lines) as shown in Figure $9.4.9$.

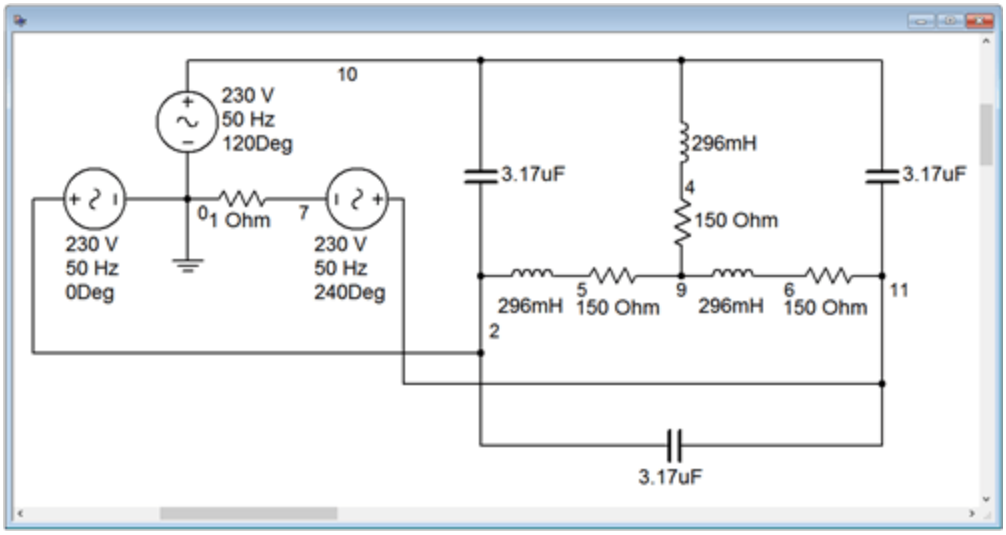

Figure 9.4.9: Power factor corrected circuit of Figure 9.4.6 in a simulator.

Another simulation is run, the result shown in Figure 9.4.10. The peak current has decreased to 1.56 amps. This is just slightly lower than the expected value of 1.568 amps peak. Again, this small deviation is due to the effect of the sense resistor.

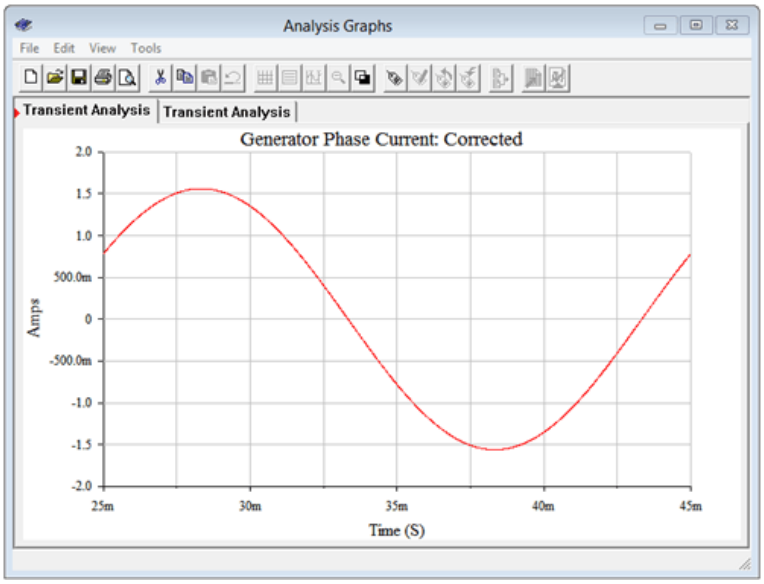

Figure 9.4.10: Generator phase current for the power factor corrected circuit of Figure 9.4.9.

This page titled 9.4: Power Factor Correction is shared under a CC BY-NC-SA 4.0 license and was authored, remixed, and/or curated by James M. Fiore via source content that was edited to the style and standards of the LibreTexts platform.

9.5: Summary

Polyphase systems can be thought of as a group of individual sources of the same magnitude that are synced together and where the load is similarly divided into sections or legs. By spreading out the source currents across the waveform's period, a smooth application of power to the load can be achieved. Also, for the same line current, more power can be delivered to the load than that of a single phase system. Loads can be balanced or unbalanced. A balanced load means that all legs of the load exhibit an identical impedance. Thus, the currents coming out of the source will be the same except for the phase shifts spreading them across a single period. While any number of phases is possible, three-phase systems are popular as they deliver the benefits of polyphase while limiting complexity.

A three-phase source produces currents that are 120 degrees apart. That is, if the first signal is taken as the reference, or 0°, then the other two are at 120° and 240°. Both the source and the load can be configured in one of two ways: delta or Y. This makes four possible combinations for the source-load connection; namely Y-Y, delta-delta, Y-delta, and delta-Y. In a Y-Y connection the source phase current and load current will be the same. The voltage from one line to another will be $\sqrt{3}$ times larger than the phase voltage. In a delta-delta connection the phase and line voltages will be the same, but the line current will be $\sqrt{3}$ times larger than the phase current of the generator or load. In delta-Y and Y-delta connections, the source and load no longer match configuration so neither the phase voltages nor currents are the same. For the portion that is Y-connected, the line current and phase current will be the same. For the portion that is delta-connected, the line voltage and phase voltage will be the same. For those configurations, the other parameter (voltage or current) will be scaled by $\sqrt{3}$.

In a system with a balanced load, the system power will simply be three times the power of one leg. If the load has a non-negligible phase angle, power factor correction can be used to reduce the required line current. The compensating items are arranged in a delta configuration, even if the load is Y-connected.

Review Questions

1. Describe the advantages and disadvantages of polyphase versus single phase systems.

2. Define the terms delta-connected and Y-connected.

3. How are line and load voltages related for Y-connected loads?

4. How are line and load currents related for Y-connected loads?

5. How are line and load voltages related for delta-connected loads?

6. How are line and load currents related for delta-connected loads?

7. Describe a practical connection for power factor correction of a Y-connected load.

This page titled 9.5: Summary is shared under a CC BY-NC-SA 4.0 license and was authored, remixed, and/or curated by James M. Fiore via source content that was edited to the style and standards of the LibreTexts platform.

9.6: Exercises

Unless specified otherwise, assume generator frequencies are 60 Hz for all problems.

Analysis

1. As depicted in Figure $9.6.1$, a three-phase delta-connected generator feeds a delta-connected load. The generator phase voltage is 120 volts and the load consists of three legs of 10 Ω each. Find the voltage across each load leg, the line current through the wires connecting the load to to the generator and the power drawn by the load.

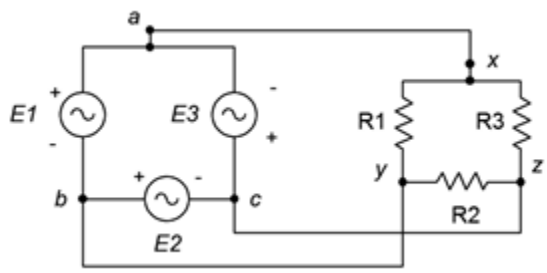

Figure $9.6.1$

2. Referring to the delta-delta system of Figure $9.6.1$, if the generator phase voltage is 230 volts and the load is balanced with each leg at 2 Ω, determine the line voltage, line current, generator phase current and load current.

3. The system of Figure $9.6.2$ shows a three-phase Y-connected generator feeding a Y-connected load. If the generator phase voltage is 120 volts and the load consists of three legs of 20 Ω each, find the line voltage, the line current, voltage across each load leg and the total power drawn by the load.

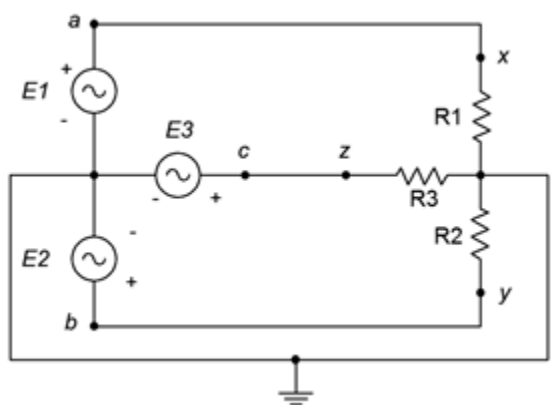

Figure $9.6.2$

4. Referring to Figure $9.6.2$, if the generator phase voltage is 230 volts and the load is balanced with each leg at 12 Ω, determine the line voltage, line current, generator phase current, load current, load voltage and total load power.

5. As depicted in Figure $9.6.3$, a three-phase delta-connected generator feeds a Y-connected load. The generator phase voltage is 120 volts and the load consists of balanced legs of 5 Ω each. Find the voltage across each load leg, the line current, the line voltage, the generator phase current and the total load power.

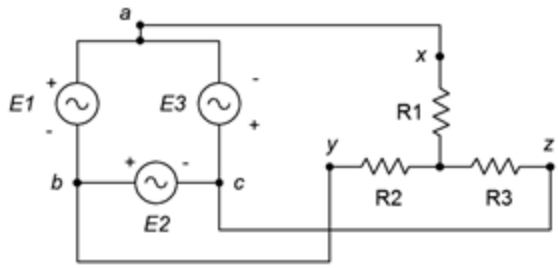

Figure $9.6.3$

6. Referring to Figure $9.6.3$, if the generator phase voltage is 400 volts and the load is balanced with each leg at 10 Ω, determine the line voltage, line current, generator phase current, load current and the voltage across each load leg.

7. The system of Figure $9.6.4$ shows a three-phase Y-connected generator feeding a delta-connected load. If the generator phase voltage is 120 volts and the load consists of three legs of 60 Ω each, find the line voltage, the line current, voltage across each load leg and the total power drawn by the load.

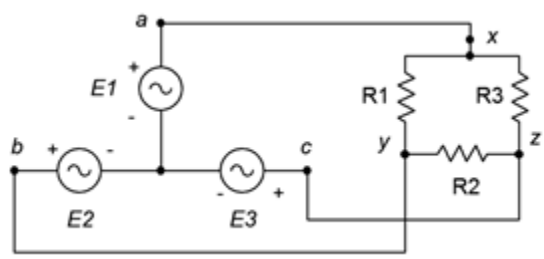

Figure $9.6.4$

8. Referring to the Y-delta system of Figure $9.6.3$, if the generator phase voltage is 120 volts and the load is balanced with each leg at 20 Ω, determine the line voltage, line current, generator phase current, load current, the voltage across each load leg and the total load power.

9. A three-phase delta-connected generator feeds a delta-connected load consisting of three legs of 10 Ω in series with $j4$ Ω of inductive reactance, as shown in Figure $9.6.5$. If the line voltage is 208 volts, find the voltage across each load leg, the current through the wires connecting the load to to the generator, and the apparent and real powers drawn by the load.

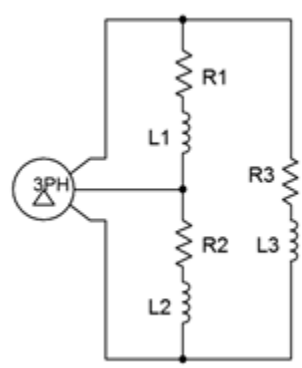

Figure $9.6.5$

10. Given the delta-delta system of Figure $9.6.5$, if the generator phase voltage is 120 volts and the load is balanced with each leg at $20 + j10$ Ω, determine the line voltage, line current, generator phase current, load current, the voltage across each load leg, and the total real and apparent load powers.

11. A three-phase Y-connected generator feeds a Y-connected load consisting of three legs of 10 Ω in series with $j4\ \Omega$ of inductive reactance, as shown in Figure $9.6.6$. If the line voltage is 208 volts, find the voltage across each load leg, the line current, and the apparent and real powers drawn by the load.

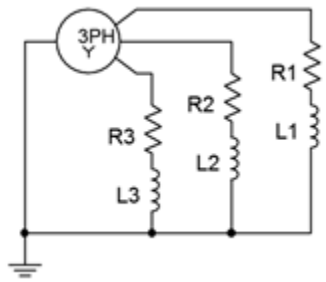

Figure $9.6.6$

12. Given the Y-Y system of Figure $9.6.6$, if the line voltage is 400 volts and the load is balanced with each leg at $100 + j20\ \Omega$, determine the generator phase voltage, line current, generator phase current, load current, the voltage across each load leg, and the total real and apparent load powers.

13. The three-phase system of Figure 9.3.3 uses a Y-connected generator feeding a delta-connected load. The load consists of three legs of 40 Ω in series with $j30\ \Omega$ of inductive reactance, as shown in Figure 9.32. If the generator phase voltage is 230 volts, find the line voltage, the voltage across each load leg, the line current, the load current, and the apparent and real powers drawn by the load.

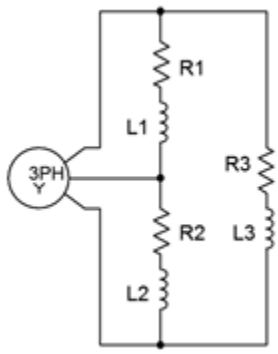

Figure $9.6.7$

14. Given the Y-delta system of Figure $9.6.7$, if the line voltage is 400 volts and the load is balanced with each leg at $80 + j20\ \Omega$, determine the generator phase voltage, line current, generator phase current, load current, the voltage across each load leg, and the total real and apparent load powers.

15. A 208 three-phase delta-connected generator feeds a Y-connected load consisting of three legs of 10 Ω in series with $j4\ \Omega$ of inductive reactance as shown in Figure $9.6.8$. Find the voltage across each load leg, the current through the wires connecting the load to to the generator, and the apparent and real powers drawn by the load.

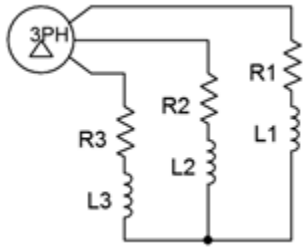

Figure $9.6.8$

16. Given the delta-Y system of Figure $9.6.8$, if the line voltage is 400 volts and the load is balanced with each leg at $120 + j30\ \Omega$, determine the line current, generator phase current, load current, the voltage across each load leg, and the total real and apparent load powers.

17. A 120 volt three-phase delta-connected generator feeds a delta-connected load consisting of three legs of 75 Ω in series with $-j10\ \Omega$ of capacitive reactance as shown in Figure $9.6.9$. Find the voltage across each load leg, the current through the wires connecting the load to to the generator, and the apparent and real powers drawn by the load.

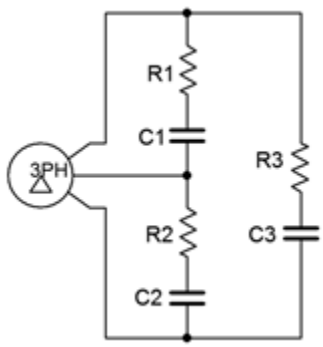

Figure $9.6.9$

18. A three-phase Y-connected generator feeds a Y-connected load consisting of three legs of 150 Ω in series with $-j20\ \Omega$ of capacitive reactance as shown in Figure $9.6.10$. If the generator phase voltage is 120 volts, find the line voltage, the voltage across each load leg, the line current, and the apparent and real powers drawn by the load.

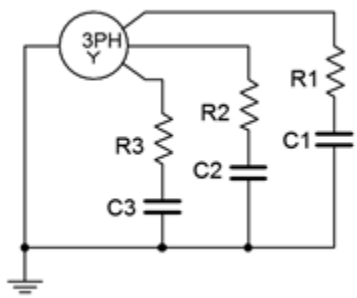

Figure $9.6.10$

Design

19. Using the delta-delta system of problem 9 and assuming the source frequency is 60 Hz, determine appropriate component values to place in parallel with each load leg in order to shift the power factor to unity.

20. Using the Y-Y system of problem 11 and assuming the source frequency is 60 Hz, determine appropriate component values to place in parallel with each load leg in order to shift the power factor to unity.

Challenge

21. Using the Y-Y system of problem 11 and assuming the source frequency is 60 Hz, determine appropriate component values to be added to the load in order to shift the power factor to unity. These new components should be in a delta configuration.

Simulation

22. Use a transient analysis to verify the phase and line voltage phase relationships in problem 1.

23. Use a transient analysis to verify the results computed for problem 15.

24. Use a transient analysis to verify the design solution to problem 19. This can be achieved by ensuring that the voltage and current in each load leg (with added correction components) are in phase.

25. Use a transient analysis to verify the design solution to problem 20. This can be achieved by ensuring that the voltage and current in each load leg (with added correction components) are in phase.

This page titled 9.6: Exercises is shared under a CC BY-NC-SA 4.0 license and was authored, remixed, and/or curated by James M. Fiore via source content that was edited to the style and standards of the LibreTexts platform.

10: DECIBELS AND BODE PLOTS

Learning Objectives

After completing this chapter, you should be able to:

- Convert between ordinary and decibel based power and voltage gains.
- Utilize decibel-based voltage and power measurements during circuit analysis.
- Define and graph a general Bode plot.
- Detail the differences between lead and lag networks, and graph Bode plots for each.
- Combine the effects of several lead and lag networks together in order to determine a system Bode plot.

10.1: Introduction

10.2: The Decibel

10.3: Bode Plots

10.4: Combining the Elements - Multi-Stage Effects

10.5: Summary

10.6: Exercises

This page titled 10: Decibels and Bode Plots is shared under a CC BY-NC-SA 4.0 license and was authored, remixed, and/or curated by James M. Fiore via source content that was edited to the style and standards of the LibreTexts platform.

10.1: Introduction

This chapter introduced two related items; the decibel and Bode plots. The decibel measurement scheme is in wide use, particularly in the fields of audio and communications. We will be examining its advantages over the ordinary system of measurement used up to now and how to convert values of one form into the other. One of the more important parameters of a circuit is its frequency response, that is, the way in which the circuit responds to input signals over a range of frequencies. While we have investigated this to some extent in prior work, in this chapter we shall take it to its logical conclusion, namely the Bode plot. A Bode plot is, in fact, a pair of plots; one of relative signal magnitude or gain with respect to frequency and a second detailing the phase response with respect to frequency. Bode plots are of particular importance in the study of circuits such as amplifiers and filters, as well as in systems that make use of negative feedback. The gain magnitude plot makes use of a decibel scale and thus it makes sense to begin our study looking at the decibel system: specifically how it is defined and its practical use.

This page titled 10.1: Introduction is shared under a CC BY-NC-SA 4.0 license and was authored, remixed, and/or curated by James M. Fiore via source content that was edited to the style and standards of the LibreTexts platform.

10.2: The Decibel

Most people are familiar with the term “decibel” in reference to sound pressure. It’s not uncommon to hear someone say something such as “It was 110 decibels at the concert last night and my ears are still ringing.” This popular use is somewhat inaccurate, but does show that decibels indicate some sort of quantity or relative level; in this case, sound pressure level.

Decibel Representation of Power and Voltage Gains

In its simplest form, the decibel is used to measure system gain, such as power or voltage gain, where gain is simply the ratio of an output signal to an input signal. For an amplifying circuit, the gain would be greater than one, but for purely passive systems it will likely be fractional (i.e., the output quantity is smaller than the input quantity). For example, a simple voltage divider might be said to have a “gain” of 0.2, or some such, meaning that the output signal is only 20% of the input signal. Unlike the ordinary gain measurements, the decibel form is logarithmic. Because of this, it can be very useful for showing ratios of change, as well as absolute change. The base unit is the Bel, named after Alexander Graham Bell, the noted American scientist and inventor. To convert an ordinary gain to its Bel counterpart, just take the common log (base 10) of the gain. In equation form:

$$\text{Bel gain } = \log_{10}(\text{ ordinary gain }) \tag{10.2.1}$$

Note that on most hand calculators common log is denoted as “$\log$” while the natural log is given as “$\ln$”. Unfortunately, some programming languages use “$\log$” to indicate natural log and “$\log 10$” for common log. More than one student has been bitten by this bug, so be forewarned! As an example, if an amplifier circuit produces an output power of 200 milliwatts for an input of 10 milliwatts, we would normally say that it has a power gain of:

$$G = \frac{P_{out}}{P_{in}}$$

$$G = \frac{200mW}{10mW}$$

$$G = 20$$

For the Bel version, just take the log of this result.

$$G' = \log_{10} G$$

$$G' = \log_{10} 20$$

$$G' = 1.301$$

The Bel gain is 1.3 Bels. The term “Bels” is not a unit in the strict sense of the word (as in “watts”), but is simply used to indicate that this is not an ordinary gain. In contrast, ordinary power and voltage gains are sometimes given units of W/W and V/V to distinguish them from Bel gains. Also, note that the symbol for Bel power gain is G' and not G. All Bel gains are denoted with the following prime ($'$) notation to avoid confusion. Because Bels tend to be rather large, we typically use one-tenth of a Bel as the norm. The result is the decibel (one-tenth Bel). To convert to decibels, simply multiply the number of Bels by 10. Our gain of 1.3 Bels is equivalent to 13 decibels. The units are commonly shortened to dB. Consequently, we may say:

$$G' = 10 \log_{10} G \tag{10.2.2}$$

Where the result is in dB.

At this point, you may be wondering what the big advantage of the decibel system is. To answer this, recall a few log identities. Normal multiplication becomes addition in the log system, and division becomes subtraction. Likewise, powers and roots become multiplication and division. Because of this, two important things show up. First, ratios of change become constant offsets in the decibel system, and second, the entire range of values diminishes in size. The result is that a very wide range of gains may be represented within a fairly small scope of values, and the corresponding calculations can become quicker.

There are a couple of dB values that are useful to remember, and are illustrated in Table $10.2.1$. With the aid of your calculator, it is very easy to show the following:

Factor	dB Value using $G' = 10\log_{10} G$
1	0 dB
2	3.01 dB
4	6.02 dB
8	9.03 dB
10	10 dB

Table $10.2.1$: Positive dB factors.

We can also look at fractional factors (i.e., losses instead of gains, Table $10.2.2$):

Factor	dB Value
0.5	-3.01 dB
0.25	-6.02 dB
0.125	-9.03 dB
0.1	-10 dB

Table $10.2.2$: Negative dB factors.

If you look carefully, you will notice that a doubling is represented by an increase of approximately 3 dB. A factor of 4 is in essence, two doublings. Therefore, it is equivalent to 3 dB + 3 dB, or 6 dB. Remember, because we are using logs, multiplication turns into simple addition. In a similar manner, a halving is represented by approximately –3 dB. The negative sign indicates a reduction. To simplify things a bit, think of factors of 2 as $\pm$3 dB, the sign indicating whether you are increasing (multiplying), or decreasing (dividing). As you can see, factors of 10 work out to a very convenient 10 dB. By remembering these two factors, you can often estimate a dB conversion without the use of your calculator. For instance, we could rework our initial conversion problem as follows:

- The amplifier has a gain of 20.
- 20 can be written as 2 times 10.
- The factor of 2 is 3 dB, the factor of 10 is 10 dB.
- The answer must be 3 dB + 10 dB, or 13 dB.

Time for a few examples.

Example $10.2.1$

An amplifier has a power gain of 800. What is the decibel power gain?

$$G' = 10\log_{10} G$$

$$G' = 10\log_{10} 800$$

$$G' = 10 \times 2.903$$

$$G' = 29.03dB$$

We could also use our estimation technique:

- $G = 800 = 8 \cdot 10^2$
- 8 is equivalent to 3 factors of 2, or $2 \cdot 2 \cdot 2$, and can be expressed as 3 dB + 3 dB + 3 dB, which is, of course, 9 dB
- 10^2 is equivalent to 2 factors of 10, or 10 dB + 10 dB = 20 dB. Alternately, the power of 2 literally represents 2 Bels, and thus 20 dB.

- The result is 9 dB + 20 dB, or 29 dB

Note that if the leading digit is not a power of 2, the estimation will not be as precise. For example, if the gain is 850, you know that the decibel gain is just a bit over 29 dB. You also know that it must be less than 30 dB ($1000 = 10^3$ which is 3 factors of 10, or 30 dB.) As you can see, by using the dB form, you tend to concentrate on the magnitude of gain, and not so much on trailing digits.

Example 10.2.2

An attenuator reduces signal power by a factor of 10,000. What is this loss expressed in dB?

$$G' = 10\log_{10}\frac{1}{10,000}$$

$$G' = 10 \times (-4)$$

$$G' = -40dB$$

By using the approximation, we can say,

$$\frac{1}{10,000} = 10^{-4}$$

The negative exponent tells us we have a loss (negative dB value), and 4 factors of 10 (i.e., 4 Bels).

$$G' = -10dB - 10dB - 10dB - 10dB$$

$$G' = -40dB$$

Remember, if an increase in signal is produced, the result will be a positive dB value. A decrease in signal will always result in a negative dB value. A signal that is unchanged indicates a gain of unity, or 0 dB.

To convert from dB to ordinary form, just invert the steps; that is, divide by ten and then take the antilog.

$$G = \log_{10}^{-1}\frac{G'}{10} \tag{10.2.3}$$

On most hand calculators, base 10 antilog is denoted as 10^x. In most computer languages, you just raise 10 to the appropriate power, as in G = 10.0** (Gprime / 10.0) (Python), or use an exponent function, as in pow(10.0, Gprime / 10.0) (C).

Example 10.2.3

An amplifier has a power gain of 23 dB. If the input is 1 mW, what is the output?

In order find the output power, we need to find the ordinary power gain, G.

$$G = \log_{10}^{-1}\frac{G'}{10}$$

$$G = \log_{10}^{-1}\frac{23}{10}$$

$$G = 199.5$$

Therefore, $P_{out} = 199.5 \cdot 1$ mW, or 199.5 mW \nonumber \]

You could also use the approximation technique in reverse. To do this, break up the dB gain in 10 dB and 3 dB chunks:

$$23dB = 3dB + 10dB + 10dB$$

Now replace each chunk with the appropriate factor, and multiply them together (remember, when going from log to ordinary form, addition turns into multiplication.)

$$3dB = 2X, 10dB = 10X, \text{ so,}$$

$$G = 2 \times 10 \times 10$$

$$G = 200$$

While the approximation technique appears to be slower than the calculator, practice will show otherwise. Being able to quickly estimate dB values can prove to be a very handy skill in the electronics field. This is particularly true in larger, multi-stage designs.

Example 10.2.4

A three-stage amplifier has gains of 10 dB, 16 dB, and 14 dB per section. What is the total dB gain?

Because dB gains are a log form, just add the individual stage gains to arrive at the system gain.

$$G'_{total} = G'_1 + G'_2 + G'_3$$

$$G'_{total} = 10dB + 16dB + 14dB$$

$$G'_{total} = 40dB$$

As you may have noticed, all of the examples up to this point have used power gain and not voltage gain. You may be tempted to use the same equations for voltage gain. In a word, don't. If you think back for a moment, you will recall that power varies as the square of voltage. In other words, a doubling of voltage will produce a quadrupling of power. If you were to use the same dB conversions, a doubling of voltage would be 3 dB, yet, because the power has quadrupled, this would indicate a 6 dB rise. Consequently, voltage gain (and current gain as well) are treated in a slightly different fashion. We would rather have our doubling of voltage work out to 6 dB, so that it matches the power calculation. The correction factor is very simple. Because power varies as the second power of voltage, the dB form should be twice as large for voltage (remember, exponentiation turns into multiplication when using logs). Applying this factor to Equation 10.2.2 yields:

$$A'_v = 20 \log_{10} A_v \tag{10.2.4}$$

Be careful though, the Bel voltage gain only equals the Bel power gain if the input and output impedances of the system are matched (you may recall from your other work that it is quite possible to design a circuit with vastly different voltage and power gains). If we were to recalculate our earlier table of common factors, we would find that a doubling of voltage gain is equivalent to a 6 dB rise, and a ten fold increase is equivalent to a 20 dB rise, twice the number of decibels of their power gain counterparts.

Note that current gain may be treated in the same manner as voltage gain (although this is less commonly done in practice).

Example 10.2.5

A circuit has an output signal of 2 V for an input of 50 mV. What is A'_v? First find the ordinary gain.

$$A_v = \frac{2}{0.05} = 40$$

Now convert to dB form.

$$A'_v = 20 \log_{10} 40$$

$$A'_v = 20 \times 1.602$$

$$A'_v = 32.04dB$$

The approximation technique yields $40 = 2 \cdot 2 \cdot 10$, or 6 dB + 6 dB + 20 dB, or 32 dB.

To convert $A'v$ to A, reverse the process.

$$A_v = \log_{10}^{-1} \frac{A'_v}{20} \tag{10.2.5}$$

Example 10.2.6

An amplifier has a gain of 26 dB. If the input signal is 10 mV, what is the output?

$$A_v = \log_{10}^{-1} \frac{A'_v}{20}$$

$$A_v = \log_{10}^{-1} \frac{26}{20}$$

$$A_v = 19.95$$

$$V_{out} = A_v V_{in}$$

$$V_{out} = 19.95 \times 10mV$$

The final point to note in this section is that, as in the case of power gain, a negative decibel value indicates a loss. Therefore, a 2:1 voltage divider would have a gain of –6 dB.

Signal Representation in dBW and dBV

As you can see from the preceding section, it is possible to spend considerable time converting between decibel gains and ordinary voltages and powers. Because the decibel form does offer advantages for gain measurement, it would make sense to use a decibel form for power and voltage levels as well. This is a relatively straightforward process. There is no reason why we can't express a power or voltage in a logarithmic form. Because a dB value just indicates a ratio, all we need to do is decide on a reference (i.e., a comparative base for the ratio). For power measurements, a likely choice would be 1 watt. In other words, we can describe a power as being a certain number of dB above or below 1 watt. Positive values will indicate powers greater than 1 watt, while negative values will indicate powers less than 1 watt. In general equation form:

$$P' = 10 \log_{10} \frac{P}{reference} \tag{10.2.6}$$

The answer will have units of dBW, that is, decibels relative to 1 watt.

Example 10.2.7

A power amplifier has a maximum output of 120 W. What is this power in dBW?

$$P' = 10 \log_{10} \frac{P}{1Watt}$$

$$P' = 10 \log_{10} \frac{120W}{1W}$$

$$P' = 20.8dBW$$

There is nothing sacred about the 1 watt reference, short of its convenience. We could just as easily choose a different reference. Other common reference points are 1 milliwatt (dBm) and 1 femtowatt (dBf). Obviously, dBf is used for very low signal levels, such as those coming from an antenna. dBm is in very wide use in the communications industry. To use these other references, just divide the given power by the new reference.

Example 10.2.8

A small personal audio music player delivers 200 mW to its headphones. What is this output power in dBW, and in dBm?

For an answer in units of dBW, use the 1 watt reference.

$$P' = 10\log_{10}\frac{P}{1Watt}$$

$$P' = 10\log_{10}\frac{200mW}{1W}$$

$$P' = -7dBW$$

For units of dBm, use a 1 milliwatt reference.

$$P' = 10\log_{10}\frac{P}{1Watt}$$

$$P' = 10\log_{10}\frac{200mW}{1mW}$$

$$P' = 23dBm$$

200 mW, –7 dBW, and 23 dBm are three ways of saying the same thing. Note that the dBW and dBm values are 30 dB apart. This will always be true, because the references are a factor of 1000 (30 dB) apart.

In order to transfer a dBW or similar value into watts, reverse the process.

$$P = \log_{10}^{-1}\frac{P'}{10} \times reference \tag{10.2.7}$$

Example 10.2.9

A studio microphone produces a 12 dBm signal while recording normal speech. What is the output power in watts?

$$P = \log_{10}^{-1}\frac{P'}{10} \times reference$$

$$P = \log_{10}^{-1}\frac{12dBm}{10} \times 1mW$$

$$P = 15.8mW = 0.0158W$$

For voltages, we can use a similar system. A logical reference is 1 V, with the resulting units being dBV. As before, these voltage measurements will use a multiplier of 20 instead of 10.

$$V' = 20\log_{10}\frac{V}{reference} \tag{10.2.8}$$

Example 10.2.10

A test oscillator produces a 2 volt signal. What is this value in dBV?

$$V' = 20\log_{10}\frac{V}{reference}$$

$$V' = 20\log_{10}\frac{2V}{1V}$$

$$V' = 6.02dB$$

When both circuit gains and signal levels are specified in decibel form, analysis can be very quick. Given an input level, simply add the gain to it in order to find the output level. Given input and output levels, subtract them in order to find the gain.

Example 10.2.11

A computer hard drive read/write amplifier exhibits a gain of 35 dB. If the input signal is –42 dBV, what is the output signal?

$$V'_{out} = V'_{in} + A'_v$$

$$V'_{out} = -42dBV + 35dB$$

$$V'_{out} = -7dBV$$

Note that the final units are dBV and not dB, thus indicating a voltage and not merely a gain.

Example 10.2.12

A guitar power amp needs an input of 20 dBm to achieve an output of 25 dBW. What is the gain of the amplifier in dB?

First, it is necessary to convert the power readings so that they share the same reference unit. Because dBm represents a reference 30 dB smaller than the dBW reference, just subtract 30 dB to compensate.

$$20dBm = -10dBW$$

$$G' = P'_{out} - P'_{in}$$

$$G' = 25dBW - (-10dBW)$$

$$G' = 35dB$$

Note that the units are dB and not dBW. This is very important! Saying that the gain is “so many” dBW is the same as saying the gain is “so many” watts. Obviously, gains are “pure” numbers and do not carry units such as watts or volts.

The usage of a dB-based system is shown graphically in Figure 10.2.1. Note how the stage gains are added to the input signal to form the output. Even large circuits can be quickly analyzed in this form. To make life in the lab even easier, it is possible to take measurements directly in dB form. By doing this, you need never convert while troubleshooting a design. For general-purpose work, voltage measurements are the norm, and therefore a dBV scale is often used.

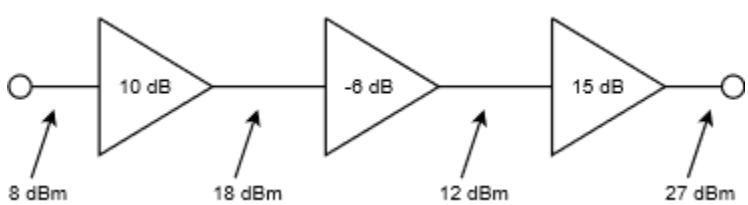

Figure 10.2.1: Multistage dB application.

Items Of Interest In The Laboratory

When using a digital meter on a dBV scale it is possible to “underflow” the meter if the signal is too weak. This will happen if you try to measure around zero volts, for example. If you attempt to calculate the corresponding dBV value, your calculator will probably show “error”. The effective value is negative infinite dBV. The meter will certainly have a hard time showing this value! Another item of interest revolves around the use of dBm measurements. It is common to use a voltmeter to make dBm measurements, in lieu of a wattmeter. While the connections are considerably simpler, a voltmeter cannot measure power. How is

this accomplished then? Well, as long as the circuit impedance is known, power can be derived from a voltage measurement. A common impedance in communication systems (such as recording studios) is 600 Ω, so a meter can be calibrated to give correct dBm readings by using Power Law. If this meter is used on a non-600 Ω circuit, the readings will no longer reflect accurate dBm values (but will still properly reflect relative changes in dB).

Finally, recalling the chapter introduction regarding "110 dB" concert levels, properly, that would read "110 dB-SPL", referring to "Sound Pressure Level". The reference level corresponding to 0 dB-SPL is the quietest sound the average person can hear; the threshold of hearing (20 micropascals for young healthy humans). Thus, 110 dB-SPL refers to a sound pressure that is 110 dB greater than the threshold of hearing. Typically, 1 dB represents a "just noticeable difference" in loudness for humans, although this depends on the precise frequency and sound pressure.

This page titled 10.2: The Decibel is shared under a CC BY-NC-SA 4.0 license and was authored, remixed, and/or curated by James M. Fiore via source content that was edited to the style and standards of the LibreTexts platform.

10.3: Bode Plots

The Bode plot is a graphical response prediction technique that is useful for both circuit design and analysis. It is named after Hendrik Wade Bode, an American engineer known for his work in control systems theory and telecommunications. A Bode plot is, in actuality, a pair of plots: One graphs the signal gain or loss of a system versus frequency, while the other details the circuit phase versus frequency. Both of these items are very important in the design of well-behaved, optimal circuits.

Generally, Bode plots are drawn with logarithmic frequency axes, a decibel gain axis, and a phase axis in degrees. First, let's take a look at the gain plot. A typical gain plot is shown Figure $10.3.1$. Remember, "gains" can be fractional, as with a voltage divider.

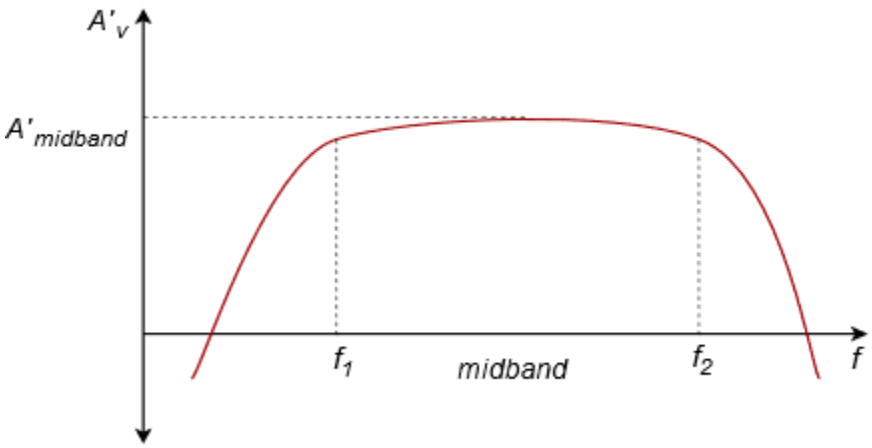

Figure $10.3.1$: Generic gain plot.

Note how the plot is relatively flat in the middle, or midband, region. The gain value in this region is known as the midband gain. In purely passive circuits this value may be fractional (i.e., a negative dB value). At either extreme of the midband region, the gain begins to decrease. The gain plot shows two important frequencies, f_1 and f_2. f_1 is the lower break frequency while f_2 is the upper break frequency. The gain at the break frequencies is 3 dB less than the midband gain. These frequencies are also known as the half-power points, or corner frequencies. Normally, amplifiers are only used for signals between f_1 and f_2. The exact shape of the rolloff regions will depend on the design of the circuit. For example, it is possible to design amplifiers with no lower break frequency (i.e., a DC amplifier), however, all amplifiers will exhibit an upper break. The break points are caused by the presence of circuit reactances, typically coupling and stray capacitances. The gain plot is a summation of the midband response with the upper and lower frequency limiting networks. Let's take a look at the lower break, f_1.

Lead Network Gain Response

Reduction in low frequency gain is caused by lead networks. A generic lead network is shown in Figure $10.3.2$. It gets its name from the fact that the output voltage developed across R leads the input. At very high frequencies the circuit will be essentially resistive. Conceptually, think of this as a simple voltage divider. The divider ratio depends on the reactance of C. As the input frequency drops, X_c increases. This makes V_{out} decrease. At very high frequencies, where $X_c \ll R$, V_{out} is approximately equal to V_{in}. This can be seen graphically in Figure $10.3.3$, where the frequency axis is normalized to f_c. The break frequency (i.e., the frequency at which the signal has decreased by 3 dB) is found via the standard equation,

$$f_c = \frac{1}{2\pi RC}$$

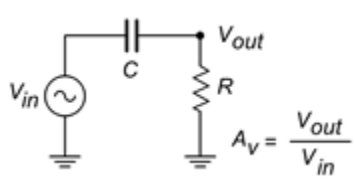

Figure $10.3.2$: Lead network.

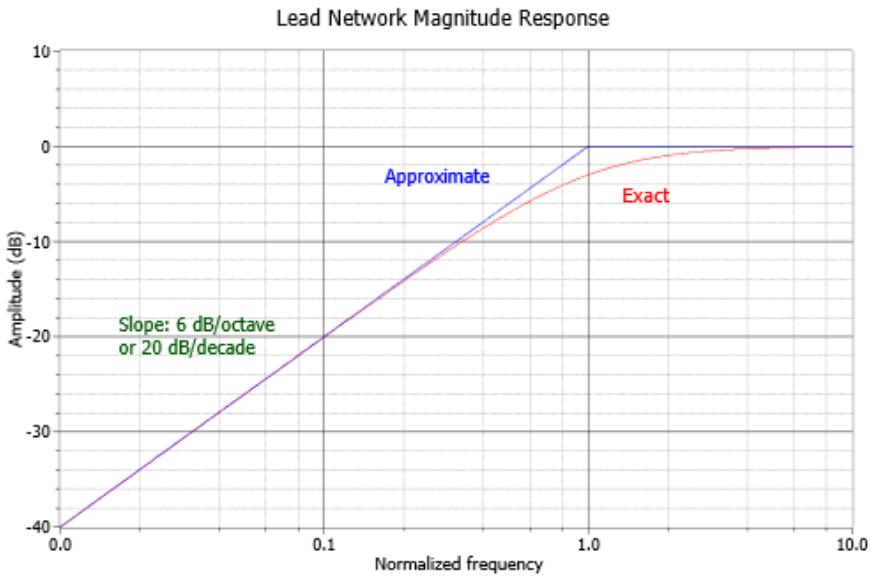

Figure 10.3.3: Lead network gain plot.

The response below f_c will be a straight line if a decibel gain axis and a logarithmic frequency axis are used. This makes for very quick and convenient sketching of circuit response. The slope of this line is 6 dB per octave (an octave is a doubling or halving of frequency, e.g., 800 Hz is 3 octaves above 100 Hz)[1]. This range covers a factor of two in frequency. This slope may also be expressed as 20 dB per decade, where a decade is a factor of 10 in frequency. With reasonable accuracy, this curve may be approximated as two line segments, called asymptotes, shown in Figure 10.3.3 (blue). The shape of this curve is the same for any lead network. Because of this, it is very easy to find the approximate gain at any given frequency as long as f_c is known. It is not necessary to go through reactance and phasor calculations. To create a general response equation, start with the voltage divider rule to find the gain:

$$\frac{V_{out}}{V_{in}} = \frac{R}{R - jX_c}$$

$$\frac{V_{out}}{V_{in}} = \frac{R\angle 0}{\sqrt{R^2 + X_c^2}\angle - \arctan\frac{X_c}{R}}$$

The magnitude of this is,

$$|A_v| = \frac{R}{\sqrt{R^2 + X_c^2}} \tag{10.3.1}$$

$$|A_v| = \frac{1}{\sqrt{1 + \frac{X_c^2}{R^2}}}$$

Recalling that,

$$f_c = \frac{1}{2\pi RC}$$

we may say,

$$R = \frac{1}{2\pi f_c C}$$

For any frequency of interest, f,

$$X_c = \frac{1}{2\pi fC}$$

Equating the two preceding equations yields,

$$\frac{f_c}{f} = \frac{X_c}{R} \tag{10.3.2}$$

Substituting Equation 10.3.2 in Equation 10.3.1 gives,

$$A_v = \frac{1}{\sqrt{1 + \frac{f_c^2}{f^2}}} \tag{10.3.3}$$

To express A_v in dB, substitute Equation 10.3.3 into equation 10.2.5.

$$A_v' = 20 \log_{10} \frac{1}{\sqrt{1 + \frac{f_c^2}{f^2}}}$$

After simplification, the final result is:

$$A_v' = -10 \log_{10} \left(1 + \frac{f_c^2}{f^2}\right) \tag{10.3.4}$$

Where

f_c is the critical frequency,

f is the frequency of interest,

A_v' is the decibel gain at the frequency of interest.

Example 10.3.1

A circuit has a lower break frequency of 40 Hz. How much signal is lost at 10 Hz?

$$A_v' = -10 \log_{10} \left(1 + \frac{f_c^2}{f^2}\right)$$

$$A_v' = -10 \log_{10} \left(1 + \frac{40^2}{10^2}\right)$$

$$A_v' = -12.3dB$$

In other words, the signal level is 12.3 dB lower than it is in the midband. Note that 10 Hz is 2 octaves below the break frequency. Because the cutoff slope is 6 dB per octave, each octave loses 6 dB. Therefore, the approximate result is –12 dB, which double-checks the exact result. Without the lead network, the gain would stay at 0 dB all the way down to DC (0 Hz.)

Lead Network Phase Response

At very low frequencies, the circuit of Figure 10.3.2 is largely capacitive. Because of this, the output voltage developed across R leads by 90 degrees. At very high frequencies the circuit will be largely resistive. At this point V_{out} will be in phase with V_{in}. At the critical frequency, V_{out} will lead by 45 degrees. A general phase graph is shown in Figure 10.3.4. As with the gain plot, the phase plot shape is the same for any lead network. The general phase equation may be obtained from the voltage divider:

$$\frac{V_{out}}{V_{in}} = \frac{R}{R - jX_c}$$

$$\frac{V_{out}}{V_{in}} = \frac{R\angle 0}{\sqrt{R^2 + X_c^2}\angle - \arctan \frac{X_c}{R}}$$

The phase portion of this is,

$$\theta = \arctan \frac{X_c}{R}$$

By using equation 1.6, this simplifies to,

$$\theta = \arctan \frac{f_c}{f} \tag{10.3.5}$$

Where

f_c is the critical frequency,

f is the frequency of interest,

θ is the phase angle at the frequency of interest.

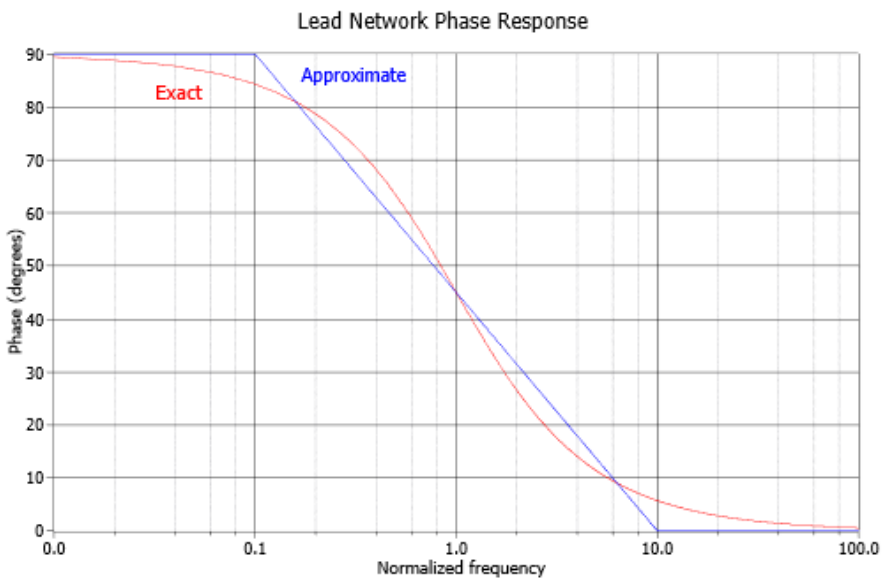

Figure $10.3.4$: Lead network phase response.

Often, an approximation, such as the blue line in Figure $10.3.4$, is sufficient. By using Equation $10.3.5$, you can show that this approximation is off by no more than 6 degrees at the corners.

Example $10.3.2$

A telephone amplifier has a lower break frequency of 120 Hz. What is the phase response one decade below and one decade above?

One decade below 120 Hz is 12 Hz, while one decade above is 1.2 kHz.

$$\theta = \arctan \frac{f_c}{f}$$

$$\theta = \arctan \frac{120Hz}{12Hz}$$

$\theta = 84.3$ degrees one decade below f_c (i.e, approaching 90 degrees)

$$\theta = \arctan \frac{120Hz}{1.2kHz}$$

$\theta = 5.71$ degrees one decade above f_c (i.e., approaching 0 degrees)

Remember, if a circuit or amplifier is direct-coupled, and has no lead networks, the phase will remain at 0 degrees right back to 0 Hz (DC).

Lag Network Response

Unlike its lead network counterpart, all systems will contain lag networks. In essence, it is little more than an inverted lead network. As you can see from Figure $10.3.5$, it simply transposes the R and C locations. Because of this, the response tends to be inverted as well. In terms of gain, X_c is very large at low frequencies, and thus V_{out} equals V_{in}. At high frequencies, X_c decreases, and V_{out} falls. The break point occurs when X_c equals R. The general gain plot is shown in Figure $10.3.6$. Like the lead network response, the slope of this curve is −6 dB per octave (or −20 dB per decade.) Note that the slope is negative instead of positive. We can derive a general gain equation for this circuit in virtually the same manner as we did for the lead network. The derivation is left as an exercise.

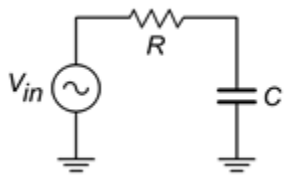

Figure $10.3.5$: Lag network.

$$A_v' = -10\log_{10}\left(1+\frac{f^2}{f_c^2}\right) \tag{10.3.6}$$

Where

f_c is the critical frequency,

f is the frequency of interest,

A_v' is the decibel gain at the frequency of interest.

Note that this equation is almost the same as Equation $10.3.4$. The only difference is that f and f_c have been transposed.

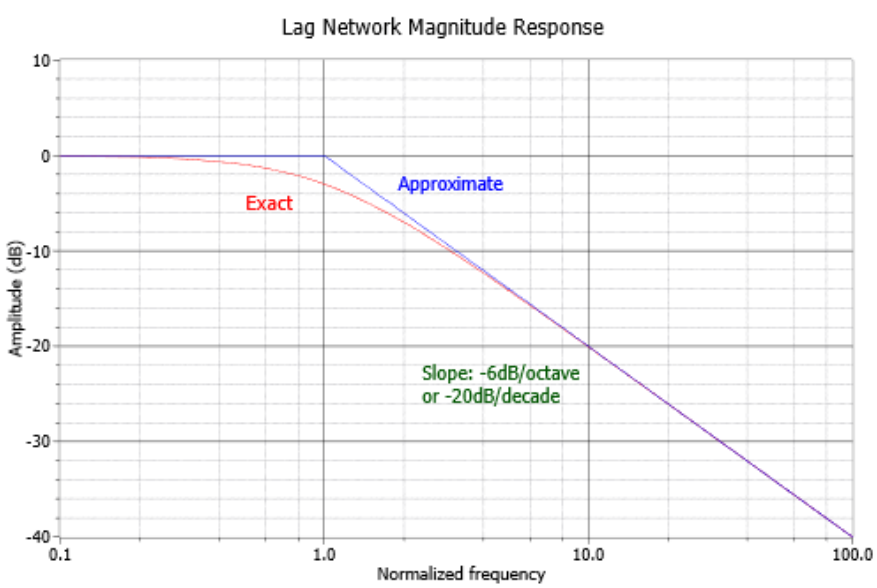

Figure $10.3.6$: Lag network gain plot.

In a similar vein, we may examine the phase response. At very low frequencies, the circuit is basically capacitive. Because the output is taken across C, V_{out} will be in phase with V_{in}. At very high frequencies, the circuit is essentially resistive. Consequently,

the output voltage across C will lag by 90 degrees. At the break frequency the phase will be −45 degrees. A general phase plot is shown in Figure $10.3.7$. As with the lead network,we may derive a phase equation. Again, the exact steps are very similar, and left as an exercise.

$$\theta = -90 + \arctan \frac{f_c}{f} \tag{10.3.7}$$

Where

f_c is the critical frequency,

f is the frequency of interest,

θ is the phase angle at the frequency of interest.

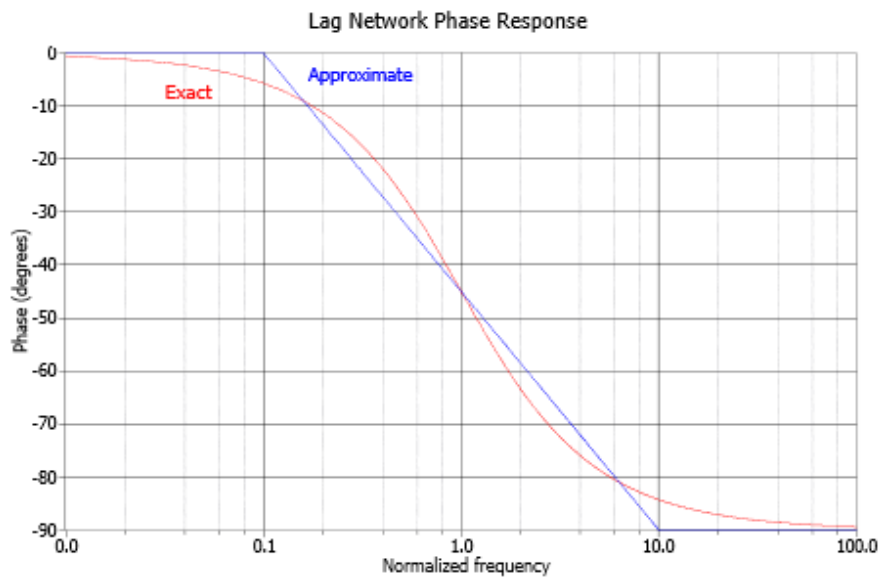

Figure $10.3.7$: Lag network phase response.

Example $10.3.3$

A medical ultra sound transducer feeds a lag network with an upper break frequency of 150 kHz. What are the gain and phase values at 1.6 MHz?

Because this represents a little more than a 1 decade increase, the approximate values are −20 dB and −90 degrees, from Figures $10.3.4$ and $10.3.5$, respectively. The exact values are:

$$A_v' = -10 \log_{10} \left(1 + \frac{f^2}{f_c^2}\right)$$

$$A_v' = -10 \log_{10} \left(1 + \frac{1.6MHz^2}{150kHz^2}\right)$$

$$A_v' = -20.6dB$$

$$\theta = -90 + \arctan \frac{f_c}{f}$$

$$\theta = -90 + \arctan \frac{150kHz}{1.6MHz}$$

$$\theta = -84.6 \text{ degrees}$$

The complete Bode plot for this network is shown in Figure $10.3.8$. It is very useful to examine both plots simultaneously. In this manner you can find the exact phase change for a given gain quite easily. For example, if you look carefully at the plots of Figure $10.3.8$, you will note that at the critical frequency of 150 kHz, the total phase change is –45 degrees.

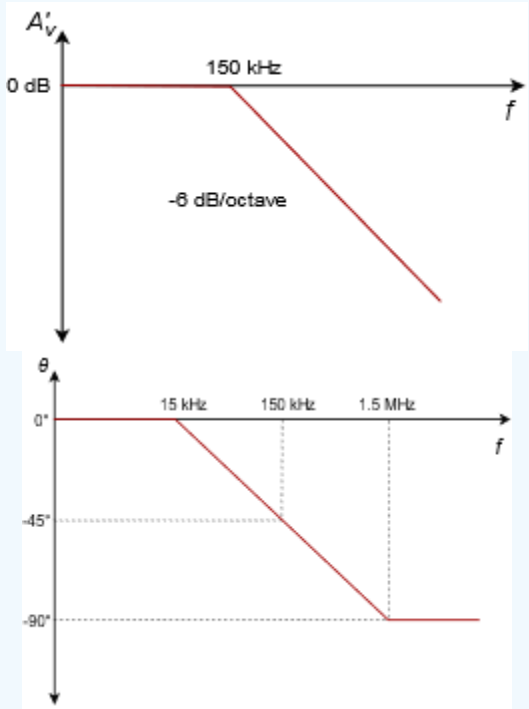

Figure $10.3.8$: Bode plot for 150 kHz lag.

Because this circuit involved the use of a single lag network, this is exactly what you would expect.

Rise Time versus Bandwidth

For pulse-type signals, the “speed” of a circuit is often expressed in terms of its rise time. If a square pulse such as Figure $10.3.9a$ is passed into a simple lag network, the capacitor charging effect will produce a rounded variation, as seen in Figure $10.3.9b$. This effect places an upper limit on the duration of pulses that a given circuit can handle without producing excessive distortion.

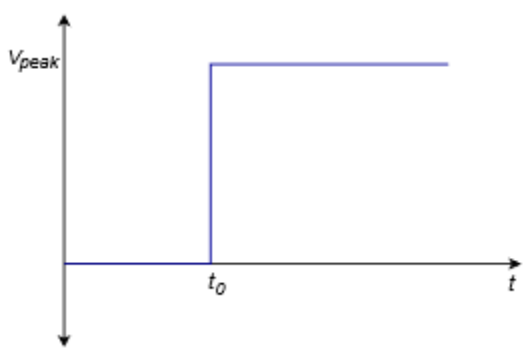

Figure $10.3.9a$: Pulse rise time effect: Input to network.

By definition, rise time is the amount of time it takes for the signal to traverse from 10% to 90% of the peak value of the pulse. The shape of this pulse is defined by the standard capacitor charge equation examined in earlier course work, and is valid for any system with a single clearly dominant lag network.

$$V_{out} = V_{peak}\left(1 - \epsilon^{\frac{-t}{RC}}\right) \tag{10.3.8}$$

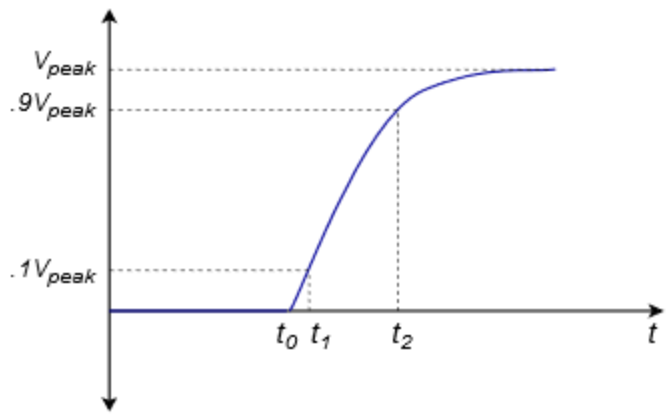

Figure $10.3.9b$: Pulse rise time effect: Output of network.

In order to find the time internal from the initial starting point to the 10% point, set V_{out} to $0.1V_{peak}$ in Equation 10.3.8 and solve for t_1.

$$\begin{aligned} 0.1V_{peak} &= V_{peak}\left(1-\epsilon^{\frac{-t_1}{RC}}\right) \\ 0.1V_{peak} &= V_{peak} - V_{peak}\epsilon^{\frac{-t_1}{RC}} \\ 0.9V_{peak} &= V_{peak}\epsilon^{\frac{-t_1}{RC}} \\ 0.9 &= \epsilon^{\frac{-t_1}{RC}} \\ \log 0.9 &= \frac{-t_1}{RC} \\ t_1 &= 0.105RC \end{aligned} \tag{10.3.9}$$

To find the interval up to the 90% point, follow the same technique using $0.9V_{peak}$. Doing so yields:

$$t_2 = 2.303RC \tag{10.3.10}$$

The rise time, T_r, is the difference between t_1 and t_2

$$\begin{aligned} T_r &= t_1 - t_2 \\ T_r &= 2.303RC - 0.105RC \\ T_r &\approx 2.2RC \end{aligned} \tag{10.3.11}$$

Equation 10.3.11 ties the rise time to the lag network's R and C values. These same values also set the critical frequency f_2. By combining Equation 10.3.7 with the basic critical frequency relationship, we can derive an equation relating f_2 to T_r.

$$f_2 = \frac{1}{2\pi RC}$$

Solving 10.3.11 in terms of RC, and substituting yields

$$\begin{aligned} f_2 &= \frac{2.2}{2\pi T_r} \\ f_2 &= \frac{0.35}{T_r} \end{aligned} \tag{10.3.12}$$

Where

f_2 is the upper critical frequency,

T_r is the rise time of the output pulse.

Example 10.3.4

Determine the rise time for a lag network critical at 100 kHz.

$$f_2 = \frac{0.35}{T_r}$$

$$T_r = \frac{0.35}{f_2}$$

$$T_r = \frac{0.35}{100kHz}$$

$$T_r = 3.5\mu s$$

References

[1]The term octave is borrowed from the field of music. It gets its name from the fact that there are eight notes in the standard western scale: do-re-mi-fa-sol-la-ti-do.

This page titled 10.3: Bode Plots is shared under a CC BY-NC-SA 4.0 license and was authored, remixed, and/or curated by James M. Fiore via source content that was edited to the style and standards of the LibreTexts platform.

10.4: Combining the Elements - Multi-Stage Effects

A complete gain or phase plot combines three elements: (1) the midband response, (2) the lead response, and (3) the lag response. Normally, a particular design will contain multiple lead and lag networks. The complete response is the summation of the individual responses. For this reason, it is useful to find the dominant lead and lag networks. These are the networks that affect the midband response first. For lead networks, the dominant one will be the one with the highest f_c. Conversely, the dominant lag network will be the one with the lowest f_c. It is very common to approximate the complete system response by drawing straight-line segments such as those given in Figures 10.3.2 and 10.3.4. The process goes something like this:

- Locate all f_cs on the frequency axis.
- Draw a straight line between the dominant lag and lead f_cs at the midband gain. If the system does not contain any lead networks, continue the midband gain line down to DC.
- Draw a 6 dB per octave slope between the dominant lead and the next lower lead network.
- Because the effects of the networks are cumulative, draw a 12 dB per octave slope between the second lead f_c and the third f_c. After the third f_c, the slope should be 18 dB per octave, after the fourth, 24 dB per octave, and so on.
- Draw a –6 dB per octave slope between the dominant lag f_c and the next highest f_c. Again, the effects are cumulative, so increase the slope by –6 dB at every new f_c.

Example 10.4.1

Draw the Bode gain plot for the following amplifier: A_v' midband = 26 dB, one lead network critical at 200 Hz, one lag network critical at 10 kHz, and another lag network critical at 30 kHz.

The dominant lag network is 10 kHz. There is only one lead network, so it's dominant by default.

- Draw a straight line between 200 Hz and 10 kHz at an amplitude of 26 dB.
- Draw a 6 dB per octave slope below 200 Hz. To do this, drop down one octave (100 Hz) and subtract 6 dB from the present gain (26 dB – 6dB = 20 dB.) The line will start at the point 200 Hz/26 dB, and pass through the point 100 Hz/20 dB. Because there are no other lead networks, this line may be extended to the left edge of the graph.
- Draw a –6 dB per octave slope between 10 kHz and 30 kHz. The construction point will be 20 kHz/20 dB. Continue this line to 30 kHz. The gain at the 30 kHz intersection should be around 16 dB. The slope above this second f_c will be –12 dB per octave. Therefore, the second construction point should be at 60 kHz/4 dB (one octave above 30 kHz, and 12 dB down from the 30 kHz gain). Because this is the final lag network, this line may be extended to the right edge of the graph.

A completed graph is shown in Figure 10.4.1.

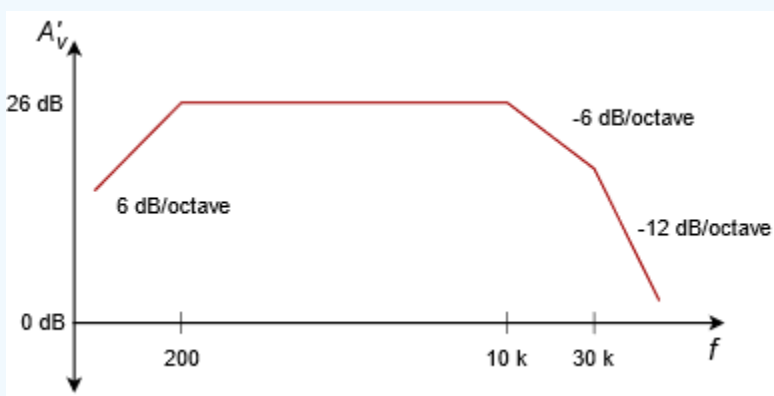

Figure 10.4.1: Gain plot of complete amplifier.

There is one item that should be noted before we leave this section, and that is the concept of narrowing. Narrowing occurs when two or more networks share similar critical frequencies, and one of them is a dominant network. The result is that the true –3 dB breakpoints may be altered. Here is an extreme example. Assume that a circuit has two lag networks, both critical at 1 MHz. A

Bode plot would indicate that the breakpoint is 1 MHz. This is not really true. Remember, the effects of lead and lag networks are cumulative. Because each network produces a 3 dB loss at 1 MHz, the net loss at this frequency is actually 6 dB. The true –3 dB point will have been shifted. The Bode plot only gives you the approximate shape of the response.

This page titled 10.4: Combining the Elements - Multi-Stage Effects is shared under a CC BY-NC-SA 4.0 license and was authored, remixed, and/or curated by James M. Fiore via source content that was edited to the style and standards of the LibreTexts platform.

10.5: Summary

We have seen how to convert gains and signals into a decibel form for both powers and voltages. This is convenient because what would require multiplication and division under the ordinary scheme only requires simple addition and subtraction in the dB scheme. Along with this, dB measurement is used almost exclusively for Bode gain plots. A Bode plot details a system's gain magnitude and phase response. For gain, the amplitude is measured in dB, while the frequency is normally presented in log form. For a phase plot, phase is measured in degrees, and again, the frequency axis is logarithmic. The changes in gain and phase at the frequency extremes are caused by lead and lag networks. Lead networks cause the low frequency gain to roll off. The roll off rate is 6 dB per octave per network. The phase will change from +90 degrees to 0 degrees per network. Lag networks cause the high frequency gain to roll off at a rate of −6 dB per octave per network. The phase change per lag network is from 0 degrees to −90 degrees.

Review Questions

1. What are the advantages of using decibels over the ordinary scheme?

2. How do decibel power and voltage gain calculations differ?

3. Define the differences between dB, dBW, dBm, dBV and dBu.

4. Describe a Bode plot.

5. What is a lead network? What general response does it yield?

6. What is a lag network? What general response does it yield?

7. What do the terms f_1 and f_2 indicate about a system's response?

8. What are the rolloff slopes for lead and lag networks?

9. What are the phase changes produced by individual lead and lag networks?

10. How is rise time related to upper break frequency?

11. How do multiple lead or lag networks interact to form an overall system response?

12. How does the decibel measurement scheme differ from the ordinary method of indicating gains and signal level?

This page titled 10.5: Summary is shared under a CC BY-NC-SA 4.0 license and was authored, remixed, and/or curated by James M. Fiore via source content that was edited to the style and standards of the LibreTexts platform.

10.6: Exercises

Analysis

emphasis

1. Convert the following power gains into dB form:

a) 10

b) 80

c) 500

d) 1

e) 0.2

f) 0.03.

2. Convert the following dB power gains into ordinary form:

a) 0 dB

b) 12 dB

c) 33.1 dB

d) 0.2 dB

e) −5.4 dB

f) −20 dB.

3. An amplifier has an input signal of 1 mW, and produces a 2 W output. What is the power gain in dB?

4. A Hi-Fi power amplifier has a maximum output of 50 W and a power gain of 19 dB. What is the maximum input signal power?

5. An amplifier with a power gain of 27 dB is driven by a 25 mW source. Assuming the amplifier doesn't clip, what is the output signal in watts?

6. Convert the following voltage gains into dB form:

a) 10

b) 40

c) 250

d) 1

e) 0.5

f) 0.004

7. Convert the following dB voltage gains into ordinary form:

a) 0.5 dB

b) 0 dB

c) 46 dB

d) 10.7 dB

e) −8 dB

f) −14.5 dB

8. A guitar pre-amp has a gain of 44 dB. If the input signal is 12 mV, what is the output signal?

9. A video amplifier has a 140 mV input and a 1.2 V output. What is the voltage gain in dB?

10. The pre-amp in a particular tape deck can output a maximum signal of 4 V. If this amplifier has a gain of 18 dB, what is the maximum input signal?

11. Convert the following powers into dBW:

a) 1 W

b) 23 W

c) 6.5 W

d) 0.2W

e) 2.3 mW

f) 1.2 kW

g) 0.045 mW

h) 0.3 μW

i) 5.6E−18 W.

12. Repeat Problem 11 for units of dBm.

13. Repeat Problem 11 for units of dBf.

14. Convert the following voltages into dBV:

a) 12.4 V

b) 1 V

c) 0.25 V

d) 1.414 V

e) 0.1 V

f) 10.6 kV

g) 13 mV

h) 2.78 μV.

15. A two stage power amplifier has power gains of 12 dB and 16 dB. What is the total gain in dB and in ordinary form?

16. If the amplifier of Problem 15 has an input of –18 dBW, what is the final output in dBW? in dBm? in watts?

17. Referring to Figure 1.1, what are the various stages' outputs if the input is changed to –4 dBm? to –34 dBW?

18. Which amplifier has the greatest power output?

a) 50 watts

b) 18 dBW

c) 50 dBm.

19. Which amplifier has the greatest power output?

a) 200 mW

b) –10 dBW

c) 22 dBm.

20. A three stage amplifier has voltage gains of 20 dB, 5 dB, and 12 dB respectively. What is the total voltage gain in dB and in ordinary form?

21. If the circuit of Problem 20 has an input voltage of –16 dBV, what are the outputs of the various stages in dBV? In volts?

22. Repeat Problem 21 for an input of 12 mV.

23. Which amplifier produces the largest output voltage?

a) 15 V

b) 16 dBV

Bode plot emphasis

24. Given a lead network critical at 3 kHz, what are the gain and phase values at 100 Hz, 3 kHz, and 40 kHz?

25. Given a lag network tuned to 700 kHz, what are the gain and phase values at 50 kHz, 700 kHz, and 10 MHz? What is the rise time?

26. A noninverting amplifier has a midband voltage gain of 18 dB and a single lag network at 200 kHz. What are the gain and phase values at 30 kHz, 200 kHz, and 1 MHz. What is the rise time?

27. Repeat Problem 26 for an inverting (–180 degrees) amplifier.

28. Draw the Bode plot for the circuit of Problem 26.

29. Draw the Bode plot for the circuit of Problem 27.

30. An inverting (–180 degrees) amplifier has a midband gain of 32 dB and a single lead network critical at 20 Hz (assume the lag network f_c is high enough to ignore for low frequency calculations). What are the gain and phase values at 4 Hz, 20Hz, and 100 Hz?

31. Repeat Problem 29 with a noninverting amplifier.

32. Draw the Bode plot for the circuit of Problem 30.

33. Draw the Bode plot for the circuit of Problem 31.

34. A noninverting amplifier used for ultrasonic applications has a midband gain of 41 dB, a lag network critical at 250 kHz, and a lead network critical at 30 kHz. Draw its gain Bode plot.

35. Find the gain and phase at 20 kHz, 100 kHz, and 800 kHz for the circuit of Problem 34.

36. If the circuit of Problem 34 has a second lag network added at 300 kHz, What are the new gain and phase values at 20 kHz, 100 kHz, and 800 kHz?

37. Draw the gain Bode plot for the circuit of Problem 36.

38. What are the maximum and minimum phase shifts across the entire frequency spectrum for the circuit of Problem 36?

39. A noninverting DC amplifier has a midband gain of 36 dB, and lag networks at 100 kHz, 750 kHz, and 1.2 MHz. Draw its gain Bode plot.

40. What are the maximum and minimum phase shifts across the entire frequency spectrum for the circuit of Problem 39?

41. What is the maximum rate of high frequency attenuation for the circuit of Problem 39 in dB/Decade?

42. If an amplifier has two lead networks, what is the maximum rate of low frequency attenuation in dB/Octave?

Challenge

43. You would like to use a voltmeter to take dBm readings in a 600 Ω system. What voltage should produce 0 dBm?

44. Assuming that it takes about an 8 dB increase in sound pressure level in order to produce a sound that is subjectively “twice as loud” to the human ear, can a Hi-Fi using a 100 W amplifier sound twice as loud as one with a 40 W amplifier (assuming the same loudspeakers)?

45. Hi-Fi amplifiers are often rated with a “headroom factor” in dB. This indicates how much extra power the amplifier can produce for short periods of time, over and above its nominal rating. What is the maximum output power of a 250 W amplifier with 1.6 dB headroom?

46. If the amplifier of Problem 34 picks up an extraneous signal that is a –10 dBV sine wave at 15 kHz, what is the output?

47. If the amplifier of Problem 39 picks up a high frequency interference signal at 30 MHz, how much is it attenuated over a normal signal? If this input signal is measured at 2 dBV, what should the output be?

48. If an amplifier has two lag networks, and both are critical at 2 MHz, is the resulting f_2 less than, equal to, or greater than 2 MHz?

49. If an amplifier has two lead networks, and both are critical at 30 Hz, is the resulting f_1 less than, equal to, or greater than 30 Hz?

Simulation

50. Use a simulator to plot the Bode gain response of the circuit in Problem 39.

51. Use a simulator to plot the Bode phase response of the circuit in Problem 34.

52. Use a simulation program to generate a Bode plot for a lead network comprised of a 1 kΩ resistor and a 100 nF capacitor.

This page titled 10.6: Exercises is shared under a CC BY-NC-SA 4.0 license and was authored, remixed, and/or curated by James M. Fiore via source content that was edited to the style and standards of the LibreTexts platform.

INDEX

A

admittance
3.3: Parallel Impedance
Alternating Current
1.2: Sinusoidal Waveforms

autonumheader:yes
1: Fundamentals
1.1: Introduction
1.3: Basic Fourier Analysis
1.5: Reactance and Impedance
1.6: Phasor Diagrams
1.7: Summary
1.8: Exercises
10: Decibels and Bode Plots
10.1: Introduction
10.2: The Decibel
10.3: Bode Plots
10.4: Combining the Elements - Multi-Stage Effects
10.5: Summary
10.6: Exercises
2: Series RLC Circuits
2.1: Introduction
2.2: The Series Connection
2.3: Series Impedance
2.4: Series Circuit Analysis
2.5: Concerning Practical Inductors
2.6: Summary
2.7: Exercises
3: Parallel RLC Circuits
3.1: Introduction
3.2: The Parallel Connection
3.4: Parallel Circuit Analysis
3.5: Summary
3.6: Exercises
4: Series-Parallel RLC Circuits
4.1: Introduction
4.2: The Series-Parallel Connection
4.3: Series-Parallel Impedance
4.4: Series-Parallel Circuit Analysis
4.5: Summary
4.6: Exercises
5: Analysis Theorems and Techniques
5.1: Introduction
5.2: Source Conversions
5.3: Superposition Theorem
5.4: Thévenin's and Norton's Theorems
5.5: Maximum Power Transfer Theorem
5.6: Delta-Y (Pi-T) Conversions
5.7: Summary
5.8: Exercises
6: Nodal and Mesh Analysis
6.1: Introduction
6.2: Nodal Analysis
6.3: Mesh Analysis
6.4: Dependent Sources
6.5: Summary
6.6: Exercises
7: AC Power
7.1: Introduction
7.2: Power Waveforms
7.3: Power Triangle
7.4: Power Systems
7.5: Summary
7.6: Exercises
8: Resonance
8.1: Introduction
8.2: Series Resonance
8.3: Parallel Resonance
8.4: Summary
8.5: Exercises
9: Polyphase Power
9.1: Introduction to Polyphase Power
9.2: Polyphase Definition
9.3: Three-Phase Connections
9.4: Power Factor Correction
9.5: Summary
9.6: Exercises
AC Electrical Circuit Analysis: A Practical Approach (Fiore)

C

complex numbers
1.4: Complex Numbers

P

parallel impedance
3.3: Parallel Impedance
power factor correction
9.4: Power Factor Correction

S

susceptance
3.3: Parallel Impedance

This page titled Index is shared under a CC BY-NC-SA 4.0 license and was authored, remixed, and/or curated by James M. Fiore via source content that was edited to the style and standards of the LibreTexts platform.

GLOSSARY

S

Sample Word 1 | Sample Definition 1

This page titled Glossary is shared under a license and was authored, remixed, and/or curated by LibreTexts.

DETAILED LICENSING

Overview

Title: AC Electrical Circuit Analysis: A Practical Approach (Fiore)

Webpages: 85

Applicable Restrictions: Noncommercial

All licenses found:

- CC BY-NC-SA 4.0: 94.1% (80 pages)
- Undeclared: 5.9% (5 pages)

By Page

- AC Electrical Circuit Analysis: A Practical Approach (Fiore) - *CC BY-NC-SA 4.0*
  - Front Matter - *CC BY-NC-SA 4.0*
    - TitlePage - *CC BY-NC-SA 4.0*
    - InfoPage - *CC BY-NC-SA 4.0*
    - Table of Contents - *Undeclared*
    - Licensing - *Undeclared*
    - Introduction - *Undeclared*
  - 1: Fundamentals - *CC BY-NC-SA 4.0*
    - 1.1: Introduction - *CC BY-NC-SA 4.0*
    - 1.2: Sinusoidal Waveforms - *CC BY-NC-SA 4.0*
    - 1.3: Basic Fourier Analysis - *CC BY-NC-SA 4.0*
    - 1.4: Complex Numbers - *CC BY-NC-SA 4.0*
    - 1.5: Reactance and Impedance - *CC BY-NC-SA 4.0*
    - 1.6: Phasor Diagrams - *CC BY-NC-SA 4.0*
    - 1.7: Summary - *CC BY-NC-SA 4.0*
    - 1.8: Exercises - *CC BY-NC-SA 4.0*
  - 2: Series RLC Circuits - *CC BY-NC-SA 4.0*
    - 2.1: Introduction - *CC BY-NC-SA 4.0*
    - 2.2: The Series Connection - *CC BY-NC-SA 4.0*
    - 2.3: Series Impedance - *CC BY-NC-SA 4.0*
    - 2.4: Series Circuit Analysis - *CC BY-NC-SA 4.0*
    - 2.5: Concerning Practical Inductors - *CC BY-NC-SA 4.0*
    - 2.6: Summary - *CC BY-NC-SA 4.0*
    - 2.7: Exercises - *CC BY-NC-SA 4.0*
  - 3: Parallel RLC Circuits - *CC BY-NC-SA 4.0*
    - 3.1: Introduction - *CC BY-NC-SA 4.0*
    - 3.2: The Parallel Connection - *CC BY-NC-SA 4.0*
    - 3.3: Parallel Impedance - *CC BY-NC-SA 4.0*
    - 3.4: Parallel Circuit Analysis - *CC BY-NC-SA 4.0*
    - 3.5: Summary - *CC BY-NC-SA 4.0*
    - 3.6: Exercises - *CC BY-NC-SA 4.0*
  - 4: Series-Parallel RLC Circuits - *CC BY-NC-SA 4.0*
    - 4.1: Introduction - *CC BY-NC-SA 4.0*
    - 4.2: The Series-Parallel Connection - *CC BY-NC-SA 4.0*
    - 4.3: Series-Parallel Impedance - *CC BY-NC-SA 4.0*
    - 4.4: Series-Parallel Circuit Analysis - *CC BY-NC-SA 4.0*
    - 4.5: Summary - *CC BY-NC-SA 4.0*
    - 4.6: Exercises - *CC BY-NC-SA 4.0*
  - 5: Analysis Theorems and Techniques - *CC BY-NC-SA 4.0*
    - 5.1: Introduction - *CC BY-NC-SA 4.0*
    - 5.2: Source Conversions - *CC BY-NC-SA 4.0*
    - 5.3: Superposition Theorem - *CC BY-NC-SA 4.0*
    - 5.4: Thévenin's and Norton's Theorems - *CC BY-NC-SA 4.0*
    - 5.5: Maximum Power Transfer Theorem - *CC BY-NC-SA 4.0*
    - 5.6: Delta-Y (Pi-T) Conversions - *CC BY-NC-SA 4.0*
    - 5.7: Summary - *CC BY-NC-SA 4.0*
    - 5.8: Exercises - *CC BY-NC-SA 4.0*
  - 6: Nodal and Mesh Analysis - *CC BY-NC-SA 4.0*
    - 6.1: Introduction - *CC BY-NC-SA 4.0*
    - 6.2: Nodal Analysis - *CC BY-NC-SA 4.0*
    - 6.3: Mesh Analysis - *CC BY-NC-SA 4.0*
    - 6.4: Dependent Sources - *CC BY-NC-SA 4.0*
    - 6.5: Summary - *CC BY-NC-SA 4.0*
    - 6.6: Exercises - *CC BY-NC-SA 4.0*
  - 7: AC Power - *CC BY-NC-SA 4.0*
    - 7.1: Introduction - *CC BY-NC-SA 4.0*
    - 7.2: Power Waveforms - *CC BY-NC-SA 4.0*
    - 7.3: Power Triangle - *CC BY-NC-SA 4.0*
    - 7.4: Power Systems - *CC BY-NC-SA 4.0*
    - 7.5: Summary - *CC BY-NC-SA 4.0*
    - 7.6: Exercises - *CC BY-NC-SA 4.0*
  - 8: Resonance - *CC BY-NC-SA 4.0*
    - 8.1: Introduction - *CC BY-NC-SA 4.0*
    - 8.2: Series Resonance - *CC BY-NC-SA 4.0*
    - 8.3: Parallel Resonance - *CC BY-NC-SA 4.0*
    - 8.4: Summary - *CC BY-NC-SA 4.0*

- 8.5: Exercises - *CC BY-NC-SA 4.0*
- 9: Polyphase Power - *CC BY-NC-SA 4.0*
  - 9.1: Introduction to Polyphase Power - *CC BY-NC-SA 4.0*
  - 9.2: Polyphase Definition - *CC BY-NC-SA 4.0*
  - 9.3: Three-Phase Connections - *CC BY-NC-SA 4.0*
  - 9.4: Power Factor Correction - *CC BY-NC-SA 4.0*
  - 9.5: Summary - *CC BY-NC-SA 4.0*
  - 9.6: Exercises - *CC BY-NC-SA 4.0*
- 10: Decibels and Bode Plots - *CC BY-NC-SA 4.0*
  - 10.1: Introduction - *CC BY-NC-SA 4.0*
  - 10.2: The Decibel - *CC BY-NC-SA 4.0*
  - 10.3: Bode Plots - *CC BY-NC-SA 4.0*
  - 10.4: Combining the Elements - Multi-Stage Effects - *CC BY-NC-SA 4.0*
  - 10.5: Summary - *CC BY-NC-SA 4.0*
  - 10.6: Exercises - *CC BY-NC-SA 4.0*
- Back Matter - *CC BY-NC-SA 4.0*
  - Index - *CC BY-NC-SA 4.0*
  - Glossary - *Undeclared*
  - Detailed Licensing - *Undeclared*

This page titled AC Electrical Circuit Analysis: A Practical Approach (Fiore) is shared under a CC BY-NC-SA 4.0 license and was authored, remixed, and/or curated by James M. Fiore via source content that was edited to the style and standards of the LibreTexts platform.