DC ELECTRICAL CIRCUIT ANALYSIS - A PRACTICAL APPROACH

James M. Fiore
Mohawk Valley Community College

LibreTexts™

Default Text

This text is disseminated via the Open Education Resource (OER) LibreTexts Project (https://LibreTexts.org) and like the thousands of other texts available within this powerful platform, it is freely available for reading, printing, and "consuming."

The LibreTexts mission is to bring together students, faculty, and scholars in a collaborative effort to provide an accessible, and comprehensive platform that empowers our community to develop, curate, adapt, and adopt openly licensed resources and technologies; through these efforts we can reduce the financial burden born from traditional educational resource costs, ensuring education is more accessible for students and communities worldwide.

Most, but not all, pages in the library have licenses that may allow individuals to make changes, save, and print this book. Carefully consult the applicable license(s) before pursuing such effects. Instructors can adopt existing LibreTexts texts or Remix them to quickly build course-specific resources to meet the needs of their students. Unlike traditional textbooks, LibreTexts' web based origins allow powerful integration of advanced features and new technologies to support learning.

LibreTexts is the adaptable, user-friendly non-profit open education resource platform that educators trust for creating, customizing, and sharing accessible, interactive textbooks, adaptive homework, and ancillary materials. We collaborate with individuals and organizations to champion open education initiatives, support institutional publishing programs, drive curriculum development projects, and more.

The LibreTexts libraries are Powered by NICE CXone Expert and was supported by the Department of Education Open Textbook Pilot Project, the California Education Learning Lab, the UC Davis Office of the Provost, the UC Davis Library, the California State University Affordable Learning Solutions Program, and Merlot. This material is based upon work supported by the National Science Foundation under Grant No. 1246120, 1525057, and 1413739.

Any opinions, findings, and conclusions or recommendations expressed in this material are those of the author(s) and do not necessarily reflect the views of the National Science Foundation nor the US Department of Education.

Have questions or comments? For information about adoptions or adaptions contact info@LibreTexts.org or visit our main website at https://LibreTexts.org.

The LibreTexts name, logo, and book covers are trademarked by LibreTexts, Inc. (a 501(c)(3) not-for-profit organization) and protected against unauthorized use.

This text was compiled on 08/26/2026

TABLE OF CONTENTS

Licensing

1: Fundamentals

1.1: Introduction

1.2: Significant Digits and Resolution

1.3: Scientific and Engineering Notation

1.4: The Metric System

1.5: The Scientific Method

1.6: Critical Thinking

1.7: RoHS

1.8: Summary

1.9: Exercises

2: Basic Quantities

2.1: Introduction

2.2: An Atomic Model

2.3: Charge and Current

2.4: Energy and Voltage

2.5: Power and Efficiency

2.6: Energy Cost and Battery Life

2.7: Resistance and Conductance

2.8: Instrumentation and Laboratory

2.9: Summary

2.10: Exercises

3: Series Resistive Circuits

3.1: Introduction

3.2: Conventional Current Flow and Electron Flow

3.3: The Series Connection

3.4: Combining Series Components

3.5: Ohm's Law

3.6: Kirchhoff's Voltage Law

3.7: Series Analysis

3.8: Potentiometers and Rheostats

3.9: Summary

3.10: Exercises

4: Parallel Resistive Circuits

4.1: Introduction

4.2: The Parallel Connection

4.3: Combining Parallel Components
4.4: Kirchhoff's Current Law
4.5: Parallel Analysis
4.6: Current Limiting - Fuses and Circuit Breakers
4.7: Summary
4.8: Exercises

5: Series-Parallel Resistive Circuits
5.1: Introduction
5.2: Series-Parallel Connections
5.3: Simplifying Series-Parallel Components
5.4: Series-Parallel Analysis
5.5: Summary
5.6: Exercises

6: Analysis Theorems and Techniques
6.1: Introduction
6.2: Source Conversions
6.3: Superposition Theorem
6.4: Thévenin's Theorem
6.5: Norton's Theorem
6.6: Maximum Power Transfer Theorem
6.7: Delta-Y Conversions
6.8: Summary
6.9: Exercises

7: Nodal and Mesh Analysis, Dependent Sources
7.1: Introduction
7.2: Nodal Analysis
7.3: Mesh Analysis
7.4: Dependent Sources
7.5: Summary
7.6: Exercises

8: Capacitors
8.1: Introduction
8.2: Capacitance and Capacitors
8.3: Initial and Steady-State Analysis of RC Circuits
8.4: Transient Response of RC Circuits
8.5: Summary
8.6: Exercises

9: Inductors
9.1: Introduction

9.2: Inductance and Inductors
9.3: Initial and Steady-State Analysis of RL Circuits
9.4: Initial and Steady-State Analysis of RLC Circuits
9.5: Transient Response of RL Circuits
9.6: Summary
9.7: Exercises

10: Magnetic Circuits and Transformers

10.1: Introduction
10.2: Electromagnetic Induction
10.3: Magnetic Circuits
10.4: Transformers
10.5: Summary
10.6: Exercises

Index

Glossary

Detailed Licensing

This page titled DC Electrical Circuit Analysis - A Practical Approach (Fiore) is shared under a CC BY-NC-SA 4.0 license and was authored, remixed, and/or curated by James M. Fiore via source content that was edited to the style and standards of the LibreTexts platform.

Licensing

A detailed breakdown of this resource's licensing can be found in ***Back Matter/Detailed Licensing***.

This page titled Licensing is shared under a license and was authored, remixed, and/or curated by LibreTexts.

1: FUNDAMENTALS

Learning Objectives

After completing this chapter, you should be able to:

- Describe significant digits and resolution.
- Express and compute numeric values using scientific and engineering notation.
- Describe the metric system and detail its advantages.
- Define the scientific method.
- Give examples of cognitive biases and logical fallacies that affect critical thinking.
- Describe the RoHS directive.

1.1: Introduction

1.2: Significant Digits and Resolution

1.3: Scientific and Engineering Notation

1.4: The Metric System

1.5: The Scientific Method

1.6: Critical Thinking

1.7: RoHS

1.8: Summary

1.9: Exercises

This page titled 1: Fundamentals is shared under a CC BY-NC-SA 4.0 license and was authored, remixed, and/or curated by James M. Fiore via source content that was edited to the style and standards of the LibreTexts platform.

1.1: Introduction

Little Background and Perspective

This text focuses on the analysis of DC (direct current) electrical circuits. It assumes no prior knowledge of electrical quantities, systems or circuit theory. As with any new endeavor, it is important to define the terminology and tools to be used at the outset. We shall be examining the basic electrical quantities, their relationships, proper terminology, and a variety of analysis techniques and theorems that have broad application in the field. In this regard, our analytical “tools” are the appropriate mathematics and standards, and the scientific method, which are detailed in this chapter. The definition of specific electrical quantities and their relationships begins in Chapter Two. Various analysis techniques and theorems are detailed in subsequent chapters.

The initial research into electricity occurred in the late eighteenth and early nineteenth centuries by individuals such as Alessandro Volta, André-Marie Ampère, Michael Faraday and Georg Ohm. This work was expanded later in the nineteenth century by Gustav Kirchhoff, James Clerk Maxwell, Léon Charles Thévenin and others. The late 1800s and early 1900s saw the practical application of electrical theory to solve practical problems (i.e., the field of electrical engineering). Perhaps the two names most associated with this period are Thomas Edison and Nikola Tesla. Numerous other individuals made contributions as well, eventually leading to the age of electronics, fully coming into its own by the mid-twentieth century with the introduction of solid state devices such as the bipolar junction transistor. The pace of these developments has been quite rapid. For example, a little over a century ago the average person did not have ready access to something as simple as a modern flashlight. To put this into perspective, if we were to scale all of human history from the emergence of modern homo sapiens to today into a single year; radio, television, digital computers and all the rest would show up only within the last couple of hours before midnight on the last day of the year.

At this point we need to distinguish between electricity and electronics. The term electricity tends to refer to the general relationships between electrical quantities such as voltage and current. In practical use, an electrical system tends to refer to a system where electrical energy is used directly to perform some manner of physical work. Examples include commercial and residential wiring systems for lighting, heating and the like. Electrical power generation and transmission would normally fall into this category, such as the high voltage transmission line seen in Figure 1.1.1 .

Figure 1.1.1 : 345,000 volt transmission lines.

In contrast, electronic systems, or simply electronics, tends to refer to systems where electrical signals are used to represent, store and/or manipulate some kind of information. This runs the gamut from radio and television to computing devices, cell phones, non-acoustic musical instruments, etc. Some of these applications may be obvious, where the individual interacts directly with the device such as a cell phone or tablet. On the other hand, the human interaction may be minimal such as with the engine management system of a modern car. A good example of a modern device packed with electronics is the DSLR, or Digital Single Lens Reflex camera. These devices include numerous electronic sensors and actuators to adjust to ambient light, for automatic focus, and the like. An example is shown in Figure 1.1.2 . The usage and scale of power transmission lines versus digital cameras may seem to be wildly separated but, ultimately, they are both made possible by the application of the basic laws of electrical circuit theory.

Figure 1.1.2 : A digital SLR camera.

Another good example of the shear scale of difference is to look at a single electrical device such as a DC motor. Figure 1.1.3 shows a simple DC hobby motor, the kind of device that might be used for a motorized toy. This device runs on 12 volts, as available from a battery, and draws only a few hundredths of an amp of current (to put this in perspective, the typical old-fashioned incandescent light bulb draws between one half and one amp of current from a 120 volt socket).

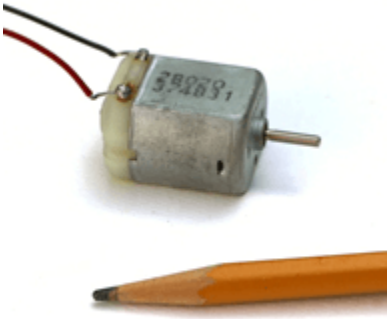

Figure 1.1.3 : A DC hobby motor

Compare this to the industrial DC motor seen in Figure 1.1.4 . This is a 4000 horsepower motor used to reduce eight inch thick copper slabs down to 1/2 inch thickness. It draws 4680 amps maximum at 700 volts. It clearly dwarfs the technician standing nearby.

Figure 1.1.4 : An industrial DC motor

Now that we have a little background and perspective, it's time to look at mathematics, specifically, how we represent and manipulate values that may be very, very large or very, very small, all while keeping appropriate accuracy.

This page titled 1.1: Introduction is shared under a CC BY-NC-SA 4.0 license and was authored, remixed, and/or curated by James M. Fiore via source content that was edited to the style and standards of the LibreTexts platform.

1.2: Significant Digits and Resolution

A key element of any measurement or derived value is the resulting resolution. Resolution refers to the finest change or variation that can be discerned by a measurement system. For digital measurement systems, this is typically the last or lowest level digit displayed. For example, a bathroom scale may show weights in whole pounds. Thus, one pound would be the resolution of the measurement. Even if the scale was otherwise perfectly accurate, we could not be assured of a person's weight to within better than one pound using this scale as there is no way of indicating fractions of a pound.

Related to resolution is a value's number of significant digits. Significant digits can be thought of as representing potential percentage accuracy in measurement or computation. Continuing with the bathroom scale example, consider what happens when weighing a 156 pound adult versus a small child of 23 pounds. As the scale only resolves to one pound, that presents us with an uncertainty of one pound out of 156 for the adult, but a much larger uncertainty of one pound out of 23 for the child. The 156 pound measurement has three significant digits (i.e., units, tens and hundreds) while the 23 pound measurement has but two significant digits (units and tens).

In general, leading and trailing zeroes are not considered significant. For example, the value 173.58 has five significant digits while the value 0.00143 has only three significant digits (the “143” portion) as does 0.000000143. Similarly, if we compute the value 63/3.0, we arrive at 21, with two significant digits. If your calculator shows 21.0 or 21.00, those extra trailing zeroes do not increase accuracy and are not considered significant. An exception to this rule is when measuring values in the laboratory. If a high resolution voltmeter indicates a value of, say, 120.0 volts, those last two zeroes are considered significant in that they reflect the resolution of the measurement (i.e, the meter is capable of reading down to tenths of volts).

When performing calculations, the results will generally be no more accurate than the accuracy of the initial measurements. Consequently, it is senseless to divide two measured values obtained with three significant digits and report the result with ten significant digits, even if that's what shows up on the calculator. The same would be true for multiplication. For these sorts of calculations, we can't expect the result to be any better than the “weakest link” in terms of resolution and resulting significant digits. For example, consider the value 3.5 divided by 2.3. Both of these values have two significant digits. Using a standard calculator, we find an answer of 1.52173913. The result has nine significant digits implying much greater accuracy and resolution than we started with, and thus is misleading. To two significant digits, the answer would be rounded to 1.5. On a long chain of calculations it may be advisable to round the intermediate results to a further digit and then round the final answer as indicated previously. This will help to mitigate accumulated errors.

When it comes to addition and subtraction, the larger value will tend to indicate the number of significant digits available, particularly in the laboratory. This is due to the resolution of the measurement (that is, its finest digit). For example, suppose we have to add two distances. We drive a car from a parking lot to its exit, a distance we record with a tape measure as being 51.17 feet. We then drive from the exit to the next city, which the car's odometer records as being 60.0 miles. Is it fair to say the total distance is 60 miles plus 51.17 feet? No, it is not. Why? Because we cannot expect the car's odometer to be accurate to within 0.01 feet, like the tape measure. In fact, the odometer is reading out a value with one-tenth mile resolution. One-tenth of a mile is 528 feet, or more than ten times the entire measurement given by the tape. We would simply ignore the tape measurement because it is smaller than the resolution of the odometer. The proper result is 60.0 miles. Now in contrast, if the tape measure had indicated 552.7 feet, or slightly more than 0.1 miles, we could safely say the total distance was 60.1 miles, rounding the result to finest resolution digit of the more coarsely measured value. Of course, this example is a bit contrived but it is designed to show the limitations of measurement devices. It is also complicated by the fact that we are using using USA customary unit (miles, feet), complete with their odd conversion factors. Fortunately, virtually all current work in science and technology uses the much simpler metric system, which we will be examining shortly.

Interactive Summary Builder

This interactive element is not available in this format. Visit the link or scan the QR code to access it online.

View this Interactive Content online

Example 1.2.1

Determine the number of significant digits in the following values.

A. 12.6

B. 0.0034

C. 43.001

D. 5400

Answers:

A. All three digits are significant.

B. Two. Only the 3 and 4 count because leading zeroes are not significant.

C. Five. Embedded zeroes are significant.

D. Two. Trailing zeroes are not generally considered significant.

Example 1.2.2

Perform the following computations, leaving the answer with the appropriate number of significant digits.

A. $55 \cdot 10.1$

B. 2312.5 / 16.2

C. 1756.2 + 345.1

D. 750.2 – 0.004

Answers:

A. 555.5 which rounds to 560 (55 has only two significant digits).

B. 142.7469136... which rounds to 143 (16.2 has three significant digits).

C. 2101.3 (both values have resolution to tenths place).

D. 750.2 (do not extend the answer beyond the more coarse resolution of tenths place).

Summary

- Leading zeros are not significant
- Trailing zeros are usually not significant, but can be when higher resolution measuring equipment provides trailing zeros in the measurement
- All non-zero digits are significant and all zero digits between non-zero digits are significant
- When multiplying and dividing, the value with the least number of significant digits indicates the number of significant digits in the result
- When adding and subtracting, the value with the least resolution (i.e., the most coarse) will set the limit of resolution in the result

This page titled 1.2: Significant Digits and Resolution is shared under a CC BY-NC-SA 4.0 license and was authored, remixed, and/or curated by James M. Fiore via source content that was edited to the style and standards of the LibreTexts platform.

1.3: Scientific and Engineering Notation

Scientific and engineering notations are ways to express numbers without a lot of trailing or leading zeroes. They also simplify calculations. Before going any further, it would be a good idea to obtain a proper scientific calculator, such as the ones shown in Figure 1.3.1 . The simplest can be had for $10 to $20, while more powerful graphing types will run ten times as much (although good buys can often be found on the used market). Some of the brands to consider are Casio, Sharp and Texas Instruments. If you plan to continue study into AC electrical circuits, it would be wise to make sure the calculator can solve simultaneous equations with complex coefficients.

Figure 1.3.1 : Scientific calculators.

The idea behind scientific notation is to represent the value in two parts: a precision portion, or mantissa; and the magnitude, a power of ten called the exponent. The representation looks like this (m is the mantissa and e is the exponent)

$$m \times 10^n$$

- Thus, 360, which is 3.6×100, can be written as 3.6×10^2, where 3.6 is the mantissa and 2 is the exponent
- Similarly, 0.00275, which is 2.75×0.001, can be written as the value 2.75×10^{-3}.

As the base of the exponent is always 10, a more compact form replaces the "$\times 10$" with "E". Thus, these two values can be written as 3.6E2 and 2.75E−3. When adding or subtracting values in this form, the first step is to make sure that all of the values have the same exponent. Then, the precision portions are simply added together. For example:

- 3.6E2 + 1.1E2 is equal to 4.7E2.
- Similarly, 3.6E2 + 5E1 is converted as 3.6E2 + 0.5E2 yielding 4.1E2. Alternately, it can be converted as 36E1 + 5E1 yielding 41E1 (the same answer, or 410 in ordinary form).

Where this notation is particularly useful is when multiplying or dividing. For multiplying, multiply the mantissas and add the exponents. For dividing, divide the mantissas and subtract the exponents. For example, multiply 20000 by 360000. This is equivalent to 2E4 times 3.6E5. The result is 7.2E9 (i.e., 7200000000). Similarly, dividing the value 0.006 by 50000 yields 6E−3 divided by 5E4, or 1.2E−7 (or in ordinary form 0.00000012). Notice the cumbersome and error-prone quantities of trailing and leading zeroes in these examples when using ordinary form. With scientific notation, we no longer have to deal with them.

Example 1.3.1

Convert the following numbers into normalized scientific notation

a. 2100
b. 0.005
c. 32,000,000
d. 0.0000741

Answer a available at the end of this section.

Engineering notation is similar to scientific notation with the caveat that the exponent must by a multiple of 3. Thus, 390000

would be written as either 390E3 or possibly as 0.39E6. Each multiple of 3 has a name and abbreviating letter to make the written representation even more compact. You are probably already familiar with many of them. For example, 10^3 or 1000, is kilo which is abbreviated as k. Also, 10^6, or one million, is Mega, and abbreviated M (note capital letter).

Table 1.3.1 : Common engineering notation prefixes and abbreviations.

Exponent	Name	Abbreviation
12	Tera	T
9	Giga	G
6	Mega	M
3	kilo	k
-3	milli	m (note lower case)
-6	micro	μ (Greek letter mu)
-9	nano	n
-12	pico	p

A partial list of exponents, their names, and abbreviations is shown in Table 1.3.1 . There are standards for both larger and smaller exponents, but this table is something that should be committed to memory as they are in wide use.

Example 1.3.1

Convert the following into engineering notation using appropriate prefixes.

a. 2100 grams
b. 0.005 meters
c. 32,000,000 bits per second (bps)
d. 0.0000741 seconds

Answer a available at the end of this section.

Notice that the final answers are much more compact and less error prone.

After some initial effort, certain common shortcuts will become second nature. For example (and keeping it generic), micro times kilo will yield milli (i.e., millionths times thousands yields thousandths). Similarly, the reciprocal of kilo is milli and the reciprocal of micro is Mega. Further, milli divided by kilo yields micro, Mega divided by kilo yields kilo, and so on. Gaining facility with these kinds of shortcuts will allow you to make estimates in your head very quickly, a much desired skill.

Answers

2.1×10^3
5×10^-3
3.2×10^7
7.4×10^-5

2.1 kilograms (2.1 kg)
5 millimeters (5 mm)
32 Megabits per second (32 Mbps)
74.1 microseconds (74.1 μs)

This page titled 1.3: Scientific and Engineering Notation is shared under a CC BY-NC-SA 4.0 license and was authored, remixed, and/or curated by James M. Fiore via source content that was edited to the style and standards of the LibreTexts platform.

1.4: The Metric System

In order to make consistent measurements of physical phenomena, some system of measurement needs to be standardized. While almost any scheme can be made to work, some systems are more logical and easier to deal with than others. The current standard in the world of science and technology is the metric system, or more properly, the International System of Units (abbreviated SI, from the French Système International). This standard has found wide adoption across the globe and is the system used by roughly 95% of the human population. This is in contrast to the system of USA customary units which is based on a prior system of units originating in England. It should be noted that the USA, comprising some 5% of the global population, is the only country of reasonable economic power left that has not adopted the metric system for general use. This is only true in the consumer realm though as virtually all scientists, engineers and technicians in the USA routinely use the metric system[1]. Even many products built and sold in the USA use metric components internally; it's just not noticed by the consumer.

Why has the metric system seen such wide adoption compared to USA customary units? The simple answer is because it is an easier system to learn and manipulate. First, a main strength of the metric system is that everything is based on powers of ten. Second, customary units often consist of many different variations on a single parameter while the metric system uses just a single parameter. For example, consider the measurement of length. For human-size lengths we might measure something in inches or feet. If it's a bit larger we might use yards. If it's even farther, we would use miles. In the metric system there is just one unit for length and that's the meter (roughly 39.37 inches). If we want to talk about particularly small or large values we would simply add our engineering notation prefixes to come up with millimeters or kilometers for everyday conversion (although if a value happened to be particularly large or small we would say something like 2.3E9 meters).

But customary units complicate the system even more because the various versions of a parameter are usually not based on a power of ten. For example, there are 12 inches in a foot and 5280 feet in a mile. This is further complicated by the fact that there is more than one kind of mile (the common statute mile is 5280 feet but the nautical mile is roughly 6076 feet). Similarly, if we measure the weight of something we could use ounces, pounds and tons (more than one kind), and again, the conversion factors are not convenient (16 ounces to the pound, 2000 pounds to the common ton).

These odd conversion factors unnecessarily complicate matters. For example, suppose we have a length measurement of 2 feet, 8 1/2 inches and we need to multiply this by a factor of 3. Multiplying each part by three yields 6 feet, 25 1/2 inches, but that needs to be simplified to 8 feet, 1 1/2 inches. This extra step can be avoided if we base everything on powers of ten.

For individuals only familiar with USA customary units, the ease of the metric system can be illustrated with currency. USA currency is, in effect, metric: 100 cents make up one dollar. Simply imagine how difficult it would be if, instead of cents, a dollar consisted of 13 flarkneks and 85 dollars made up a skroon. Further, imagine you decide to buy a new computer that costs 21 skroon, 10 dollars and 12 flarkneks. Now compute the total with a 6.5% local tax rate. Will 22 skroon be enough? What's the change? Ouch! It's not impossible but it's extra error prone work. That's precisely the issue with feet, miles, ounces, pounds, pints, gallons and so on.

In the metric system typically we use the MKS variation: $m$eters for length or distance, $k$ilograms for mass and $s$econds for time. Further, we typically use liters for volume (liquid measure) and Celsius (AKA Centigrade) for temperature, although it is sometimes more convenient to use the absolute temperature scale of kelvin. Fortunately, the thermal energy indicated by a one degree Celsius change is identical to that for kelvin. The two schemes only differ in their zero reference point (absolute zero for kelvin and the point at which water freezes for Celsius).

As virtually all of the calculations presented in this text are metric, there is little need to concern ourselves with conversions back and forth between the two systems. Indeed, if the USA were to finally make the switch to metric, no one would ever need to concern themselves with conversions, with the possible exception of historians, and perhaps people trying to recreate old family recipes and the like.

Sometimes, careless people tend to think of units of measure as an afterthought. Don't get caught in this trap. Failure to pay attention to proper units can have catastrophic results. One example is the Mars Climate Orbiter. In 1999 this mission to study the planet Mars suffered a spectacular failure. A subcontractor had used USA customary units for its software which then fed values to other systems that were expecting metric/SI units (as specified in the system contract). The result was the destruction of the orbiter as it attempted orbital insertion. The cost of the mission was nearly $330 million, completely wasted.

A table of commonly used quantities, their SI units and typical equivalents is shown in Table 1.4.1 . Further details on units can be

found in Appendix E.

Table 1.4.1 : Common quantities, SI units and equivalents. Note: As a general rule, when units are abbreviated they are capitalized. When they are spelled out they are treated as common nouns and therefore not capitalized, even when named in honor of someone (an exception being some temperature scales).

Quantity (abbreviation)	Unit (abbreviation)	Approximate Equivalent
Length (l)	meter (m)	1 m $\approx$ 39.37 inches
Mass (m)	kilogram (kg)	1 kg $\approx$ 2.2 pounds (on Earth)
Time (t)	second (s)	NA
Force (F)	newton (N)	1 N $\approx$ 0.225 pound-force
Energy (w)	joule (J)	3.6E6 J $\approx$ 1 kWh
Power (P)	watt (W)	746 W $\approx$ 1 horsepower
Temperature (T)	kelvin (K) or Celsius (°C)	Fahrenheit = $32 + 9/5 \cdot$°C kelvin = °C + 273.15
Electric Charge (Q)	coulomb (C)	NA
Current (I)	amp (A)	NA
Voltage (V or E)	volt (V)	NA

References

[1]It is also true of consumers who buy soda and similar beverages that are routinely sold in metric two or three liter bottles. Go figure.

This page titled 1.4: The Metric System is shared under a CC BY-NC-SA 4.0 license and was authored, remixed, and/or curated by James M. Fiore via source content that was edited to the style and standards of the LibreTexts platform.

1.5: The Scientific Method

The scientific method is a means of uncovering and explaining physical phenomena. It relies on observation and logical reasoning to achieve insight into the actions and relations of the phenomena, and a means of relating it to similar items. The method starts with observations and measurements. Based on these and background knowledge such as mathematics, physics, the behavior of similar phenomena, and so on, a tentative explanation, or hypothesis, is derived. The hypothesis is then tested using experimental or field data. The precise nature of the tests depend on the area of study, but the idea will always be the same: namely to see if the predictions of the hypothesis are borne out under alternate applicable conditions or data sets. A proper hypothesis must be testable and falsifiable. That is, the hypothesis must be able to be proven wrong by subsequent observation. If it is not, then the hypothesis is better classified as philosophy. For example, Newtonian gravitation could be proven false by letting go of a suspended hammer and watching it remain motionless or fall upwards, rather than fall down toward the Earth. Similarly, Evolution could be proven false by the discovery of "fossil rabbits in the Precambrian", to quote famous biologist J. B. S. Haldane (Haldane was being somewhat snippy, but in general, he meant anything that would be clearly out of the expected time-line, in this case a small mammal predating even the most simple creatures with backbones).

A hypothesis is tested by repeated cycles of prediction, observation and measurement, and also subject to peer review, that is, the critique of others in the field of study who may point out inconsistencies in the explanations or logic, errors in experimental design, and so on. This cycle continues until the weight of data and scientific opinion elevates the hypothesis to a theory. One might say that a theory is a hypothesis that has withstood the rigors of the scientific method. This cycle was well expressed by the Marquise du Châtelet[1]. She explained hypotheses as "probable propositions". While it would only take one observation to falsify a hypothesis, several would be required to vindicate it: "each non-contradictory result would add to the probability of the hypothesis and ultimately...we would arrive at a point where its 'certitude' and even its 'truth', was so probable that we could not refuse our assent".

It is important to note that the scientific usage of the word theory is entirely different from its popular usage, which is perhaps closer to "hunch" or "seat-of-the-pants guess". Also, a scientific theory is not true in the same sense as a fact. Facts come in three main varieties: direct observations, indirect observations and those that may be logically deduced. A direct observation is something that you have measured yourself, such as noting the time it takes for a ball to reach the ground when released from a given height. An indirect observation is something that may be inferred from other known quantities or proper historical data, such as "George Washington was the first president of the United States of America". An example of the third variety would be "If x is an even integer larger than four and smaller than eight, then x must be six". At first glance, it may seem that facts are highest on the pecking order, but scientific theories are much more useful than facts because isolated facts have very little predictive capacity. It is the predictive and explanatory ability of theories that make them so powerful.

Consider the following. Suppose you hold out a stone at arm's length and let go. It drops to the ground. That's a fact. You saw it happen. Unfortunately, by itself, it doesn't tell you very much. Suppose you repeat this several times and each time the stone drops in precisely the same way as it did initially. This is beginning to get useful because you're noticing a pattern, and patterns can be predictive. Now, suppose you pick up stones of differing sizes, say 100 grams, 200 grams, half a kilogram and a kilogram, and drop each of them in turn. You observe that they each hit the ground in the same amount of time. Further, you drop them from different heights and you notice that the higher up they are, the longer it takes for them to hit the ground, but they all take the same amount of time to reach the ground.

You might now formulate a hypothesis: namely that the mass of a stone doesn't have an effect on how fast it falls from a given height and that height and fall time are directly related. Your hypothesis is predictive. Although you used only four sizes of stones and a few heights, your broadened hypothesis should apply to any stone dropped from any height. So now you (and a bunch friends) starting picking up random pairs of stones and drop them from random heights, and sure enough, you see the same effect again and again. If you do this enough and it is continually verified without exception, you might even make a "law of falling stones", particularly if you were able to quantify the times and heights through careful measurement and reduce the relation to a nice formula. It is useful because you can now predict what will happen with any stone dropped from any height. But this law is rather limited. It only applies to stones because you may have noticed that stones drop much faster than pieces of cork. While you might then proceed to make a "law of falling cork", that would unnecessarily complicate things. Instead, you could take a step back and try to figure out why stones and cork both fall, but not at the same rate. Eventually, you might discover that the difference has to do with air friction and you can now create a law governing falling bodies in a frictionless environment. That's even more useful than the original "law of falling stones".

But even this new and improved "law of falling bodies" doesn't offer a lot of insight into what is really going on in the larger

scheme of things. Through repeated observations and experiments this could be extended to cover not just falling bodies on the Earth, but the interactions between any bodies, including falling stones and cork on the moon, or the interaction between the Earth and the Sun, the Sun and the other planets, the Sun and other stars, and so on. What you'll have arrived at is a full-blown theory of gravitation (Newtonian gravitation). Now that is an extremely useful tool. It helps us design airplanes, get satellites into orbit, even get people to the moon and back safely.

Thus a theory is a "best estimate so far", a model to explain some observable aspect of the universe. It is understood that as our view of what is observable widens and our knowledge extends, so too a given theory may be refined. The Newtonian gravitation model was sufficient to describe the movements of the planets around the sun and is still used to plan the flight of spacecraft. In the early 1900's, however, Einstein's Theory of Relativity refined Newtonian Gravitation to include more extreme (relativistic) effects. It is important to note that we did not "throw out" Newton's equations; rather, we now have a better understanding of the set of conditions under which they apply. While this trek towards more and more refinement is not truth in and of itself, to paraphrase the late Harvard paleontologist, Stephen Jay Gould, to ignore the weight of scientific data behind an established theory would be perverse.

References

[1]Du Châtelet was that most rare of 18th century women: a mathematician and physicist. She translated Newton's Principia Mathematica into French and was a companion of Voltaire. Unfortunately, after an affair with the poet Jean François de Saint-Lambert in her early 40's, she became pregnant and died six days after giving birth.

This page titled 1.5: The Scientific Method is shared under a CC BY-NC-SA 4.0 license and was authored, remixed, and/or curated by James M. Fiore via source content that was edited to the style and standards of the LibreTexts platform.

1.6: Critical Thinking

As humans, we need to recognize that we are fallible. No matter how good our intentions, we make mistakes and can be fooled. The first step toward reducing and ultimately eliminating these sources of error is to understand them. We will lump these into two broad categories: cognitive bias and logical fallacies. Understanding these will enhance our ability to think critically and avoid being fooled (or fooling ourselves).

Cognitive Bias

A cognitive bias is an inclination toward looking at a situation in an unbalanced or unfair manner. Generally, people are not aware of these biases. One example is confirmation bias (AKA, confirmation of expected outcomes). That is, we expect (or hope) to see a certain result and thus we tend to overvalue evidence that confirms it while discounting evidence that contradicts it. One way to avoid this is through the use of a double-blind test. Suppose we wish to test a new drug to see if it is effective and safe. As we may have invested a lot of time and money developing the drug, it is only natural that we want it to work, and this may skew our analysis (unintentionally, of course). What we do is have a third party create two sets of pills; one is the drug under test and the other is a placebo (it looks like the other pill but does nothing). These sets are identified using codes known only to the third party. The sets are then given to the researchers who, in turn, give them to the patients. The important thing is that neither the patients nor the researchers know which pills are which. When the trial has run its course, the researchers (us) analyze the data to determine if any set of pills was successful. Only after the analysis is completed does the third party tell the researchers which set was real and which set was the placebo.

Another cognitive bias is the Dunning-Kruger effect, named after the two social psychologists who studied it. This states that the knowledge needed to determine if someone is competent in a certain field is competence in that same field. Thus, individuals who have low competence are not in a position to accurately evaluate their own level of competence. Consequently, these individuals often over estimate their competence. This is known as illusory superiority. To put it crudely, these individuals are too ignorant of the subject to understand just how ignorant they are. Among the highly competent, two other effects may be seen. First, the advanced individual may be keenly aware of any shortcomings or gaps in their competence and may undervalue their level as a result. Second, they may assume that their level of competence is typical, and that most people are therefore “at their level”.

It is useful to remember that in our complex and interdependent society, no one can be an expert at everything, or even at most things. Instead, it is likely that we are all largely ignorant of a majority of subjects and/or incompetent at a variety of skills.

Logical Fallacies

Logical fallacies represent faulty reasoning. They are “thinking traps” that people sometimes fall into. Familiarity with them will help reduce their occurrence. There are dozens of logical fallacies but we shall only investigate a representative few.

To help explain the process, we'll begin with a syllogism. This is, in essence, a simple argument. It starts with a major premise (a generalization) which is followed by a minor premise (a more specific statement). From these, we derive a conclusion. For example:

$$\text{All humans breathe air. (major premise)}$$

$$\text{Alice is a human. (minor premise)}$$

$$\text{Therefore, Alice breathes air. (conclusion)}$$

Errors can occur when either premise is false or when the conclusion does not follow (the latter being referred to as a non-sequitur). For example:

$$\text{All fish live in water.}$$

$$\text{Lobsters live in water.}$$

$$\text{Therefore, lobsters are fish.}$$

The problem with this is the linkage between the major and minor premises. Saying “all fish live in water” does not preclude something else (like a lobster or a sea snake or kelp) from living in water. Compare the prior example to this version:

All fish live in water.

Trout are fish.

Therefore, trout live in water.

While these examples may seem obvious, there are trickier versions. For example:

I am made of nothing but atoms.

Atoms are not alive.

Therefore, I am not alive.

Nope. Doesn't work. This error is called the fallacy of composition. Basically, it says that what is true of the parts must be true of the whole, and vice versa. It ignores the concept of emergent properties (consider the behavior of a single bird to a flock, or a single fish to a school).

The fallacy of composition can be illustrated without using a syllogism. Suppose you are in a crowded movie theater. If you stand up, you will have a better view of the screen. In contrast, it is not true that if everyone stands up, everyone will have a better view. In fact, everyone will most likely have a worse view. If one person stands, they are unique. That unique character is lost when everyone stands.

Turning to a different fallacy, the Latin phrase post hoc ergo propter hoc can be translated as “Before this, therefore because of this”. This fallacy is sometimes referred to as the post hoc fallacy or the causation fallacy. It is an error regarding causality; the assumption being that because event A occurred before event B, then event A must have caused event B. On the surface, it seems logical enough. For example, you might see a lightning strike and then hear a clap of thunder. It seems reasonable to assume that the lightning caused the thunder (generally speaking, that is the case). On the other hand, you might wake up some morning when it's dark outside. Shortly thereafter, the sun rises. Obviously, your waking did not cause the sun to rise.

Another error involves proportional contribution to an outcome. Relative size is mistakenly seen as a determiner. That is, the error assumes that only large contributors have any sway in the outcome. Basically, this fallacy proposes that if something makes up only a small percentage of the total, then its effect must be minimal. This is easily proven wrong. As an example, the atmosphere of the Earth is comprised largely of nitrogen (78%) and oxygen (21%) along with a number of trace gases such as argon, carbon dioxide and so forth. If the atmosphere was suddenly altered so that it included just 0.1% hydrogen sulfide, every human likely would be dead after their first breath of this new combination.

Along with size, there is a similar issue regarding linearity of effect. A linear function is one that can be plotted as a straight line. More to the point, if we have a linear system, then doubling an input to that system doubles its effect. To wit, if you order two pieces of pie for dessert, it will cost twice as much as one piece. The reality is that many systems do not behave in a linear fashion. Systems or relationships can be logarithmic, square law, cubic, or follow some other characteristic. For instance, the braking distance of a car does not vary linearly with its speed, it varies in accordance with the square of its speed. Therefore, if you're traveling twice as fast, it doesn't take twice as far to come to a stop, it takes four (two squared) times farther to stop. Remember this the next time you're speeding down a highway.

The next two items sometimes appear in arguments for or against a proposition. They are the excluded middle and the ad hominem. The excluded middle presents a false set of choices. Essentially, it falsely reduces the set of possible outcomes and then proceeds to disprove all but one of them. By process of elimination, the remaining outcome should be true. For example, someone might complain that a particular politician would only support a particular bill if said politician was either stupid or a communist (or a fascist, take your pick). They then show that the politician is not stupid, so by their logic the politician must be a communist. Of course, there are any number of other possible scenarios that have been excluded; for instance, the politician might have taken a hefty bribe to vote for the bill or the analysis of the bill by the complainer might be faulty.

Finally, ad hominem is a Latin term meaning “to the person”. The ad hominem attempts to disprove a point by arguing against the person making a claim, not the claim itself. For example, suppose Doug makes a claim in favor of a new theory of gravity. Fran's counterargument is that Doug is an evil person because he likes to spray paint foul words on other people's pet cats, and therefore he can't be trusted. The reality is that, in spite of his proclivity for penning feline profanity, Doug's ideas regarding gravity

might be spot on. Those ideas need to be addressed directly.

This page titled 1.6: Critical Thinking is shared under a CC BY-NC-SA 4.0 license and was authored, remixed, and/or curated by James M. Fiore via source content that was edited to the style and standards of the LibreTexts platform.

1.7: RoHS

Electrical components are not without a downside. Some devices potentially may contain hazardous substances such as toxic metals. Even if the devices are constructed and used with care, these substances can still create life cycle issues; that is, when their useful life is over, simply “throwing them away” can create environmental contamination.

In the early 2000s the European Union ratified the RoHS Directive. This stands for the Restriction of Hazardous Substances, and controls the use of several materials used in the construction of electrical and electronic systems. These materials include lead, mercury, cadmium, hexavalent chromium (used in chrome plating), and other specific chemicals such as certain flame retardants and plasticizers. The RoHS Directive specifies the amount of these materials allowed in any homogeneous material that makes up the device or product. Homogeneous materials, are, in essence, the smallest parts that could be separated mechanically. Examples would be items such as a machine screw, the toggle lever of a switch, or the magnet of a loudspeaker. Each of these items must individually meet the limits set by the directive. Most of these substances have limits of 1000 ppm (parts per million) although cadmium (used in rechargeable Ni-Cd batteries and certain light detectors) has a limit of 100 ppm.

The RoHS Directive has been updated periodically. The third variation (RoHS 3) became effective in the summer of 2019. Related to RoHS is WEEE, which stands for Waste from Electrical and Electronic Equipment. This controls the recovery and recycling of these devices. Generally, products sold in the EU market must meet the WEEE requirements. Several countries outside of the EU have adopted similar requirements including Japan, China, South Korea and Turkey. The USA has not adopted RoHS per se, however, several US states have adopted “RoHS-like” requirements, including California, Colorado and New York. With increasing environmental consciousness, it is likely that more countries will adopt similar measures.

To help electronic and electrical system designers make their products meet the RoHS requirements, electrical component manufacturers often use some manner of “RoHS compliant” logo or statement on their data sheets. There is no standard for these logos, however, a finished product will bear the standard RoHS compliance label, as shown in Figure 1.7.1 .

Figure 1.7.1 : RoHS compliance label.

This page titled 1.7: RoHS is shared under a CC BY-NC-SA 4.0 license and was authored, remixed, and/or curated by James M. Fiore via source content that was edited to the style and standards of the LibreTexts platform.

1.8: Summary

An electrical system is one that refers to the direct use of electrical energy in terms of power generation, transmission or application. In contrast, an electronic system is one that tends to use electrical signals as a means to represent, store and manipulate information.

When measuring physical quantities and in computations, care must be taken to maintain accuracy. Of particular importance are the concepts of resolution and significant digits. Resolution refers to the finest digit place that may be discerned (e.g., tenths or hundredths place). Generally, accuracy increases with the number of significant digits used to represent a value. Leading and trailing zeroes are not considered significant, the exception being trailing zeroes as reported by a measurement device such as a digital multimeter. In computations, results can be no more accurate or have greater resolution than the original values being manipulated. Thus, if the division of two values, each with three significant digits, yields a calculated result with much more than three significant digits, those extra digits only lead to a false sense of accuracy and resolution. As a general rule, the results of multiplication and division will have as many usable significant digits as the least precise of the original values. For addition and subtraction, the resolution of the result can be no greater than that of the original value with the least resolution.

Scientific and engineering notations are ways of representing values in a compact and less error prone form. They consist of two parts: a mantissa consisting of the significant digits and an exponent, or power of ten, for scaling. Engineering notation further stipulates that the exponent must be a multiple of three, and these multiples use prefix names such as kilo and milli for further simplification. When multiplying or dividing values, the mantissas are multiplied (or divided) while the exponents are added (or subtracted). For addition and subtraction the values are adjusted so that they have the same exponent and the mantissas are then added or subtracted as needed.

The metric system (or SI) is a measurement system based on powers of ten. Conversions between units of the same type are no longer necessary which simplifies computations. It is a global standard that is ubiquitous in the field of science, engineering and technology.

The scientific method is a technique used to uncover the reality behind the physical world. It begins with observations of phenomena which then lead to a tentative hypothesis. The hypothesis is tested experimentally with the results either confirming or denying the hypothesis. The process is repeated creating a feedback loop. If the hypothesis is repeatedly verified and not rejected, it may be elevated to a scientific theory. It is important during this process to be aware of logical fallacies and cognitive biases that can lead to false interpretations of the experimental results.

Finally, RoHS, or the Restriction of Hazardous Substances, is a European Union directive aimed at reducing environmental contamination by restricting the use of certain substances such as lead and mercury. RoHS has a direct impact on the construction and disposal of electrical and electronic products. Other countries and states have similar directives and restrictions in place to help protect the environment.

Review Questions

1. Describe the differences between scientific notation and engineering notation.

2. List the terms and abbreviations (i.e, words and symbols) for engineering notation from 10^{-12} through 10^{12}.

3. Give at least one advantage of the metric system over the customary/Imperial system of measurement.

4. Outline the process of the scientific method.

5. Explain the differences between a scientific theory, a hypothesis and a fact.

6. Describe at least three examples of cognitive biases and logical fallacies.

7. What is RoHS?

This page titled 1.8: Summary is shared under a CC BY-NC-SA 4.0 license and was authored, remixed, and/or curated by James M. Fiore via source content that was edited to the style and standards of the LibreTexts platform.

1.9: Exercises

Analysis

1. Round the following to four significant digits:

a) 14.5423

b) 30056

c) 76.90032

d) 0.00084754

2. Round the following to three significant digits:

a) 354.005

b) 9100.46

c) 1.0054

d) 0.000052753

3. Round the following to five significant digits:

a) 5.100237

b) 1020.765

c) 1.00540

d) 0.00004578053

4. Round the following to four significant digits:

a) 5.100237

b) 1020.765

c) 1.00540

d) 0.00004578053

5. Convert the following to scientific notation:

a) 23.61

b) 12000

c) 7632

d) 0.00509

6. Convert the following to scientific notation:

a) 4253

b) 640000000

c) 2.03

d) 0.00000658

7. Convert the following to scientific notation:

a) 41.56

b) 954000

c) 84.035

d) 0.0001632

8. Convert the following to scientific notation:

a) 11200

b) 30000000

c) 325.2

d) 0.00002504

9. Convert the following to engineering notation:

a) 12000

b) 470

c) 6.5

d) 0.00198

10. Convert the following to engineering notation:

a) 3500

b) 17.9

c) 5601000

d) 0.0000355

11. Convert the following to engineering notation:

a) 33.2

b) 313.6

c) 43000

d) 0.000076

12. Convert the following to engineering notation:

a) 0.23

b) 76.95

c) 45500

d) 0.00890

For problems 13 through 18 express the results using engineering notation without rounding or truncating.

13. Compute the following:

a) 1.2E2 times 3.0E4

b) 5.4 times 3.1E3

c) 6.01E3 times 2.0E−1

d) 5.3E9 times 4.1E−5

14. Compute the following:

a) 7.1E1 times 4.0E2

b) 2.32 times 5.6E3

c) 6.01E3 times 3.0E−2

d) 5.2E5 times 8.2E−7

15. Compute the following:

a) 8.2E1 / 4E2

b) 2.42 / 2.0E3

c) 6.09E3 / 3.0E−2

d) 9.6E5 / 3.1E−7

16. Compute the following:

a) 4.6E2 / 2.0E2

b) 2.35 / 4.0E6

c) 5.15E4 / 3.0E−3

d) 6.8E−2 / 5.0E−4

17. Compute the following:

a) 8.2E1 + 4E2

b) 2.42 + 2.0E1

c) 6.09E3 − 3.0E−2

d) 9.6E5 − 5.1E6

18. Compute the following:

a) 4.2E3 + 9E2

b) 3.53 + 4.2E−1

c) 1.05E−2 − 5.0E−2

d) 9.4E5 − 3.2E4

For problems 18 through 22 express the results using engineering notation with proper rounding to reflect the resulting resolution.

19. Compute the following:

a) 16.2 − 0.4

b) 4356 + 378

c) 0.012 − 0.005

20. Compute the following:

a) 4.5 · 43.1

b) 1201 / 23.6

c) 890.1 · 0.172

21. Compute the following:

a) 51E3 · 62.7E2

b) 6.733E2 / 1.01E−3

c) 20.12E6 / 65.6E9

22. Compute the following:

a) 17.9E3 − 10.4E6

b) 81E3 + 12E3

c) 76.0E3 + 1465

For problems 23 through 26 determine the result of the computation in SI base units (meters, kilograms, seconds) with appropriate engineering notation units (kilo, milli, etc.).

23. Determine the result of 20 meters times 0.10 kilograms in kg·m.

24. Determine the result of 34 kilometers divided by 10 millimeters.

25. Determine the resulting velocity in m/s if a distance of 3.6 meters is covered in the space of 1.2 milliseconds.

26. Determine the result of 24 μs divided by 3.0 km.

This page titled 1.9: Exercises is shared under a CC BY-NC-SA 4.0 license and was authored, remixed, and/or curated by James M. Fiore via source content that was edited to the style and standards of the LibreTexts platform.

2: BASIC QUANTITIES

Learning Objectives

After completing this chapter, you should be able to:

- Describe a basic, functional atomic model.
- Describe fundamental quantities and relations including charge, current, energy, voltage, power, resistance and conductance; and perform basic computations using them.
- Compute efficiency, energy cost, battery life and DMM accuracy.
- Utilize the resistor color code.

2.1: Introduction

2.2: An Atomic Model

2.3: Charge and Current

2.4: Energy and Voltage

2.5: Power and Efficiency

2.6: Energy Cost and Battery Life

2.7: Resistance and Conductance

2.8: Instrumentation and Laboratory

2.9: Summary

2.10: Exercises

This page titled 2: Basic Quantities is shared under a CC BY-NC-SA 4.0 license and was authored, remixed, and/or curated by James M. Fiore via source content that was edited to the style and standards of the LibreTexts platform.

2.1: Introduction

In this chapter we shall examine the major quantities of interest in electrical systems and describe their relationships. These include voltage, current, power, energy and resistance. We begin with basic definitions and proceed to example computations. We shall go beyond the theoretical and investigate practical aspects as found in electrical laboratories. This includes measurement devices and power sources, as well as various resistive devices. We shall examine batteries from a functional perspective, and perform computations regarding efficiency and cost of energy. We will also introduce some of the device symbols used to create electrical circuit schematics. This material presents the foundation upon which we will build circuit analysis techniques in subsequent chapters. Treat it accordingly.

This page titled 2.1: Introduction is shared under a CC BY-NC-SA 4.0 license and was authored, remixed, and/or curated by James M. Fiore via source content that was edited to the style and standards of the LibreTexts platform.

2.2: An Atomic Model

In order to understand electrical circuit behavior we must first define what it is that we are chasing. Ultimately, electrical circuits are all about the movement of electric charge. What do we mean by charge? To answer that question, we need to come up with a usable model of an atom, in other words, a functional description of its internal structure. To be sure, atoms are far smaller than most people imagine. There are far more atoms in a gallon of water than there are gallons of water in all of the oceans, lakes and rivers of planet Earth combined. It would be pointless to ask what an atom might “look like” because its components are all smaller than the shortest wavelengths of light that humans can see. That would be a little like asking a human what a dog whistle sounds like, when in fact it's at a pitch that's higher than humans can hear. Ultimately though, all we really need is a model to explain its observed behavior.

Perhaps the most prolific model in the popular imagination is the planetary model shown in Figure 2.2.1 , so named because it is reminiscent of simple models of our solar system. In this model, the core, or nucleus, is drawn at the center and contains positively charged protons and non-charged neutrons. Revolving around this core are negatively charged electrons, each following a nice, regular, planar path much like a planet around the sun. Unfortunately, this model is not accurate to say the least, although its popularity can sometimes lead to wildly erroneous and darkly humorous conclusions. In spite of its inaccuracy, the components (nucleus, protons, neutrons and electrons) are perfectly valid. Before we come up with a more accurate and useful model, let's take a closer look at these items.

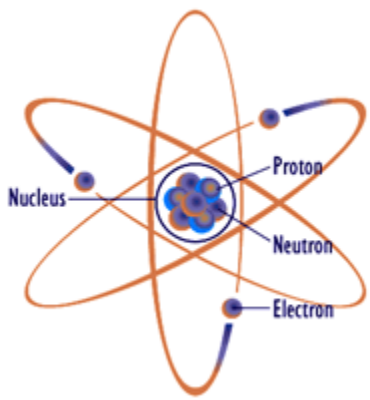

Figure 2.2.1 : Planetary atomic model: Popular but sadly incorrect. Image source (modified)

Unlike people, all particles of a type are indistinguishable: every proton is identical to every other proton and every electron is identical to every other electron. The number of protons determine what the element is. The simplest element, hydrogen, has a single proton in its nucleus. In contrast, helium has two protons in its nucleus and copper has 29. The nucleus may also contain a number of neutrons as well (not necessarily equal to the number of protons). In any stable atom, the number of electrons will equal the number of protons. If they aren't the same, the atom is called an ion (technically, a cation has fewer electrons than protons and an anion is its opposite). With an external energy source, it is possible to separate an electron from an atom. This leaves us with an electron and an atom that now has a net positive charge. It is this ability to separate these particles, and thus separating charge, that gives rise to our concept of electricity including such items as current and voltage, as we shall see.

Most of the mass of any given atom is from the protons and neutrons. Protons and neutrons have similar masses, about 1.67E−24 grams each. The mass of an electron is roughly 2000 times smaller. The radius of a proton is approximately 0.87E−15 meters and the mean distance to the nearest electron is about 5.3E−11 meters. Therefore an electron is about 60,000 times farther away from the proton than the size of said proton. To put this into perspective, that's roughly the same as the ratio between a golf ball and a sphere with a radius of 3/4ths of a mile or 1200 meters. This would be the case for a hydrogen atom as it consists of a single proton and electron. The magnitude of this ratio is not much different for other substances, including things like diamond and quartz that are very hard and solid. If you think about that for a moment, you realize that the idea of “solidity” is in some ways an illusion because the vast majority of what we call “something” is really just empty space (like a golf ball rattling around inside a sphere that's a mile and a half wide). In reality, the feeling of solidity when you grab something with your hand is just the result of the interaction of atomic forces between your hand and the object. Indeed, if we could somehow get rid of that “empty space”, we could fit a mountain inside of a car (although it would probably require a severely upgraded suspension).

For our immediate work, perhaps the most important issue is that of charge, an essential part of the theory of electromagnetism. It was mentioned that protons are positively charged and electrons are negatively charged. What then is charge? Charge is not an obvious physical attribute like someone's height or eye color. It's closer to a behavioral characteristic. Saying a particle is charged is like saying someone has an attractive personality. The magnitude of the charge on an electron is the same as the magnitude of the charge on a proton. The only difference is the polarity: protons are positively charged while electrons are negatively charged. An important thing to remember is that particles with the same polarity repel each other while opposites attract[1].

Charge is measured in coulombs, named after Charles-Augustin de Coulomb a French physicist of the eighteenth century. The charge on a single electron is tiny, a mere 1.602E–19 coulombs. Alternately, it takes 6.242E18 electrons to create a charge of one coulomb. More on this in a moment.

One of the major issues with the planetary model is the idea that electrons whirl around the nucleus in stable, planet-like orbits. That's simply not true. First, the electron inhabits a region of 3D space and does not simply move through a plane. Second, due to the Heisenberg Uncertainty Principle, we can't precisely plot the position and trajectory of a given electron. The best we can do is make a plot of where the electron is likely to be. This is called a probability contour. To understand this concept, imagine that you could record the position of a specific electron relative to the nucleus at a specific time. A moment later you record its new position, a moment after that you record the next position, and so on for thousands of measurements. If you attempted to plot them all, you would wind up with a cloud of dots around the nucleus. This cloud is referred to as an orbital. You wouldn't know how the electron got from one position to the next but you would get a general idea of where it was likely to be. Ultimately, an orbital looks nothing like a planetary orbit.

A good analogy to an electron probability contour is the mapping of the flight of migratory birds. For example, a certain group of Canada geese might migrate from their summer range in the far north of Canada to their summer abode in the southern USA via s section of the Atlantic Flyway, perhaps through central New York State, as shown in purple, in Figure 2.2.2 . The flyway tells you where these birds are likely to be found while migrating. If they are taking the route through central New York, at some point it is likely that any particular goose in that flock will be found near the cities of Utica, Syracuse and so forth. It is much less likely that any particular goose from that flock will be found in Ohio or New Hampshire. Texas, of course, is right out. The flyway gives a good bit of data regarding where these birds are likely to be but in no way can it predict with any accuracy precisely where any individual bird will be on a specific date, nor precisely where it will end its migration.

Figure 2.2.2 : Electron behavior versus migratory birds.

Returning from our avian diversion, we note that there are several potential orbitals. Due to quantum physics, only certain orbitals are allowed. The permissible electron energy levels are first grouped into shells, then subshells and finally orbitals. It is important to remember that orbitals indicate the electron energy level. That is, a higher orbital implies a higher energy level. Further, orbitals fill in first from lowest energy level to highest energy level.

Shells are denoted by their principal quantum number, n; 1, 2, 3, etc. The higher the number, the more subshells it can contain. Subshells are designated by letters, the first four being s, p, d, and f. Shell 1 contains only subshell s while shell 2 contains subshell types s and p. Shell 3 contains subshell types s, p and d, and so on. These subshells may also have variations within them. There is one variation on s, three variations on p, five variations on d, etc. These variations are the orbitals and each orbital can hold a maximum of two electrons.

Putting this all together, we find that the first shell can contain a maximum of two electrons: two in the single s subshell orbital ($1s$). The second shell can contain a maximum of eight electrons: two in the s subshell ($2s$) plus two in each of the three p subshell orbitals ($2p$). In like manner the third shell can contain a maximum of 18 electrons: two in $3s$, six in $3p$ and two in each of the the five d subshell orbitals ($3d$). You can condense this into a simple formula:

$$\text{Number of electrons per shell } = 2n^2, \text{ where } n \text{ is the shell number}$$

Figure 2.2.3 shows the electron probability contour of the innermost orbital, namely $1s$ (i.e., principle quantum number 1, subshell s). As you can see, it is spherical in shape. The nucleus is located at the center, obscured here. All s orbitals are similarly spherically shaped although the internals change. $1s$ is the lowest energy orbital.

Figure 2.2.3 : Electron probability contour for innermost orbital, 1s.

Orbitals are not limited to simple spherical shapes. Higher order orbitals can take on a variety of forms. Figure 2.2.4 shows a much more complex electron probability contour. The nucleus is situated in the center of the concentric rings. Obviously, this is nothing like the well-behaved elliptical orbits of planets around the sun (nor the paths of migratory birds, unless they are very confused).

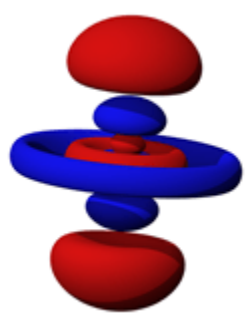

Figure 2.2.4 : A higher order electron probability contour.

As visually interesting as these graphics are, they are cumbersome to work with. Consequently, a more functional graphic is called for. Such a device is the Bohr model, named after Danish physicist Niels Bohr. An example is shown in Figure 2.2.5 .

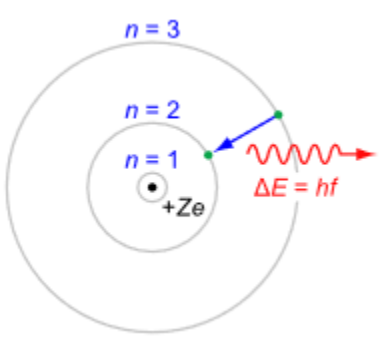

Figure 2.2.5 : Generic Bohr model.

It is important to understand that the Bohr model is an energy description of the atom, not an attempt to mimic its physical appearance or structure. The nucleus is placed at the center. It is surrounded by concentric rings that represent the electron shells. The higher the number, the larger the ring and the greater the energy level. If an electron were to move from a higher level to a lower level, the energy difference is radiated out. This could be in the form of heat or light. This is a point worth remembering.

For example, this transition is what makes light emitting diodes (LEDs) function. The inverse is also possible, namely that by absorbing energy, an electron can move into a higher orbital. This is an equally powerful concept.

Using the Bohr model we can create diagrams to represent individual elements. For example, copper has an atomic number of 29 meaning that it has 29 protons and 29 electrons. The electron shell configuration is 2-8-18-1. That is, the first three shells are completely filled and there is a single electron in the fourth shell. The Bohr model for copper would simply show four rings, the first three being filled and with a single electron in the fourth ring. This is shown in Figure 2.2.6 . In this version, the individual electrons are drawn in each shell and the atomic number is indicated at the nucleus. Again, please do not imagine this representing individual electrons orbiting the nucleus in lanes. This is an energy level depiction.

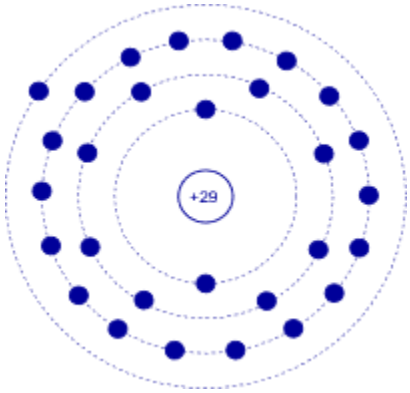

Figure 2.2.6 : Bohr model of copper.

It is worth noting that a lone outer electron is only loosely bound to the nucleus thus making the movement of charge through said material relatively easy, given the application of some external energy source. Consequently, copper is a very good conductor. This is a characteristic shared by common metals: they are good conductors because they only have one or two loosely held electrons in their outer shell. Examples include silver, gold and aluminum (one outer electron for each, all of them being very good conductors); and iron, tin and nickel (two outer electrons for each, and this group being not quite as conductive as those in the first group).

References

[1]The obvious question might be “Why doesn't the nucleus break apart?” The answer is that the sub-atomic strong nuclear force has a greater effect at atomic distances than electromagnetism, and thus binds the protons and neutrons together in the nucleus.

This page titled 2.2: An Atomic Model is shared under a CC BY-NC-SA 4.0 license and was authored, remixed, and/or curated by James M. Fiore via source content that was edited to the style and standards of the LibreTexts platform.

2.3: Charge and Current

As already noted, charge is an attractive force. It is denoted by the letter Q and has units of coulombs. Electrons are negatively charged and protons are positively charged. All electrons and protons exhibit the same magnitude of charge, roughly 1.602E−19 coulombs. Thus, one coulomb is equivalent to the charge exhibited by approximately 1/1.602E−19, or 6.242E18 electrons. Further, opposite charges attract while like charges repel, similar to the poles of a magnet.

It is possible to move charge from one point to another. The rate of charge movement over time is called current. It is denoted by the letter I and has units of amps (or amperes)[1]. One amp of current is defined as one coulomb per second.

$$1 \text{ amp } \equiv 1 \text{ coulomb } / 1 \text{ second} \tag{2.3.1}$$

That is, one amp can be visualized as approximately 6.242E18 electrons passing through a wire in a period of one second. Consider Figure 2.3.1 .

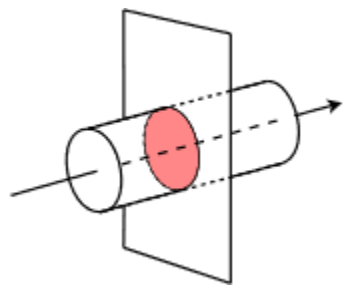

Figure 2.3.1 : Defining current as charge flow through a wire.

Here we have a wire with electrons flowing through it in the direction of the arrow. We cut this wire with an imaginary plane, leaving us with the highlighted disk. Now imagine that we could count the number of electrons passing through this disk over the course of one second. Because we know the charge possessed by one electron, we simply multiply the number of electrons by the charge for each to yield the total charge, and thus we arrive at the current. As a formula:

$$I = Q/t \tag{2.3.2}$$

where

- I is the current in amps,
- Q is the the charge in coulombs,
- t is the time in seconds.

A common analogy for electric current is the flow of water through a pipe or river. Just as we can imagine water flow as “gallons or liters per minute”, we imagine electric current as “coulombs per second”.

Example 2.3.1

In the course of one-half second, a certain battery delivers a charge of three coulombs. Determine the resulting current.

Solution

$$I = \frac{Q}{t}$$

$$I = \frac{3C}{0.5s}$$

$$I = 6A$$

Example 2.3.2

A device delivers a current of 25 mA. Determine the charge transferred in two seconds along with the equivalent total number of electrons.

Solution

$$I = \frac{Q}{t}$$

$$Q = I \times t$$

$$Q = 25mA \times 2s \text{ from Definition 2.3.1, amp-seconds is coulombs}$$

$$Q = 50mC$$

As one coulomb is equivalent to 6.242E18 electrons, just multiply to find the total number of electrons transferred.

$$\text{Total electrons } = Q \times \text{ number of electrons per coulomb}$$

$$\text{Total electrons } = 50mC \times 6.242E18$$

$$\text{Total electrons } = 3.121E17 \text{ electrons}$$

In sum, the larger the charge transferred within a given time period, the greater the current. Modern electrical and electronic systems might deal with currents of under a picoamp or, at the other extreme, thousands of amps. That is an astonishing range. It is roughly equivalent to a single drop of water dripping from a leaky faucet each second compared to 1000 times the flow of water over Niagara Falls.

References

[1] I stands for Intensity (of current), and was so named by André-Marie Ampère.

This page titled 2.3: Charge and Current is shared under a CC BY-NC-SA 4.0 license and was authored, remixed, and/or curated by James M. Fiore via source content that was edited to the style and standards of the LibreTexts platform.

2.4: Energy and Voltage

Energy is defined as the ability to do work. It is denoted by the letter W. The basic unit is the joule although other units are sometimes used (for example, the calorie or the kilowatt-hour, kWh).

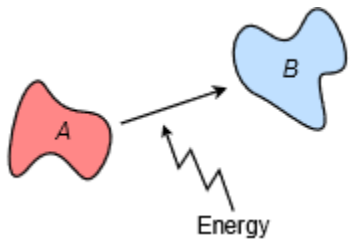

Figure 2.4.1 : Defining voltage as work to move charge.

If we were to move a charge from one point to another (for example, separating an electron from an atom), we would have to expend energy to do so. This is illustrated in Figure 2.4.1 . In this Figure, we would say that B has a higher electric potential than A. In other words, there is a potential difference between B and A. We refer to this change as voltage. It is denoted by the letter V (or sometimes E[1]) and has units of volts, in honor of Alessandro Volta. One volt is defined as one joule per coulomb.

$$1 \text{ volt } \equiv 1 \text{ joule } / 1 \text{ coulomb} \tag{2.4.1}$$

As you might guess, the bigger the charge to be moved, the greater the energy required. Expressed as a formula,

$$V = W/Q \tag{2.4.2}$$

Where

V is the voltage in volts,

W is the energy in joules,

Q is the charge in coulombs.

Unlike current, voltage always implies two points for measurement because it involves a difference. Often, one of the points is a common reference, such as earth ground or a circuit ground (i.e., chassis ground). Sometimes people will refer to a point in a circuit as having a certain voltage, as in “point X is 12 volts”. Although common in use, this is somewhat sloppy and not strictly correct. It is important to always remember that this value is relative to some reference point. As a general rule, a voltage will be denoted using the two points as subscripts, for example, V_{AB}, that is, the voltage at point A relative to point B. If only a single subscript is used, as in V_A, then the second, or reference, point is assumed to be the system common or ground. In this case, we're referring to the voltage at point A relative to the system common point. Finally, by definition, $V_{AB} = V_A - V_B$, as they have the same reference.

Example 2.4.1

100 joules are expended to move a 20 coulomb charge from point A to point B. Determine the resulting voltage.

$$V_{BA} = \frac{W}{Q}$$

$$V_{BA} = \frac{100J}{20C}$$

$$V_{BA} = 5V$$

Note that it is possible for a voltage to be negative. This simply means that the potential at the point of interest is less than that of the reference point. In Example 2.4.1 we discovered that point B is five volts above point A. We could just as easily say that point A is five volts below point B, or $V_{AB} = -5$ V. Further, we can state the difference in terms of the individual ground-referenced voltages, or $V_{BA} = V_B - V_A$.

Static Electricity and ESD

While it is obviously true that higher voltages imply higher associated energies (charge being held constant), it is not true that a particularly high voltage is necessarily lethal. This is because a very high voltage can be achieved by moving a small charge with only modest energy input. A good example of this is static electricity, so called because it is not associated with a moving current.

Static electricity is commonly generated through the triboelectric effect which involves the transfer of electrons from one material to another via physical contact such as rubbing or scraping. If said materials are good electrical insulators, charges will remain on the materials and can build to very high levels, creating a large voltage. Many plastics, such as polystyrene and polyester, are good candidates. The effect can be noticed with certain fabrics, especially under low humidity. For example, removing a polyester fleece pullover or jacket can elicit a certain crackling sound. The sliding of the fleece builds up the charge and eventually the voltage will be become so large that it will arc through the air to surrounding objects which have a lower voltage. This happens quickly over many parts of the garment, each crackle being an individual arc. In fact, if tried in darkness, it is possible to see a cascade of small sparks. This is the same phenomenon that causes a spark when you touch a car after sliding off the seat on a cold and dry winter's day, or a small shock when you touch an object (or another person) after walking across a carpet in a dry library.

Figure 2.4.2 : Triboelectric effect and static electricity: Cat fur meets polystyrene.

Anyone who has opened a box filled with polystyrene packing peanuts can attest to the troublesome nature of the triboelectric effect, as the very light peanuts can easily adhere to other objects due to the electric charge generated through their displacement. No amount of manic brushing or throwing of the pieces will reduce the effect and may, in fact, make it worse. A simple solution in some instances is to spray a fine mist of water on the packing peanuts as the water will provide a conduction path, draining off the charges. Of course, this will not be appropriate in all situations, particularly in the one shown in Figure 2.4.2 . In the prior examples, the static voltage may be on the order of a few thousand volts but the associated energy may be just a few microjoules. In spite of the high voltage, this is not enough to kill someone. On the other hand, the same voltage achieved with a much higher charge and energy could be lethal.

Beyond its simple inconvenience and inadvertent feline entertainment capabilities, high static potential can damage sensitive electronic devices. Care must be taken to prevent the accidental buildup of damaging charges. In the electronics industry this is commonly referred to as ESD, or electrostatic discharge. Steps to reduce ESD include humidity control and the use of conductive devices such as resistive wrist straps for technicians to continually bleed off the charges, thus preventing the creation of a high static potential.

The Height Analogy

Just as the flow of water can be seen as an analogy for electrical current, a serviceable analogy for voltage involves pressure or height. Indeed, sometimes voltage is referred to as “electrical pressure”. The height analogy ties together the concepts of voltage and energy. In this analogy, height corresponds to voltage and mass corresponds to charge.

To begin, we note that there are two kinds of energy: kinetic energy, or energy of motion; and potential energy, or energy by virtue

of position. Potential energy is the product of mass, gravity and height, or $w = mgh$. Keeping gravity equal, we see that the more mass something has or the higher up it is, the greater its potential energy. We might think of potential energy as the object's potential to inflict damage when released.

Figure 2.4.3 : Understanding voltage: David Hume does a header.

To illustrate, we shall call upon 18th century Scottish philosopher and noted soccer fan[2], David Hume. If a soccer ball is held stationary over Mr. Hume's head, as shown in Figure 2.4.3 , the ball has energy by virtue of its position. Releasing the ball from the position shown will scarcely bother Mr. Hume as there is little energy associated with this position relative to the top of his noggin. In fact, he would be hard pressed to head the ball to another player. If, on the other hand, the ball were held considerably higher, its potential energy would be much greater. Therefore, the impact on Mr. Hume's head would be increased dramatically and he would have little difficulty heading the ball down field (i.e., the transformation of potential energy into kinetic energy), although the chances of him gaining a concussion are greatly increased.

Thus, we note that the height of the ball gives us some insight into its potential energy, although these terms are not synonymous. That is to say, if, instead of a soccer ball, we had used a ping-pong ball, even when dropped from an extreme height, the chances of a concussion are non-existent[3]. On the other hand, if the ball had been replaced with one made of solid iron, a drop from even a modest height could render our most excellent philosopher seriously dead. So it is with voltage. If the charge associated with the voltage is small, even a relatively high voltage will not be lethal (as in the case of simple static electricity on clothing), however, if associated with a sufficiently large charge, a much lower voltage can be deadly

References

[1] E is used for voltage sources such as batteries. It is short for EMF, or electromotive force.

[2] Hume, author of An Enquiry Concerning Human Understanding, died in 1776. The modern game of soccer was established in 1863. Let's not let that deter our own inquiry.

[3] The construction of the referred sentence owes a certain debt to the writing style of Mr. Hume.

This page titled 2.4: Energy and Voltage is shared under a CC BY-NC-SA 4.0 license and was authored, remixed, and/or curated by James M. Fiore via source content that was edited to the style and standards of the LibreTexts platform.

2.5: Power and Efficiency

The terms power and energy are often used incorrectly as synonyms. Although related, they are not the same thing. As already mentioned, energy is the ability to do work. In contrast, power is the rate of energy usage. Power is denoted by the letter P and has units of watts, although other units are sometimes used such as the horsepower (1 horsepower $\approx$ 746 watts). One watt is defined as one joule of energy consumed per second.

$$1 \text{ watt } \equiv 1 \text{ joule } / 1 \text{ second} \tag{2.5.1}$$

As a formula,

$$P = W/t \tag{2.5.2}$$

Where

P is the power in watts,

W is the energy in joules,

t is the time in seconds.

To better understand the concept, consider for a moment a delicious peanut butter and banana sandwich. This sandwich contains a certain number of food calories, let's say 300 in total. A food calorie refers to a certain amount of energy that humans can extract from an item of food. That energy enables us to do some manner of work such as walking, swimming or just breathing. The sandwich can be seen as an energy storage medium, a battery for biological units called humans. The question is, what do we do with the energy, and more to the point, how fast do we use it? For example, that sandwich might be sufficient to allow someone to run a 5k (3.1 mile) road race in 17 minutes. In contrast, it also might be sufficient to allow that same person to watch television for three hours. It's the same amount of energy being used, it's just being used at a much faster rate in the former case. That rate is power. The 5k runner has a much higher power output than the TV watcher.

Example 2.5.1

100 joules are consumed by a device in 0.1 seconds. Determine the power in watts and in horsepower.

$$P = \frac{W}{t}$$

$$P = \frac{100J}{0.1s}$$

$$P = 1000W$$

As one horsepower is approximately 746 watts, this is equivalent to

$$P_{hp} = \frac{P_W}{746W/hp}$$

$$P_{hp} = \frac{1000W}{746W/hp}$$

$$P_{hp} = 1.34hp$$

Power can also be found by multiplying a current by the associated voltage. To begin, we note the definitions of current and voltage, Equations 2.3.2 and 2.4.2 respectively, and then combine them.

$$I = \frac{Q}{t}$$

$$V = \frac{W}{Q}$$

$$I \times V = \frac{Q}{t} \times \frac{W}{Q} = \frac{W}{t}$$

From Equation 2.5.2, we know that $P = W/t$, thus $P = IV$. This is known as power law.

$$P = I \times V \tag{2.5.3}$$

Where

P is the power in watts,

I is the current in amps,

V is the voltage in volts.

Example 2.5.2

If a 9 volt battery delivers a current of 0.1 amps, determine the power delivered in watts.

$$P = I \times V$$

$$P = 0.1amps \times 9volts$$

$$P = 0.9W$$

Efficiency

Efficiency is the ratio of useful output power to applied power expressed as a percentage. It is denoted by the Greek letter η (eta) and is always less than 100%. Expressed as a formula,

$$\eta = \frac{P_{out}}{P_{in}} \times 100\% \tag{2.5.4}$$

Where

η is the efficiency in percent,

P_{out} is the output power,

P_{in} is the input power.

Generally speaking, the higher the efficiency, the better. This implies less waste. In other words, if a system is 30% efficient, then 70% of the input power is wasted, whereas if a system is 99% efficient, then only 1% of the input power is wasted. The concept is illustrated graphically in Figure 2.5.1 . In most systems, waste power turns into heat which is not a desired commodity, and in fact often reduces the lifespan of electrical components.

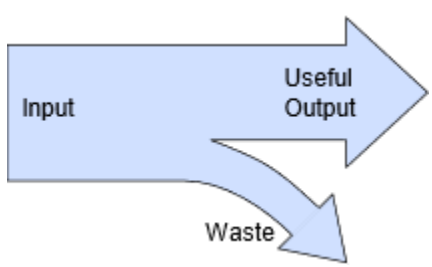

Figure 2.5.1 : Basic concept of efficiency.

Example 2.5.3

If a device draws 200 watts of power and has a useful output of 120 watts, determine the efficiency.

$$\eta = \frac{P_{out}}{P_{in}} \times 100\%$$

$$\eta = \frac{120W}{200W} \times 100\%$$

$$\eta = 60\%$$

In this case, the device is wasting 40% of the input power, or 80 watts.

Example 2.5.4

An audio amplifier has a maximum rated output of 100 watts to a loudspeaker. If it exhibits an efficiency of 70%, determine the input power required and the amount of power wasted.

$$\eta = \frac{P_{out}}{P_{in}} \times 100\%$$

$$P_{in} = \frac{P_{out}}{\eta} \times 100\%$$

$$P_{in} = \frac{100W}{70\%} \times 100\%$$

$$P_{in} = 142.9 watts$$

As 142.9 watts are drawn by the amplifier and only 100 watts are delivered to the loudspeaker, then the difference, or 42.9 watts, is wasted power (most likely just making the amplifier hot).

This page titled 2.5: Power and Efficiency is shared under a CC BY-NC-SA 4.0 license and was authored, remixed, and/or curated by James M. Fiore via source content that was edited to the style and standards of the LibreTexts platform.

2.6: Energy Cost and Battery Life

As we have seen, knowing the voltage and current demands of a given device allows us to determine its power rating and energy consumption. The next steps are to determine the cost of operating a device and, if it's battery powered, how long the device will last before needing new batteries.

Computing Energy Cost

Once we know the power drawn by the device and for how long it will be used, the cost to operate a device can be determined given the per unit cost of energy. In spite of the fact that many people refer to their local electricity supplier as “the power company”, we do not buy “power”, per se. Rather, we are billed for energy. Although it would be possible to determine the cost per joule (or more practically, per megajoule), suppliers normally bill based on kilowatt-hours, or kWh, the product of the power and time[1]. This unit is used because most residential and commercial devices and appliances are rated in terms of power consumption in watts. Multiplying the power consumption in watts by the length of time the device is used in hours yields a watt-hour value. This is then scaled by a factor of one thousand to arrive at kWh. For example, a 1500 watt toaster oven used for 30 minutes (i.e., 0.5 hours) yields 750 watt-hours, or 0.75 kWh. Finally, knowing the per kWh cost, a simple multiplication yields the cost of electricity. Thus, if the utility charges 10 cents per kWh, then the cost to run that toaster oven is 7.5 cents. If it is used for a full hour then it costs 15 cents, and so on.

To put usage in perspective, a typical home in the USA or Canada uses about 900 kWh per month while households in many countries in Europe might use one half to one quarter of that amount. Global electricity generation is around 25 million gigawatt hours per year. Typical electricity rates in the USA are between ten and twenty cents per kWh, depending on geographic region and sector (e.g., residential or commercial).

Example 2.6.1

A 100 watt incandescent light bulb is left on for 24 hours. If the cost of electricity is 15 cents per kWh, determine the cost to run the light.

$$Cost = P \times t \times rate$$

$$Cost = 100W \times 24hours \times 0.15\$/kWh$$

$$Cost = \$0.36$$

At this point, it should be obvious that the more efficient a device is, the less expensive it will be to run. In fact, it is quite possible that in the long run, a device that is more expensive than a similar, though less efficient, device may be considerably less expensive to use over the course of its lifespan. A good example is a comparison between an ordinary incandescent light bub and an LED light. LED lighting can be an order of magnitude more efficient than incandescent lighting. Indeed, incandescent bulbs may convert less than five percent of their input into usable light output, the remaining 95 percent just turning into heat. While they are less expensive to purchase initially, their operating cost is much higher. A proper way to compare lights is to examine their light output in lumens, not their power consumption. For example, a 60 watt incandescent light produces about 800 lumens of illumination. That same level of illumination can be obtained with an LED drawing just 9 watts. Further, typically LED lights last ten to twenty times longer than incandescent bulbs.

This will be illustrated in the next example.

Example 2.6.2

A certain 14 watt LED light produces the same illumination as a 75 watt incandescent light bulb. Assume the LED costs $11 and has an expected life of 15,000 hours. The incandescent costs 50 cents each and has an expected life of 1000 hours. If the cost of electricity is 12 cents per kWh, determine the cost to run each version for 15,000 hours.

First, it should be noted that 15 incandescent bulbs will be needed. At 50 cents each, that's $7.50 for the bulbs. The cost to run them is,

$$Cost = P \times t \times rate$$

$$Cost = 75W \times 15000hours \times 0.12\$/kWh$$

$$Cost = \$135.00$$

The total is $ 142.50. Now for the single LED required:

$$Cost = P \times t \times rate$$

$$Cost = 14W \times 15000hours \times 0.12\$/kWh$$

$$Cost = \$25.20$$

The total is $36.20, a considerable savings, not to mention other positive factors including only having to change the light once instead of fifteen times; a considerable reduction in wasted energy, thus lowering demand and environmental impact; and finally, a reduction in burned out light bulbs for a further lowering of environmental impact (waste stream reduction).

Batteries

A battery is a device used to store electrical energy, generally in the form of a chemical cell. Ideally, it presents a constant voltage, its current varying according to what it drives. In reality, as the battery is used, its voltage will begin to decrease. Eventually, the energy stored in the battery will be exhausted and its voltage will drop to zero. The storage capacity of a battery is measured in amp-hours, Ah (or milliamp-hours, mAh, for smaller batteries). All other factors being equal, the battery with the higher amp-hour rating will last longer before being depleted. This is true for the same size of battery using different compositions (e.g., zinc-carbon versus alkaline), as well as batteries of different physical sizes but having the same voltage. For example, all AAA, AA, C and D cell batteries have a nominal voltage of 1.5 volts. If they are all of the same type, such as alkaline, then the immediate practical difference is that the larger the physical size, the greater its energy storage, and thus the longer it will last.

Over a modest range of currents, the expected lifespan of a battery can be computed based on its amp-hour rating and the current drawn from it.

$$\text{Battery life} \approx \text{amp-hour rating / current draw} \tag{2.6.1}$$

This equation is best used as a rough guide. If the current draw is considerably higher than the current at which the battery was tested, the predicted lifespan will be overly optimistic. On the other hand, if the current draw is considerably lower, it is likely that the battery will last longer than predicted.

The maximum current output of a battery is likewise limited. If such were not the case, we might expect even very small batteries to produce phenomenally large currents for very shorts periods of time. This is not the case.

A graph of discharge curves at various load currents is shown in Figure 2.6.1 . Notice how the battery voltage begins at the rated 1.5 volts and then begins to fall. After a certain point, the rate of decrease accelerates and “drops off of a cliff”. The actual service life will also be application dependent in that some devices can tolerate a lower voltage than others. For example, an old-fashioned flashlight will still work with largely depleted batteries, it simply won't be that bright. If we were to consider 75% of rated voltage as the useful lower limit (a little over 1.1 volts), we see that at a 50 mA draw, the battery will last around 18 hours, achieving about 900 mAh. At 100 mA, it will last around 7 hours, yielding 700 mAh. If we used 1.0 volts as our lower usable limit, we would arrive at 1.05 Ah and 910 mAh, respectively.

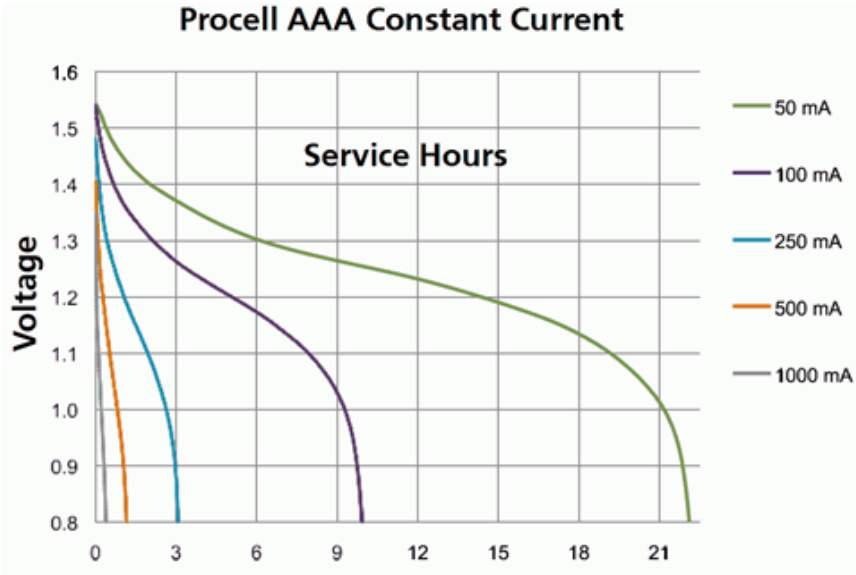

Figure 2.6.1 : Battery discharge curves for various load currents at room temperature. Courtesy of Duracell

Example 2.6.3

A certain battery is rated at 10 Ah. Approximately how long will it last with a 0.5 amp draw?

$$Lifespan \approx \frac{Ah}{I}$$

$$Lifespan \approx \frac{10Ah}{500mA}$$

$$Lifespan \approx 20hours$$

Remember, 20 hours is only an approximation. For a more accurate rendering, consider the following example.

Example 2.6.4

Using the graph of Figure 2.6.1 , determine the expected lifespan with a 100 milliamp draw for a lower voltage limit of 1.2 volts. Also determine the effective amp-hour rating at this point.

The 50 mA curve (purple) passes through 1.2 volts at approximately 5 hours. This is the expected lifespan. The corresponding amp-hour rating is

$$Ah \approx I \times t$$

$$Ah \approx 50mA \times 5hours$$

$$Ah \approx 250mAh$$

Batteries also tend to show decreased performance with reductions in temperature. This is shown in Figure 2.6.2 . For this particular battery, the capacity at freezing (0°C) is roughly half of what it is at room temperature (21°C). Peak current capacity may also be reduced with temperature. This is true of many kinds of batteries, including large 12 volt automotive batteries. This is a major reason why cars are often much more difficult to start on very cold days; their current capacity is reduced, thereby reducing the output of the starter motor.

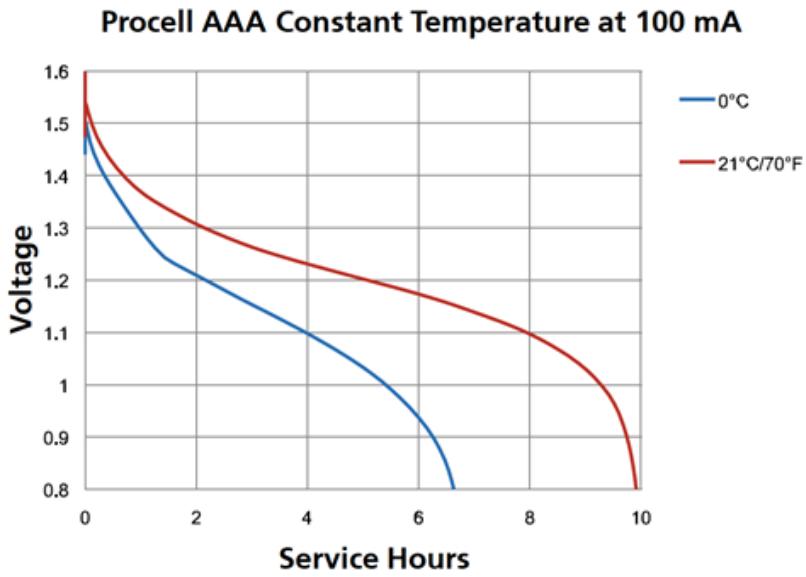

Figure 2.6.2 : Battery discharge curves for different temperatures. Courtesy of Duracell

A table of typical amp hour ratings for common battery sizes is shown in Table 2.6.1 . These values are appropriate for good quality alkaline batteries. Rechargeable NiMH (nickel-metal hydride) would be around the same. Remember, these are just approximations.

Table 2.6.1 : Typical battery capacities.

Battery Size	Capacity (mAh)
AAA	1000
AA	2500
C	5000
D	10000
9 Volt	500

References

[1]Remember, power is the rate of energy usage per unit time, and thus multiplying power by time yields energy. One kWh is approximately equal to 3.6 megajoules.

This page titled 2.6: Energy Cost and Battery Life is shared under a CC BY-NC-SA 4.0 license and was authored, remixed, and/or curated by James M. Fiore via source content that was edited to the style and standards of the LibreTexts platform.

2.7: Resistance and Conductance

We have seen that both current and voltage deal with the movement of charge. Consequently, in any electrical system, voltage and current are interrelated. Let us consider the most simple case. This would involve a single voltage source, such as a battery, driving a single, homogeneous item such as a length of wire or a block of a given material. The physical characteristics of this item will dictate how much current will flow. In general terms,

$$Effect = \frac{Cause}{Oppostion}$$

In this case the cause is the voltage source and the effect is the resulting current. The opposition is the characteristic of the item in question, in other words, its ability to restrict current flow. We call this characteristic resistance. In other words, resistance is a measure of how difficult it is to establish a flow of current (i.e., "resistance to current flow") under a given set of circumstances. It is denoted by the letter R and has units of ohms, in honor of Georg Ohm, a researcher from the early 1800s. The unit is denoted by the capital Greek letter omega, Ω.

Sometimes it is more convenient to use the inverse view of this phenomenon, and instead of referring to how difficult it is to establish a current, we would be interested in how easy it is to establish a current. This is called conductance and it is the reciprocal of resistance. Conductance is denoted by the letter G and has units of siemens, named after Werner von Siemens. The unit is abbreviated as S.

$$R = \frac{1}{G} \tag{2.7.1}$$
$$G = \frac{1}{R}$$

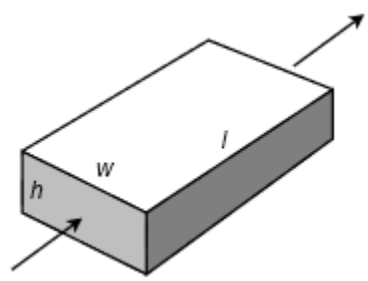

Figure 2.7.1 : Defining resistance.

In this simple scenario, resistance is a function of the material the current is passing through along with its shape. This is illustrated in Figure 2.7.1 where the arrow shows the direction of current flow. An obvious question is "What is this block made of?" It should come as no surprise that the material chosen has a great impact on the current. We have already seen that metals such as copper are good conductors of electricity. Other materials, such as certain plastics and ceramics, are not. These materials are referred to as insulators.

The measure of a material's inherent and general ability to restrict current flow is called resistivity. Resistivity is denoted by the Greek letter ρ (rho). All other factors being equal, the higher the resistivity, the greater will be the resistance. Further, the greater the length of the material that the current must pass through, the greater the resistance. Finally, as the surface area of the cross section (i.e, the face) grows, the resistance decreases. Expressed as a formula

$$R = \frac{\rho l}{A} \tag{2.7.2}$$

Where

R is the resistance in ohms,

ρ is the resistivity,

l is the length of the material,

A is area of the face (h times w).

Resistivity is often specified in ohm-centimeters with the length and area similarly specified in centimeters and square centimeters, respectively. A table of resistivity values for a variety of materials is shown in Table 2.7.1 . Note that resistivity is not necessarily constant across temperature. Indeed, this change can be exploited as a means of measuring temperature. In other applications, we might need it to be as stable as possible across temperature. This need led to the creation of the alloys Constantan and Manganin in the late 1800s which exhibit very high stability across temperature.

From this table we can see that silver has lower resistivity than copper which in turn is lower than gold. This means that if we made identically sized wires of these three materials, the silver version would have the least resistance and gold the highest. Why then, do audio and video cables often feature gold plating? Certainly, it isn't due to lower resistivity and enhanced conductivity. The reason is that gold is a noble metal, meaning that it does not tarnish. In contrast, the surface of both silver and copper will oxidize, creating a patina (the dark “stain” noticeable on old silver and copper implements). The oxide will create a high resistance layer and reduce the integrity of the connection.

It is important to note that Formula 2.7.2 does not include a term for the mass of the material. It is only concerned with the shape of the item. This is an important distinction. If we were to alter the mass but keep the ratio of the length versus the area the same, the resulting resistance would be unchanged. In general, the increase in mass by itself does not necessarily alter the resistance but it may have an impact on the power handling capability of the device.

Table 2.7.1 : Resistivity values for various materials.

Material	Resistivity $\rho(\Omega\cdot\text{cm})$ at 20 °C	Temperature coefficient (K^{-1})
Silver	1.59×10^{-6}	0.0038
Copper	1.68×10^{-6}	0.00404
Gold	2.44×10^{-6}	0.0034
Aluminium	2.65×10^{-6}	0.0039
Zinc	5.90×10^{-6}	0.0037
Nickel	6.99×10^{-6}	0.006
Iron	9.7×10^{-6}	0.005
Platinum	1.06×10^{-5}	0.00392
Tin	1.09×10^{-5}	0.0045
Titanium	4.20×10^{-5}	0.0038
Manganin	4.82×10^{-5}	0.000002
Constantan	4.90×10^{-5}	0.000008
Stainless steel	6.90×10^{-5}	0.00094
Nichrome	1.10×10^{-4}	0.0004
Carbon (amorphous)	5×10^{-4} to 8×10^{-3}	−0.0005
Silicon	6.4×10^{4}	−0.075
Glass	1×10^{13} to 1×10^{17}	
Carbon (diamond)	1×10^{14}	
Hard rubber	1×10^{15}	
Air	10^{11} to 10^{17}	
PET	1×10^{23}	
Teflon	1×10^{25} to 1×10^{27}	

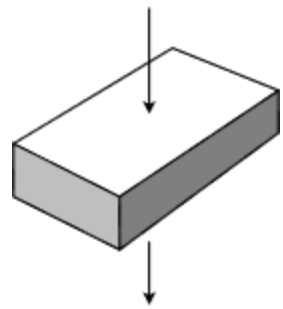

Figure 2.7.2 : Resistance will change due to to altering area and length with mass unchanged.

In contrast, if we take that that original mass and reshape it, or just apply the current to a difference face, such that the effective surface area and length change, then the resulting resistance will also change. This is illustrated in Figure 2.7.2 . Here we have taken the item shown in Figure 2.7.1 and directed the current flow from top to bottom rather than through the side. In this orientation, the surface area is much increased and the length through which the current must travel is greatly reduced. Consequently, the effective resistance in this orientation will be considerably less than that seen in the original.

Example 2.7.1

A certain material has a resistivity of 0.2 ohm-centimeters. Determine the resistance of a piece that is 0.3 cm wide, 0.5 cm high and 4 cm long.

$$A = h \times w$$

$$A = 0.5cm \times 0.3cm$$

$$A = 0.15cm^2$$

$$R = \frac{\rho l}{A}$$

$$R = \frac{0.2\Omega cm \times 4cm}{0.15cm^2}$$

$$R = 5.333\Omega$$

For our next example, let's consider a spool of wire. In many cases we treat wire ideally, as if it has no resistance. While this can be a good approximation in many instances, especially with relatively short runs of wire, such is not always the case.

Example 2.7.2

A certain gauge of copper wire has a diameter of 0.6 mm. Determine the resistance if the spool is 200 meters long.

Table 2.7.1 indicates that the resistivity of copper is 1.68E−6 ohm-centimeters. The trick here is that we must keep the units consistent. As there are 100 centimeters to the meter, the length is 200 meters times 100, or 20,000 centimeters (i.e., 20E3). Given that there are 10 millimeters to the centimeter, the diameter must be decreased by a factor of ten, yielding a diameter of 0.06 cm and thus a radius of 0.03 cm.

$$A = \pi r^2$$

$$A = \pi(0.03cm)^2$$

$$A = 2.83E - 3cm^2$$

$$R = \frac{\rho l}{A}$$

$$R = \frac{1.68E-6\Omega cm \times 20E3cm}{2.83E-3cm^2}$$

$$R = 11.9\Omega$$

The amount of resistance seen in Example 2.7.2 would be considered excessive if the item to be connected is something as simple as a loudspeaker, which typically would be around 8 Ω. And while no one would likely need 200 meters of cable to connect a loudspeaker in their home, that sort of distance would be unremarkable in a large stadium or airport terminal. Don't forget, we'd need wire to and from the loudspeaker, achieving a total separation of 100 meters at most.

Various thicknesses of cables and wires are used for a wide variety of purposes. To make this easier, wire thicknesses have been standardized. The most common standard in North America is the American Wire Gauge, or AWG. This is a nonmetric specification with origins in the mid nineteenth century. The larger the gauge number, the smaller the wire diameter, and the less current it safely can carry. To put the gauge numbers in perspective, typical small home appliances use 16 or 18 gauge wire, basic home wiring uses 12 gauge (with a 20 amp circuit breaker), and hook-up wire used in an electrical circuits or electronics laboratory solderless breadboard is commonly 22 or 24 gauge.

For general purpose wiring, copper is by far the most common metal used because it is highly conductive and relatively inexpensive. Some other metals are used in special cases, for instance, aluminum is used for long distance power transmission lines.

Table 2.7.2 : AWG wire data for copper conductors.

AWG	Diameter (in)	Diameter (mm)	Resistance/length (Ω/km)	Resistance/length (Ω/1000ft)
0000 (4/0)	0.4600	11.684	0.1608	0.04901
00 (2/0)	0.3648	9.266	0.2557	0.07793
0 (1/0)	0.3249	8.251	0.3224	0.09827
2	0.2576	6.544	0.5127	0.1563
4	0.2043	5.189	0.8152	0.2485
6	0.1620	4.115	1.296	0.3951
8	0.1285	3.264	2.061	0.6282
10	0.1019	2.588	3.277	0.9989
12	0.0808	2.053	5.211	1.588
14	0.0641	1.628	8.286	2.525
16	0.0508	1.291	13.17	4.016
18	0.0403	1.024	20.95	6.385
20	0.0320	0.812	33.31	10.15
22	0.0253	0.644 5	52.96	16.14
24	0.0201	0.511	84.22	25.67
26	0.0159	0.405	133.9	40.81
32	0.00795	0.202	538.3	164.1
40	0.00314	0.0799	3441	1049

A table of gauge sizes and associated parameters is shown in Table 2.7.2 . This table assumes copper is being used for the wire. Note that as the diameter of the wire decreases, the amount of resistance for a particular length increases, as expected from Equation 2.7.2.

Using this table we can perform a quick crosscheck of Example 2.7.2 . The wire diameter used in that example was 0.6 mm which is just a little smaller than AWG 22 as listed in the table. Further, #22 wire is listed as having a resistance of approximately 53 Ω per km. For 200 meters, as used in the example problem, this works out to 10.6 Ω. As #22 wire is slightly larger in diameter, we expect it to show slightly less resistance than the calculated value of 11.9 Ω, which it does.

While it may not be immediately apparent, gauge numbers proceed in a logarithmic fashion based on diameter. Stepping up one gauge number (e.g., from #10 to #11) decreases the diameter by a factor of approximately 0.89. As resistance is inversely proportional to the square of the diameter (i.e., the area), the resistance increases by over 25%. Even numbered sizes are particularly common in use and a jump to the next higher even gauge number (e.g., #18 to #20) produces a resistance increase of nearly 60%.

Resistors and the Resistor Color Code

Resistors are devices used to control the currents and voltages in a circuit. They are available in many shapes and sizes, and are normally designed to maintain stable ohmic values in spite of environmental changes such as temperature and humidity. A sample of different resistor styles is shown in Figure 2.7.3 . As a general rule, the larger the resistor, the more power it can handle. At the back of the figure is a large ceramic power resistor using a rectangular aluminum housing. This device is rated for 200 watts of dissipation. Immediately in front and to the right of it are several smaller ceramic power resistors with ratings in the 5 to 20 watt range. Along the left side is a set of carbon composition and carbon film resistors ranging from 1 watt down to one-tenth watt in dissipation. Toward the center is a multi-lead chip resistor that contains several resistors in one package. With few exceptions, all of these items are classified as “through-hole” components, that is, their leads are designed to go through pre-drilled holes in a printed circuit board. These are also the most commonly used components in an electrical lab as the leads fit into solderless breadboards and the components are a convenient size.

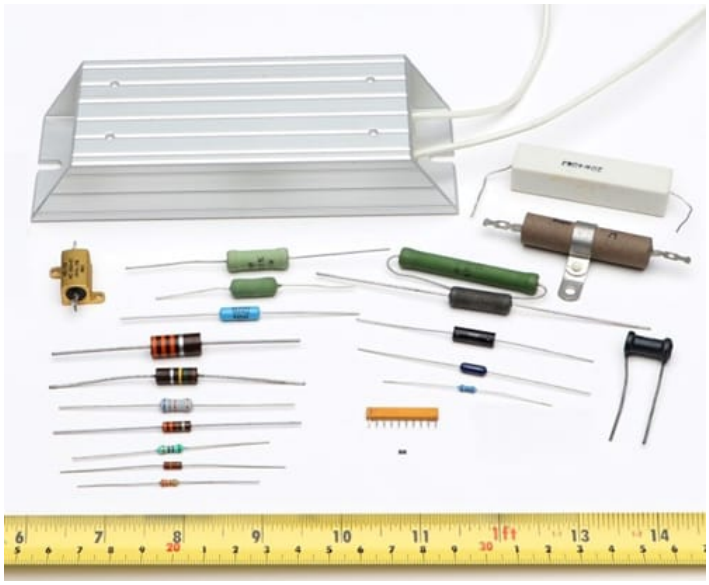

Figure 2.7.3 : A variety of different resistors.

With the increasing desire to shrink components, modern production designs use surface mounting techniques in place of through-hole construction. At the bottom-center is a small dot which is, in fact, a surface mount resistor capable of 1/2 watt of power dissipation. A close-up is shown in Figure 2.7.4 . Obviously, these devices are too small to be practical to use without special equipment.

Figure 2.7.4 : Close up of a surface mount resistor.

Resistors are linear bilateral devices. Being linear, their current-voltage relation can be drawn as a straight line. Bilateral means that the polarity of voltage or direction of current will not matter. In other words, unlike a battery, these devices cannot be inserted into a circuit backwards because either orientation works the same way. If the horizontal axis is voltage and the vertical is current, then the slope of the line yields the conductance. Thus, the steeper the line, the lower its resistance. This is illustrated in Figure 2.7.5 .

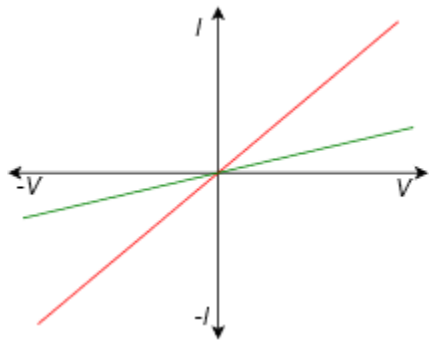

Figure 2.7.5 : Current-voltage plot of two resistors.

Not all electrical components are linear and bilateral. A good example is the semiconductor diode, a commonly used device in electronic systems. The current-voltage plot of a diode is shown in Figure 2.7.6 for comparison. Note that the plot is not a simple straight line, thus it is not linear. Further, the first and third quadrant responses are wildly different, indicating that polarity is of utmost importance. Clearly, it matters which way these kinds of devices are inserted into a circuit.

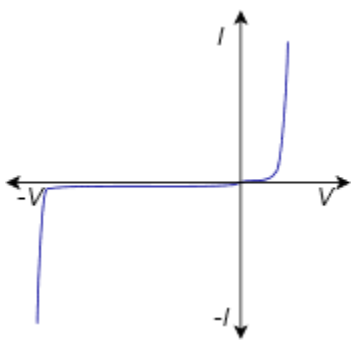

Figure 2.7.6 : Current-voltage plot of a diode: neither linear nor bilateral.

Resistors are available in standardized ohmic values and at standardized power ratings (see Appendix A). Along with their resistance value, resistors also have a specified tolerance. This specifies an allowable range of variation of the stated value. For example, a 220 ohm resistor may have a tolerance of 10%. This means that the actual value of any given specimen from a box of these resistors may be off of the nameplate or nominal value by 10% or 22 ohms. Thus, any particular resistor might be as high as 242 ohms or as low as 198 ohms.

General purpose resistors use a color code to denote their value and tolerance. Typically, this will involve four color stripes: two for the precision/mantissa, one for the power of ten, and the fourth to indicate the tolerance. For higher precision, a five stripe version may be used with the first three denoting the precision/ mantissa. Alternately, high precision resistors may have their nominal value printed directly on them. Refer to Figure 2.7.7 for an example of the basic variety.

Figure 2.7.7 : Example of basic four stripe resistor color code.

The first two bands, here yellow and violet, indicate the precision or leading digits. The third band, here orange, indicates the

power of ten or “number of zeroes” to add. The fourth band, silver in this example, indicates the tolerance. Note that the fourth band is spaced away from the others to avoid accidentally reversing the order.

The color code is shown in Figure 2.7.8 . To assist in remembering the sequence, a number of mnemonic aids have been used, the first letter of each word starting with the same letter as the corresponding color. One example is the “Picnic Basket Mnemonic” which is: Black Bears Robbed Our Yummy Goodies Beating Various Gray Wolves. Another possibility is to note that the middle section follows a rainbow with black and white at the extreme ends.

Color		Numeral
	Black	0
	Brown	1
	Red	2
	Orange	3
	Yellow	4
	Green	5
	Blue	6
	Violet	7
	Gray	8
	White	9
For small resistor values If the multiplier band is gold then divide by10; if silver, divide by 100.		

Figure 2.7.8 : Resistor color code.

The tolerance band colors are as follows: For basic parts silver is $\pm 10\%$ and gold is $\pm 5\%$. If the fourth band is omitted, this indicates a tolerance of $\pm 20\%$, although it is seldom used in modern designs. For precision parts some colors are reused but follow the color code numerals: Brown is $\pm 1\%$ tolerance and red is $\pm 2\%$ tolerance. Tighter tolerances are also available. Sometimes an extra band is added that indicates a reliability rating or temperature coefficient. In such cases, it is best to refer to the manufacturer's data sheets for details. We will not pursue these further.

Example 2.7.3

Determine the nominal, maximum and minimum acceptable resistance values for the resistor pictured in Figure 2.7.2 .

The colors are yellow-violet-orange. This translates to 4, 7 and 3. The value is “47 with 3 zeroes”, or 47000 ohms. The silver fourth band indicates 10% tolerance. Thus, the resistor pictured is nominally 47 $k\Omega$ with $\pm 10\%$ variation around the nominal value being acceptable. The tolerance yields ± 4.7 $k\Omega$, so the acceptable range is from 42.3 $k\Omega$ to 51.7 $k\Omega$.

Example 2.7.4

A precision resistor has a color code of orange-blue-green-brown-brown. Determine its value and acceptable range.

The final band indicates that this is a $\pm 1\%$ tolerance component. The first four colors translate to 3, 6, 5 and 1. The value is “365 with 1 zero”, and thus 3650 ohms, or 3.65 $k\Omega$. The allowable range is 3.65 $k\Omega \pm 36.5\ \Omega$.

Example 2.7.5

Determine the nominal value and tolerance of a resistor with the color code green-blue-gold-silver.

The first two colors translate to 5 and 6. Gold in the third band means “multiply by 0.1”. The final band indicates that this is a $\pm 10\%$ tolerance component. Therefore, nominal value is 5.6 Ω. The allowable range is 5.6 $\Omega \pm 0.56$ Ω.

An example of a resistor data sheet is shown in Figure 2.7.9 . This data sheet is for a series of surface mount chip resistors. The available tolerance grades range from 0.5% to 20%. Also, for each variant there are two temperature coefficients available with the most stable being 100 ppm/$^\circ$C (ppm is short for “parts per million”, thus 100 ppm is equivalent to 0.01%). Note that these devices are too small to use the resistor color code. Instead, a numeric code is printed directly on them that follows the rules for color bands, meaning that the final digit is the multiplier. Thus “150” is 15 Ω (1-5 with no zeroes). The exception is very small values where the letter “R” is used in place of a decimal point. Consequently, “2R4” is 2.4 Ω.

RPC Series
Pulse Withstanding Thick Film Chip Resistor

Stackpole Electronics, Inc.
Resistive Product Solutions

Features:

- Excellent pulse withstanding performance
- Broad resistance range
- Higher anti-surge performance compared with RMCF Series
- Standard power RPC, 5% and wider tolerances, are untrimmed
- 1% and wider tolerances are qualified to AEC-Q200
- RoHS compliant and halogen-free
- Lower values may be available – contact factory

Electrical Specifications

Type/Code	Power Rating (Watts) @ 70ºC	Maximum Working Voltage	Maximum Overload Voltage	Resistance Temperature Coefficient	Ohmic Range (Ω) and Tolerance		
					0.5%	1%	5%, 10%, 20%
RPC0402	0.2W	50V	100V	±300 ppmºC	-	1 - 20	
				±100 ppmºC	1 - 1M	20.5 - 1M	22 - 1M
RPC0603	0.1W	50V	100V	±200 ppmºC	10 - 294	1 - 294	10 - 270
				±100 ppmºC	300 - 1M		
RPC0805	0.25W	150V	300V	±200 ppmºC	10 - 294	1 - 294	1 - 270
				±100 ppmºC	300 - 20M		
RPC1206	0.33W	200V	400V	±200 ppmºC	10 - 20	1 - 20	
				±100 ppmºC	20.5 - 20M		22 - 20M
RPC1210	0.5W	200V	400V	±200 ppmºC	10 - 20	1 - 20	
				±100 ppmºC	20.5 - 20M		22 - 20M
RPC2010	0.75W	400V	800V	±200 ppmºC	10 - 20	1 - 20	
				±100 ppmºC	20.5 - 20M		22 - 20M
RPC2512	1.5W	500V	1000V	±200 ppmºC	10 - 20	1 - 20	
				±100 ppmºC	20.5 - 20M		22 - 20M

Working Voltage = √(P*R) or Max. Working Voltage listed above, whichever is lower.
Overload Voltage = 2.5*√(P*R) or Max. Overload Voltage listed above, whichever is lower.

Figure 2.7.9 : Example resistor data sheet. Courtesy of Stackpole Electronics

A particularly important characteristic of most electronic devices is their power handling capacity. For this series there are several variations with power handling from 0.1 watts to 1.5 watts, and maximum working voltages up to 500 volts. Power handling is also a function of ambient temperature. In general, devices have a maximum internal temperature that they can reach before they are damaged. Control of heat tends to be a major issue in many system designs. If the ambient temperature increases, there is less “headroom” for the device's temperature rise, and thus the device will not be able to dissipate as much power. This is illustrated in the graph of Figure 2.7.10 .

Note how the power dissipation is constant at temperatures at and below 70 $^\circ$C. This temperature is considered the maximum normal operating temperature for this device and the power dissipation at this temperature is the one quoted in the data sheet. If the device is operated in a warmer environment, the power dissipation is derated by the percentage given in the graph. For example, at 100 $^\circ$C the dissipation is only about 65% of the nominal rating. Of particular importance, at 155 $^\circ$C the device can no longer dissipate any power, and therefore this temperature serves as the absolute ceiling. After all, a resistor that cannot dissipate any power is a resistor that cannot have any current through it or voltage across it without burning up. It is essentially non-functional.

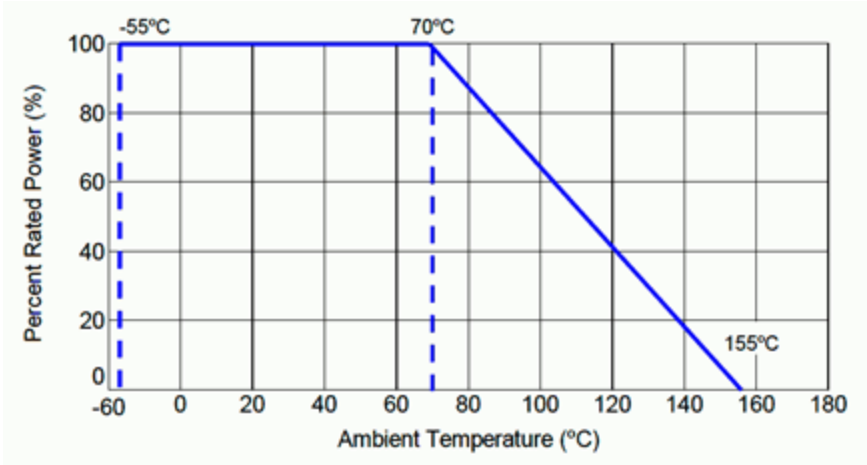

Figure 2.7.10 : Resistor power derating graph. Courtesy of Stackpole Electronics

Of course, just like a skillet on a stove, these devices do not heat up instantly, that is, they exhibit a thermal time constant. They take a certain amount of time to heat (and also to cool). For short periods, devices can handle considerably more power than their long term rating. The graph of Figure 2.7.11 , shows the power dissipation for single pulses. In some cases, these resistors can handle powers of an order of magnitude greater. For example, consider the type RPC0402 (bottom-most line). From the data sheet of Figure 2.7.9 this device is specified as having a long term rating of 0.2 watts. In contrast, the graph of Figure 2.7.11 shows it is capable of withstanding a single pulse of greater than 20 watts for 100 microseconds, just under 10 watts for a millisecond pulse and roughly 2 watts for a one-tenth second pulse.

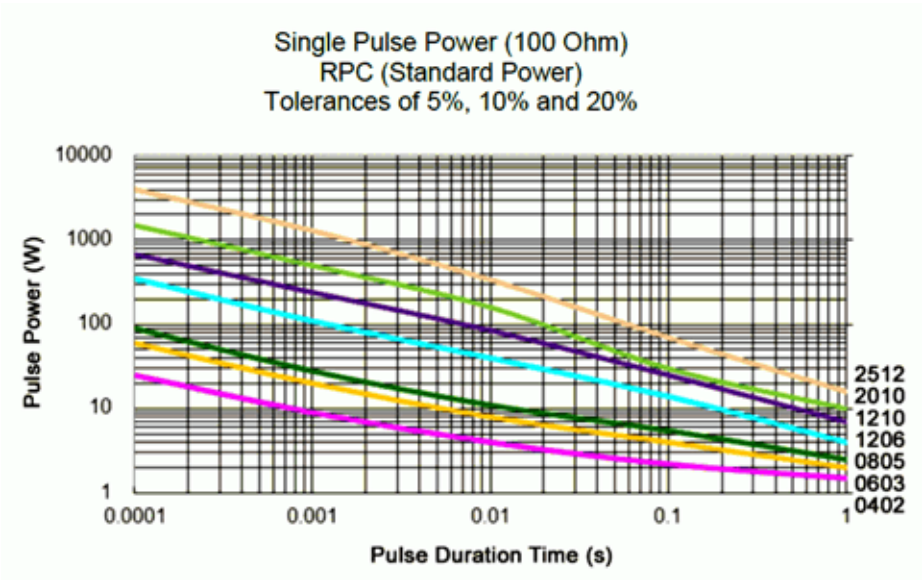

Figure 2.7.11 : Pulse power dissipation. Courtesy of Stackpole Electronics

Other Resistive Devices

Along with standard fixed resistors, there are several other kinds of resistive devices that have been designed to be sensitive to changes in their environment. Thus, they can serve as sensors because as their resistance changes, it impacts the flow of current and the resulting voltage. We will look at examples of this in upcoming work. Some of the environmental inputs include temperature, force and light levels.

Force Sensing Resistor (FSR)

The force sensing resistor consists of two layers of material with a nominal separation distance. It is presented as a flat membrane that is usually round or rectangular, and perhaps with an adhesive backing. An example of an FSR is shown in Figure 2.7.12 . With no force applied, the device shows an extremely high resistance, well into the megohms. As force is applied to the surface, the two layers come into better contact which decreases the net resistance. This is borne out in the graph of Figure 2.7.13 . The graph shows roughly a straight line response between resistance and force when plotted on a log-log scale. At the highest force levels, the resistance may drop to just a few hundred ohms.

Figure 2.7.12 : A force sensing resistor (FSR).

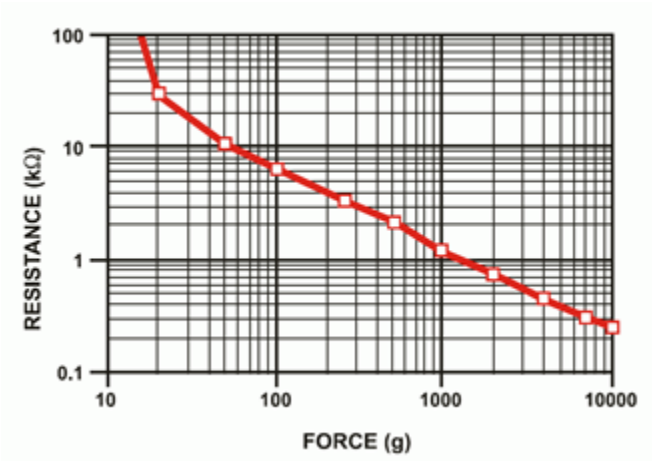

Figure 2.7.13 : FSR response curve. Courtesy of Interlink Electronics

Photoresistor

As their name implies, photoresistors are sensitive to changes in light level. They are also called LDRs, short for Light Dependent Resistor. Different materials may be used in their construction, but the most common is cadmium sulfide, CdS. As a consequence, photoresistors are sometimes generically referred to as “CdS cells”.

A photoresistor is shown in Figure 2.7.14 along with its corresponding resistance graph in Figure 2.7.15 . In total darkness the device exhibits a very high resistance. As light levels increase, the resistance decreases. As with the FSR, we see an reverse relation between the resistance and the environmental factor: as the environmental input increases (force, light level), the resistance does the opposite and decreases. And once again, we see a straight line when plotted with log-log scales. Technically, we refer to this as a negative relation because the slope of the plot line is negative.

Figure 2.7.14 : A photoresitor, or LDR.

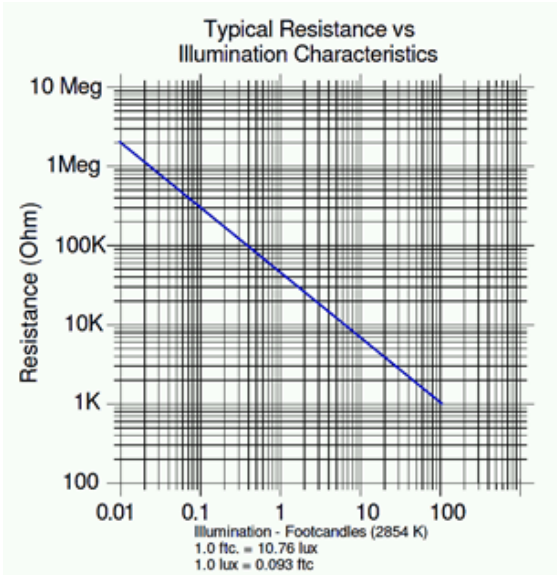

Figure 2.7.15 : Photoresitor response curve. Courtesy of Advanced Photonix

To put the brightness of the light into common terms, 0.01 foot-candles (roughly 0.1 lux) is equivalent to a clear moon-lit evening. At this level, the photoresistor is showing over 1 megohm of resistance. In contrast, 100 foot-candles (roughly 1000 lux) is equivalent to an overcast day (for reference, direct sunlight is perhaps 100 times stronger). At this level, the photoresistor's value has dropped to about 1000 ohms.

A point worth noting is that the light that the photoresistor “sees” is not necessarily the same as what a human sees. The sensitivity of the device at various wavelengths (i.e., colors) may differ starkly from human vision. In fact, differing materials exhibit different sensitivities at various wavelengths. Some of these may be wavelengths that the unaided human eye cannot see at all (infrared or ultraviolet, for example).

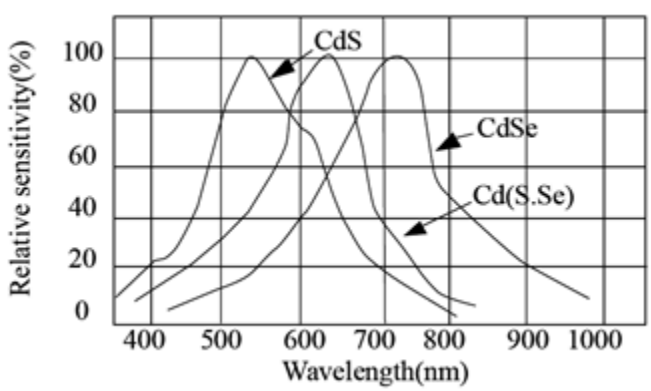

Figure 2.7.16 : Photoresitor sensitivity curves. Courtesy of Token Electronics

An example of sensitivity curves is shown in Figure 2.7.16 . Note the variations between the different materials, CdS being one

of the three (left side). The peak sensitivities vary as do the precise shapes. In practice, this means that some of these units will be more or less sensitive to certain colors than other units. The CdS curve indicates peak sensitivity of about 540 nm, which corresponds to green. In comparison, the CdSe (cadmium selenide) cell exhibits a peak of just over 700 nm, which corresponds to red. At some wavelengths, the relative response of one material may be no more than 10% of the response of a different material.

It is important to note that the use of cadmium, such as in CdS cells and the like, is severely restricted by the RoHS directive (see Chapter One).

Thermistor

A thermistor is a device whose resistance is a function of temperature. These devices are available in two basic types. Either PTC, for Positive Temperature Coefficient; or NTC, for Negative Temperature Coefficient. PTC devices show an increase in resistance as temperature increases and NTC devices show a decrease in resistance as temperatures rise. Ideally, these are linear relationships with the plots showing straight lines. The reality is that linearity can only be assumed across fairly narrow ranges of temperature. For wider ranges, there will be noticeable deviation from a straight line as the curve is logarithmic in nature. A basic NTC thermistor is shown in Figure 2.7.17 .

Figure 2.7.17 : NTC thermistor.

Generic thermistor performance graphs are shown in Figure 2.7.17 with the idealized straight line response at top and the more realistic non-linear response below. Thermistors will be specified in terms of their room temperature resistance (usually taken to be 25 °C) along with their sensitivity which is denoted as beta (β). The larger the value of beta, the steeper the curve and the greater the sensitivity. The curves labeled Beta 2 show increased sensitivity, meaning that there will be a greater change in resistance for a certain change in temperature.

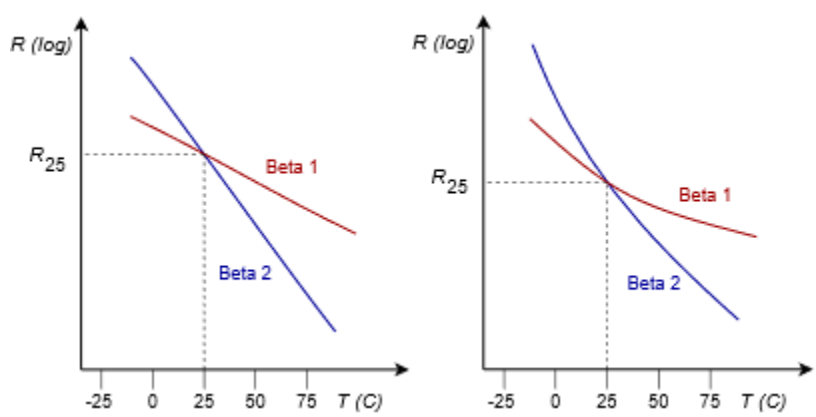

Figure 2.7.18 : NTC thermistor response curves: Ideal (top) and real.

The following equation can be used to determine the resistance of a thermistor at some other temperature of interest with greater accuracy than using a simple linear approximation. All that is needed is a reference temperature and corresponding resistance, the beta value and the new temperature of interest. Using a reference temperature of 25 °C:

$$R_T = R_{25} e^{\beta\left(\frac{1}{T} - \frac{1}{298.15}\right)} \tag{2.7.3}$$

Where

R_T is the resistance at the new kelvin temperature, T,

R_{25} is the resistance at 25 °C,

T is the temperature of interest in kelvin,

β is the device beta.

Note that the constant "298.15" in Equation 2.7.3 is equivalent to the reference temperature of 25 °C (0 K is –273.15 °C). Consequently, if a different reference point is used, simply insert the new reference temperature in its place and use the corresponding resistance in place of R_{25}.

Varistor

Varistors are used as limiting devices, primarily to suppress unwanted voltage spikes in electronic equipment. The varistor is a unique device in that it has a highly nonlinear current-voltage characteristic. This is shown in Figure 2.7.19 . Remember, when plotted with the voltage on the horizontal axis, the slope of the line represents the conductance. Consequently, the varistor shows a region of near zero conductance or extremely high resistance (the horizontal section), and two sections that are nearly vertical, which indicate extremely high conductance or near zero resistance. This characteristic allows the varistor to act as a limiting device.

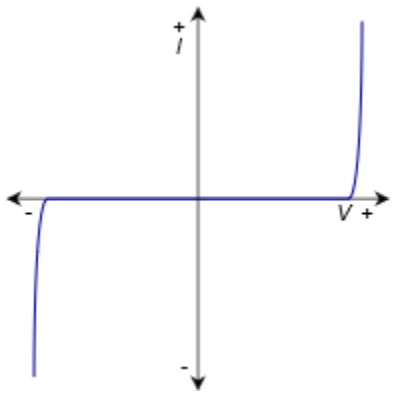

Figure 2.7.19 : Current-voltage characteristic of a varistor

Imagine that a lightning strike effects a local power line. This will create a sudden but short-lived spike in the voltage. A normal 120 volt wall outlet normally produces regular peaks of approximately 170 volts. A lightning strike might add several hundred volts to this. The resulting voltage could be so high that it would damage electronic equipment attached to the outlet. To alleviate this problem, a varistor can be placed across the incoming voltage lines. The vertical break point voltages would be set for a value just over 170 volts, the normal maximum. Under typical circumstances the varistor would see a voltage in its horizontal region and thus behave as a very high resistance. It would drain virtually no current from the outlet, and consequently it would have no impact on the rest of the circuitry. On the other hand, if a large spike hits the line, the varistor will swing into the vertical region, show a much reduced resistance, and act as a shunting path for the spike's current. It will effectively clamp the voltage to some maximum rated value. Of course, the varistor has to absorb the energy presented by that spike, and important parameters of a varistor include the amount of energy that it can absorb (in joules) and its maximum current capacity, along with the maximum clamping voltage.

Strain gauge

The strain gauge is device used to measure mechanical strain on some item. Strain occurs when an item is under compression (its length gets shortened or squished) or when it's under tension (it gets elongated or stretched). Both of these things can happen simultaneously, for example when a bar is experiencing bending or torque (one side is under compression while the other is under tension). Engineering strain is defined as the change in length over the initial length. If an item experiences too much strain, it can become permanently deformed or fail (for example, the landing gear in an aircraft or the suspension components in a car). Simply put, strain gauges are used to measure this effect.

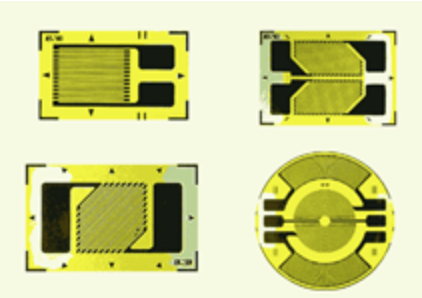

Figure 2.7.20 : Strain guages. Courtesy of Zemic

A strain gauge is made typically of very thin metal foil in a specific pattern. See Figure 2.7.20 for example shapes. Typically, the shape is that of a series of fine lines connected in a back-and-forth pattern, the two ends terminating into larger pads for soldering on connecting leads. In operation, the strain gauge is glued to the material being investigated, for example, a metal bar that is part of a suspension system. As they are glued together, the strain gauge experiences the same deformation as the metal bar. Any deformation will create changes in the length of the strain gauge's foil wires as well as their frontal surface area. For example, under tension, the length increases while the surface area decreases (the surface area must decrease because the foil wire has finite mass). Recalling the basic resistance relation, Equation 2.7.2, both of these effects will cause the resistance to rise. The greater the strain under tension, the greater the rise in resistance. The opposite will occur under compression and the resistance will decrease. These changes in resistance are not large but they are sufficient to alter the associated voltage or current which can then be calibrated to determine the applied strain.

This page titled 2.7: Resistance and Conductance is shared under a CC BY-NC-SA 4.0 license and was authored, remixed, and/or curated by James M. Fiore via source content that was edited to the style and standards of the LibreTexts platform.

2.8: Instrumentation and Laboratory

At this point we need to shift gears and focus on a few practical aspects, the sort of things we might deal with in an electrical laboratory. It is one thing to discuss abstract concepts such as voltage and current, and quite another to deal with them in the real world.

Sources

For starters, let's consider the idea of power sources, that is, devices that can produce reliable, stable and constant voltages and/or currents. As mentioned previously, a battery approximates an ideal voltage source. The problem, of course, is that batteries only last a finite period of time and their voltage begins to sag after being used for a while. Also, their voltage is fixed and not adjustable. An adjustable voltage source would be much more flexible in a laboratory.

To address this problem, most electrical labs use a variable DC voltage supply in place of simple batteries. These sources typically are adjustable from 0 to 25 volts or higher and can produce one amp of current or more. An example is shown in Figure 2.8.1 . This particular unit has two main outputs plus a third auxiliary output. All outputs are independent, meaning that the voltage of each can be set independent of the others. Further, the two main outputs offer programmable current limiting. This feature can be thought of as a programmable fuse or circuit breaker: it limits the amount of current a circuit can draw to some preselected level. It is worth noting that even if a source is rated for, say, two amps, that only refers to the maximum value that can be drawn; that is not the current that it would produce by default.

Figure 2.8.1 : A multi-output adjustable DC voltage supply.

Multiple output power supplies are usually wired in a “floating” form, meaning that the negative terminal is not tied back to earth ground. A separate connector is presented (usually green) that is tied back to earth ground if it is needed. Having floating supplies gives the user much more flexibility. For example, two floating supplies can be wired in sequence to create a single higher voltage. They can also be wired to present a positive voltage and a negative voltage. The unit shown in Figure 2.8.1 also features twin LED displays for voltage and current for each of the main outputs. It is worthwhile to point out that the color coding used for electronic equipment is not the same as that used for residential wiring in North America. The electronics standard is that the common or ground terminal is black while the “hot” or positive terminal is red.

While there are a large number of makes and models of affordable laboratory DC voltage sources available, the same is not true of DC current sources. This is not usually a problem. As we shall see in upcoming work, it is possible to emulate a constant current source using a voltage source and some attached components.

Schematic Symbols

Clearly, it would not be practical to create circuit drawings (schematics) using pictures of the actual devices. Instead, we use simple schematic symbols to represent them. There are two widely used schemes: ANSI (American National Standards Institue) and IEC (International Electrotechnical Commission). For many electronic components the ANSI and IEC versions are the same, but there are notable differences. ANSI tends to dominate in North America (surprise!) while IEC tends to dominate elsewhere.

Figure 2.8.2 shows the symbols for DC current and voltage sources. The long bar at the top of the voltage source is the positive terminal while the shorter bar at the bottom denotes the negative terminal. For the current source, the arrow points in the direction of conventional current flow. If the source is adjustable, it will often be shown with a diagonal arrow drawn through it. In some schematics, a DC voltage source will simply be drawn as a “connection dot” or node with the voltage labeled. It is assumed that the other end of the source is tied back to the system common or ground.

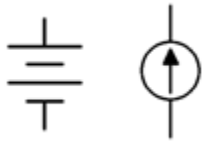

Figure 2.8.2 : Voltage (left) and current source schematic symbols.

Speaking of ground, there are three different symbols used for a circuit's common connection point. These are: earth ground, chassis ground and signal or digital ground. These are shown in Figure 2.8.3 . Earth ground is used when the circuit common is tied back to true earth (e.g., to the third pin on an AC receptacle). Chassis ground is a more generic term which would represent a common reference point that did not go back to true earth (e.g., a portable device). Finally, digital or signal ground is used to distinguish between common points where they might be separated for noise or interference concerns (e.g., a sensitive analog signal common separate from a digital logic common).

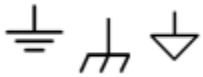

Figure 2.8.3 : Schematic symbols for ground. (L-R) earth, chassis, signal.

The symbols for resistors and other resistive devices vary considerably between ANSI and IEC versions. ANSI uses a zig-zag line while IEC uses a simple rectangle. These are illustrated in Figure 2.8.4 . This text will focus on using the ANSI standard symbols for resistors. One final note about component values: As decimal points are easy to lose on photocopies or small display screens, engineering notation multipliers are sometimes placed in the position of a decimal point. For example, a 4.7 k Ω resistor may be listed as simply 4k7.

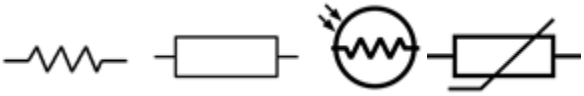

Figure 2.8.4 : Schematic symbols for resistive devices. (L-R) resistor (ANSI), resistor (IEC), photoresistor, thermistor.

Measurement – The Digital Multimeter

Perhaps the most handy measurement device in the electrical laboratory is the digital multimeter, or DMM for short. These handheld devices are used to measure voltage, current and resistance; and depending on model may have other measurement capabilities as well. A pair of typical units are shown in Figure 2.8.5 .

Figure 2.8.5 : Digital Multimeters.

Beyond the measurement functions of the DMM, perhaps the single most important characteristic is its accuracy. It is important to remember that no measurement device is perfect and there is always some uncertainly between what the device indicates and the true value of the parameter being measured. As a DMM uses a digital display, it has both finite range and resolution. As you might guess, the more digits the meter can display, the greater its potential accuracy. DMMs are commonly described as having 3 1/2 digits, 3 3/4 digits, 4 1/2 digits, and so on for their displays. A fractional digit is simply a leading digit that cannot go up to nine. By common use, the term "1/2 digit" means that the leading digit can be no more than one. A 3/4 digit specification typically means that the first digit can't be larger than three (it might also be four or even five as this terminology is not standardized)[1]. To clarify, a 3 1/2 digit display is also referred to as a "2000 count" display. This is because there are 2000 possible values, from 0000 to 1999. Similarly, a 4 3/4 digit display is called a 40,000 count display because it has 40,000 possible values, from 00,000 to 39,000.

Using a 2000 count display as an example, the next question to ask is where to place the decimal point. This display could be set up to read from 0 to 1999 volts. For convenience, we would call that a "2000 volt scale", meaning that the maximum voltage that can be displayed is approximately 2000 volts. With an otherwise perfect meter, the error can be as large as 1 volt because we have no way of indicating fractions of volts. To solve this limitation we could add other scales by shifting the decimal point. For instance, we could make a nominal "20 volt scale" which would range up to 19.99 volts, giving us resolution down to 10 millivolts. We could go further and make a 2 volt scale with a maximum of 1.999 volts and 1 millivolt resolution as well as a 200 millivolt scale with a maximum of 199.9 millivolts yielding a resolution of one-tenth millivolt. We might need to measure very large as well as very small voltages, so the scale setting is user adjustable.

It is important to use the lowest scale that can display the desired value otherwise a loss of resolution and accuracy will occur. For example, if we need to measure a voltage somewhere around five or six volts with this 2000 count meter, it should be set for the 20 volt scale. A lower setting, such as a 2 volt or 200 millivolt scale, will not be able to display the measurement and instead will indicate an overload condition (usually by flashing an abbreviated error message such as "Err" or "OL"). On the other hand, if the higher 2000 volt scale is used, the meter will only be able to resolve the measurement to the nearest volt. Indeed, this is so important that some meters have auto-ranging, meaning that they will automatically choose the scale setting to give the best result. The accuracy specification for a DMM is in two parts. The first part is the percent deviation around the measured value. The second part is the added number of counts.

The accuracy specification for a typical 3 1/2 digit meter might be $\pm$ 2% of reading plus 3 counts. To determine the range of possible values for a reading, first determine the percentage of the reading and then add in the number of counts (i.e., one count represents the resolution of the meter on that particular scale). The resulting value represents the uncertainty of the reading. It can also be visualized as an "error envelope" surrounding the displayed value. Somewhere in that envelope is the true value measured. This is shown in the following examples.

Example 2.8.1

A 3 1/2 digit (2000 count) DMM has an accuracy specification of $\pm$ 2% of reading plus 3 counts. On its 20 volt scale it measures 5.01 volts. Determine the uncertainty in this measurement.

On its 20 volt scale this meter can display up to 19.99 volts. Therefore its resolution, or single count value, is 0.01 volts. Thus, 3 counts is 0.03 volts. To this we add 2% of the reading of 5.01 volts, or 0.1002 volts. The total is 0.1302 volts or 130.2 millivolts. This represents the error envelope on either side of the reading. That is, the true value is within the range of 5.01 volts $\pm$ 130.2 millivolts, or somewhere between 4.8798 volts and 5.1402 volts. In other words, the ambiguity is about 130 millivolts out of about 5 volts.

Example 2.8.2

A 4 3/4 digit (40,000 count) DMM has an accuracy specification of $\pm$ 0.1% of reading plus 8 counts. On its 4 volt scale it measures 3.0035 volts. Determine the uncertainty in this measurement.

On its 4 volt scale this meter can display up to 3.9999 volts. Therefore its resolution is 0.0001 volts or 0.1 millivolts. 8 counts is 0.8 millivolts. To this we add 0.1% of the reading of 3.0035 volts, or 3.0035 millivolts. The total is 3.8035 millivolts. This represents the error envelope on either side of the reading and the true value is somewhere between 2.9996965 volts and 3.0073035 volts. The ambiguity here is just a few millivolts out of about 3 volts. Clearly, this meter's level of ambiguity is much reduced compared to the meter used in Example 2.8.1 .

References

[1]You might rightly ask how it is that having just one numeral out of nine counts as “half” and three out of nine counts as “three fourths”. Well, that's marketing for you.

This page titled 2.8: Instrumentation and Laboratory is shared under a CC BY-NC-SA 4.0 license and was authored, remixed, and/or curated by James M. Fiore via source content that was edited to the style and standards of the LibreTexts platform.

2.9: Summary

In this chapter we have examined the basic quantities that make up an electrical circuit. Charge, measured in coulombs, is a characteristic of subatomic particles; protons being positively charged and electrons being negatively charged. Like charges repel and opposite charges attract. The Bohr model of an atom shows that electrons are contained in energy shells and a single electron in the outermost shell is only loosely bound to an atom. With an applied external energy source these electrons (and thus their charge) can be moved from place to place. The rate of charge movement over time is called current and is measured in amps. Energy is defined as the ability to do work and is measured in joules. Voltage is defined as the energy required to move a charge divided by that charge, with units of volts. Power is the rate of energy usage over time and is measured in watts.

Some materials allow the easy flow of current and are called conductors. In contrast, materials that inhibit the flow of electrical current are called insulators. The measure of this inhibition is called resistance and has units of ohms. Its reciprocal is called conductance and is measured in siemens.

Resistors are devices designed to restrict the flow of current. They are available in a wide range of resistive values, power ratings, and physical sizes and configurations. Common resistors use a series of colored stripes, or color code, to signify their resistance value and tolerance.

Efficiency is the ratio of useful power output to applied power input, normally expressed as a percentage. The higher a system's efficiency, the less energy it will use, the less it will cost to run, and generally the less heat it will generate. If the system is battery powered, higher efficiency leads to longer battery life. Battery capacity is measured in amp-hours. All other factors being equal, the higher the amp-hour rating, the longer the battery will last.

The digital multimeter, or DMM, is a versatile tool for measuring voltage, current, resistance, and possibly other circuit or electrical device parameters. The accuracy of a DMM is dependent on its resolution which is in turn set by the number of digits used, or its total count. The count specification is added to a percent tolerance to arrive at a worst case error value for some specific reading.

Review Questions

1. Describe the Bohr atomic model.

2. How does charge relate to current and voltage?

3. What is the relationship between energy and power?

4. What is the relationship between resistance and conductance?

5. Define efficiency. How does it relate to operating cost?

6. Define count in terms of a digital multimeter accuracy specification.

7. Describe the resistor color code and its use.

This page titled 2.9: Summary is shared under a CC BY-NC-SA 4.0 license and was authored, remixed, and/or curated by James M. Fiore via source content that was edited to the style and standards of the LibreTexts platform.

2.10: Exercises

Analysis

1. A 2000 count digital multimeter has an accuracy specification of $\pm$1%. If it reads a voltage of 34.2 volts, what is the possible range of the true voltage?

Answer 1 33.858V to 34.542V

2. A 4000 count digital multimeter has an accuracy specification of $\pm$0.5%. If it reads a current of 142.0 mA, what is the possible range of the true current?

3. Determine the expected voltage scales for a standard “three and a half” digit meter between 1 and 1000 volts.

Answer 3 2 Volt, 20Volt, and 200 Volt scales

4. Determine the expected current scales for a standard “three and a half” digit meter between 1 mA and 1 amp.

5. A 2000 count digital multimeter has an accuracy specification of $\pm$2% and $\pm$5 counts. If it reads a voltage of 7.00 volts, what is the possible range of the true voltage?

Answer 5 6.81V to 7.19V

6. A 50000 count digital multimeter has an accuracy specification of $\pm$0.1% and $\pm$4 counts. If it reads a voltage of 7.00 volts, what is the possible range of the true voltage?

7. What is the charge in coulombs of a million million (10^{12}) electrons?

Answer 7 $1.602 \times 10^{-7} Coulombs$

8. What is the charge in coulombs of 10^{15} electrons?

9. How many electrons would be needed for a charge of 20 coulombs?

Answer 9 $1.248 \times 10^{20} electrons$

10. How many electrons would be needed for a charge of 1 microcoulomb?

11. If a charge of 2 coulombs passes through a wire in 5 seconds, what is the current?

Answer 11 0.4 Amps

12. If a charge of 300 millicoulombs passes through a wire in 0.1 seconds, what is the current?

13. How much charge must be transferred in 0.1 seconds in order to achieve a current of 5 amps?

Answer 13 0.5 Coulombs

14. How much charge must be transferred in 20 seconds in order to achieve a current of 10 microamps?

15. Determine the resulting voltage if it takes 2 joules to move 10 coulombs of charge.

Answer 15 0.2 Volts

16. Determine the voltage if 15 joules is used to move 0.5 coulombs of charge.

17. How much energy is required to create a 10 volt potential difference with a 2 coulomb charge?

Answer 17 20 Joules

18. How much energy is required to create a 50 millivolt potential difference with a 0.1 coulomb charge?

19. What is the wattage equivalent of two horsepower (2 hp)?

Answer 19 1492 Watts

20. What is the horsepower equivalent of 1000 watts?

21. If a device draws 2 amps of current from a 12 volt battery, determine the power delivered.

Answer 21 24 Watts

22. If a device draws 10 milliamps of current from a 1.5 volt battery, determine the power delivered.

23. A 2 hp motor draws 1800 watts from its source. Determine its efficiency.

Answer 23 82.9%

24. A 5 hp motor draws 4.5 kw from its source. Determine its efficiency.

25. An audio power amplifier is rated for 500 watts of maximum audio output at an efficiency of 80%. Determine the amount of wasted power.

Answer 25 125 Watts

26. A compressor draws 10 amps of current from a 120 volt source. Its rated output is 1 hp. Determine the efficiency.

27. An application requires a battery to deliver 15 mA for at least 200 hours. Determine the required amp-hour rating (assume the battery can supply 100% of its energy).

Answer 27 3Ah

28. Determine the required rating for a battery to deliver 0.8 A for at least 30 hours.

29. A certain 12 volt battery has a rating of 6 Ah. Determine the expected battery life using a 5 mA draw. Assume 100% energy usage.

Answer 29 1200 hours

30. A certain AA battery has a rating of 800 mAh. Determine the expected battery life using a 20 mA draw.

31. Assume that a certain piece of material has a resistance of 80 ohms. Determine the new resistance if the length of the piece is doubled and no other parameters are changed.

Answer 31 160Ω

32. Assume that a certain piece of material has a resistance of 2 k ohms. Determine the new resistance if the width and height of the piece are doubled and no other parameters are changed.

33. Assume that a certain piece of material has a resistance of 4 ohms. Determine the new resistance if the resistivity is doubled and no other parameters are changed.

Answer 33 8Ω

34. Assume that a certain piece of material has a resistance of 10 k ohms. Determine the new resistance if the length, width and

height of the piece are all halved.

35. A certain material has a resistivity of 100 ohm-centimeters. Determine the resistance of a piece that is 1 cm wide, 0.5 cm high and 6 cm long.

Answer 35 1200Ω

36. A certain material has a resistivity of 2000 ohm-centimeters. Determine the resistance of a piece that is 2 mm wide, 4 mm high and 10 mm long.

37. A 40 ohm resistor has dimension of 0.4 cm wide by 0.2 cm high by 1 cm long. Determine the resistivity in ohm-centimeters.

Answer 37 $3.2\Omega \cdot cm$

38. A 5000 ohm resistor has dimension of 5 mm wide by 3 mm high by 6 mm long. Determine the resistivity in ohm-centimeters.

39. A resistor with the color code yellow-violet-red-silver has a measured value of 4806 ohms. Is this resistor within tolerance? As a percentage, how far is it from the nominal value?

Answer 39 yes, +2.26%

40. A resistor with the color code orange-orange-yellow-gold has a measured value of 33.9 k ohms. Is this resistor within tolerance? As a percentage, how far is it from the nominal value?

41. A resistor with the color code brown-black-orange-silver has a measured value of 9980 ohms. Is this resistor within tolerance? As a percentage, how far is it from the nominal value?

Answer 41 yes, -0.2%

42. A resistor with the color code green-blue-black-gold has a measured value of 50 ohms. Is this resistor within tolerance? As a percentage, how far is it from the nominal value?

43. Determine the value of the resistors pictured in Figure 2.10.1 (left-to-right: red-black-yellow, blue-gray-orange, red-violet-red-silver).

Answer 43 $200k\Omega, 68k\Omega, 2.7k\Omega$

44. Determine the value of the resistors pictured in Figure 2.10.2 (left-to-right: red-red-orange-gold, brown-black-red-gold, yellow-violet-orange-silver).

45. Determine the value of the resistors pictured in Figure 2.10.3 (left-to-right: orange-orange-green-silver, white-brown-black-silver, orange-white-brown-gold).

Answer 45 $3.3M\Omega, 91\Omega, 390\Omega$

46. Determine the value of the resistors pictured in Figure 2.10.4 (left-to-right: silver-orange-violet-yellow, green-blue-yellow-gold, gold-black-orange-yellow).

47. Determine the maximum and minimum allowed values of the resistors pictured in Figure 2.10.1 .

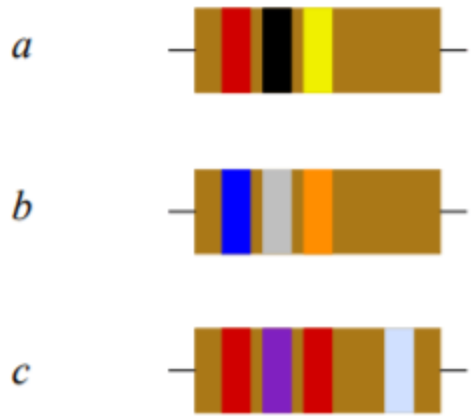

Figure 2.10.1

Answer 47

- 160k to 240k
- 54.4k to 81.6k
- 2.43k to 2.97k

48. Determine the maximum and minimum allowed values of the resistors pictured in Figure 2.10.2 .

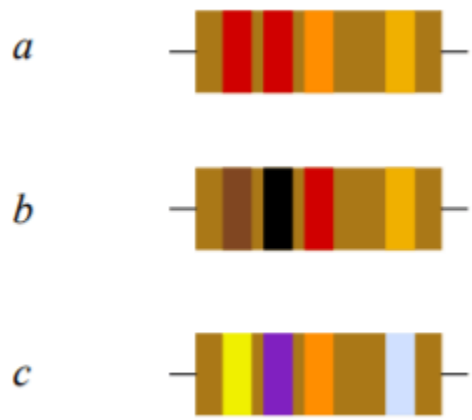

Figure 2.10.2

49. Determine the maximum and minimum allowed values of the resistors pictured in Figure 2.10.3 .

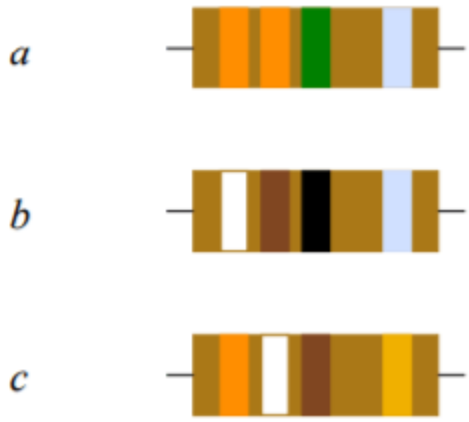

Figure 2.10.3

Answer 49

- 2.97M to 3.63M
- 81.9 to 100.1
- 370.5 to 409.5

50. Determine the maximum and minimum allowed values of the resistors pictured in Figure 2.10.4 .

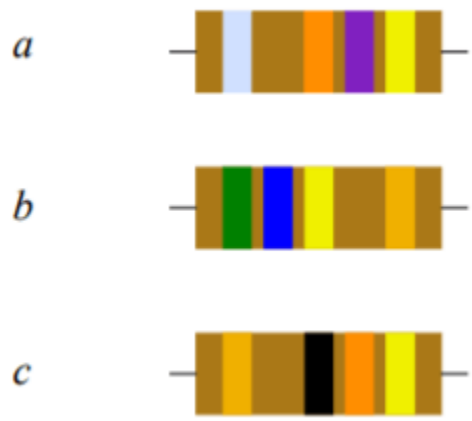

Figure 2.10.4

Design

51. Determine the resistor color code for the following ohmic values using 5% tolerance:

a) 47 Ω

b) 22 kΩ

c) 390 kΩ

d) 2.2 kΩ

e) 560 Ω

Answer 51

a. yellow-violet-black-gold
b. Red-red-orange-gold
c. orange-white-yellow-gold
d. brown-red-oragne-gold
e. violet-green-brown-gold

52. Determine the resistor color code for the following ohmic values using 10% tolerance:

a) 56 Ω

b) 33 kΩ

c) 470 kΩ

d) 1.2 kΩe) 750 Ω

Challenge

53. A radio transmitter is rated for 100 watts of maximum output at an efficiency of 90%. If it is fed from a 120 volt source, determine the current draw.

Answer 53

- Input power: $frac100W0.9 = 111.11W$
- Current: $I = fracPV = frac111.11120 = 0.93A$

54. A certain 75 watt incandescent bulb produces 71 watts worth of heat and the remainder in the form of light. Determine its efficiency as a lighting device and its efficiency as a heating device.

55. Assume it takes an 1800 watt toaster 3 minutes to toast a bagel "just right". If you toast a bagel every morning for a year and electricity costs 15 cents/kWh, how much will you have spent in that year to toast bagels?

Answer 55

- Minutes/year = $3 \times 365 = 1095\ \ minutes$
- Hours/year = $1095\ \ minutes \times \frac{1hour}{60minutes} = 18.25\ \ hours$
- Energy = $1.8kW \times 18.25\ \ hours = 32.85kWh$
- Cost = $32.85kWh \times 15\frac{cents}{kWh} + = \$4.93$

56. Assume that you can buy standard 60 watt incandescent light bulbs for 50 cents each and that each has an expected life span of 1000 hours. In comparison, you can buy an LED light bulb that produces the same amount of light but only consumes 7 watts. The LED bulbs cost $5.50 each and have an expected life of 20,000 hours. Assuming electricity costs 14 cents/kWh, determine the total cost of running incandescent lights versus LEDs for 40,000 hours.

57. Given a 1.5 volt battery with a 500 mAh rating, how much current can it produce continuously for 25 hours?.

58. Given a 9 volt battery with a 100 mAh rating, determine the total energy storage in joules.

59. A 2000 count DMM with $\pm$1% accuracy is used to measure the resistance of a spool of AWG 22 wire. If the measurement is 4.50 Ω, determine the length of the wire and the possible inaccuracy (in feet or meters).

60. A length of AWG 26 wire is attached to one end of a length of AWG 32 wire. The total length of the two wires is 200 meters. Determine the length and resistance of each piece if the total resistance is 75 Ω.

This page titled 2.10: Exercises is shared under a CC BY-NC-SA 4.0 license and was authored, remixed, and/or curated by James M. Fiore via source content that was edited to the style and standards of the LibreTexts platform.

3: SERIES RESISTIVE CIRCUITS

Learning Objectives

After completing this chapter, you should be able to:

- Describe the differences between conventional current flow and electron flow.
- Identify series resistive circuits that include one or more voltage sources or a single current source.
- Compute equivalent resistance, and component and node voltages for series resistive circuits.
- Compute circulating current and component powers for series resistive circuits.
- Utilize Ohm's law, Kirchhoff's voltage law (KVL) and the voltage divider rule (VDR) to aid in the analysis of series resistive circuits.
- Identify and describe the usage of potentiometers and rheostats.
- Utilize computer simulation tools to investigate and verify basic electric circuit quantities such as component voltages.

3.1: Introduction

3.2: Conventional Current Flow and Electron Flow

3.3: The Series Connection

3.4: Combining Series Components

3.5: Ohm's Law

3.6: Kirchhoff's Voltage Law

3.7: Series Analysis

3.8: Potentiometers and Rheostats

3.9: Summary

3.10: Exercises

This page titled 3: Series Resistive Circuits is shared under a CC BY-NC-SA 4.0 license and was authored, remixed, and/or curated by James M. Fiore via source content that was edited to the style and standards of the LibreTexts platform.

3.1: Introduction

With the requisite background information of the first two chapters now behind us, in this chapter we shall begin our analysis of electrical circuits. Here we will introduce the most simple configuration, the series loop. It can contain any number of resistors and voltage sources, or in place of the voltage sources, a single current source. We shall examine how to determine the current flow through each component, the voltage across each component and the power either dissipated or generated by each component. Other practical issues will also be examined, such as the effect of component tolerance on the circuit parameters.

This page titled 3.1: Introduction is shared under a CC BY-NC-SA 4.0 license and was authored, remixed, and/or curated by James M. Fiore via source content that was edited to the style and standards of the LibreTexts platform.

3.2: Conventional Current Flow and Electron Flow

Before we dive into series circuits we need to consider an interesting question involving the direction of current flow. Does it flow from positive to negative or from negative to positive? For that matter, does it even make a difference as far as our analyses will be concerned?

Benjamin Franklin (pictured in Figure 3.2.1) began experimenting with the phenomenon of electricity in 1746. In 1752 he performed his famous kite experiment proving that lightning is a form of electricity by capturing charge from storm clouds in a leyden jar (an early form of an electrical charge storage device)[1]. At this time the modern concept of an atomic model with electrons and protons did not exist and electricity was conceived of as a sort of fluid. Franklin surmised that the “electrical flow” moved from positive to negative. This idea was accepted and became the conventional view. Today we call this idea conventional current flow. In this model, current flows from a more positive voltage to a less positive voltage. We know now that the electron is the charge carrier in metals and the electrons travel in the reverse direction. Essentially, Franklin guessed wrong. Electrons move from a lower potential to a higher potential. We call this model electron flow. For most work, engineers and technicians use conventional flow, although in some cases, such as the explanation of semiconductors, electron flow is easier to visualize for some people. In short, conventional flow exists for historical reasons, and it is the model used for most analyses, including this text.

Figure 3.2.1 : Benjamin Franklin: Technically incorrect but it doesn't really matter.

You might think the current direction would make a big difference in an analysis; after all, it certainly makes a big difference if you drive a car in the wrong direction. It turns out that both forms will achieve the desired results, we just have to be consistent with the usage.

To better understand this, consider that the movement of a net negative charge in one direction can be thought of as a movement of a net positive charge in the other direction. That is, the movement of an electron creates a “hole” where it used to be and that hole is net positive. This is illustrated in Figure 3.2.2 . Here we start at the top with a tube of identical marbles, all pushed to the right. In each step below it we move a marble to the left, mimicking the flow of electrons in a circuit. When we reach the bottom, each marble has been pushed left by one place. We can also arrive at the bottom drawing by simply taking the right-most marble in the top drawing and inserting it to the extreme left by jumping over the other three marbles. Here's the important bit: instead of imagining the marbles moving left, we can also think in terms of “negative space” and imagine the empty slot moving to the right. That's hole flow. The two views are functionally identical as they lead to the same outcome.

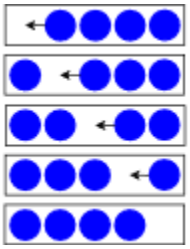

Figure 3.2.2 : Electron versus hole flow.

References

[1]It is worth noting that Franklin's kite was not struck by lightning. If it had been, he likely would have been killed. The hemp string that was used for the kite was sufficiently wet from rain that it was possible to transfer charge from the atmosphere to the leyden jar, and subsequently to a metal key which would emit a spark.

This page titled 3.2: Conventional Current Flow and Electron Flow is shared under a CC BY-NC-SA 4.0 license and was authored, remixed, and/or curated by James M. Fiore via source content that was edited to the style and standards of the LibreTexts platform.

3.3: The Series Connection

The word circuit comes from the Latin root circ, meaning “ring” or “around”. An electrical circuit consists of at least one ring or loop through which current flows. For example, if we have a battery attached to a lamp as in Figure 3.3.1 , the current exits the battery, flows through the lamp, and then returns to the other side of the battery creating a loop or completed circuit. Without a path back to the battery, current will not flow. Thus, if we cut one of the wires connecting the battery and lamp, there is no path for current and no current flows. This is referred to as an open circuit and is a common fault that occurs when electronic systems are dropped or struck forcefully. Obviously, this will tend to render the circuit unusable. In this example, the lamp will not illuminate. The opposite of the open circuit is the short circuit. In a short circuit, an unintended alternate path for current flow exists and this also can create a malfunction. In the case of our battery and lamp, a short circuit can occur if a piece of wire or metal accidentally fell across the terminals of the lamp. The current would then have a high conductance (i.e., low resistance) path around the lamp. The vast majority of the current would take this low resistance path instead of the higher resistance path presented by the lamp. The result would be that the lamp would not light. In either the open or short case, the light does not function but there is an important difference: for the short circuit, excessive current will flow out of the battery because there is little to resist the flow of current. Thus, the battery will be drained very quickly. For the open, no current flows and thus the battery is not drained.

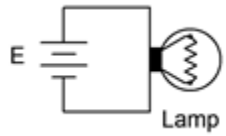

Figure 3.3.1 : Battery and lamp circuit.

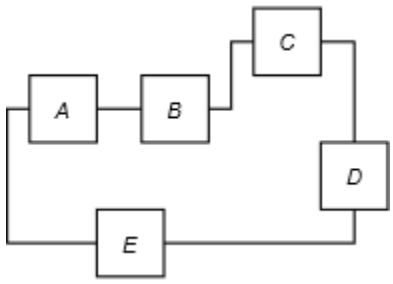

Figure 3.3.2 : A generic series configuration.

Series connections are not limited to just two components. In general, a series connection is any connection of components configured such that the current through each component must be the same. This is illustrated in Figure 3.3.2 . Inside each of the lettered boxes would be a component such as a resistor or a voltage source. Note that for each component, there is one entrance point and one exit point. No matter which box you pick, the current flowing through it must be the same as the current flowing into the next box or out of the preceding box, and it doesn't matter if you follow this path in a clockwise or counterclockwise fashion. Thus, this entire configuration is a series connection. The idea that current is consistent throughout should be selfevident. After all, the only way the current through, say, item B could be different from that flowing through item C or D is if some of it somehow “disappeared” along the way by magic. It is important to remember that consistent current is the hallmark feature defining a series connection:

$$\text{The current is the same everywhere in a series connection.} \tag{3.3.1}$$

It is possible that only a portion of a circuit exhibits a series connection. Consider the more complex diagram presented in Figure 3.3.3 . Some of these items are in series and some are not. For example, items A and B are in series with each other but not in series with the remaining items. Why? Because if we imagine the current flowing through A and then through B they must be the same, however, once beyond B, the current could split and flow down other branches: a portion entering C, a portion entering D and the remainder flowing into E. On the other hand, items C and F are in series with each other because whatever current is flowing through one of them must be flowing through the other. Thus, items A and B are in series with each other and items C and F are in series with each other, although all four are not in series as a group.

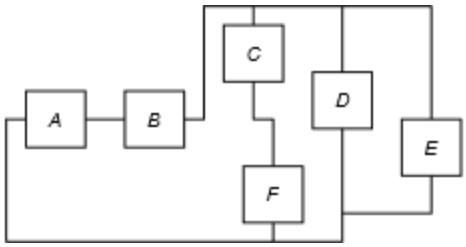

3.3.3 : A more complex configuration.

It is possible that no two items in a circuit are strictly in series. We will see examples of this in upcoming chapters. Further, just because the currents through two items happen to be the same, that does not necessarily mean they are in series. Identical currents could be just a by-product of the component values chosen. For example, even if items D and E in Figure 3.3.3 have the same numeric value for current, we would not say that they are in series, anymore than we would say that any two people with the same last name would have to be siblings.

This page titled 3.3: The Series Connection is shared under a CC BY-NC-SA 4.0 license and was authored, remixed, and/or curated by James M. Fiore via source content that was edited to the style and standards of the LibreTexts platform.

3.4: Combining Series Components

Typically, a series connection will include multiple resistors. Referring back to the resistance equation presented in Chapter 2, Equation 2.7.2, we can see that resistors in series add.

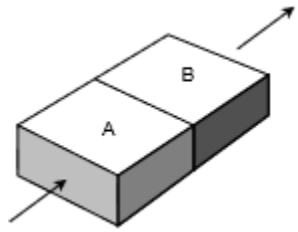

Figure 3.4.1 : Resistors in series.

$$R = \frac{\rho l}{A}$$

If we consider two identical resistors placed in series, one after the other as in Figure 3.4.1 , the effective length would double while keeping the resistivity and area unchanged. The combined result would be a doubling of the resistance of just one of them. If we then generalize this to two arbitrary resistors of identical resistivity and area, the lengths would dictate the resistance of each, and the combined lengths would then reflect the resistance of the pair. We can generalize this further for N resistors. Thus we find that the equivalent resistance of a group of series resistors is their sum:

$$R_{Total} = R_1 + R_2 + R_3 + \cdots + R_N \tag{3.4.1}$$

Consequently, as resistors in series add, total resistance may be found by summing the individual resistors.

Example 3.4.1

A string of resistors is placed in series as shown in Figure 3.4.2 . Their values are: 120 Ω, 390 Ω, 560 Ω and 470 Ω. Determine the equivalent series value.

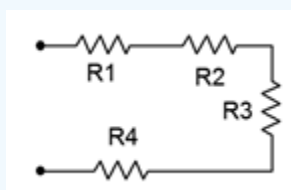

Figure 3.4.2 : Resistor string for Example 3.4.1 .

$$R_T = R_1 + R_2 + R_3 + R_4$$

$$R_T = 120\Omega + 390\Omega + 560\Omega + 470\Omega$$

$$R_T = 1540\Omega$$

Multiple voltage sources in series may also be added, however, polarities must be considered as opposing voltages partially cancel each other (i.e., adding a negative). This concept is presented in the next example.

Example 3.4.2

Determine the equivalent series value of the voltage sources presented in Figure 3.4.3 .

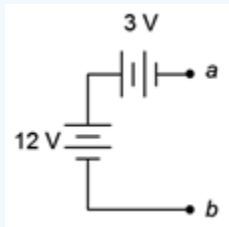

Figure 3.4.3 : Voltage sources in series.

If we use point b as our reference, by inspection the top of the 12 volt source is 12 volts above point b (reminder, the long bar denotes the positive terminal). Also, by inspection, the right side of the 3 volt source (point a) is negative with respect to its left side. As the left side of this source is connected to the positive terminal of the 12 volt source, then it too must be 12 volts above point b. As its right side is 3 volts less than this side, point a must be 3 volts less than 12 volts, or 9 volts above point b . Thus V_{ab} = 9 volts.

Chasing this further, if the 3 volt source had been flipped so that it had the same polarity as the 12 volt source (positive toward the right) then V_{ab} = 15 volts. If the 12 volt source had been flipped (positive toward bottom) with the 3 volt source as drawn originally, then V_{ab} = –15 volts. If both sources had been flipped then V_{ab} = –9 volts. Finally, if point a had been taken as the reference then these four potentials would have the opposite polarity because, by definition, $V_{ba} = -V_{ab}$.

In contrast to voltage sources, differing current sources are not placed in series as they would each attempt to establish a different series current, a practical impossibility. Refer to Figure 3.4.4 as a reminder!

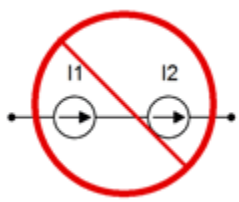

Figure 3.4.4 : Placing current sources in series generally is evil.

This page titled 3.4: Combining Series Components is shared under a CC BY-NC-SA 4.0 license and was authored, remixed, and/or curated by James M. Fiore via source content that was edited to the style and standards of the LibreTexts platform.

3.5: Ohm's Law

In Chapter 2, the concept of resistance was introduced using the following generality:

$$Effect = \frac{Cause}{Oppostion}$$

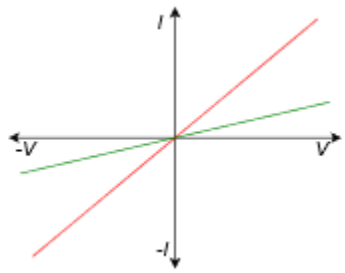

Figure 3.5.1 : Current-voltage plots for simple resistors.

To review, the cause is a voltage source, the opposition is the resistance, and the effect is the resulting current. If the item the current passes through is linear, such as the simple resistors depicted in Figure 3.5.1 , then this relationship can be rewritten as:

$$I = \frac{V}{R}$$

or more commonly, solved for the voltage and expressed as:

$$V = I \times R \tag{3.5.1}$$

This is called Ohm's law, and is named in honor of Georg Ohm, a researcher from the early nineteenth century. It is, along with Kirchhoff's laws that we shall see shortly, one of the most important and useful equations available for the analysis of DC electrical circuits. For the sake of completeness, Ohm's law can also be visualized in terms of resistance:

$$R = \frac{V}{I}$$

All three forms of this equation are useful. For example, we can use the first version if we have a known voltage applied across a resistor and we want to determine the resulting current. Similarly, Equation 3.5.1 can be used to find the voltage drop across a resistor if we know the current through it. Finally, we can use the last version if we need to set the current to a certain value and have to find the resistance required to do so.

Example 3.5.1

A 9 volt battery is used in series to power a 40 Ω resistor as shown in Figure 3.5.2 . Determine the circulating current. Also determine the minimum power rating for the resistor.

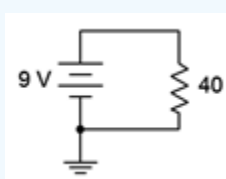

Figure 3.5.2 : Circuit for Example 3.5.1 .

$$I = \frac{V}{R}$$

$$I = \frac{9V}{40\Omega}$$

$$I = 0.225amps$$

From power law, Equation 2.5.3,

$$P = I \times V$$

$$P = 0.225A \times 9V$$

$$P = 2.025watts$$

Power could also be determined using V^2/R or I^2R. Try it. You should get the same result.

Computer Simulation

To verify the results of the preceding example, the circuit is entered into a simulator, as shown in Figure 3.5.3 . Multisim™ is used here, although any quality circuit simulator will do. Virtual DMMs are used to measure the current and voltage. Remember, current is the rate of charge flow and is measured at a single point; the middle of a connecting wire if you will. Consequently, the ammeter is inserted between the battery and resistor. In contrast, voltage is a potential difference which implies two points for the measurement, and thus, the voltmeter is placed across the resistor.

Note the voltage is exactly 9 volts as expected. The current is just shy of the expected 225 milliamps. This is due to the fact that all real world ammeters exhibit some finite internal resistance. This extra resistance, though very much smaller than the resistor, adds to the total resistance and thus slightly decreases the current. The simulator has been programmed to mimic this behavior and thus we see a very slight decrease in the current in the simulation, which is precisely the effect we would see in a proper physical lab.

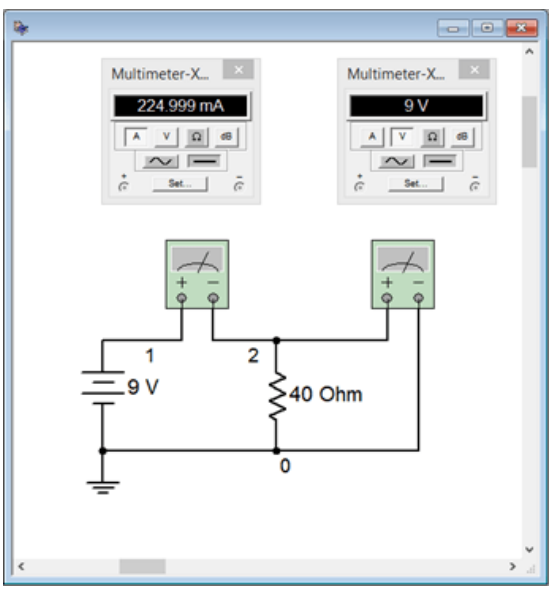

Figure 3.5.3 : The circuit of Example 3.5.1 in a simulator.

This simulation uses virtual instruments because they echo the layout of a physical lab and offer some familiarity. Unfortunately, they become cumbersome in larger circuits. We shall look at other, more direct, simulation techniques later in this chapter.

Example 3.5.2

Refer to the battery and lamp circuit shown back in Figure 3.3.1. Determine the resistance of the lamp if the current flowing through it is 300 mA and the battery voltage is 6 volts. Also determine the power dissipated by the lamp.

$$R = \frac{V}{I}$$

$$R = \frac{6V}{0.3A}$$

$$R = 20\Omega$$

From power law,

$$P = I^2 \times R$$

$$P = 0.3A^2 \times 20\Omega$$

$$P = 1.8watts$$

Let's continue with a couple of examples utilizing current sources.

Example 3.5.3

Determine the voltage developed across the resistor in the circuit of Figure 3.5.4 . Also determine the power dissipated.

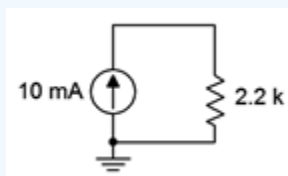

Figure 3.5.4 : Circuit for Example 3.5.3 .

$$V = I \times R$$

$$V = 10mA \times 2.2k\Omega$$

$$V = 22volts$$

From power law,

$$P = I^2 \times R$$

$$P = (10mA)^2 \times 2.2k\Omega$$

$$P = 0.22watts$$

Computational hint: don't forget the “milli” part of the current (milli squared is micro).

Example 3.5.4

Determine the resistor value required in the circuit of Figure 3.5.5 in order for the source to generate 24 watts of power.

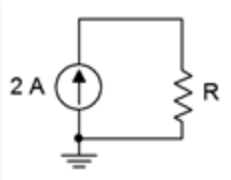

Figure 3.5.5 : Circuit for Example 3.5.4 .

First, note that power generated must equal power dissipated. Thus, the power generated by the source must equal the power dissipated by the resistor. From power law,

$$P = I^2 \times R$$

$$R = \frac{P}{I^2}$$

$$R = \frac{24W}{(2A)^2}$$

$$R = 6\Omega$$

As a crosscheck, note that Ohm's law indicates that a 6 Ω resistor would produce a 12 volt drop given a 2 amp current, and that 12 volts times 2 amps yields the expected 24 watts.

It is now time to move onto series circuits using multiple resistors and/or current sources.

This page titled 3.5: Ohm's Law is shared under a CC BY-NC-SA 4.0 license and was authored, remixed, and/or curated by James M. Fiore via source content that was edited to the style and standards of the LibreTexts platform.

3.6: Kirchhoff's Voltage Law

Along with Ohm's law, the key law governing series circuits is Kirchhoff's voltage law, or KVL. Named after nineteenth century German physicist Gustav Kirchhoff, this law states that the sum of voltage rises and voltage drops around a series loop must equal zero (the rises and drops having opposite polarities). Alternately, it may be reworded as the sum of voltage rises around a series loop must equal the sum of voltage drops. As a pseudo formula:

$$\sum V \uparrow = \sum V \downarrow \tag{3.6.1}$$

The Voltage Divider Rule (VDR)

An outgrowth of KVL is the voltage divider rule (VDR). In a series connection, the current is the same through each component. Thus, the voltage drops in a series connection must be directly proportional to the size of the resistances: the larger the resistor, the larger its voltage, and the larger its share of the total voltage applied to the series connection. Thus, the voltage across any resistor must equal the net supplied voltage times the ratio of the resistor of interest to the total resistance:

$$V_{Rx} = E \cdot R_X / R_{TOTAL} \tag{3.6.2}$$

In fact, Equation 3.6.2 is just a combination of two Ohm's law calculations into a single formula. The circulating current is equal to E/R_{TOTAL}. This current is then multiplied by the resistor of interest (R_X) to arrive at the voltage across that resistor (V_{Rx}). It is worth pointing out that “the resistor of interest” can, in fact, be the sum of multiple resistors in series. While VDR is not required for any particular analysis, it serves two purposes: first, it saves some time because it skips over the computation of current, and second, it reinforces the ideal of a proportional division of voltage in a series connection. For example, if there are two resistors in series and one of them is twice the size of the other, then it must be the case that the larger resistor sees twice the voltage of the smaller resistor.

This page titled 3.6: Kirchhoff's Voltage Law is shared under a CC BY-NC-SA 4.0 license and was authored, remixed, and/or curated by James M. Fiore via source content that was edited to the style and standards of the LibreTexts platform.

3.7: Series Analysis

Ohm's law, Kirchhoff's voltage law, the voltage divider rule and series component combinations are the tools we will use to solve general series circuit problems. There are multiple techniques for analyzing these circuits:

- If all voltage source and resistor values are given, the circulating current can be found by dividing the equivalent voltage by the sum of the resistances. Once the current is found, Ohm's law can be used to find the voltage drops across individual resistors. Alternately, the individual voltage drops can be found using the voltage divider rule. At that point, power law can be used to find the power dissipation in each resistor or the power developed by the source(s).
- If the circuit uses a current source instead of a voltage source, then the circulating current is known and the voltage drop across any resistor may be determined directly using Ohm's law.
- If the problem concerns determining resistance values, the basic idea will be to use these rules in reverse. For example, if a resistor value is needed to set a specific current, the total required resistance can be determined from this current and the given voltage supply. The values of the other series resistors can then be subtracted from the total, yielding the required resistor value. Similarly, if the voltages across two resistors are known, as long as one of the resistance values is known, the other resistance can be determined using either the voltage divider rule or Ohm's law.

Often, there will be more than one way to solve a given problem. We shall refer to these as solution paths. No particular path is “more correct” than any other, although some paths may be shorter or easier in a given case, as will be illustrated next.

Example 3.7.1

Determine the voltage V_b (i.e., the voltage across the 100 Ω resistor) in the circuit of Figure 3.7.1 . Also determine the circulating current.

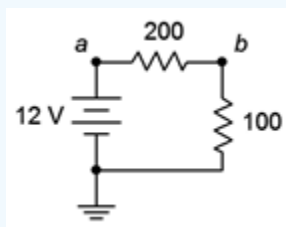

Figure 3.7.1 : Circuit for Example 3.7.1 .

First, note that there is a single voltage source that will create a clockwise current flowing through the two resistors. KVL says that the combined drops across those resistors must equal the rise of the source, or 12 volts. One solution path involves first finding the total resistance. Dividing this into the source voltage will yield the current. Ohm's law can then be used to determine the resistor voltage.

$$R_T = R_1 + R_2$$

$$R_T = 200\Omega + 100\Omega$$

$$R_T = 300\Omega$$

$$I = \frac{E}{R_T}$$

$$I = \frac{12V}{300\Omega}$$

$$I = 40mA$$

$$V_b = I \times R_2$$

$$V_b = 40mA \times 100\Omega$$

$$V_b = 4 \text{ volts}$$

A second solution path involves first finding the resistor voltage via the voltage divider rule. The current can then be found via Ohm's law.

$$V_b = E\frac{R_2}{R_T}$$

$$V_b = 12V\frac{100\Omega}{300\Omega}$$

$$V_b = 4 \text{ volts}$$

$$I = \frac{V_b}{R_2}$$

$$I = \frac{4V}{100\Omega}$$

$$I = 40mA$$

Computer Simulation

Let's verify the preceding example using a computer simulation. Instead of using virtual instruments, we shall use a more direct route, namely a listing of node voltages. A node voltage is the voltage at a given point with respect to some other point, normally ground, as in V_b in the prior example. Note that as we treat connecting wires ideally (having no resistance), a node is the entire connection wire, not a specific location on it. Normally, simulators will automatically number each node in a circuit with ground being node 0. This method skips the entire business of inserting virtual meters in the circuit and reduces schematic clutter.

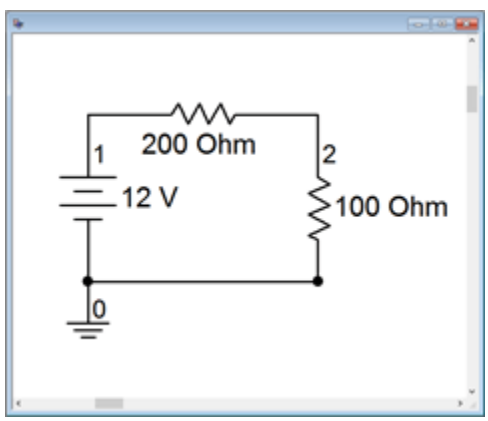

Figure 3.7.2 : The circuit of Example 3.7.1 in the simulator.

Note that ground is node 0, the power supply connection to the first resistor is node 1 and the connection between the two resistors is node 2. Thus, node 2 is V_b. A DC operating point analysis is performed. The results are shown in a separate output window, as depicted in Figure 3.7.3 . The values are as expected and with no loading effects as might be seen with virtual instruments.

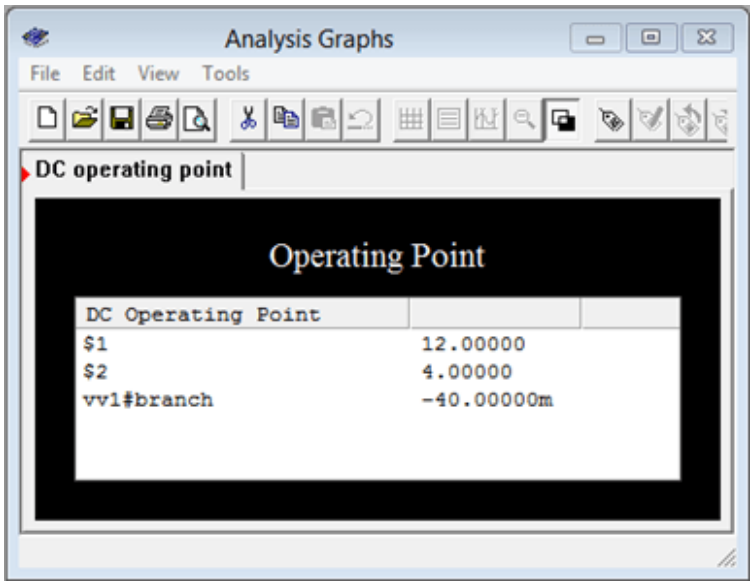

Figure 3.7.3 : Simulation results for the circuit of Figure 3.7.2 .

Example 3.7.2

Determine the voltage V_a (i.e., the voltage across the current source) in the circuit of Figure 3.7.4 .

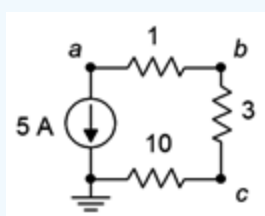

Figure 3.7.4 : Circuit for Example 3.7.2 .

Given the direction of the current source, the current will flow counterclockwise. This produces voltage drops (plus to minus) left to right across the 10 Ω, bottom to top across the 3 Ω, and right to left across the 1 Ω resistor. This means that node a is negative with respect to ground (i.e., the voltage keeps dropping across the resistors as we travel counterclockwise from ground, indicating that the resulting potential keeps getting more and more negative with respect to ground). To find V_a, we may simply sum the resistors and then use Ohm's law to determine their combined voltage drop, which of course, must equal the voltage rise from the current source.

$$R_T = R_1 + R_2 + R_3$$

$$R_T = 1\Omega + 3\Omega + 10\Omega$$

$$R_T = 14\Omega$$

$$V_a = -I \times R_T$$

$$V_a = -5A \times 14\Omega$$

$$V_a = -70 \text{ volts}$$

One practical point when designing circuits is to appreciate the variations in current and voltage produced by component tolerances. For example, in the preceding problem, we determined that there will be 70 volts across the current source, but this assumes that the resistor values are exactly as stated. In the previous chapter we discovered that all resistor values will vary

somewhat, and we grade this variation as a percent tolerance. Thus, if the true resistor values are off a bit, we would expect this to impact the associated voltages. Often, we would like to determine worst case values such as a maximum voltage or a minimum current. Sometimes these conditions occur when all resistors are at their maximum or minimum value. For example, the maximum value of source voltage in the previous problem occurs when all of the resistor values are at their maximum. This is not always the case, though. Sometimes the minima and maxima are achieved with odd combinations, such as one resistor being at maximum and another being at minimum. For instance, in the circuit used for Example 3.7.1 , V_b will be at minimum when R_2 is at minimum and when R_1 is at maximum. This can be verified easily using VDR.

Computer Simulation

Along with worst case, we might also like to know the sort of typical spread we get on a particular parameter using normal component variations. This can be performed in a simulator and it is usually called Monte Carlo Analysis or something similar. Basically, the simulator computes a series of simulation runs, each with component values chosen randomly within the specified tolerances of the chosen components, mimicking the effect of pulling the components out of a parts bins. To illustrate the Monte Carlo technique, the circuit of Example 3.7.2 is entered in a simulator as shown in Figure 3.7.5 .

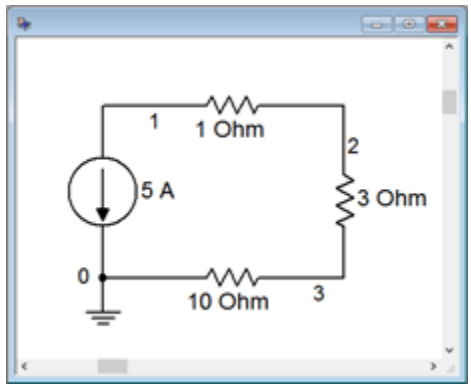

Figure 3.7.5 : The circuit of Example 3.7.2 in the simulator.

The resistors are given 10% tolerances. Five runs are specified for node voltage 1 which is equivalent to V_a in the original circuit. The results are shown in Figure 3.7.6 . Note that the nominal value run indicates −70 volts as expected. The other runs show variations on this voltage, some above and some below the nominal result.

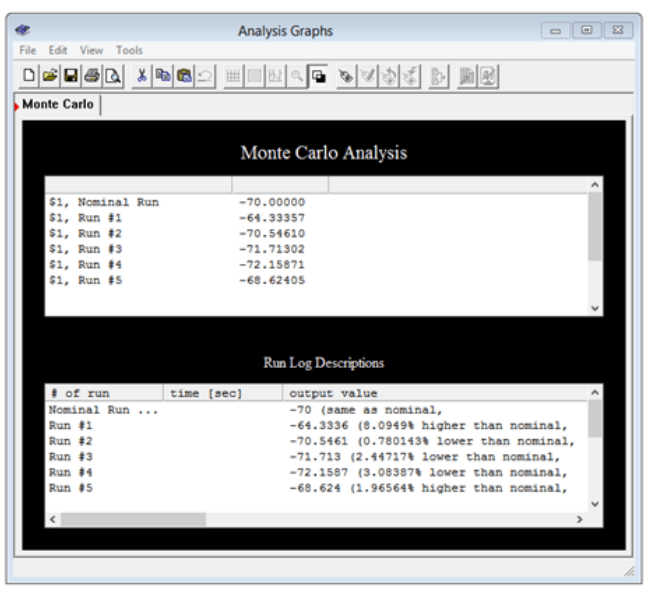

Figure 3.7.6 : Simulation results for the circuit of Figure 3.7.5 .

The Importance of Polarity

A key item of importance when analyzing series circuits, or indeed any electrical circuit, is noting the polarity of the voltages. This was apparent in Example 3.7.2 . Determining polarity for voltage sources is easy as their polarity is fixed (positive is always at the “long bar” and negative at the “short bar”). The polarity of any resistor will depend on the direction of current flow. To avoid confusion we will use the following standard:

- Where conventional current enters a resistor, we label this point with a plus sign, and where the current leaves, a minus sign.
- During analysis, moving from plus to minus is a voltage drop. That is, we are moving from a more positive or higher potential to a less positive or lower potential, thus “dropping” voltage.
- Similarly, traversing from minus to plus is a voltage rise.

Remember, Kirchhoff's voltage law states that the sum of voltage rises around a series loop must equal the sum of voltage drops.

Along with determining the voltage across single resistors, we are often interested in determining the voltage between arbitrary points in a circuit. These may span several components. It is imperative that we know the polarities of the individual voltages in order to determine the voltage between any two circuit points. The foregoing is illustrated using the series circuit schematic of Figure 3.7.7 .

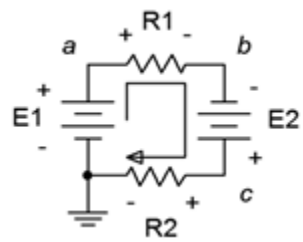

Figure 3.7.7 : A multi-source, multi-resistor series circuit.

Here, the two voltage sources, E_1 and E_2, aid each other because they are both trying to establish a clockwise current. This produces a net voltage of $E_1 + E_2$. Their polarities are fixed. The current direction will be as drawn because conventional current flows out of the positive terminal of a voltage source. The value of this current will be $(E_1 + E_2)/(R_1 + R_2)$ via Ohm's law. Knowing the direction of current, the polarities of the voltage drops across the two resistors may be found. The point where the current enters the resistor is positive, and negative where it exits. Once these are labeled, either Ohm's law or the voltage divider rule can be used to determine the voltages developed across the two resistors. Note that KVL states that the sum of these two resistor voltages must equal the net supplied voltage, or $E_1 + E_2$ in this case.

To determine the voltage from point a to point c, or V_{ac}, we start at point a and sum the voltage drops and rises until we get to point c. Here, the voltage across R_1 shows up as a drop (+ to – and taken as positive) and the voltage across E_2 shows up as a rise (– to +, and thus negative). The result is the voltage across R_1 minus the voltage across E_2. Depending on the specific values, the sum may wind up being either a positive or negative value. If it's positive, this signifies that point a is at a higher potential than is point c. Conversely, if it's negative, this signifies that point a is at a lower potential than is point c. If we reverse the order, starting at point c and moving to point a, or V_{ca}, we will wind up with the same voltage magnitude but the sign will flip. In the laboratory, the first point letter (the a in V_{ac}) is where the red lead of the voltmeter is connected and the second letter is where the black lead is connected. As a reminder, if a single connection point is used, as in V_a, the second letter is assumed to be ground. Thus, V_a is the voltage from point a to ground.

To illustrate the importance of voltage source polarity, consider the series circuit shown in Figure 3.7.8 . This circuit is identical to the previous circuit with the exception that the polarity of source E_2 has been flipped. This can have a drastic change on the resulting current and voltage drops. For example, if E_2 is larger than E_1, the net supplied voltage will be $E_2 - E_1$ and the direction of conventional current will be as drawn. Effectively, E_2 will be charging E_1. Note that this is opposite to the prior circuit. Because both the direction and the magnitude of the current have changed, the voltage drops and polarities of R_1 and R_2 will change. Consequently, any point-to-point voltage, such as V_{ac}, will also change.

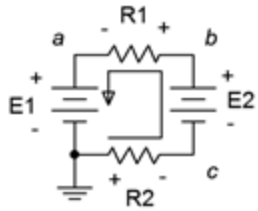

Figure 3.7.8 : Series circuit with altered polarity.

Example 3.7.3

Determine the voltages V_b and V_{ca} in the circuit of Figure 3.7.9 .

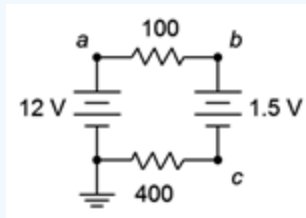

Figure 3.7.9 : Circuit for Example 3.7.3 .

The first step here would be to note that the two sources are in opposition. The result is an effective source of 10.5 volts with the same polarity as the 12 volt source, meaning it creates a clockwise current (rather the opposite of Figure 3.7.8). The total resistance will be the sum of the resistors, or 500 Ω. From this we can compute the current and then the voltage drops across each resistor. The polarity across the 100 Ω will be + to – left to right, and across the 400 Ω it will be + to – right to left. The polarities for both sources are top to bottom + to –. This is shown in Figure 3.7.10 .

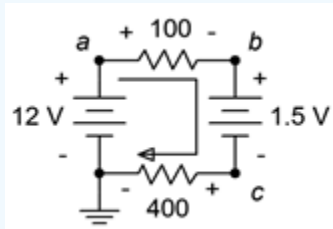

Figure 3.7.10 : Circuit for Example 3.7.3 with current direction and voltage polarities shown.

$$I = \frac{E_{Total}}{R_{Total}}$$

$$I = \frac{10.5V}{500\Omega}$$

$$I = 21mA$$

$$V_{100} = I \times R_{100}$$

$$V_{100} = 21mA \times 100\Omega$$

$$V_{100} = 2.1 \text{ volts}$$

$$V_{400} = I \times R_{400}$$

$$V_{400} = 21mA \times 400\Omega$$

$$V_{400} = 8.4 \text{ volts}$$

To find V_b we start at node b and work our way to ground, summing the potentials as we go. First we see the 1.5 volt source. Even though this is a source, it is still considered a voltage drop because the polarity is + to –. The polarity on the 400 Ω resistor is the same, so we add in its 8.4 volts for 9.9 volts total. That is, node b is 9.9 volts above ground.

For V_{ca} we proceed similarly. Starting at node c we move through the 1.5 volt source, but this time the polarity is – to +, or a rise of 1.5 volts (i.e., taken as negative). Now at node b, we continue through the 100 Ω resistor, also seeing a – to + polarity, or a rise of 2.1 volts. That adds up to 3.6 volts in magnitude, however, the starting node is lower than the ending node, thus V_{ca} = –3.6 volts. We could also say V_{ac} = 3.6 volts.

Back in Chapter 2 the height analogy for voltage was presented. This can be applied nicely in the prior example. You can think of ground as literally ground: the earth under your feet. Voltage rises would be like climbing up a ladder and voltage drops would be like climbing down a ladder. Think of each volt as being analogous to one foot or one meter. Thus, for V_b, you climb up the ladder 8.4 feet for the 400 Ω and another 1.5 feet for the 1.5 volt source, leaving you 9.9 feet (volts) above the ground. Therefore, V_b must be positive with respect to ground by 9.9 volts. This analogy works for voltages below ground as well: just think in terms of digging a hole. For voltages that are not referenced to ground, think of climbing up and down ladders, and then comparing the height of where you stopped to the height of where you started.

Precisely labeling every voltage polarity may seem like unnecessary work, but as circuit complexity increases so does the opportunity for polarity errors. This important step should not be omitted. Consider the following example which is only slightly more complex than the one preceding.

Example 3.7.4

Determine the voltage V_{be} in the circuit of Figure 3.7.11 .

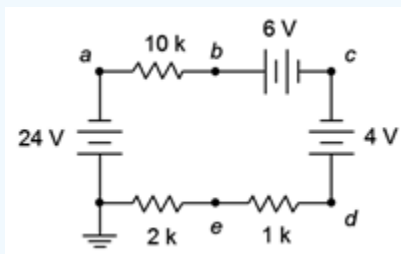

Figure 3.7.11 : Circuit for Example 3.7.4 .

The 24 volt and 6 volt sources are aiding each other while the 4 volt source is in opposition. The result is an effective supplied potential of 26 volts with a current circulating counterclockwise. The current direction and voltage polarities are shown in Figure 3.7.12 .

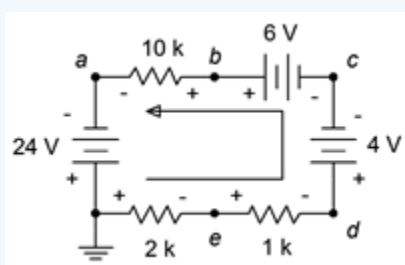

Figure 3.7.12 : Circuit for Example 3.7.4 with current direction and voltage polarities shown.

First, find the circulating current and then find the voltage drops across the resistors of interest. The total resistance is the sum of the three, or 13 kΩ.

$$I = \frac{E_{Total}}{R_{Total}}$$

$$I = \frac{26V}{13k\Omega}$$

$$I = 2mA$$

$$V_{10k} = I \times R_1$$

$$V_{10k} = 2mA \times 10k\Omega$$

$$V_{10k} = 20 \text{ volts}$$

Similarly, V_{2k} = 4 volts and V_{1k} = 2 volts with the polarities shown. To determine V_{be}, we can start at node b and move to node e by either going to the left or right side. We shall do both and compare the results.

Going to the left, we see + to – 20 volts across the 10 kΩ, – to + 24 across the left side source, and then + to – 4 volts across the 2 kΩ. This adds up to 0 volts, meaning that nodes b and e are at the same potential! Double checking by going down the right side we see + to – 6 volts for the top source, – to + 4 volts for the right side source, and finally – to + 2 volts for the 1 k Ω. This is also 0 volts, as expected.

It is important to understand that saying V_{be} = 0 volts does not imply that V_b or V_e are 0 volts. In fact, we can see that V_e is below ground by the voltage dropped across the 2 kΩ, or –4 volts. Similarly, V_b is above node a by 20 volts, and node a itself is 24 volts below ground given the polarity of the left side source. The result, once again, is –4 volts.

One more example to better illustrate the voltage divider rule in a larger circuit.

Example 3.7.5

Determine the voltages, V_b, V_d, and V_{bd} in the circuit of Figure 3.7.13 .

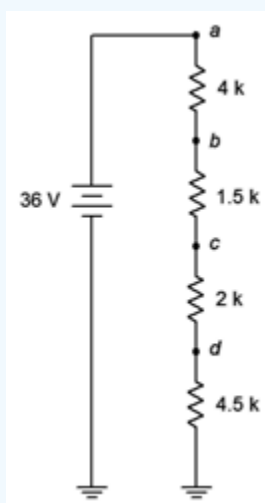

Figure 3.7.13 : Circuit for Example 3.7.5 .

While we could find the circulating current, then use Ohm's law to find the individual voltage drops, and finally add these pieces to find the potentials we're looking for, we shall instead focus on using VDR which may be faster.

The voltage divider rule states that the voltage across any resistor or group of resistors in a series loop is proportional to their resistance compared to the total resistance in that loop. The total resistance in this circuit is 12 kΩ. To find the voltage across any resistor or group of resistors, we simply make a ratio of the resistance of interest to the total resistance and multiply by the applied source voltage. Numbering the resistors R_1 at top to R_4 at bottom:

$$V_d = E\frac{R_4}{R_T}$$

$$V_d = 36V\frac{4.5k\Omega}{12k\Omega}$$

$$V_d = 13.5 \text{ volts}$$

$$V_b = E\frac{R_2 + R_3 + R_4}{R_T}$$

$$V_b = 36V\frac{8k\Omega}{12k\Omega}$$

$$V_b = 24 \text{ volts}$$

$$V_{bd} = E\frac{R_2 + R_3}{R_T}$$

$$V_{bd} = 36V\frac{3.5k\Omega}{12k\Omega}$$

$$V_{bd} = 10.5 \text{ volts}$$

There is another way to find V_{bd} here, and that's to notice that by definition $V_{bd} = V_b - V_d$. Therefore, V_{bd} = 24 volts – 13.5 volts, or 10.5 volts.

This page titled 3.7: Series Analysis is shared under a CC BY-NC-SA 4.0 license and was authored, remixed, and/or curated by James M. Fiore via source content that was edited to the style and standards of the LibreTexts platform.

3.8: Potentiometers and Rheostats

Some applications require the use of variable resistances. One example is a basic volume control, but other examples include equipment calibration and user adjustable parameters such as the bass, treble and balance controls on a home audio system. Adjustable resistances fall under two categories, potentiometers and rheostats. Generally, these would be the same physical device, with the application and usage determining its name.

A potentiometer is a resistor with three leads. Along with the typical end leads, there is a third lead referred to as the wiper or tap. This third lead is connected to a small metallic arm that makes contact with the resistive material and which can be moved along the length of the material. Potentiometers, or pots for short, often are formed in a circular shape (rotary travel) but they can also be in the form of a straight line (linear travel). Several different types are shown in Figure 3.8.1 . The larger circular units with shafts and the straight unit at the top are designed to be adjusted by the end user (appropriately stylish knobs being attached to said shafts, of course), while the smaller units are intended to be adjusted only by a technician (note the small adjustment screw slots intended to receive fine screwdrivers). The smaller units are designed to be mounted directly on a printed circuit board while the user adjustable units are mounted on a front panel, and have wiring lugs instead of straight leads.

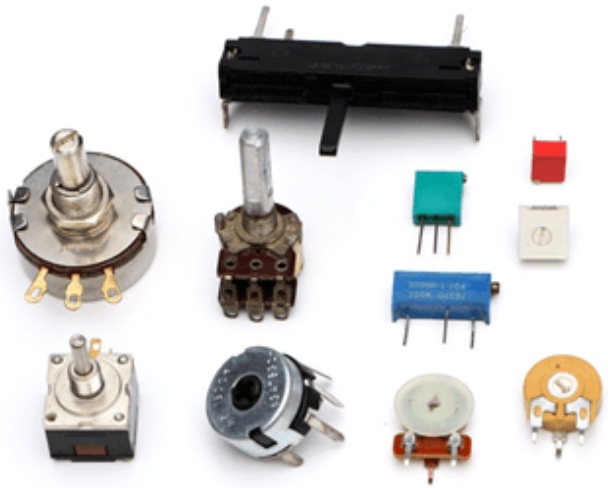

Figure 3.8.1 : A variety of potentiometers.

A cutaway view of a rotary panel mount pot with its back casing removed is shown in Figure 3.8.2 .

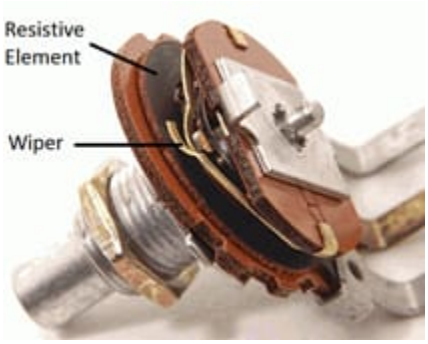

Figure 3.8.2 : Cutaway view of a rotary potentiometer.

Most circular potentiometers utilize a 270° rotation from end to end, also known as “3/4 turn”. Some precision pots used for calibration may use an internal worm gear to move the wiper and achieve 20 or more turns to shuttle the wiper from one end to

the other. This results in the ability to make very fine adjustments. The rectangular units in the right-center of Figure 3.8.1 are examples of this type.

The schematic symbol for a basic potentiometer is shown in Figure 3.8.3 . For convenience, its terminals are labeled A and B for the two ends, and W for the wiper arm.

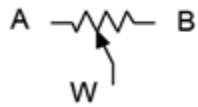

Figure 3.8.3 : Schematic symbol for a potentiometer, with labels.

A pot can be visualized as two resistors in sequence with a tap between them. The total resistance never changes. What does change is the ratio of the two pieces.

$$R_{AB} = R_{AW} + R_{WB} \tag{3.8.1}$$

At the extreme left of travel, R_{AW} will be 0 and R_{WB} will be equal to R_{AB}. At the extreme right, R_{AW} will equal R_{AB} and R_{WB} will be 0. If the wiper is precisely in the middle, then $R_{AW} = R_{WB} = R_{AB}/2$, and so on[1].

As a result, potentiometers are very useful as controllable voltage dividers (hence the name). Sometimes it is desirable to control two signals simultaneously from a single knob (e.g., one volume knob for a hi-fi stereo controls both the left and right channels). For this application, multiple resistive elements can be stacked and use a common shaft to control all of the wiper arms in tandem. These are known as ganged potentiometers. The tall, round unit in the left-center of Figure 3.8.1 is a dual gang pot. Note that it has a total of six solder lugs, three for the top element and three for the back element. Finally, unlike fixed resistors, pots are available in limited sizes. Typical values use multiples of 1 or 5 for the total resistance (for example, 1 kΩ, 5 kΩ, 10 kΩ, etc.) although a limited selection of other sizes are also available.

If only the wiper and only one of the two end terminals is used, then the device is referred to as a rheostat. Rheostats are often used to limit current. The value of the rheostat ranges from 0 up to the nominal value of the potentiometer. The schematic symbols for a rheostat are shown in Figure 3.8.4 . The ANSI symbol is shown at the left and the IEC version at the right.

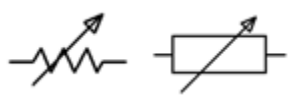

Figure 3.8.4 : Schematic symbols for a rheostat: ANSI (right) and IEC (left).

Time for a couple of examples.

Example 3.8.1

For the circuit depicted in Figure 3.8.5 , determine the maximum and minimum voltages for V_c, as well as its value when the pot is adjusted to midway (assume linear taper).

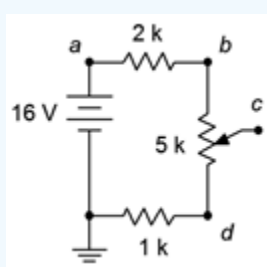

Figure 3.8.5 : Circuit for Example 3.8.1 .

The voltage divider rule states that the voltage across any resistor or group of resistors in a series loop is proportional to their resistance compared to the total resistance in that loop. The total resistance in this circuit is 8 kΩ. The voltage at node c will depend on the setting of the pot. The maximum voltage occurs when the wiper is all the way up, contacting node b.

$$V_c(max) = E\frac{R_i}{R_T}$$

$$V_c(max) = 16V\frac{6k\Omega}{8k\Omega}$$

$$V_c(max) = 12 \text{ volts}$$

For the minimum case, the wiper is set all the way down, contacting node d.

$$V_c(min) = E\frac{R_i}{R_T}$$

$$V_c(min) = 16V\frac{1k\Omega}{8k\Omega}$$

$$V_c(min) = 2 \text{ volts}$$

For the midway case, the pot can be treated as two 2.5 kΩ resistors.

$$V_c(mid) = E\frac{R_i}{R_T}$$

$$V_c(mid) = 16V\frac{3.5k\Omega}{8k\Omega}$$

$$V_c(mid) = 7 \text{ volts}$$

Note that the mid-position achieves a voltage midway between the extremes.

Thus the pot allows a range of voltage adjustment between a minimum of 2 volts and a maximum of 12 volts. The upper and lower fixed resistors serve to set these limits. The larger the values of these resistors compared to the value of the pot, the more narrow the range of adjustment. If these two resistors were excluded, the pot would allow the entire range of adjustment, from ground (0 volts) up to the power supply value of 16 volts.

Example 3.8.2

The potentiometer in the circuit of Figure 3.8.6 is connected as a rheostat. Determine the maximum and minimum current in the circuit.

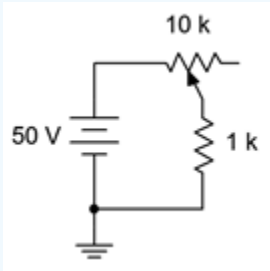

Figure 3.8.6 : Circuit for Example 3.8.2 .

The rheostat will present a resistance value between 0 Ω and 10 kΩ. The maximum current case occurs when the wiper is set to the extreme left, producing 0 Ω.

$$I(max) = \frac{E}{R_T}$$

$$I(max) = \frac{50V}{1k\Omega}$$

$$I(max) = 50mA$$

For the minimum case, the wiper is set all the way to the right, producing the full 10 kΩ.

$$I(min) = \frac{E}{R_T}$$

$$I(min) = \frac{50V}{11k\Omega}$$

$$I(min) = 4.545mA$$

References

[1]This 50/50 division is true if the pot has a linear taper, meaning that the resistance change is proportional to the wiper position. While this is typical, it is possible to have a taper that is not linear for special applications, such as audio taper. In these devices the resistance ratio at mid-position might be something like 10/90 instead of 50/50. This would be desired for a volume control because the human ear responds to changes in sound pressure in a logarithmic fashion. Using a linear taper pot would result in a volume control that is too sensitive at one end and yet produces hardly no change at the other end.

This page titled 3.8: Potentiometers and Rheostats is shared under a CC BY-NC-SA 4.0 license and was authored, remixed, and/or curated by James M. Fiore via source content that was edited to the style and standards of the LibreTexts platform.

3.9: Summary

Electrons are the charge carrier in metals. Their direction of travel, called electron flow, runs from the negative terminal of a voltage source to the positive terminal. The more commonly used conventional current flow runs from the positive terminal to the negative terminal. As conventional current enters a resistor, we mark this point as positive, and where it exits, negative. Thus, any voltage with a + to – polarity is deemed a voltage drop (which dissipates energy in a resistor). A polarity of – to + is deemed a voltage rise.

A series connection is any connection in which the current through one component must be identical to the current flowing through any other component in that connection. In other words, the current exiting any component must be the only current flowing into the next component in line; there can no intervening connections for current flow to or from other parts of the circuit. The equivalent resistance of a string of resistors placed in series is simply the sum of their resistance values. Consequently, the larger resistors dominate the equivalent value.

Ohm's law states that the voltage across a resistor must equal the product of its resistance and the current flowing through it.

Kirchhoff's voltage law (KVL) states that the sum of voltage rises around any series loop must equal the sum of voltage drops around that loop. Alternately, it may be stated as the sum of voltage rises and drops around a series loop must be zero, as the rises and drops have opposite polarity.

The voltage divider rule (VDR) is a convenient computational shortcut based on Ohm's law and KVL. It states that the voltage across any given resistor or group of resistors in a series connection is proportional to their resistance as a percentage of the total resistance. For example, if a resistor makes up one quarter of the total resistance in a series string of resistors, then that resistor will get one quarter of the total voltage applied to that string.

A potentiometer, or pot, is a three terminal variable resistance. The resistance of the entire device is fixed, however, a third lead is attached internally to an adjustable wiper, effectively creating two resistors. The sum of the two parts always equals the nominal value of the pot with the values of each piece being determined by the position of the wiper. Pots may be either rotary or linear (straight line) in motion and are used typically to adjust a voltage level. If the wiper and only one of the end terminals is used, the device is called a rheostat. A common application for a rheostat is the control of current.

Finally, computer simulation tools may be used to build virtual circuits and determine various parameters such as voltages and currents. They may use virtual instruments that echo real world instruments or they may use more direct means, offering results in the form of tables.

Review Questions

1. Describe the differences between electron flow and conventional current flow.

2. Define the term series connection.

3. How is the equivalent resistance for a string of series connected resistors computed? Is the process identical for series connected voltage sources?

4. Why are current sources generally not placed in series?

5. Define Ohm's law.

6. Define Kirchhoff's voltage law.

7. Define the voltage divider rule.

8. What is meant by a Monte Carlo analysis?

9. What is the difference between a potentiometer and a rheostat?

This page titled 3.9: Summary is shared under a CC BY-NC-SA 4.0 license and was authored, remixed, and/or curated by James M. Fiore via source content that was edited to the style and standards of the LibreTexts platform.

3.10: Exercises

Analysis

1. For the circuit of Figure 3.10.1 , determine the circulating current.

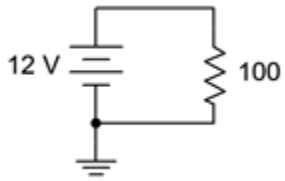

Figure 3.10.1

Answer 1

- 120mA

2. For the circuit of Figure 3.10.2 , determine the circulating current.

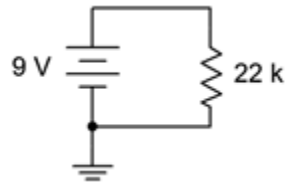

Figure 3.10.2

3. For the circuit of Figure 3.10.1 , determine the power dissipated in the resistor.

Answer 3

- 1.44W

4. For the circuit of Figure 3.10.2 , determine the power dissipated in the resistor.

5. Determine the voltage at the open terminals of Figure 3.10.3 .

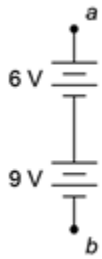

Figure 3.10.3

Answer 5

- 15 V

6. Determine the voltage at the open terminals of Figure 3.10.4 .

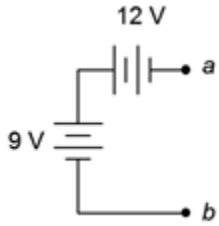

Figure 3.10.4

7. Determine the voltage at the open terminals of Figure 3.10.5 .

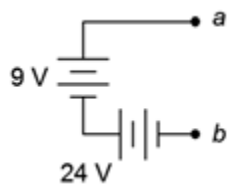

Figure 3.10.5

Answer 7

- 33 V

8. Determine the equivalent resistance of circuit shown in Figure 3.10.6 .

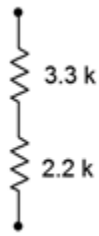

Figure 3.10.6

9. Determine the equivalent resistance of circuit shown in Figure 3.10.7 .

Figure 3.10.7

Answer 9

- $2.6k\Omega$

10. Determine the equivalent resistance of circuit shown in Figure 3.10.8 .

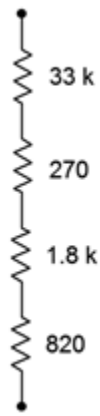

Figure 3.10.8

11. For the circuit of Figure 3.10.9 , determine the circulating current.

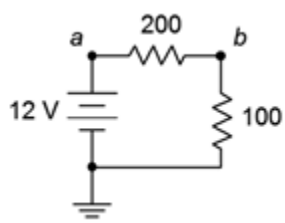

Figure 3.10.9

Answer 11

- 40 mA

12. For the circuit of Figure 3.10.9 , determine the voltages across each resistor and find V_{ab}.

13. Given the circuit of Figure 3.10.9 , determine the power dissipated by each resistor and the power delivered by the source.

Answer 13

- 320mW (200Ω)
- 160mW (100Ω)
- 480mW (source)

14. For the circuit of Figure 3.10.10 , determine the circulating current.

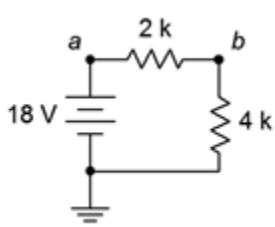

Figure 3.10.10

15. Given the circuit of Figure 3.10.10 , determine the voltages across each resistor and find V_{ba}.

Answer 15

- 6V($2k\Omega$)
- 12V($4k\Omega$)
- -6V (V_{ba})

16. For the circuit of Figure 3.10.10 , determine the power dissipated by each resistor and the power delivered by the source.

17. For the circuit of Figure 3.10.11 , determine the circulating current.

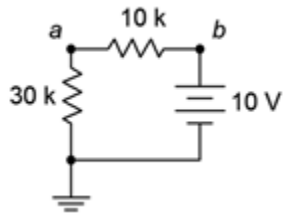

Figure 3.10.11

Answer 17

- 0.25 A

18. For the circuit of Figure 3.10.11 , determine the voltages across each resistor and find V_a.

19. For the circuit of Figure 3.10.12 , determine the circulating current and indicate all voltage polarities.

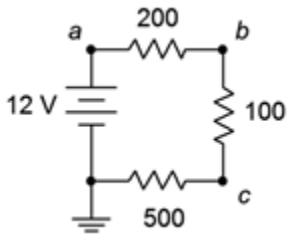

Figure 3.10.12

Answer 19

- I = 15mA
- V_{ab}: + on left, - on right
- V_{bc}: + on top, - on bottom
- V_c: + on right, - on left
- V_{src}: + on top, - on bottom

20. Given the circuit of Figure 3.10.12 , determine the voltages across each resistor and find V_b, V_{bc}, and V_{ca}.

21. For the circuit of Figure 3.10.12 , determine the power delivered by the source.

Answer 21

- P = 180mW

22. For the circuit of Figure 3.10.13 , determine the circulating current and indicate all voltage polarities.

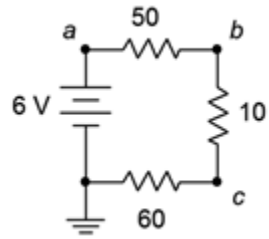

Figure 3.10.13

23. Given the circuit of Figure 3.10.13 , determine the voltages across each resistor and find V_c, V_{ac}, and V_a.

Answer 23

- $V_{50} = 2.5V$
- $V_{10} = 0.5V$
- $V_{60} = 3V$
- $V_c = 3V$
- $V_{ac} = 3V$
- $V_a = 6V$

24. For the circuit of Figure 3.10.13 , determine the power dissipated by the 10 Ω resistor.

25. For the circuit of Figure 3.10.14 , determine the circulating current and indicate all voltage polarities.

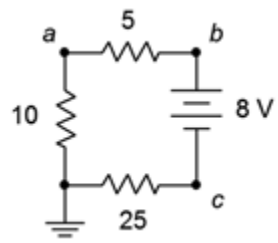

Figure 3.10.14

Answer 25

- I = 200mA
- V_5: + on right, - on left
- V_{10}: + on top, - on bottom
- V_{25}: + on left, - on right
- V_{src}: + on top, - on bottom

26. For the circuit of Figure 3.10.14 , determine the voltages across each resistor and find V_b, V_c, and V_{ca}.

27. Referring to the circuit of 3.10.15 , determine the voltages across each resistor and find V_b, V_c, and V_{ac}.

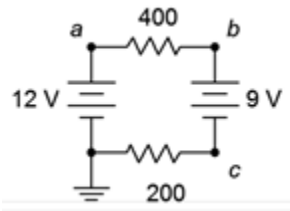

Figure 3.10.15

Answer 27

- $V_{400} = 2V$
- $V_{200} = 1V$
- $V_b = 10V$
- $V_c = 1V$
- $V_{ac} = 11V$

28. Referring to the circuit of Figure 3.10.15 , determine the circulating current and indicate all voltage polarities.

29. Given the circuit of 3.10.16 , determine the voltages across each resistor and find V_b, V_c, and V_{ac}.

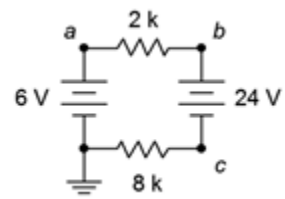

Figure 3.10.16

Answer 29

- $V_{2k} = 3.6V$
- $V_{8k} = 14.4V$
- $V_b = 9.6V$
- $V_c = -14.4V$
- $V_{ac} = 20.4V$

30. Referring to the circuit of Figure 3.10.16 , determine the circulating current and indicate all voltage polarities.

31. Given the circuit of 3.10.17 , determine the circulating current and indicate all voltage polarities.

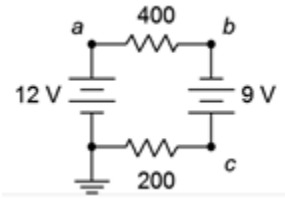

Figure 3.10.17

Answer 31

- I = 35mA
- V_{400}: + on left, - on right
- V_{200}: + on right, - on left
- V_{12Vsrc}: + on top, - on bottom
- V_{9Vsrc}: + on bottom, - on top

32. Referring to the circuit of Figure 3.10.17 , determine the voltages across each resistor and find V_b, V_c, and V_{ac}.

33. Given the circuit of 3.10.18 , determine the circulating current and indicate all voltage polarities.

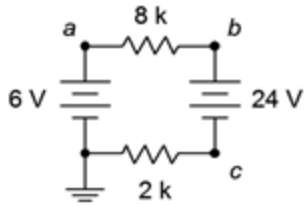

Figure 3.10.18

Answer 33

- I = 1.89mA
- V_{2k}: + on left, - on right
- V_{8k}: + on right, - on left
- V_{6Vsrc}: + on top, - on bottom
- V_{24Vsrc}: + on top, - on bottom

34. Referring to the circuit of Figure 3.10.18 , determine the voltages across each resistor and find V_b, V_c, and V_{ac}.

35. Using the voltage divider rule, determine the voltages V_b, V_c and V_{ac} for the circuit shown in Figure 3.10.19 .

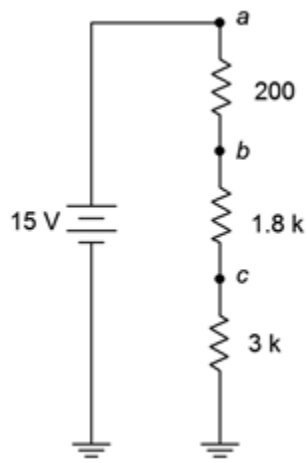

Figure 3.10.19

Answer 35

- $V_b = 14.4V$
- $V_c = 9V$
- $V_{ac} = 6V$

36. Using the voltage divider rule, determine the voltages V_b, V_c and V_{bd} for the circuit shown in Figure 3.10.20 .

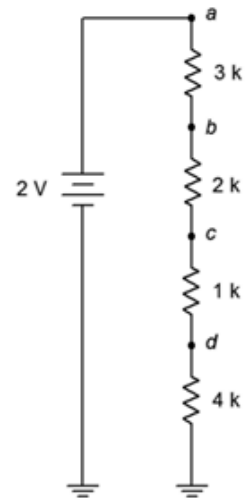

Figure 3.10.20

37. For the circuit of Figure 3.10.20 , determine V_b if the 4 kΩ resistor is accidentally shorted. How does this compare to the original circuit?

Answer 37

- $V_b = 1V$. The 2V is now split across the three remaining resistors

38. For the circuit of Figure 3.10.20 , determine V_b if the 4 kΩ resistor is accidentally opened. How does this compare to the original circuit?

39. Given the circuit shown in Figure 3.10.21 , find the voltage drop across the resistor.

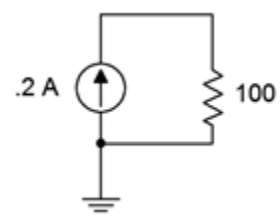

Figure 3.10.21

Answer 39

- 20V

40. Given the circuit shown in Figure 3.10.22 , find the voltage drops across the resistor.

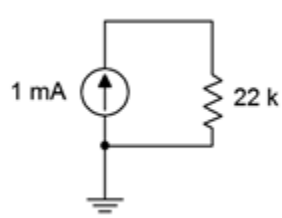

Figure 3.10.22

41. Find the voltage drops across the resistors in the circuit of Figure 3.10.23 .

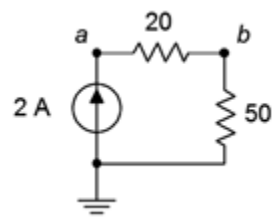

Figure 3.10.23

Answer 41

- $V_{20} = 40V$
- $V_{20} = 100V$

42. Find the voltage drops across the resistors in the circuit of Figure 3.10.24 .

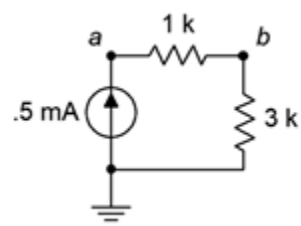

Figure 3.10.24

43. Find the voltage drops across the resistors in the circuit of Figure 3.10.25 .

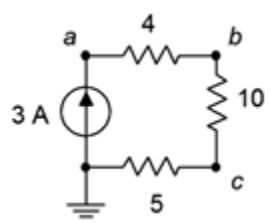

Figure 3.10.25

Answer 43

- $V_4 = 12V$
- $V_{10} = 30V$
- $V_5 = 15V$

44. Find the voltage drops across the resistors in the circuit of Figure 3.10.26 .

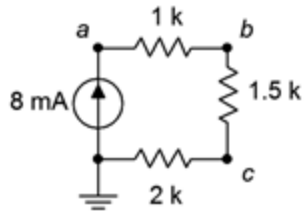

Figure 3.10.26

45. The circuit of Figure 3.10.27 uses a linear taper potentiometer. Determine V_b when the wiper arm is at position a, position b, and at the halfway point.

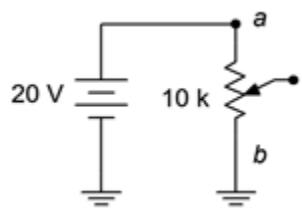

Figure 3.10.27

Answer 45

- $V_b = 0V$. This is true no matter where the wiper arm of the potentiometer is

46. What is the maximum current flowing through the potentiometer of Figure 3.10.27 ? At what position(s) does this occur?

Design

47. Redesign the circuit of Figure 3.10.1 using a new resistor such that the current from the 12 volt battery is 0.1 A.

Answer 47

- Change the 100 Ω resistor to 120 Ω

48. Redesign the circuit of Figure 3.10.2 using a new resistor such that the current from the 9 volt battery is 2 mA.

49. For the circuit of Figure 3.10.6 , find the value of a series voltage source that would generate 1 mA of current if it was connected across the terminals.

Answer 49

- 5.5V

50. For the circuit of Figure 3.10.8 , find the value of a series voltage source that would generate 1 mA of current if it was connected across the terminals.

51. Determine values for the resistors in Figure 3.10.28 such that R_1 is four times the size of R_2 and R_2 is three times the size of R3, with the total resistance equaling 8 kΩ.

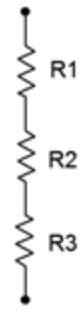

Figure 3.10.28

Answer 51

- $R_1 = 6k\Omega$
- $R_2 = 1.5k\Omega$
- $R_3 = 500\Omega$

52. For the circuit shown in Figure 3.10.29 , determine values for R_1 and R_2 such that V_{ab} is 6 volts if E is a 9 volt battery and the total current draw is 20 mA.

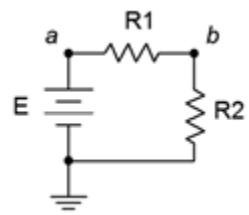

Figure 3.10.29

53. Consider the circuit shown in Figure 3.10.30 . If all resistors have the same value, determine that value if E, a 24 volt source, generates a total power of 10 watts.

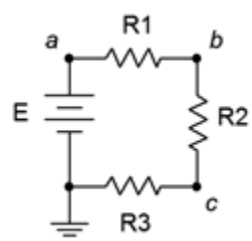

Figure 3.10.30

Answer 53

- 19.2Ω

54. For the circuit shown in Figure 3.10.31 , determine values for R_1 and R_2 such that V_{ab} is 6 volts if I is a 2 mA source and the total voltage drop is 24 volts.

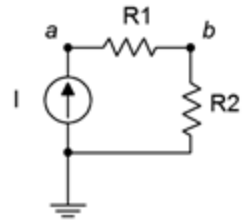

Figure 3.10.31

55. Consider the circuit of Figure 3.10.20 . Is it possible to add a fifth resistor such that the circulating current is 0.1 mA? If so, what is that resistor value?

Answer 55

- Yes, 10 $k\Omega$

56. Consider the circuit of Figure 3.10.20 . Is it possible to add a fifth resistor such that the circulating current is 2 mA? If so, what is that resistor value?

Challenge

57. Assume that two AA cells, E_1 and E_2, rated at 900 mAh each are used to drive a 2 watt lamp as shown in Figure 3.10.32 . Determine the expected life of the batteries.

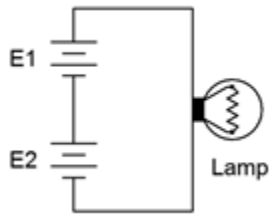

Figure 3.10.32

58. Given the circuit of Figure 3.10.33 , determine the required values of E, R_1, R_2 and R_3 if there is one volt across R_3, the total current draw is 10 mA, the voltage across R_1 is twice the size of voltage across R_2 and the power dissipation in R_2 is 100 mW.

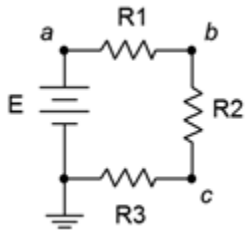

Figure 3.10.33

59. Given the circuit of Figure 3.10.33 , determine the required source voltage if R_1 is 1 kΩ, R_2 is 1 kΩ, the power dissipation in R_1 is 4 mW and the power dissipation in R_3 is 2 mW.

60. Given the circuit of Figure 3.10.34 , determine V_c, V_{db} and V_{ce}.

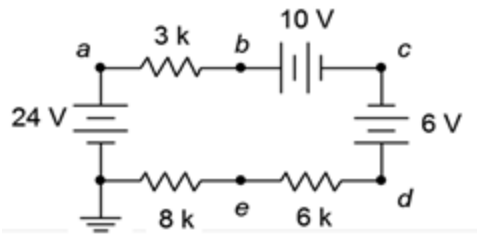

Figure 3.10.34

61. Given the circuit of Figure 3.10.34 , determine V_{ac}, V_{eb} and V_d.

62. Refer to the circuit of Figure 3.10.20 . Assuming each resistor has a 10% tolerance, determine the maximum and minimum values for V_c.

Simulation

63. Simulate the solution of design problem 43 and determine if the values produce the required results.

64. Perform a DC simulation on the circuit of Figure 3.10.13 and find all of the node voltages along with the circulating current.

65. Perform a DC simulation on the circuit of Figure 3.10.14 and find all of the node voltages along with the circulating current.

66. Perform a DC simulation on the circuit of Figure 3.10.26 and find all of the node voltages.

67. Perform a DC simulation on the circuit of Problem 34 and find all of the node voltages.

68. Perform a DC simulation on the circuit of Problem 36 and find all of the node voltages.

69. Simulate the solution of Challenge problem 58 and determine if the values produce the required results.

70. Simulate the circuit of Figure 3.10.34 (Challenge problems 60 and 61) and determine if the node voltages produced match the expected results.

71. Perform a Monte Carlo simulation on the circuit of Figure 3.10.19 . Set each resistor to 5% tolerance and run at least ten variations for V_b to determine a typical spread of values.

Source: www.xkcd.com

This page titled 3.10: Exercises is shared under a CC BY-NC-SA 4.0 license and was authored, remixed, and/or curated by James M. Fiore via source content that was edited to the style and standards of the LibreTexts platform.

4: PARALLEL RESISTIVE CIRCUITS

Learning Objectives

After completing this chapter, you should be able to:

- Identify parallel resistive circuits that include a single voltage source or one or more current sources.
- Compute equivalent resistance of parallel resistive networks.
- Determine the equivalent of multiple parallel current sources.
- Compute component and total current for parallel resistive networks.
- Compute system voltage and component powers for parallel resistive networks.
- Utilize Ohm's law, Kirchhoff's current law (KCL) and the current divider rule (CDR) to aid in the analysis of parallel resistive circuits.
- Describe the function of fuses and circuit breakers.

4.1: Introduction

4.2: The Parallel Connection

4.3: Combining Parallel Components

4.4: Kirchhoff's Current Law

4.5: Parallel Analysis

4.6: Current Limiting - Fuses and Circuit Breakers

4.7: Summary

4.8: Exercises

This page titled 4: Parallel Resistive Circuits is shared under a CC BY-NC-SA 4.0 license and was authored, remixed, and/or curated by James M. Fiore via source content that was edited to the style and standards of the LibreTexts platform.

4.1: Introduction

In the preceding chapter we examined series circuits, starting with series configurations of resistors and voltage sources. In this chapter we shall examine the “mirror twin” of series circuits, namely parallel circuits. Again, we shall begin by defining the parallel configuration, and explore how to combine sources and resistors in parallel. From there we shall introduce new laws and rules unique to parallel configurations. For everything said about series circuits, there are corresponding statements regarding parallel circuits. Just as there were specific laws and techniques useful in the series case, such as Kirchhoff's voltage law and the voltage divider rule, there are corresponding laws and techniques useful in the series case (e.g., Kirchhoff's current law and the current divider rule).

A parallel circuit may contain any number of resistors and current sources, or in place of the current sources, a single voltage source. We shall examine how to determine the current flow through each component, the voltage across each component and the power either dissipated or generated by each component. As usual, other practical issues will also be examined along with appropriate computer simulations.

Parallel circuits are in many ways the complement of series circuits. The hallmark of a series connection is that all components in that connection see the same current. Similarly, the most notable characteristic of a parallel connection is that all components see the same voltage. This implies that parallel connections have only two nodes, or two points of connection upon which everything is connected. Just as a series connection can be envisioned as a sort of chain with every element a link in that chain, a parallel connection can be envisioned as a sort of ladder with every element a rung on that ladder.

This page titled 4.1: Introduction is shared under a CC BY-NC-SA 4.0 license and was authored, remixed, and/or curated by James M. Fiore via source content that was edited to the style and standards of the LibreTexts platform.

4.2: The Parallel Connection

Consider the generic layout of Figure 4.2.1 , each component represented by a box.

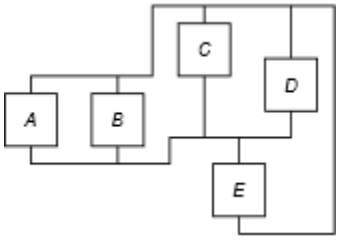

Figure 4.2.1 : A parallel configuration.

Although it may be drawn oddly, there are only two common connection nodes in this configuration: one along the top and the other along the bottom (if you're having difficulty seeing the bottom node, simply slide box E to the right and then rotate it counterclockwise 180 degrees so that its bottom winds up on top). Each of these blocks is like a rung on a ladder. If we were to take a voltmeter and place it across any of these blocks, the meter would read the same voltage across each because the probes are always contacting the same two nodes (remember, ideally the connecting wires have negligible resistance). Thus, we come to the first observation of parallel circuits:

$$\text{In a parallel connection the voltage is the same across each component.} \tag{4.2.1}$$

A more complex configuration is shown in Figure 4.2.2 . In this layout some elements are in series and some are in parallel. Only elements D and E are strictly in parallel here as they are the only two that connect to the same two nodes, and thus must see the same voltage. Items C and F might at first appear to be in parallel with them but upon closer inspection it should be noted that C and F are in series with each other. That is, C and F will split the voltage that D or E sees, in accordance with the voltage divider rule. In other words, it is not true that the voltage across C or across F must be the same as the voltage across D or E. The same can be said for items A and B.[1]

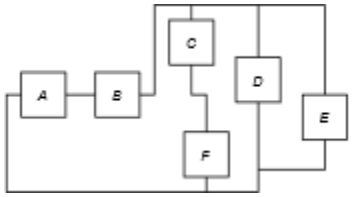

Figure 4.2.2 : A more complex configuration.

References

[1]What can be said is that the series combination of C and F together is in parallel with D which is, in turn, in parallel with E. This is the basic idea behind series-parallel networks, the theme of the next chapter.

This page titled 4.2: The Parallel Connection is shared under a CC BY-NC-SA 4.0 license and was authored, remixed, and/or curated by James M. Fiore via source content that was edited to the style and standards of the LibreTexts platform.

4.3: Combining Parallel Components

Our first step is to determine how to combine parallel components in order to create a single equivalent component. Unlike series connections, this can be a little more time consuming.

Sources in Parallel

First, voltage sources are not placed in parallel as a general rule, see Figure 4.3.1 . The reason is because a parallel connection requires the same voltage across each component. This would be impossible to achieve with each source trying to maintain a different voltage across the same two nodes. This may result in damage to the sources (e.g., exploding batteries). The main exception to this rule is if the sources have the same potential and the goal is to extend operational life (e.g., multiple D cell batteries in parallel).

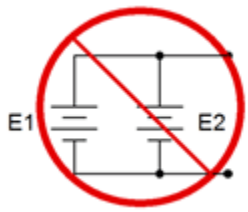

Figure 4.3.1 : Do not place voltage sources in parallel.

When it comes to current sources, they may simply be added together, however, like series voltage sources, polarity is important. Referring to the three parallel current sources in Figure 4.3.2 , the middle and right sources are pumping current into the top node while the left source is feeding the bottom node. You can also think of the left source as draining the top node. Thus, these three sources together behave like a single source of five amps feeding the top node (eight amps in, three amps out).

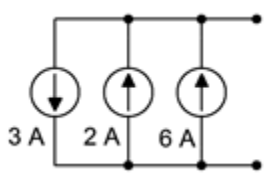

Figure 4.3.2 : Current sources in parallel.

Resistors in Parallel

When placed in parallel, resistor values do not add they way they do in series connections. The reason for this is obvious if we look at the basic resistance equation from Chapter 2, Equation 2.11:

$$R = \frac{\rho l}{A}$$

If we consider two identical resistors placed in parallel, side by side as in Figure 4.3.3 , the effective area would double while keeping the resistivity and length unchanged. The combined result would be a halving of the resistance of just one of them. Thus we see that placing resistors in parallel results in a decrease in net resistance, the opposite of the series case.

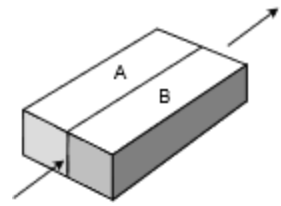

Figure 4.3.3 : Resistors in parallel.

This situation is simplified if we consider conductance instead of resistance. Recalling that conductance, G, is the reciprocal of resistance, we can rewrite the resistance equation:

$$G = \frac{A}{\rho l}$$

Now we can see that the increase in area creates a proportional increase in conductivity. If we generalize this for N resistors we find that the equivalent conductance of a group of parallel resistors is their sum:

$$G_{Total} = G_1 + G_2 + G_3 + \cdots + G_N \tag{4.3.1}$$

As we deal normally with component resistance values instead of conductance values, Equation 4.3.1 may be rewritten in terms of equivalent resistance:

$$\begin{gathered} \frac{1}{R_{Parallel}} = \frac{1}{R_1} + \frac{1}{R_2} + \frac{1}{R_3} + \cdots + \frac{1}{R_N} \\ R_{Parallel} = \frac{1}{\frac{1}{R_1} + \frac{1}{R_2} + \frac{1}{R_3} + \cdots + \frac{1}{R_N}} \end{gathered} \tag{4.3.2}$$

Among other things, Equation 4.3.2 tells us that the equivalent resistance of a group of parallel resistances will always be smaller than the smallest resistance in that group. It also indicates that if we have N identical resistors of value R, the equivalent will be R/N (e.g., 3 parallel 3.6 kΩ resistors are equivalent to a single 1.2 kΩ resistor). As a convenience, it is common to use two parallel lines, $||$, as a shortcut way of saying “in parallel with”, as in $R_1||R_2$. Also, $||$ has higher operational precedence than +.

Product-Sum Rule

A handy shortcut for two parallel resistors may be created from Equation 4.3.2. We start by writing the version for just two parallel resistors,

$$R_{Parallel} = \frac{1}{\frac{1}{R_1} + \frac{1}{R_2}}$$

Multiply the fraction through by R_1 R_2 and simplify:

$$R_{Parallel} = \frac{R_1 R_2}{R_1 + R_2} \tag{4.3.3}$$

For obvious reasons, Equation 4.3.3 is referred to as the product-sum rule. It is only applicable to two resistors, however, it can be used repeatedly on pairs of resistors within larger groups instead of using Equation 4.3.2. For example, a group of four resistors can be reduced to two pairs, and then those two equivalents can be reduced as a third pair. This can be a handy technique for obtaining quick estimates.

We can take the product-sum rule a step further by writing R_2 as a multiple of R_1:

$$R_2 = NR_1$$

Substituting this into Equation 4.3.3 yields:

$$R_{Parallel} = \frac{R_1 N R_1}{R_1 + N R_1}$$

$$R_{Parallel} = \frac{NR_1^2}{(N+1)R_1}$$

$$R_{Parallel} = \frac{N}{N+1}R_1 \tag{4.3.4}$$

Equation 4.3.4 is useful for quick estimates of parallel resistor pairs. For example, if we have a 24 kΩ resistor in parallel with an 8 kΩ resistor, that's a ratio (N) of 3:1. Thus the equivalent will be $N/(N+1)$, or 3/4ths, of the smaller resistor, yielding 6 kΩ. Similarly, a 180 Ω in parallel with a 90 Ω would yield 2/3rds of 90 Ω, or 60 Ω.

Example 4.3.1

A group of resistors is placed in parallel as shown in Figure 4.3.4 . Determine the equivalent parallel value.

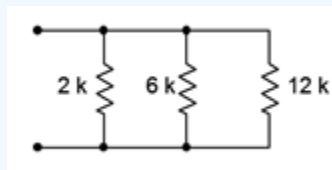

Figure 4.3.4 : Resistor arrangement for Example 4.3.1 .

There are several solution paths. We'll try them all and compare. First, let's try the conductance form:

$$R_{Parallel} = \frac{1}{\frac{1}{R_1} + \frac{1}{R_2} + \frac{1}{R_3} + \cdots + \frac{1}{R_N}}$$

$$R_{Parallel} = \frac{1}{\frac{1}{2k\Omega} + \frac{1}{6k\Omega} + \frac{1}{12k\Omega}}$$

$$R_{Parallel} \approx 1.333k\Omega$$

We could also use the product-sum rule twice. We'll use the middle and right-most resistor first (although any pairing would do, but this pairing is convenient):

$$R_{23} = \frac{R_2R_3}{R_2+R_3}$$

$$R_{23} = \frac{6k\Omega 12k\Omega}{6k\Omega + 12k\Omega}$$

$$R_{23} = 4k\Omega$$

$$R_{Parallel} = \frac{R_1R_{23}}{R_1+R_{23}}$$

$$R_{Parallel} = \frac{2k\Omega 4k\Omega}{2k\Omega + 4k\Omega}$$

$$R_{Parallel} \approx 1.333k\Omega$$

Finally, we could use the ratio technique. First, consider the 6 kΩ and 12 kΩ resistor pair. That's a 2:1 ratio, so the result will be 2/3rds of the smaller resistor, and 2/3rds of 6 kΩ is 4 kΩ. The ratio between this and the 2 kΩ resistor is also 2:1, and 2/3rds of 2 kΩ is approximately 1.333 kΩ.

The ratio technique happened to work out well here because of the convenient resistor values with perfect integer ratios. That will not always be the case.

This page titled 4.3: Combining Parallel Components is shared under a CC BY-NC-SA 4.0 license and was authored, remixed, and/or curated by James M. Fiore via source content that was edited to the style and standards of the LibreTexts platform.

4.4: Kirchhoff's Current Law

Just as Kirchhoff's voltage law is a key element in understanding series circuits, Kirchhoff's current law (KCL) is the operative rule for parallel circuits. It states that the sum of all currents entering and exiting a node must sum to zero. Alternately, it can be stated as the sum of currents entering a node must equal the sum of currents exiting that node. As a pseudo formula:

$$\sum I \rightarrow = \sum I \leftarrow \tag{4.4.1}$$

Recalling that a node is a connection area wherein the voltage is the same (ignoring the resistance of connecting wires), we see that there are two nodes in a parallel configuration. For each of these nodes, whatever currents flow in must be balanced by the same total current flowing out. For example, referring to the circuit shown in Figure 4.4.1 , there is a current source feeding the top node. At the three-way connection with R_1 and R_2, KCL along with Ohm's law dictate that the incoming current from the source must split with one portion exiting by flowing down through R_1 and the remainder exiting by flowing down through R_2. At the bottom node (ground) these two resistor currents must combine and equal the current that is being drawn back into the current source, which must be the same as the current originally produced by the source. This is perfectly sensible because it would be impossible for the current source to establish two different currents; one at its input and the other at its output. To assert otherwise would be a little like saying you're two different heights depending on whether you measure from your toes up to your head versus from your head down to your toes. Thus, a simplistic way of stating KCL is “What goes in must come out”.[1]

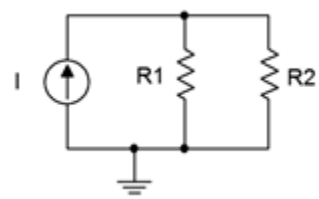

Figure 4.4.1 : A simple parallel circuit.

The Current Divider Rule (CDR)

Just as series circuits follow the voltage divider rule (voltage dividing in proportion to resistance), parallel circuits follow the current divider rule which states that current divides in reverse proportion to resistance (i.e., in direct proportion to conductance). This can be reduced to a simple formula when only two resistors are involved. Consider two parallel resistors, R_1 and R_2, fed by a current, I_{Total}, as in Figure 4.4.1 . First, we note that the voltage across the pair must equal the entering current times the effective resistance of the pair.

$$V = I_{Total}\frac{R_1 R_2}{R_1 + R_2}$$

The current through each of the resistors must be this voltage divided by the corresponding resistance. For the current through R_1:

$$I_{R1} = \frac{V}{R_1}$$

$$I_{R1} = I_{Total}\frac{R_1 R_2}{R_1(R_1 + R_2)}$$

$$I_{R1} = I_{Total}\frac{R_2}{R_1 + R_2}$$

Similarly, for the current through R_2:

$$I_{R2} = \frac{V}{R_2}$$

$$I_{R2} = I_{Total}\frac{R_1 R_2}{R_2(R_1+R_2)}$$

$$I_{R2} = I_{Total}\frac{R_1}{R_1+R_2}$$

Thus, the current through one of the resistors will equal the total current times the ratio of the opposite resistor over the sum of the two resistors. In general:

$$I_X = I_{Total}\frac{R_Y}{R_X+R_Y} \tag{4.4.2}$$

This rule is convenient in that you don't have to compute the parallel equivalent resistance, but remember, it is valid only when there are just two resistors involved. A more general version that can be used for any number of resistors is $I_i = I_{Total} \cdot R_P/R_i$, where R_P is the total equivalent parallel resistance and R_i is the resistor of interest. This is, in essence, merely a rewriting of the fact that all components must see the same voltage: $I_i \cdot R_i = I_{Total} \cdot R_P$. This is not as much of a shortcut as the two resistor version because the parallel resistance still must be calculated.

Example 4.4.1

A simple parallel network is shown in Figure 4.4.2 . Determine the current through each resistor.

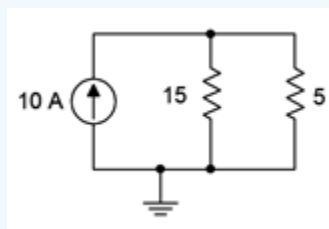

Figure 4.4.2 : Circuit for Example 4.4.1 .

The current divider rule can be used to find the currents through the two resistors. At the top node the total entering current is 10 amps.

$$I_{R1} = I_{Total}\frac{R_2}{R_1+R_2}$$

$$I_{15} = 10A\frac{5\Omega}{15\Omega+5\Omega}$$

$$I_{15} = 2.5A$$

$$I_{R2} = I_{Total}\frac{R_1}{R_1+R_2}$$

$$I_5 = 10A\frac{15\Omega}{15\Omega+5\Omega}$$

$$I_5 = 7.5A$$

At this point it is worth taking a moment to verify the voltage polarities and current directions. Given the direction of the source, the currents through the two resistors must be flowing from top to bottom. Consequently, the voltage polarities must be + to – from top to bottom. This is illustrated in Figure 4.4.3 . At the top node, entering current is in red with exiting current in blue. Note that KCL is satisfied as 10 amps enters while a total of 10 amps (2.5 amps plus 7.5 amps) exits.

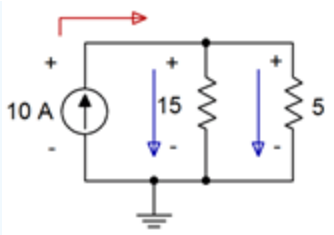

Figure 4.4.3 : Polarities and directions for Example 4.4.1 .

References

[1]For details on this corollary to Fudd's First Law of Opposition, see Firesign Theatre, I Think We're All Bozos On This Bus. Remember, the future can't wait.

This page titled 4.4: Kirchhoff's Current Law is shared under a CC BY-NC-SA 4.0 license and was authored, remixed, and/or curated by James M. Fiore via source content that was edited to the style and standards of the LibreTexts platform.

4.5: Parallel Analysis

Keeping in mind that the voltage across each element in a parallel configuration is constant, Ohm's law dictates that currents divide among parallel resistors in proportion to their conductance (i.e., in inverse proportion to their resistance). As a consequence, Ohm's law, Kirchhoff's current law, the current divider rule and parallel component combinations are the tools we will use to solve general parallel circuit problems. There are multiple techniques for analyzing these circuits:

- If the circuit uses a voltage source and its value along with the resistor values are given, the resistor currents can be found by dividing the source voltage by each resistance. Once these currents are found, KCL can be used to determine the source current. At that point, power law can be used to find the power dissipation in each resistor or the power developed by the source, as needed.
- If the circuit uses current sources, then the total circulating current can be found by combining their values (taking into account the current directions, of course). The individual resistor branch currents then can be found using the current divider rule (repeatedly, if needed). Alternately, the effective parallel resistance may be found first. Multiplying this by the total source current via Ohm's law will determine the system voltage, and from there the individual resistor branch currents may be found using Ohm's law.
- If the problem concerns determining resistance values, the basic idea will be to use these rules in reverse. For example, if a resistor value is needed to set a specific voltage, the equivalent parallel resistance can be determined from this voltage and the given current source. The conductance values of the other parallel resistors can then be subtracted from the total conductance (i.e., the reciprocal of the equivalent parallel resistance), yielding the remaining required conductance value, the reciprocal being the required resistance. Similarly, if the currents through two parallel resistors are known, as long as one of the resistance values is known, the other resistance can be determined using either the current divider rule in reverse (i.e., the currents divide in inverse proportion to the resistances) or via Ohm's law.

Example 4.5.1

A simple parallel network is shown in Figure 4.5.1 . Determine the current through each resistor as well as the total current exiting the voltage source.

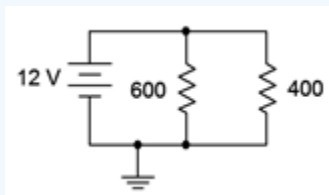

Figure 4.5.1 : Circuit for Example 4.5.1 .

The most direct solution is to use Ohm's law to determine each of the resistor branch currents. KCL can then be used to determine the current flowing from the source. Recalling the voltage is the same across parallel branches:

$$I_{600} = \frac{E}{R_1}$$

$$I_{600} = \frac{12V}{600\Omega}$$

$$I_{600} = 20mA$$

$$I_{400} = \frac{E}{R_2}$$

$$I_{400} = \frac{12V}{400\Omega}$$

$$I_{400} = 30mA$$

KCL dictates that the entering current must equal the sum of the exiting currents, or 50 mA.

An alternate technique would be to determine the parallel resistance and divide this into the source voltage to determine the exiting source current.

$$R_{Parallel} = \frac{R_1 R_2}{R_1 + R_2}$$

$$R_{Parallel} = \frac{400\Omega 600\Omega}{400\Omega + 600\Omega}$$

$$R_{Parallel} = 240\Omega$$

$$I_{Total} = \frac{E}{R_{Parallel}}$$

$$I_{Total} = \frac{12V}{240\Omega}$$

$$I_{Total} = 50mA$$

Now CDR can be used to find the currents through the two resistors.

$$I_{R1} = I_{Total}\frac{R_2}{R_1 + R_2}$$

$$I_{400} = 50mA\frac{600\Omega}{400\Omega + 600\Omega}$$

$$I_{400} = 30mA$$

$$I_{R2} = I_{Total}\frac{R_1}{R_1 + R_2}$$

$$I_{600} = 50mA\frac{400\Omega}{400\Omega + 600\Omega}$$

$$I_{600} = 20mA$$

The voltage polarities and current directions are illustrated in Figure 4.5.2 . The voltage polarity is + to – from top to bottom, as set by the voltage source. With these polarities, the currents through the two resistors must be flowing from top to bottom and the current from the source is flowing right, from the positive terminal. At the top node, entering current is in red with exiting current in blue.

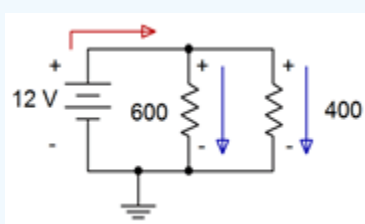

Figure 4.5.2 : Polarities and directions for Example 4.5.1 .

Computer Simulation

The circuit of Example 4.5.1 is entered into a simulator as shown in Figure 4.5.3 . In this example, virtual instruments are used. Three ammeters are inserted in line to measure the current exiting the voltage source as well as the currents flowing through the two resistors. The polarities of the ammeters are set to match those illustrated in Figure 4.5.2 . As a consequence, we expect to

see all positive currents.

The result is pretty much as expected. The current through the 600 Ω resistor is precisely 20 mA and the source current is precisely the sum of the two resistor currents. The only wrinkle is that the current through the 400 Ω resistor is very slightly less than expected, 29.999 mA versus 30 mA calculated. This is due to meter loading effects. In Chapter 3 we saw that ammeters present a very low internal resistance, but this cannot always be ignored, especially when measuring in series with resistors having very small values. This slight increase in resistance forces a slight decrease in current due to Ohm's law.

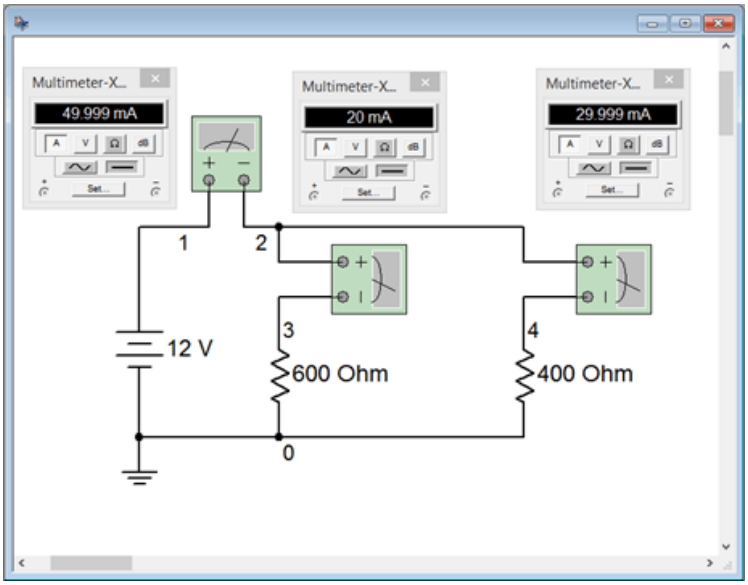

Figure 4.5.3 : The circuit of Example 4.5.1 in a simulator.

It turns out that a similar situation exists for voltmeters. Ideally, voltmeters present a very high internal resistance which, when placed across a resistor, has minimal impact. This effect cannot always be ignored, especially when measuring across resistors having large values, as the current divider rule will come into play. Fortunately, the internal resistance of many virtual instruments is adjustable and can be set to extreme values to minimize any impact on measurements. In the world of physical instruments this is not possible so the internal resistance of any real world meter is something that must always be kept in mind.

Example 4.5.2

A parallel network is shown in Figure 4.5.4 . Determine the current through each resistor.

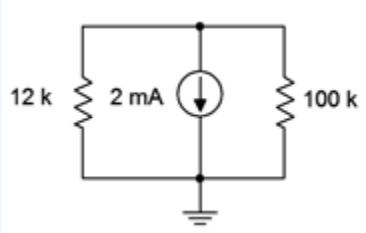

Figure 4.5.4 : Circuit for Example 4.5.2 .

The current divider rule can be used to find the currents through the two resistors. At the bottom node (ground) the total entering current is 2 mA.

$$I_{R1} = I_{Total}\frac{R_2}{R_1 + R_2}$$

$$I_{12k} = 2mA\frac{100k\Omega}{12k\Omega + 100k\Omega}$$

$$I_{12k} \approx 1.7857mA$$

The current through the 100 kΩ can be found via KCL as follows:

$$I_{R2} = I_{Total} - I_{R1}$$

$$I_{100k} = 2mA - 1.7857mA$$

$$I_{100k} \approx 0.2143mA$$

The polarities and directions are shown in Figure 4.5.5 . Note that the currents are flowing up through the resistors producing voltage drops of + to – from ground up to the top. This means that the voltage of the top node is negative with respect to ground.

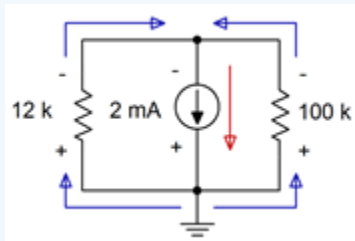

Figure 4.5.5 : Polarities and directions for Example 4.5.2 .

Computer Simulation

In order to get a better handle on the idea of meter loading, the circuit shown in Example 4.5.2 is entered into a simulator. This is shown in Figure 4.5.6 with the simulation using virtual instruments. Using Ohm's law, the voltage drop across the system should be 100 kΩ times its current, or approximately 21.4286 volts if we carry the digits out a little further.

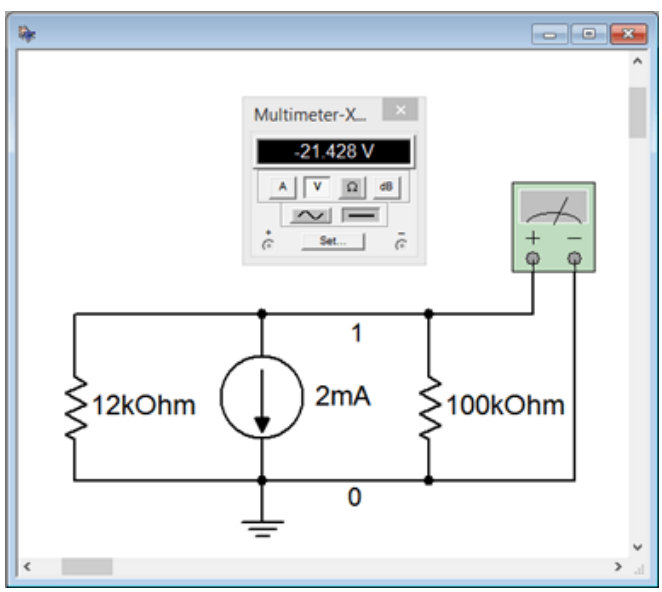

Figure 4.5.6 : The circuit of Example 4.5.2 in a simulator.

The virtual voltmeter has been set for an internal resistance of 1 GΩ. The results are nearly the same as those calculated previously. To test the impact of the voltmeter's internal resistance the simulation is run a second time with the internal resistance

set to 1 MΩ, a value seen commonly in general purpose digital multimeters. The result is shown in Figure 4.5.7 . The voltage magnitude has dropped more than 200 mV, entirely due to meter loading.

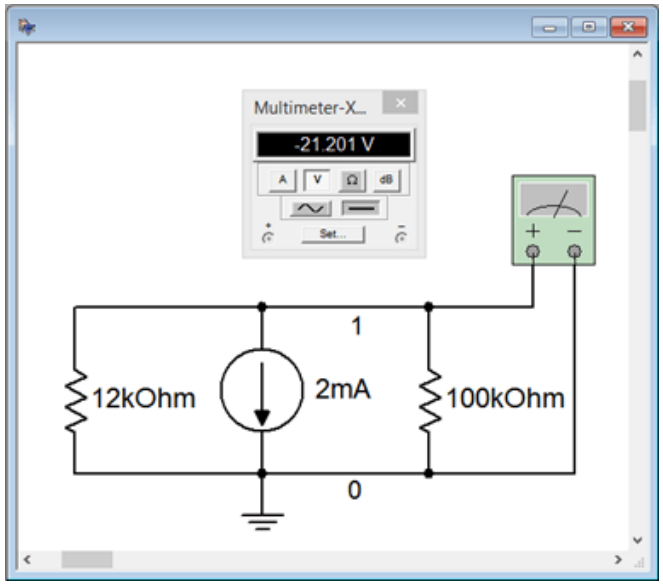

Figure 4.5.7 : Simulation repeated using a voltmeter internal resistance of 1 MΩ.

Depending on component values, the results could be much worse or hardly noticeable at all. As a general rule, make sure the voltmeter's internal resistance is at least 10 times (and preferably, 100 times) larger than any resistance it is placed across in order to avoid loading errors caused by unwanted current division. In the case of an ammeter, its internal resistance should be at least 10 times (and preferably, 100 times) smaller than any resistance with which it is placed in series.

Example 4.5.3

A parallel network is shown in Figure 4.5.8 . Determine the current through the 200 Ω resistor.

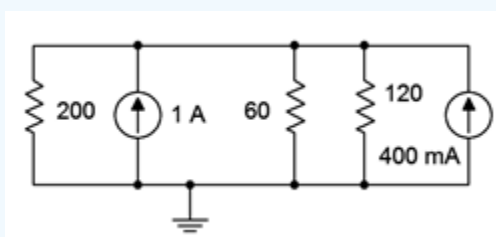

Figure 4.5.8 : Circuit for Example 4.5.3 .

The first step is to simplify the circuit. The two current sources aid each other as they both feed current into the top node. Thus they are equivalent to a single 1.4 amp current source with the same direction. Further, the 60 Ω and 120 Ω resistors are in parallel and can be treated as a single unit. Note this is a 2:1 ratio, and thus the result will be 2/3rds of 60 Ω, or 40 Ω. The basic product-sum rule or conductance formula could also be used.

We have simplified the circuit down to a single 1.4 amp source feeding a 200 Ω resistor in parallel with a 40 Ω resistor. The current divider rule can be used to find the current through the 200 Ω resistor as follows:

$$I_{R1} = I_{Total}\frac{R_2}{R_1 + R_2}$$

$$I_{200} = 1.4A\frac{40\Omega}{200\Omega + 40\Omega}$$

$$I_{200} \approx 233.33mA$$

As a crosscheck, Ohm's law indicates the system voltage must be 200 Ω times 233.33 mA, or approximately 46.667 volts. Via Ohm's law, the current through the 60 Ω must be 46.667 volts divided by 60 Ω, or approximately 777.78 mA. Similarly, the current through the 120 Ω can be determined to be approximately 388.89 mA. Via KCL, these three currents should add up to the total supplied current of 1.4 amps, which they do.

An alternate solution path would be to find the equivalent of the three parallel resistors, or $200||60||120$, which is 33.333 Ω. This is fed by the combined sources yielding 1.4 amps. Ohm's law is then used to find the system voltage of approximately 46.667 volts (1.4 amps times 33.333 Ω). From there Ohm's law is used again to find the current flowing through the 200 Ω (46.667 volts divided by 200 Ω, or approximately 233.33 mA).

Let's continue with the prior example, this time with a design twist.

Example 4.5.4

Using the circuit of Figure 4.5.8 , determine the value of an additional fourth parallel resistor such that the system voltage will drop to 42 volts.

The total source current in this circuit is fixed at 1.4 amps. If the resistance it feeds is reduced, then by Ohm's law, the system voltage must also be reduced. One way to solve this problem is to first determine the required parallel equivalent resistance. Then the conductances of the three known resistors can be subtracted out, leaving the conductance of the new resistor, from which we determine its resistance.

$$R_{Parallel} = \frac{V}{I}$$

$$R_{Parallel} = \frac{42V}{1.4A}$$

$$R_{Parallel} = 30\Omega$$

$$G_4 = G_{Parallel} - G_1 - G_2 - G_3$$

$$G_4 = \frac{1}{30\Omega} - \frac{1}{200\Omega} - \frac{1}{60\Omega} - \frac{1}{120\Omega}$$

$$G_4 \approx 3.333mS$$

And finally, $R_4 = 1/G_4$, thus $R_4 = 300\Omega$.

The smaller the value of this fourth resistor, the more current it will siphon off from the other three resistors, thus reducing the system voltage further.

Time for an example involving power.

Example 4.5.5

A parallel network is shown in Figure 4.5.9 . Determine the total power dissipated by the four resistors.

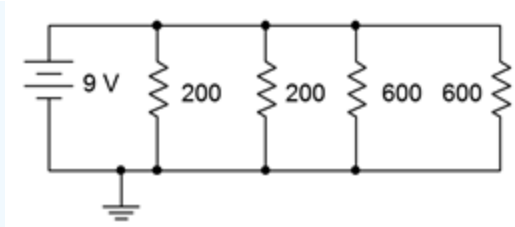

Figure 4.5.9 : Circuit for Example 4.5.5 .

While the powers for each resistor can be calculated individually and then added, it is worthwhile to note that the total power dissipated must be equal to the power generated. The power generated by the battery is dictated by power law, in other words, the battery voltage times its output current. To find this current, we can determine the effective resistance and then apply Ohm's law.

The total resistance can be found directly by using the conductance formula, however, the values can be divided into convenient pairs first. The pair of 200 Ω resistors is equivalent to a single 100 Ω. Similarly, the two 600 Ω resistors are equivalent to a single 300 Ω. Product-sum rule may be used next or $100||300$ can be determined using the ratio rule. This is a 3:1 ratio, so the result will 3/4ths of the smaller resistor, or 75 Ω.

$$I_{Total} = \frac{E}{R_{Total}}$$

$$I_{Total} = \frac{9V}{75\Omega}$$

$$I_{Total} = 120mA$$

$$P = E \times I$$

$$P = 9V \times 120mA$$

$$P = 1.08W$$

Slightly quicker, we could also use the following approach:

$$P = \frac{E^2}{R}$$

$$P = \frac{(9V)^2}{75\Omega}$$

$$P = 1.08W$$

This page titled 4.5: Parallel Analysis is shared under a CC BY-NC-SA 4.0 license and was authored, remixed, and/or curated by James M. Fiore via source content that was edited to the style and standards of the LibreTexts platform.

4.6: Current Limiting - Fuses and Circuit Breakers

Most electrical and electronic devices are designed to run off of a constant voltage source. Examples include battery powered devices and the numerous items that connect to standard residential and commercial electrical systems (e.g., the 120 VAC system in North America). As such, parallel connections are ideal when a variable number of devices are to be powered because, unlike a series connection, each device will see the same voltage rather than having that voltage split among them. There is another advantage to a parallel connection. Consider the two lighting schemes presented in Figure 4.6.1 ; one utilizing a series configuration and the other a parallel configuration.

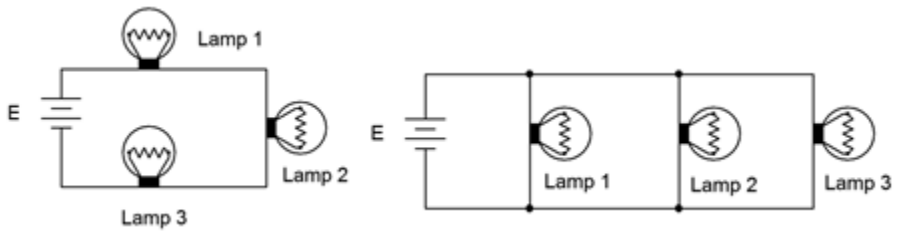

Figure 4.6.1 : Lamp connections: Series (left) and parallel (right).

Typically, when a lamp fails, it fails creating an open. If any of the lamps in the series connection fails, current in the loop is interrupted and all of the lamps go out. In contrast, if one of the lamps in the parallel connection fails, the remaining lights will stay on. Further, in the series connection, there is no immediate way to determine which lamp has failed as none of them will be lit. Each lamp has to be tested in turn to determine the faulty unit. In the parallel system, it is obvious which lamp has failed because that's the one that's out.

In a home, school or commercial setting, any number of devices may be plugged into wall sockets with the expectation that each unit will receive the same voltage and operate correctly due to the parallel nature of the system. As convenient as this is, there is a practical problem. Every device that is added to the system presents another path for current flow. Due to KCL, this means that the total current drawn from the source must increase. This creates a potential problem because if too much current is drawn, there can be an appreciable voltage drop across the wires feeding the outlets as they can no longer be assumed to be zero ohms. This lowered voltage may present a problem for the attached devices, but more importantly, the large current results in unexpected heating of the wires because of the power dissipation in them (I^2R) and creates a possible fire hazard. Consequently, we must include some method to limit the current to a safe maximum value.

While some electronic systems use active current limiting schemes[1], the more common approach is a fuse or circuit breaker. These devices are placed between the voltage source and the various loads, and see their combined current. If this current becomes too great, the device interrupts the current flow by opening the circuit. Nothing will operate but nothing catches fire, either. Fuses are used typically in electronic systems, motors, automotive subsystems and the like. An array of various types of fuses is shown in Figure 4.6.2 . Whether they're the cylindrical type found in electronic instrumentation or the blade type common in automobiles, fuses are one-shot devices. They consist of a fine wire or metal link that will heat up and melt if it experiences too high of a current. Upon melting, circuit continuity is lost and current flow stops. This is called a “blown” fuse. The fuse will then need to be replaced once the problem has been fixed (i.e., whatever it was that caused excessive current to flow in the first place).

Figure 4.6.2 : Various styles of fuses.

Fuses have a nominal current rating, for example, two amps. This does not mean that as soon as two amps is reached, the fuse blows. It will take some time for the fuse to heat up. The higher the current is above the nominal rating, the faster the fuse will blow. For example, it might take this nominal two amp fuse several seconds before it blows if the current is, say, 2.5 amps, but less than a second if the current is five amps. Fuses are also available in fast-blow and slow-blow forms. Fast-blow fuses will activate many times faster than standard fuses while slow-blow types will require much long to activate (this prevents the fuse from activating accidentally with certain kinds of loads that exhibit a high initial startup current but that falls back to a more modest level once running smoothly, such as a motor). The schematic symbols for the fuse are shown in Figure 4.6.3 . The top two are IEC standard and the bottom version is the ANSI (North American) standard.

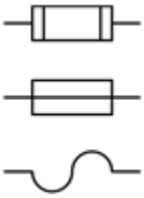

Figure 4.6.3 : Schematic symbols for fuses: IEC (top and middle), ANSI (bottom).

Fuses are generally inexpensive and effective. The obvious downside to a fuse is that they need to be replaced once they do their job. A circuit breaker solves this problem. A circuit breaker, or just breaker for short, can be thought of as a resettable fuse. Breakers do not have a melting link that interrupts current flow. Instead, a breaker operates like an intelligent switch: if the current is too large, the switch is thrown open. The operator can then fix the problem and reset the breaker (i.e., return the switch to the operating position). A selection of breakers is shown in Figure 4.6.4 . Circuit breakers are available in a variety of sizes. For residential wiring, 15 and 20 amp sizes are common for general use although higher sizes such as 30 and 50 amps are available for circuits feeding high power appliances such as electric stoves, water heaters and clothes dryers.

Figure 4.6.4 : Residential circuit breakers including cutaway view.

References

[1]For details, see Fiore, J., Semiconductor Devices as well as Operational Amplifiers and Linear Integrated Circuits, both OER titles.

This page titled 4.6: Current Limiting - Fuses and Circuit Breakers is shared under a CC BY-NC-SA 4.0 license and was authored, remixed, and/or curated by James M. Fiore via source content that was edited to the style and standards of the LibreTexts platform.

4.7: Summary

In this chapter we have introduced and examined parallel circuits using either one or more current sources or a single voltage source, along with two or more resistors. The hallmark of a parallel configuration is that all components are connected to just two nodes. This means that all elements in a parallel configuration see the same voltage. If multiple current sources are present, they may be combined into a single equivalent current source by adding their values, taking care to watch for the directions of source currents; like directions add while opposing directions subtract, in much the same manner as series-connected voltage sources. Voltage sources generally are not placed in parallel as it would be a practical impossibility to establish different voltages across the same two nodes. The major exception to this rule is if the sources use the same voltage and the goal is to extend battery life. Dissimilar parallel voltage sources will most likely cause excessive heat and an unstable voltage.

The equivalent resistance of a group of parallel resistors will always be smaller than the smallest resistor in the group because each resistor adds another path for current flow, thus enhancing conductivity and reducing resistance. In general, the effective resistance is found by summing the individual conductances to find the total conductance of the group and then taking the reciprocal of this value. Two shortcut techniques when just two resistors are involved are the product-sum rule and the ratio rule (which is particularly handy when one resistor is the integer multiple of the other).

Kirchhoff's current law (KCL) states that the sum of currents entering a node must equal the sum of currents leaving that node. Another way of stating this is that the sum of all currents entering and exiting a node must be zero (obeying polarities). The current divider rule (CDR) is useful for determining the division of current between two parallel resistors. It states that the current through one resistor must equal the current entering the pair times the ratio of the other resistance value to the summed resistance of the pair.

To determine individual branch currents in a circuit driven by a voltage source, Ohm's law may be used by dividing the source voltage by the individual resistor values. These branch currents must sum to the total current delivered by the voltage source due to KCL. If the parallel network is driven by current sources, the individual branch currents can be found by determining the effective parallel resistance and then using Ohm's law to find the system voltage. Once the voltage is known, Ohm's law is used again on each resistor to find the associated branch current. Alternately, the resistors can be simplified into successive pairings and then CDR can be applied repeatedly.

Real world ammeters and voltmeters exhibit internal resistances that can load down circuit elements and cause errors in measurement. It is best if voltmeters have an internal resistance that is lat east an order of magnitude (preferably two) larger than the resistors they are placed across in order to limit undesired current divider effects. Similarly, ammeters should have an internal resistance at least an order of magnitude (preferably two) smaller than the resistors with which they are placed in-line to limit undesired Ohm's law effects.

Fuses and circuit breakers are used to limit potentially damaging current in a system. Both devices will activate by opening the circuit if the current passing through them exceeds their rated value for a specified period of time. This results in zero current flow. Fuses are one-shot devices that must be replaced after being activated. In contrast, circuit breakers can be activated numerous times and are simply reset via a switch or button after being tripped.

Review Questions

1. Define the term parallel connection.

2. How is the equivalent resistance for a group of parallel connected resistors computed?

3. How is the equivalent value for parallel connected current sources computed?

4. Why are voltage sources generally not placed in parallel?

5. Define the product-sum rule and its use.

6. Define Kirchhoff's current law.

7. Define the current divider rule.

8. Explain the basic operation and usage of fuses and circuit breakers.

This page titled 4.7: Summary is shared under a CC BY-NC-SA 4.0 license and was authored, remixed, and/or curated by James M. Fiore via source content that was edited to the style and standards of the LibreTexts platform.

4.8: Exercises

Analysis

1. Determine the effective resistance of the network shown in Figure 4.8.1 .

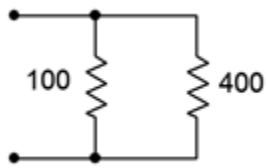

Figure 4.8.1

Answer 1

- 80 Ω

2. Determine the effective resistance of the network shown in Figure 4.8.2 .

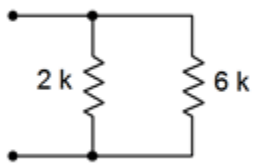

Figure 4.8.2

3. Determine the effective resistance of the network shown in Figure 4.8.3 .

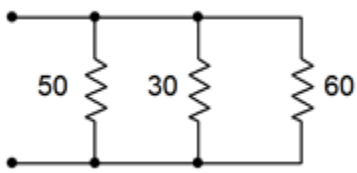

Figure 4.8.3

Answer 3

- 14.3 Ω

4. Find the effective source current of the network shown in Figure 4.8.4 .

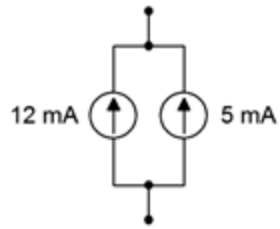

Figure 4.8.4

5. Determine the effective source current of the network shown in Figure 4.8.5 .

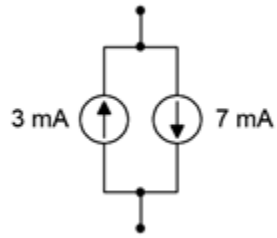

Figure 4.8.5

Answer 5

- 4mA, down

6. Find the source and resistor currents for the circuit of Figure 4.8.6 .

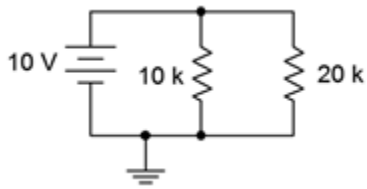

Figure 4.8.6

7. Determine the source and resistor currents for the circuit of Figure 4.8.7 .

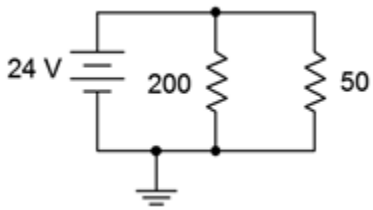

Figure 4.8.7

Answer 7

- $I_{200} = 120mA$
- $I_{50} = 480mA$
- $I_{src} = 600mA$

8. Find the source and resistor currents for the circuit of Figure 4.8.8 .

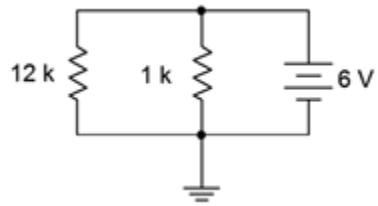

Figure 4.8.8

9. For the circuit of Figure 4.8.9 , determine the source and resistor currents.

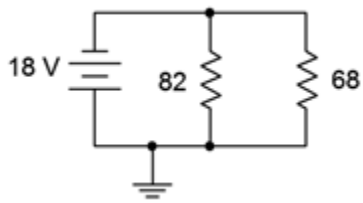

Figure 4.8.9

Answer 9

- $I_{82} = 219.5mA$
- $I_{69} = 264.7mA$
- $I_{src} = 484.2mA$

10. Determine the current through each resistor in the circuit of Figure 4.8.10 . Also determine the total power generated by the source.

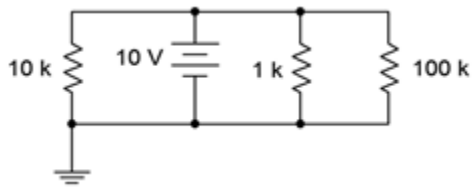

Figure 4.8.10

11. Consider the circuit shown in Figure 4.8.10 . Assume that the 100 kΩ is replaced with another resistor ten times as large. Will this have a major impact on the current exiting source? Why/why not?

Answer 11

- No. It is already the smallest current by an order of magnitude, and this makes it smaller

12. Consider the circuit shown in Figure 4.8.10 . Assume that the 1 kΩ is replaced with another resistor ten times smaller. Will this have a major impact on the current exiting source? Why/why not?

13. Find the current through each resistor in the circuit of Figure 4.8.11 .

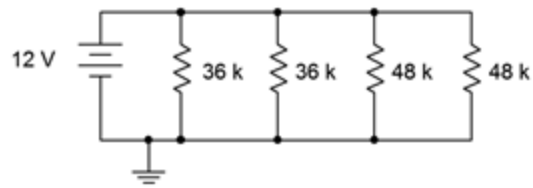

Figure 4.8.11

Answer 13

- $I_{36k} = 333.3uA$
- $I_{48k} = 250uA$

14. Determine the current through each resistor in the circuit of Figure 4.8.12 . Also determine the total current exiting by the source.

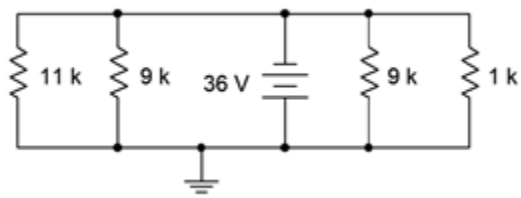

Figure 4.8.12

15. Determine the current through each resistor in the circuit of Figure 4.8.13 .

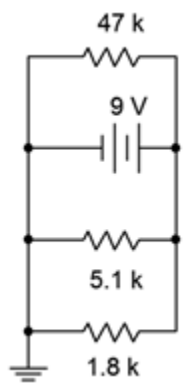

Figure 4.8.13

Answer 15

- $I_{47k} = 0.1915mA$
- $I_{5.1k} = 1.765mA$
- $I_{1.8k} = 5mA$

16. For the circuit shown in Figure 4.8.14 , determine the current through each resistor and the source voltage.

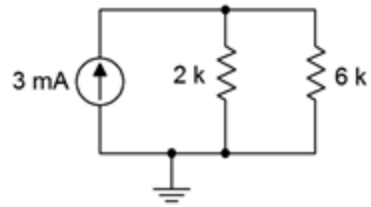

Figure 4.8.14

17. For the circuit shown in Figure 4.8.15 , determine the current through each resistor and the source voltage.

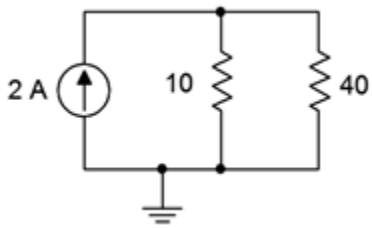

Figure 4.8.15

Answer 17

- $I_{10} = 1.6A$
- $I_{40} = 0.4mA$
- $V_{src} = 16V$

18. For the circuit shown in Figure 4.8.16 , determine the current through each resistor and the source voltage.

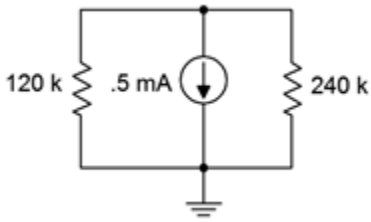

Figure 4.8.16

19. For the circuit shown in Figure 4.8.17 , determine the current through each resistor and the source voltage.

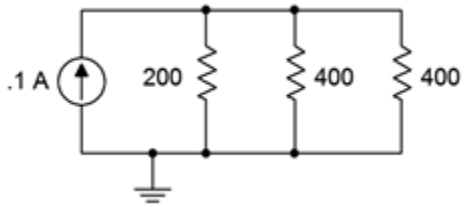

Figure 4.8.17

Answer 19

- $I_{200} = 50mA$

- $I_{400} = 25mA$
- $V_{src} = 10V$

20. For the circuit shown in Figure 4.8.18 , determine the current through each resistor and the source voltage.

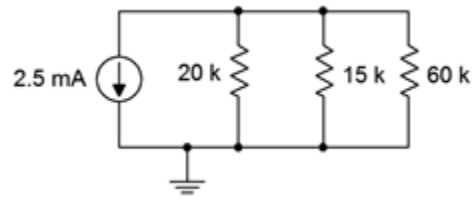

Figure 4.8.18

21. For the circuit shown in Figure 4.8.19 , determine the current through each resistor and the source voltage.

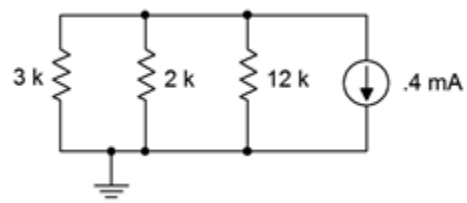

Figure 4.8.19

Answer 21

- $I_{3k} = 145.5uA$
- $I_{2k} = 218.2uA$
- $I_{12k} = 28.57uA$
- $V_{src} = 0.4364V$

22. For the circuit shown in Figure 4.8.20 , determine the current through each resistor and the source voltage.

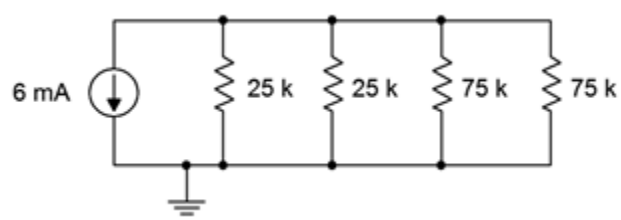

Figure 4.8.20

23. Referring to the circuit of Figure 4.8.20 , determine the resistor currents if the right-most 75 kΩ resistor is accidentally opened (i.e., unconnected). How do these results compare to those of problem 22?

Answer 23

- $I_{25k} = 2.571mA$
- $I_{75k} = 0.8571mA$
- Currents will be higher in the 25k resistors because there is one fewer path for current to go

24. Referring to the circuit of Figure 4.8.20 , determine the resistor currents if the right-most 75 kΩ resistor is accidentally shorted. How do these results compare to those of problems 22 and 23?

25. For the circuit shown in Figure 4.8.21 , determine the current through each resistor and the source voltage.

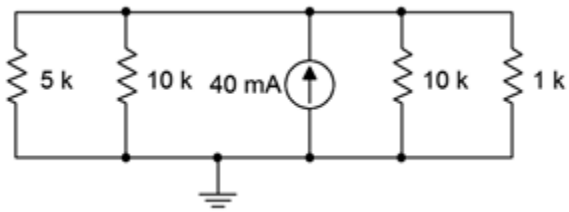

Figure 4.8.21

Answer 25

- $I_{5k} = 15.714mA$
- $I_{10k} = 2.857mA$
- $I_{1k} = 28.57mA$
- $V_{src} = 28.57V$

26. Given the circuit of Figure 4.8.22 , find the currents through the two resistors.

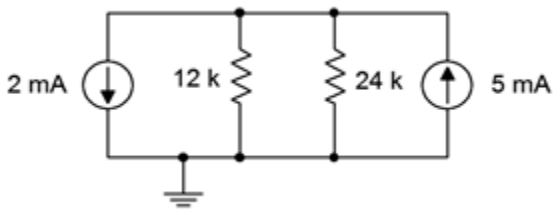

Figure 4.8.22

27. If the 5 mA current source shown in Figure 4.8.22 is accidentally wired in upside down, does the voltage across the 12 k Ω resistor become more positive or more negative with respect to ground?

Answer 27

- The voltage is larger, but now negative, so it becomes more negative

28. Given the circuit of Figure 4.8.23 , find the voltages across the three resistors.

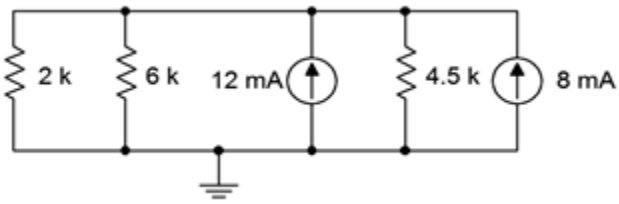

Figure 4.8.23

29. Find the currents through the three resistors in Figure 4.8.23 .

Answer 29

- $I_{2k} = 11.25mA$
- $I_{6k} = 3.75mA$
- $I_{4.5k} = 5mA$

Design

30. For the network shown in Figure 4.8.24 , determine a for values for R_1 given that R_2 is 12 kΩ and the equivalent combination is 8 kΩ.

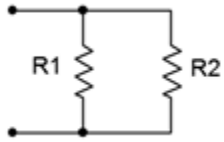

Figure 4.8.24

31. Add a third parallel resistor to the circuit of Figure 4.8.8 such that the source current is 10 mA.

Answer 31

- 1.714kΩ

32. Add a fourth parallel resistor to the circuit of Figure 4.8.10 such that the source current is 20 mA.

33. Consider the circuit shown in Figure 4.8.14 . Determine a new value for the current source such that the source voltage equals 10 volts.

Answer 33

- 6.667mA

34. Consider the circuit shown in Figure 4.8.16 . Determine a new value for the current source such that the source voltage equals 20 volts.

35. Given the circuit of Figure 4.8.25 , if the source is 6 volts and R_1 is 2 kΩ, what must be the value of R_2 if the total current exiting the source is 10 mA?

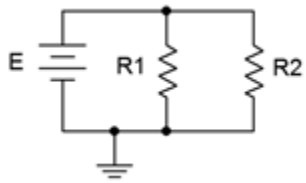

Figure 4.8.25

Answer 35

- 857Ω

36. For the circuit shown in Figure 4.8.26 , determine values for resistors R_2 and R_3 such that the current through R_2 is twice the current through R_1 and the current through R_3 is half the current through R_1. The source is 6 volts and R_1 is 2 kΩ.

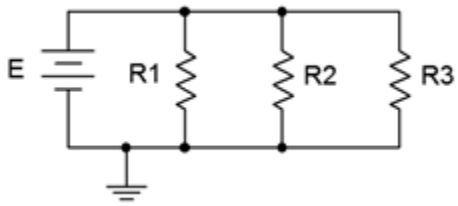

Figure 4.8.26

37. For the circuit shown in Figure 4.8.27 , determine values for resistors R_1 and R_2 such that the current through R_2 is twice the current through R_1. The source is 10 mA and R_1 is 6 kΩ.

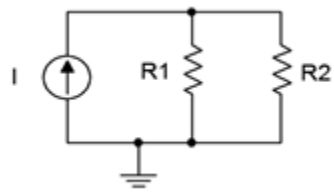

Figure 4.8.27

Answer 37

- 3kΩ

Challenge

38. For the circuit shown in Figure 4.8.12 , determine a new value for the 11 kΩ resistor such that the supply current is 50 mA.

39. For the circuit shown in Figure 4.8.14 , determine a new value for the 2 kΩ resistor such that the voltage drop across the 6 kΩ is 15 volts.

40. Consider the circuit shown in Figure 4.8.21 . If the current source was replaced with a voltage source, what value is needed so that the same currents flow through the resistors as in the original circuit?

41. For the network shown in Figure 4.8.24 , determine values for R_1 and R_2 such that R_2 is twice the size of R_1 and the equivalent combination is 6 kΩ.

42. Given the network of Figure 4.8.3 , is it possible to replace the 60 Ω resistor with another value such that the equivalent combination of the three resistors is 25 Ω? If so, what is that value?

43. Given the network of Figure 4.8.11 , is it possible to add a fifth parallel resistor such that the source current is 1 mA? If so, what is that value?

44. For the circuit shown in Figure 4.8.26 , determine values for the three resistors such that the current through R_1 is twice the current through R_2 and four times the current through R_3. The source is 12 volts and should produce a total of 9 mA of current.

45. For the circuit shown in Figure 4.8.27 determine values for the two resistors such that the current through R_1 is half the current through R_2. The source is 24 mA and should produce a drop of 16 volts across R_1.

46. Given three current sources with values of 1 mA, 2 mA and 7 mA; how would they need to be connected in order to deliver 4 volts across a 1 kΩ load resistor?

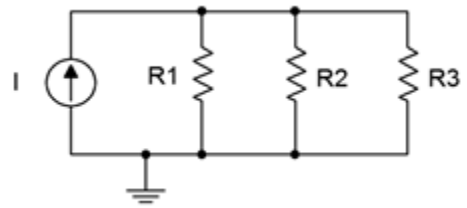

Figure 4.8.28

47. Consider the circuit of Figure 4.8.28 . Assume I is a 4 mA source. Using only 5% standard resistor values (see Appendix A),

pick values for the three resistors such that the voltage across R_1 is within 10% of 10 volts as long as the resistors are within tolerance.

Simulation

48. Verify the currents found in problem 11 via a DC simulation.

49. Verify the currents found in problem 15 via a DC simulation.

50. Verify the currents and voltages found in problem 17 via a DC simulation.

51. Verify the results found in problem 25 via a DC simulation.

52. Verify the results found in problem 27 via a DC simulation.

53. Perform a DC simulation on the design of problem 44 to verify its performance.

54. Perform a DC simulation on the design of problem 45 to verify its performance.

55. Perform a DC simulation on the design of problem 46 to verify its performance.

56. Perform a Monte Carlo or worst-case simulation on the design of problem 47 to verify its performance.

This page titled 4.8: Exercises is shared under a CC BY-NC-SA 4.0 license and was authored, remixed, and/or curated by James M. Fiore via source content that was edited to the style and standards of the LibreTexts platform.

5: SERIES-PARALLEL RESISTIVE CIRCUITS

Learning Objectives

After completing this chapter, you should be able to:

- Identify series-parallel resistive circuits that include a single effective voltage or current source.
- Compute component and node voltages for single-source series-parallel resistive networks.
- Compute branch currents for single-source series-parallel resistive networks.
- Break down series-parallel networks into smaller series-only and parallel-only sub-units, and utilize KVL, KCL and other previously established techniques to aid in the analysis of these circuits.

5.1: Introduction

5.2: Series-Parallel Connections

5.3: Simplifying Series-Parallel Components

5.4: Series-Parallel Analysis

5.5: Summary

5.6: Exercises

This page titled 5: Series-Parallel Resistive Circuits is shared under a CC BY-NC-SA 4.0 license and was authored, remixed, and/or curated by James M. Fiore via source content that was edited to the style and standards of the LibreTexts platform.

5.1: Introduction

In the preceding two chapters, series circuits and parallel circuits were examined. Each offered unique laws and rules for their configuration, such as Kirchhoff's voltage law and the current divider rule. Distinct techniques of analysis were offered to determine system current and voltage, and the currents and voltages associated with individual components. This almost mechanical approach was successful mainly because there are so few variations on the theme. In the case of a series circuit, more resistors might be added in the “daisy chain”, and likewise multiple voltage sources, but once you have experience with a few of these types of circuits, there is not much concern when simply adding more of the same because a pattern becomes apparent. The same holds true with parallel circuits: more resistors might be added as further “rungs on the ladder”, as well as multiple current sources similarly arranged, but again, once familiarity has been gained, obvious patterns emerge. This is not the case with series-parallel circuits, and thus, there are no simple recipes for our solution paths. Fortunately, laws and rules such as Ohm's law, KCL and KVL still hold true for these circuits, thus the focus shifts to their appropriate application.

To begin with, there are infinite variations of series-parallel circuits. This chapter deals with a subset, namely those that are driven by a single current or voltage source (after reducing trivial combinations), and which may be simplified using series and parallel resistor combinations. More complex configurations using multiple sources await in subsequent chapters. The key to analyzing basic series-parallel circuits is in recognizing portions of the circuit, or sub-circuits, that exhibit a series or parallel configuration by themselves, and then applying the series and parallel analysis rules to those sections. Ohm's law, KVL and KCL may be used in turn to “chip away” at the problem until all currents and voltages are found. As individual voltages and currents are determined, this makes it easier to apply these rules to determine other values. Given this observation, the number of potential solution paths tends to grow exponentially as the number of components increases. As a consequence, when faced with the same circuit, six people may solve it six different ways, no particular way being more or less correct than any other. The only thing we can say is that some solution paths might be more computationally efficient than others, meaning they take less work. Do not let this bother you. The fact that these circuits can be solved in a diverse number of ways is a strength, not a weakness. After all, you only need to recognize one of those ways, not all of them, in order to be successful. In this chapter's examples, various competing methods will be explored, but not every solution path will be spelled out for each one. Flexibility of thought and view will prove to be an asset.

This page titled 5.1: Introduction is shared under a CC BY-NC-SA 4.0 license and was authored, remixed, and/or curated by James M. Fiore via source content that was edited to the style and standards of the LibreTexts platform.

5.2: Series-Parallel Connections

A basic **series-parallel system** is shown in Figure 5.2.1 . It should be obvious that this system is neither a simple series connection nor a simple parallel connection, but rather some combination of the two. In order for it to be series, the current through each component would have to be the same. This does not have to be true here. Consider the connection node directly above block C. This also connects to items B, D and E. All we really know about that node is that there are four paths leading to it and that the four associated currents must sum to zero, thanks to KCL. There is nothing that requires the current through, say, block D to be the same as that through block E. Similarly, there is nothing that stipulates that the voltage across block C must be the same as that across block F. After all, that is the hallmark of a parallel configuration, and that would require those two blocks to be connected to the same two nodes, which they aren't.

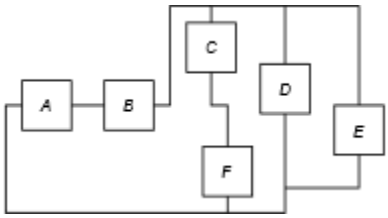

Figure 5.2.1 : A series-parallel configuration.

What we can say about the configuration of Figure 5.2.1 is that some of the components are in series among themselves, and some are in parallel among themselves. We might recognize these groupings as sub-circuits. For example, it is true that blocks A and B are in series with each other because the current through one of them must be the same as the current through the other. The same is true of blocks C and F; they are in series with each other. Similarly, we can say that blocks D and E are in parallel with each other because they must see the same voltage as they are each connected to the same two nodes.

This page titled 5.2: Series-Parallel Connections is shared under a CC BY-NC-SA 4.0 license and was authored, remixed, and/or curated by James M. Fiore via source content that was edited to the style and standards of the LibreTexts platform.

5.3: Simplifying Series-Parallel Components

We can go beyond the simple observations presented above. Precisely how we approach this will depend on the components represented by the blocks (most often resistors, but possibly a voltage source or a current source) and how they are wired together. For starters, if all of the items in a sub-circuit are of the same type, they can just be combined using the techniques discussed in the previous chapters. Resistors in series are added, as are voltage sources in series-being wary of polarity. Resistors in parallel are combined using conductance or the product-sum rule while parallel current sources are added, again being wary of polarity. Things get a little trickier when there is a mix, such as two resistors in series with a voltage source, or a resistor in parallel with a couple of current sources. Precisely how this sort of situation is handled will become apparent shortly.

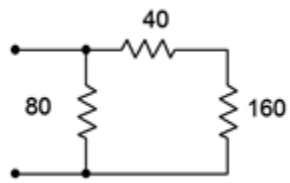

Figure 5.3.1 : A simple series-parallel resistor network.

To illustrate, let us consider the resistor configuration presented in Figure 5.3.1 . Imagine that an ohmmeter is connected to the two open terminals. What would it read? The ohmmeter would apply a small current to the circuit to determine the effective resistance of the group. The three resistors pictured here are not a simple series configuration because we can identify a current split at the $40\ \Omega$ and $80\ \Omega$ resistors. Similarly, it is not a parallel network because the $40\ \Omega$ and $160\ \Omega$ resistors are not both tied to the same two nodes. What we can say is that the $40\ \Omega$ and $160\ \Omega$ resistors are in series with each other as they must each see the same current. Thus, we can combine the two into a single equivalent resistance of $200\ \Omega$. This equivalent is in parallel with the $80\ \Omega$ resistor and $80 \parallel 200$ is approximately $57.14\ \Omega$. That's what the ohmmeter should read. Indeed, wherever we see this configuration with these precise values, we can replace it with a single resistor of $57.14\ \Omega$.

The simplification technique can be outlined as follows:

- Identify subgroups of resistors that exhibit series or parallel configurations within themselves.
- Replace the subgroups with a single equivalent resistance.
- Repeat the above steps until the circuit is reduced to a single resistance, or alternately, a simple series-only or parallel-only configuration.

The looping nature of the technique outlined above may need to be invoked many times, depending on the complexity of the network. In simpler networks, a single pass may be sufficient. Initially, it may be wise to redraw the circuit for each iteration of the loop. Eventually, with practice, this will not be needed except with the most complex networks. Let's look at a somewhat more involved example.

Example 5.3.1

A series-parallel resistor network is shown in Figure 5.3.2 . Determine its equivalent resistance.

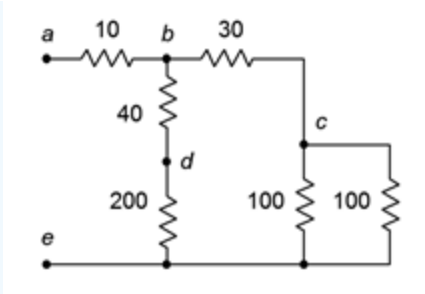

Figure 5.3.2 : Network for Example 5.3.1 .

The first step is to recognize those subgroups that are in series or in parallel with themselves. One obvious candidate is that the two 100 Ω resistors are in parallel with each other. Two resistors of equal value in parallel are equivalent to half the resistance, or 50 Ω in this case.

The other candidate is the 40 Ω, 200 Ω pair. These are in series. The equivalent resistance of the pair is the series combination, or 240 Ω.

There are no other subsets of resistors that can be reduced (yet). The network is redrawn in Figure 5.3.3 with the equivalent resistances. The process is now repeated.

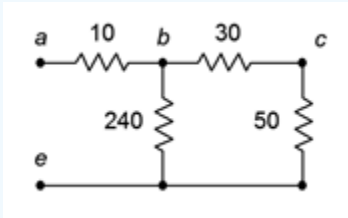

Figure 5.3.3 : Partially simplified network.

In the newly reduced network, the 50 Ω and 30 Ω resistances are in series, yielding 80 Ω.

Without redrawing, the process may be repeated again, this time the 240 Ω being in parallel with the new 80 Ω equivalent. 240 || 80 is equal to 60 Ω. This sequence has reduced the three right-most resistances down to one: the new 60 Ω equivalent.

Finally, the 60 Ω equivalent is in series with the 10 Ω resistor, yielding a final equivalent resistance of 70 Ω.

Ladders

A ladder is a unique series-parallel configuration. It is arranged in a cascade of series and parallel connections. Ladders are used in a variety of applications, one of which will be examined in the next section.

The name is obvious based on the appearance of the network. An example resistive ladder network is shown in Figure 5.3.4 . The main thing to note is that the ladder network consists of “sections loading sections” repeatedly. By loading, we mean that this element (the load) draws off current and power from the prior section. As a result, simple two-resistor voltage dividers cannot be used. For example, it is a common error to assume that R_1 and R_2 create a voltage divider which can be used to determine V_{bf} if V_{af} is known. Similarly, the uninitiated may believe incorrectly that R_3 and R_4, or R_5 and R_6 create voltage dividers.

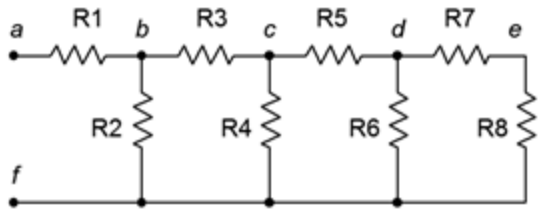

Figure 5.3.4 : A resistive ladder network.

In fact, the only proper voltage divider in this configuration is between R_7 and R_8. The reason for this becomes apparent if we imagine determining the equivalent resistance of the network by placing an ohmmeter at terminals a and f. The ohmmeter will apply a current to node a which passes through R_1. At node b this current splits, part going down R_2 and part continuing through R_3. Clearly then, R_1 and R_2 are not in series as they do not see the same current. Further, the current that flows through R_3 enters node c where it splits again, part down R_4 with the remainder flowing through R_5. Thus, R_3 and R_4 are not in series, either. The same sort of thing happens again at node d. This would continue for as many rungs as are on the ladder, the sole exception being the final two resistors which are in series (R_7 and R_8 here).

How then do we find the equivalent resistance of this network? We begin at the end farthest from the open terminals. We have already noted that R_7 and R_8 are in series. This pair, if treated as a single resistance, is in parallel with R_6, or $R_6||(R_7+R_8)$. This group of three is in series with R_5, yielding $R_5+R_6||(R_7+R_8)$[1]. This new group of four is in parallel with R_4, yielding $R_4||(R_5+R_6||(R_7+R+8))$. This group is in series with R_3, and that new group is in turn in parallel with R_2. Finally, that penultimate grouping is in series with R_1. Therefore, the equivalent resistance of the network is $R_1+R_2||(R_3+R_4||(R_5+R_6||(R_7+R_8)))$. Surely, it is a tad tedious to compute the value, but particularly difficult. A word to the wise: if the goal is determine the voltages at the various nodes or the myriad branch currents, it will be helpful to keep track of the equivalent resistances of the various groupings. For example, if V_{cf} is known and the goal is to find V_{df}, the voltage divider would be $R_6||(R_7+R_8)/(R_5+R_6||(R_7+R_8))$.

Example 5.3.2

A resistive ladder network is shown in Figure 5.3.5 . Determine its equivalent resistance.

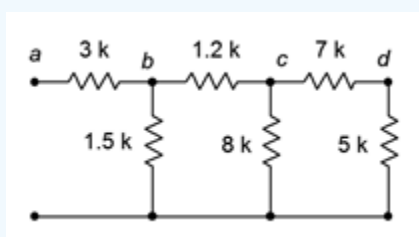

Figure 5.3.5 : Network for Example 5.3.2 .

Starting at the far end from the open terminals, we note that the 7 kΩ and 5 kΩ resistors are in series, yielding 12 kΩ. This is in parallel with the 8 kΩ. 12 k || 8 k is 4.8 kΩ. This is in series with the 1.2 kΩ yielding 6 kΩ. The 6 kΩ equivalent is in parallel with the 1.5 kΩ which yields 1.2 kΩ.

Finally, the 1.2 kΩ equivalent is in series with the 3 kΩ, yielding a final equivalent resistance of 4.2 kΩ.

Remember, always start at the far end and work toward the open terminals, i.e., the terminals into which you are trying to find the equivalent resistance.

Example 5.3.3

A resistive ladder network is shown in Figure 5.3.6 . Determine its equivalent resistance.

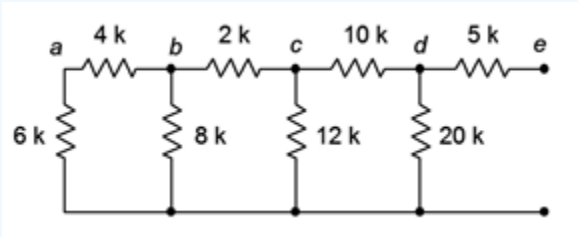

Figure 5.3.6 : Network for Example 5.3.3 .

The far end from the open terminals is the extreme left. First, the 6 kΩ and 4 kΩ resistors are in series, yielding 10 kΩ. This is in parallel with the 8 kΩ, achieving approximately 4.444 kΩ. In turn, this is in series with the 2 kΩ yielding 6.444 kΩ. That result is in parallel with the 12 kΩ which yields 4.193 kΩ. Placing this in series with the 10 kΩ resistor yields 14.193 kΩ. This is in parallel with the 20 kΩ yielding 8.302 kΩ.

Finally, the 8.302 kΩ equivalent is in series with the 5 kΩ, yielding a final equivalent resistance of approximately 13.3 kΩ.

References

[1]Recall that || has higher precedence than + or –, therefore || is performed first, rather like multiplication when mixed with addition and subtraction.

This page titled 5.3: Simplifying Series-Parallel Components is shared under a CC BY-NC-SA 4.0 license and was authored, remixed, and/or curated by James M. Fiore via source content that was edited to the style and standards of the LibreTexts platform.

5.4: Series-Parallel Analysis

Analysis of series-parallel networks involves recognizing those sub-circuits that are in series or that are in parallel among themselves, performing simplifications as needed, and winding up with a simple series-only or parallel-only equivalent. Then the various laws such as Ohm's law, KVL, KCL, VDR and CDR are applied to the various simplified networks to determine the parameters of interest. There is no single solution technique, each circuit being unique.

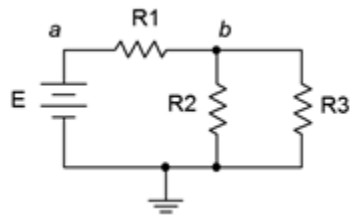

Figure 5.4.1 : A simple series-parallel circuit.

Let's begin by considering the circuit of Figure 5.4.1 . To review, this is neither just a series circuit nor just a parallel circuit. If it was a series circuit then the current through all components would have to be same, that is, there would no nodes where the current could divide. This is clearly not the case as the current flowing through R_1 can divide at node b, with one portion flowing down through R_2 and the remainder through R_3. On the other hand, if it was strictly parallel, then all of the components would have to exhibit the same voltage and therefore there would be only two connection points in the circuit. This is also not the case as there are three such points: a, b and ground.

What is true is that resistors R_2 and R_3 are in parallel. We know this because both components are attached to the same two nodes, b and ground, and must exhibit the same voltage, V_b. As such, we can find the equivalent resistance of this pair and treat the result as a single resistance, let's call it R_x. In this newly simplified circuit, Rx is in series with R_1 and the source, E. We have reduced the original circuit down to a simple series circuit and thus the series analysis rules may be applied.

There are many solution paths at this point. For example, we could find the total resistance, R_t, by adding R_1 to R_x. Dividing this by E yields the total current flowing out of the source, I_{total}. This current must flow through R_1 so Ohm's law can be used to find the voltage drop across R_1. This same current must be flowing through R_x, so Ohm's law can be used to find the associated voltage (V_b). The currents through R_2 and R_3 may then be found using Ohm's law for each resistor (e.g., the current through R_2 must be V_b/R_2). Alternately, these currents may be found by using the current divider rule between R_2 and R_3 (e.g., the current through R_2 must be $I_{total} \cdot R_1/(R_1 + R_2)$; remember, the current divider rule uses the ratio of the opposite resistor over the sum).

Another solution path would be to apply the voltage divider rule to R_1 and R_x in order to derive the two voltage drops (or the rule can be applied to find just one of the drops and the other voltage may be found by subtracting that from the source, an application of KVL). Once the voltages are determined, Ohm's law can be used to find the currents. If powers are needed, they are easily determined once the voltages and currents are found.

Example 5.4.1

A series-parallel circuit is shown in Figure 5.4.2 . Determine V_b.

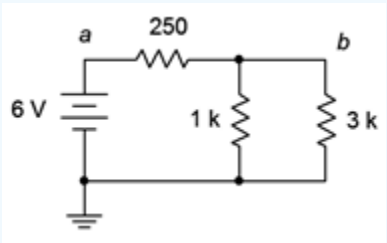

Figure 5.4.2 : Circuit for Example 5.4.1 .

As we are only interested in finding one voltage, the voltage divider rule is a good candidate. The 1 kΩ is in parallel with the 3 kΩ, yielding an equivalent resistance of 750 Ω. From here we apply VDR.

$$V_b = E\frac{R_{eq}}{R_1 + R_{eq}}$$

$$V_b = 6V\frac{750\Omega}{250\Omega + 750\Omega}$$

$$V_b = 4.5V$$

To clarify the current directions and voltage polarities, the circuit is redrawn and appropriately labeled in Figure 5.4.3 . We can crosscheck the answer in a variety of ways. For example, Figure 5.4.3 indicates, via KVL, that the voltage drop across the 250 Ω resistor plus V_b must equal the source voltage of 6 volts. Consequently, V_{250} must be 6 volts minus 4.5 volts, or 1.5 volts. Ohm's law then indicates that the current through the 250 Ω must be 1.5 V/250 Ω, or 6 milliamps. Based on the earlier resistive equivalence, the total resistance as seen by the source must be 250 Ω in series with 750 Ω, or 1 kΩ. This indicates the source current must be 6 V/1 kΩ, or 6 milliamps. As the source and the 250 Ω are in series, they must see the same current. This crosscheck shows that they do: happy happy joy joy.

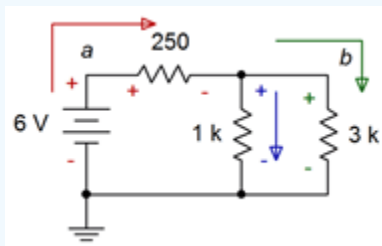

Figure 5.4.3 : Circuit for Example 5.4.1 with polarities and directions included.

We can go further and verify the currents via KCL. For the first parallel resistor we find:

$$I_{1k} = \frac{V_b}{1k\Omega}$$

$$I_{1k} = \frac{4.5V}{1k\Omega}$$

$$I_{1k} = 4.5mA$$

And for the second resistor we see:

$$I_{3k} = \frac{V_b}{1k\Omega}$$

$$I_{3k} = \frac{4.5V}{3k\Omega}$$

$$I_{3k} = 1.5mA$$

Obviously, these sum to the entering current of 6 mA.

Example 5.4.2

Determine V_b and the source current in the circuit of Figure 5.4.4 .

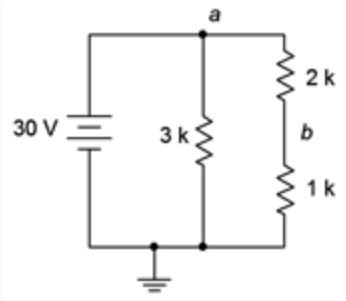

Figure 5.4.4 : Circuit for Example 5.4.2 .

In this circuit the 3 kΩ resistor is in parallel with the series combination of the 2 kΩ and 1 kΩ. This leads to an equivalent resistance of 3 kΩ in parallel with 3 kΩ, or 1.5 kΩ. From here we can find the source current.

$$I_s = \frac{E}{R_{Total}}$$

$$I_s = \frac{30V}{1.5k\Omega}$$

$$I_s = 20mA$$

This current should split evenly down the two vertical paths as they each present 3 kΩ of resistance (10 mA each achieves 30 volts for V_a, which is the source).

The voltage divider rule is a good choice for V_b as we know the applied voltage.

$$V_b = E\frac{R_{eq}}{R_1 + R_{eq}}$$

$$V_b = 30V\frac{1k\Omega}{1k\Omega + 2k\Omega}$$

$$V_b = 10V$$

For clarity, the circuit is redrawn and relabeled with current directions and voltage polarities in Figure 5.4.5 . As a further exercise, try to verify the answers above using alternate means, as illustrated in Exercise 5.4.

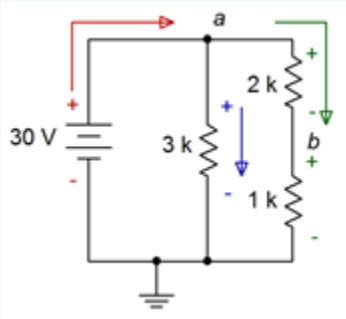

Figure 5.4.5 : Circuit for Example 5.4.2 with polarities and directions included.

As the circuit grows, more and more solution paths exist. Consider the circuit of Figure 5.4.6 . In this case, R_3 and R_4 are in parallel. This parallel combination is in series with R_2. Finally, this set of three resistors is in parallel with R_1 and E, reducing to a parallel circuit. Consequently, we know that the voltage across R_1 must be equal to E. Also, the currents through R_1 and R_2 must add up to the current exiting the source (KCL). Further, the currents through R_3 and R_4 must add up to the current flowing through R_2 (KCL). Also, the voltages across R_3 and R_4 must be the same (they are in parallel) and that this voltage plus the voltage across R_2 must equal E (KVL). One solution path would be to find the total resistance as seen by the source, $R_1||(R_2 + (R_3||R_4))$

, and use this to find the total current flowing out of the source. The current divider rule can then be used between R_1 and the equivalent resistance $(R_2 + (R_3||R_4))$. Ohm's law can be used subsequently to find various voltage drops. Alternately, the voltage divider rule can be used between R_2 and the parallel equivalent $(R_3||R_4)$ as this combination is driven by E. Knowing the voltages, the currents may be determined. With so many possible solution paths for large circuits, it is often worthwhile to take a moment to map out a strategy rather than just “diving in” and hoping it will all work out.

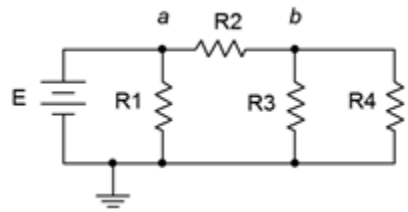

Figure 5.4.6 : A slightly more complex series-parallel circuit.

Example 5.4.3

The circuit of Figure 5.4.7 is the same as the resistive network presented in Example 5.3.1 but with the addition of a voltage source. Determine V_b, V_c, V_d, the source current I_s, and the current flowing through the 40 Ω resistor, I_{40}.

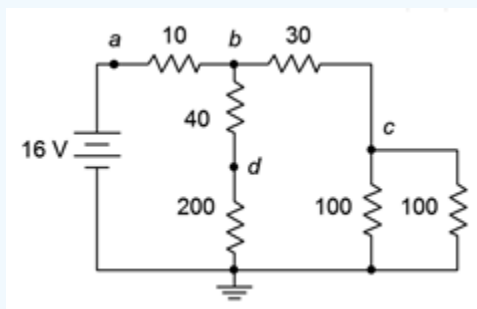

Figure 5.4.7 : Circuit for Example 5.4.3 .

Thanks to Example 5.3.1, the equivalent resistances of various portions have already been determined, saving some time. To reiterate, the pair of 100 Ω resistors are in parallel for 50 Ω. That's in series with the 30 Ω for 80 Ω. In the middle path, the 200 Ω and 40 Ω are in series, yielding 240 Ω. 240 || 80 = 60 Ω. This is in series with the 10 Ω, yielding a total resistance loading the source of 70 Ω.

$$I_s = \frac{E}{R_{Total}}$$

$$I_s = \frac{16V}{70\Omega}$$

$$I_s \approx 228.6mA$$

The three voltages can be quickly found via VDR as we know all of the associated sub-circuit resistances.

$$V_b = E\frac{R_x}{R_x + R_y}$$

$$V_b = 16V\frac{60\Omega}{60\Omega + 10\Omega}$$

$$V_b \approx 13.71V$$

$$V_c = V_b \frac{R_x}{R_x + R_y}$$

$$V_c = 13.71V \frac{50\Omega}{50\Omega + 30\Omega}$$

$$V_c \approx 8.57V$$

$$V_d = V_b \frac{R_x}{R_x + R_y}$$

$$V_d = 13.71V \frac{200\Omega}{200\Omega + 40\Omega}$$

$$V_d \approx 11.43V$$

Lastly, the current through the 40 Ω resistor can be found by dividing its voltage by its resistance. Its voltage is $V_b - V_d$. A quicker method is to note that because it is in series with the 240 Ω, their currents are the same.

$$I_{40} = \frac{V_b}{R_{Series}}$$

$$I_{40} = \frac{13.71V}{240\Omega}$$

$$I_{40} \approx 57.1mA$$

Once again the circuit is redrawn in Figure 5.4.8 to illustrate the current directions and voltage polarities. The usefulness of this will become even more apparent in the next example.

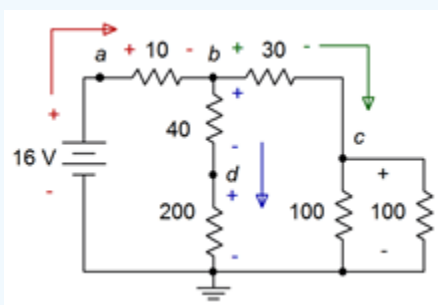

Figure 5.4.8 : Circuit for Example 5.4.3 with directions and polarities.

Example 5.4.4

Determine V_{ac} and the voltages across each resistor in the circuit of Figure 5.4.9 .

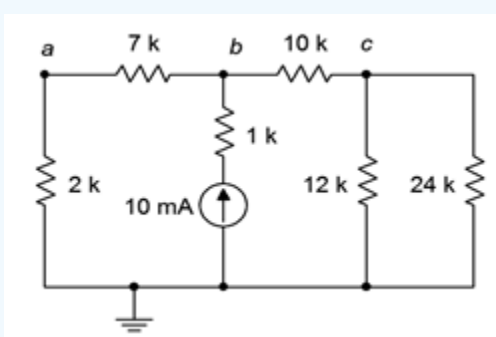

Figure 5.4.9 : Circuit for Example 5.4.3 .

This circuit is perhaps the most complex offered so far. It may not be immediately apparent what the voltage polarities are for the various resistors or the proper current directions. Without these data, it will be impossible to determine V_{ac}. To complicate matters, the voltage of interest is not ground referenced, but instead refers to two nodes located in arbitrary points of the circuit. It is worth recognizing that, by definition, $V_{ac} = V_a - V_c$, but how are those voltages determined?

To assist with this minor quandary, the circuit has been redrawn in Figure 5.4.10 . Note that the current source and associated 1 kΩ resistor have been flipped to the side, essentially trading places with the 2 kΩ and 7 kΩ series combination. This is entirely acceptable as both subgroups share node b and ground, meaning they are in parallel. Of course, the order of parallel elements in a situation like this does not matter. This orientation, having the source at one end of the circuit, tends to make visualization of current flows a little easier.

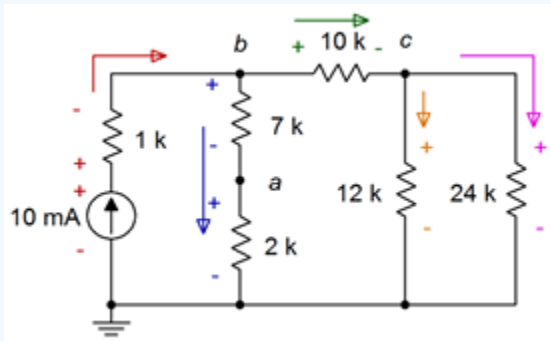

Figure 5.4.10 : Circuit for Example 5.4.3 redrawn and with polarities and current directions added.

In any case, the current exits the source and then splits at node b, some heading through the 10 kΩ with the rest flowing down the 7 kΩ with 2 kΩ series combo. At node c the current that entered the 10 kΩ splits again, flowing down into the parallel subgroup of the 12 kΩ and 24 kΩ. Knowing the current directions, the voltage polarities are determined directly.

Now that the circuit has been redrawn, several solution paths might come to mind. For starters, the voltage drop across the 1 kΩ is trivial as both its current and resistance are known. From there, a current divider can be used to find the current flowing down into the series 7 kΩ plus 2 kΩ combo. Ohm's law could then be used to find their voltages. Following that, KCL can be used to find the current through the 10 kΩ (and thus its voltage), and then Ohm's law can be applied to find V_c by treating the two right-most parallel resistors as a single unit.

Another solution path would be to determine the equivalent resistance that loads the current source. This allows the source voltage to be determined, after which a voltage divider may be applied between the 1 kΩ and the remaining five resistors to find V_b. From there, two more voltage dividers can be used to find V_a and V_c which will allow determination of the remaining resistor voltages via KVL. There are other possible paths as well but for lack of a better reason, we shall chase the first path that was outlined.

Before getting too deep, it would be wise to determine the equivalent resistances of a few subgroups. First, the 12 kΩ || 24 kΩ combo reduces down to 8 kΩ. This is in series with the 10 kΩ, leaving 18 kΩ for the three right-most resistors. In the middle branch, the 2 kΩ + 7 kΩ series combo is equivalent to 9 kΩ. The parallel combination of 9 kΩ || 18 kΩ yields 6 kΩ. Finally, this last bit is in series with the 1 kΩ producing 7 kΩ for the equivalent resistance of all resistors.

The source voltage and the voltage across the 1 kΩ resistor are determined via Ohm's law:

$$V_{source} = I_{source} \times R_{equivalent}$$

$$V_{source} = 10mA \times 7k\Omega$$

$$V_{source} = 70V$$

$$V_{1k} = I_{source} \times R$$

$$V_{1k} = 10mA \times 1k\Omega$$

$$V_{1k} = 10V$$

As the source produces 70 volts and the drop on the 1 kΩ is 10 volts, then by KVL, V_b must be 70 volts – 10 volts, or 60 volts (which will be useful for a crosscheck in a moment). Using a current divider, the 10 mA source splits between the middle and right branches. The equivalent resistances of those branches are 9 kΩ and 18 kΩ, as found earlier.

$$I_{middle} = I_{source}\frac{R_{right}}{R_{right} + R_{middle}}$$

$$I_{middle} = 10mA\frac{18k\Omega}{18k\Omega + 9k\Omega}$$

$$I_{middle} \approx 6.667mA$$

Via KCL, the right branch current must be 10 mA – 6.667 mA, or approximately 3.333 mA. As a crosscheck, if 6.667 mA passes through a total of 9 kΩ, that produces a voltage drop of 60 volts, exactly as expected from the earlier calculation for node b. At this point, the current through each resistor is known (treating the 12 kΩ || 24 kΩ combo as a unit) and therefore Ohm's law may be used to determine their voltage drops. They are summarized below.

$$V_{7k} \approx 46.67V$$

$$V_{2k} \approx 13.33V$$

$$V_{10k} \approx 33.33V$$

$$V_{12k} = V_{24k} \approx 26.67V$$

Finally, to determine V_{ac} we know that $V_{ac} = V_a - V_c$, and by observation V_a is the drop across the 2 kΩ while V_c is the drop across the 12 kΩ || 24 kΩ combo.

$$V_{ac} = V_a - V_c$$

$$V_{ac} \approx 13.33V - 26.67V$$

$$V_{ac} \approx -13.33V$$

Do not let the negative sign be bothersome. All it indicates is that node a is at a lower potential than node c, i.e., that node a is 13.33 volts below node c. It is also purely coincidental that V_{ac} and V_a have the same magnitude. In the lab, if a voltmeter is connected such that the red (positive) lead is attached to node a and the black (negative or reference) lead is attached to node c, the meter will show a negative value. If the leads are connected in reverse, thus measuring V_{ca}, the voltage will show up as positive (meaning that node c is higher in potential than node a, the reverse way of looking at the situation)[1].

Any Route Works

In the example just completed it was noted that, by definition, $V_{ac} = V_a - V_c$, and this dictated the method employed to find said voltage. It turns out that this is just one of many ways of determining a voltage from one point to another. In general:

$$\text{To find some voltage } V_{XY}, \text{start at point X and proceed along any convenient route to Y, subtracting voltage rises (polarities of} - \text{t}$$

In the prior example, an obvious route for V_{ac} would be to go down the 2 kΩ and then up the 12 kΩ. That gives a drop of approximately13.33 volts (positive). Going up the 12 kΩ produces a rise of approximately 26.67 volts (negative). The result is approximately –13.33 volts, as previously calculated. The technique states that any route may be used, no matter how inefficient or wacky it might be. To verify this, one odd route might be to go up the 7 kΩ, down through the 1 kΩ and source, and then up through the 24 kΩ. The summation would be – 46.67 – 10 + 70 – 26.67, or approximately –13.33 volts once again. An easy way to remember whether the potential is added or subtracted is to just look at the polarity sign where the component is entered along your chosen route.

R-2R Ladder

As promised earlier in the chapter, it's time to look at a ladder network. While ladders can use any resistance values desired, certain ratios turn out to be eminently practical. Of particular note is the R-2R ladder, an example of which is shown in Figure 5.4.11 , and which is being driven by a current source. In this configuration, only two different resistor values are used; some initial value and a second value of precisely twice that size. As drawn in Figure 5.4.11 , all horizontal resistors use value R (6 kΩ here) while all of the vertical resistors use 2R (12 kΩ here) with the exception of the very last, or terminating, resistor which uses R.

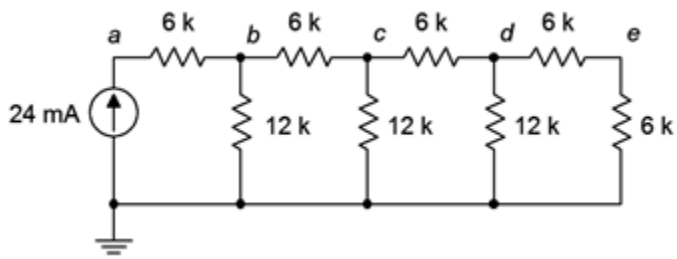

Figure 5.4.11 : An R-2R ladder network.

It turns out that this arrangement offers something very unique: a halving of successive node voltages and branch currents. This is extremely useful in digital to analog conversion circuits; the sort of hardware that would turn the digital bits of an MP3 or WAV file into listenable analog signals to feed loudspeakers or headphones.

Here is how it works. Starting at the far right end, it should be obvious that the last two 6 kΩ resistors comprise a 50% voltage divider, and thus V_e will half of V_d. The combination of the final three resistors works out to 12 kΩ || (6 kΩ + 6 kΩ), or 6 kΩ again. Thus, the divider from c to d is also 50%. This process repeats as we move to the left, each equivalent working out to R and resulting in a 50% voltage divider. It will not matter what value is chosen for R. As long as 2R is used for the other set of resistors, the result will always be successive 50% voltage dividers.

Example 5.4.5

Determine all lettered node voltages in the circuit of Figure 5.4.11 .

Continuing the prior analysis, the entire resistor network presents an equivalent resistance of 12 kΩ. The node a voltage is determined by Ohm's law:

$$V_a = I \times R$$

$$V_a = 24mA \times 12k\Omega$$

$$V_a = 288V$$

The prior analysis indicated that the subsequent node voltages should be, from left to right, 144 volts, 72 volts, 36 volts and 18 volts. A quick check follows. The source of 24 mA flows into the left-most 6 kΩ, producing a drop of 144 volts by Ohm's law. This can be subtracted from V_a (288 V) to arrive at V_b, or 144 volts, or half of the prior node voltage, as expected. The current through the left-most vertical resistor must be V_b/12 kΩ, or 12 mA. That's half of the entering current, as expected. KCL indicates that the remaining current, 24 mA – 12 mA, or 12 mA, must be flowing into the second 6 kΩ between nodes b and c. This will produce a voltage drop of 72 volts across that resistor. In other words, V_c must be 72 volts less than V_b (144 volts), or 72 volts. This is half of V_b, as expected. Likewise, the current flowing down through the second 12 kΩ must be V_c /12 kΩ, or 6 mA, once again half of the preceding current, as expected. The process continues as we move to the right, each subsequent node seeing half the voltage of the prior node and each current getting cut in half as well.

Computer Simulation

In order to verify the results of Example 5.4.4 , the R-2R ladder circuit is entered into a simulator, as shown in Figure 5.4.12 . The

numbered nodes 1 through 5 in the simulation schematic correspond to the lettered nodes of the original circuit, a through e, respectively. This is one example where the use of virtual instruments would result in a very cluttered display with five multimeters. Consequently, the simulation uses a DC operating point analysis with a single output window, as shown in Figure 5.4.13 .

Although the node numbers are not in ascending order, the voltages are a perfect match to the results computed previously. Each successive node sees half the voltage of the prior node. Although not explicitly listed here, it should be obvious that the currents will also be cut in half when progressing from left to right, via a quick application of Ohm's law.

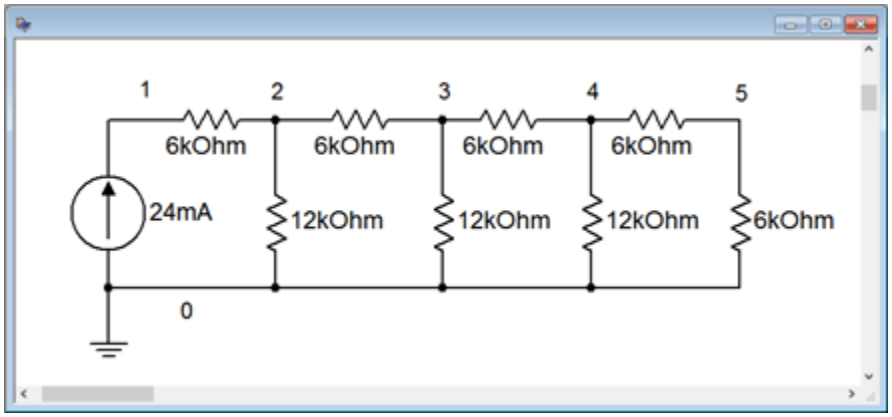

Figure 5.4.12 : The circuit of Example 5.4.3 in a simulator.

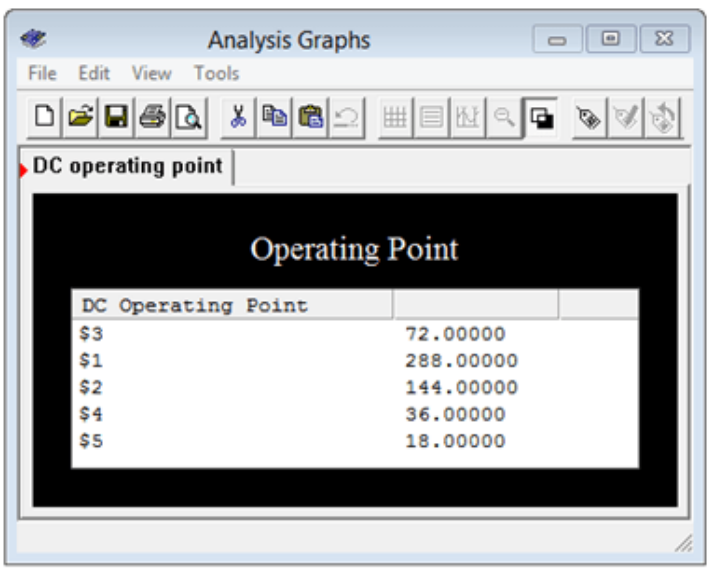

Figure 5.4.13 : Simulation results of the circuit of Example 5.4.4 .

Bridges

A bridge is a particular series-parallel configuration consisting of two pairs of series connected elements placed in parallel. An example of a resistive bridge being driven by a voltage source is shown in Figure 5.4.14 . In this circuit, R_1 and R_2 create one series connection while R_2 and R_3 create the other. The two pairs are then placed in parallel. While this circuit is shown with a voltage source, it could also be driven by a current source. Other elements might also be added.

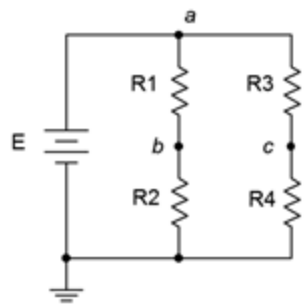

Figure 5.4.14 : A resistive bridge network.

A typical use for a bridge is the measurement of some environmental quantity. As stated in Chapter 2, there are certain resistive devices that are sensitive to environmental change. Examples include photoresistors, whose resistance is a function of light level; and thermistors, whose resistance is a function of temperature.

To understand the operation, the voltages V_b and V_c are established by the voltage dividers comprised of R_1 and R_2; and R_3 and R_4, respectively. With ordinary resistors, these voltages would be unchanging and therefore V_{bc} would also be a fixed value. We shall set it up such that V_b and V_c are the same voltage, and thus V_{bc} will be zero. Now assume that we replace R_1 with a photoresistor. As the light level increases, its resistance decreases. This will cause V_b to rise which will cause V_{bc} to go positive. If the light level decreases, the resistance of R_1 will increase, forcing V_b to drop which will cause V_{bc} to go negative. The greater the change in light, the larger V_{bc} will be, and its sign indicates whether the light level has increased or decreased compared to the original set point. By simply placing some manner of voltmeter between points b and c, we can create a display that indicates light levels.

If we want to flip the sign, we would place the photoresistor in the position of R_2 instead of R_1. Further, it is possible to increase the sensitivity by using sensors at opposite corners (e.g., R_1 and R_4), and comparative or differential measurements are possible by using both sides (e.g., R_1 with R_3).

Example 5.4.6

Determine V_{bc} in the circuit of Figure 5.4.15 .

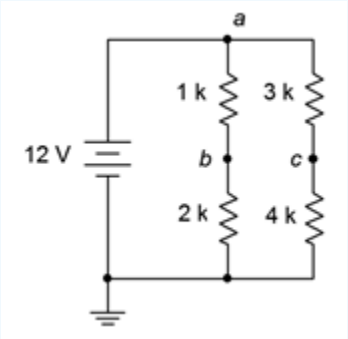

Figure 5.4.15 : Circuit for Example 5.4.5 .

Perhaps the most straightforward way to do this is to treat each half as a voltage divider and then subtract V_c from V_b.

$$V_b = E\frac{R_2}{R_2 + R_1}$$

$$V_b = 12V\frac{2k\Omega}{2k\Omega + 1k\Omega}$$

$$V_b = 8V$$

$$V_c = E\frac{R_4}{R_4 + R_3}$$

$$V_c = 12V\frac{4k\Omega}{4k\Omega + 3k\Omega}$$

$$V_c \approx 6.857V$$

Thus, V_{bc} is 8 volts minus 6.857 volts, or 1.143 volts.

Computer Simulation

In order to verify the results of Example 5.4.5 , the bridge network of Figure 5.4.15 is entered into a simulator, as depicted in Figure 5.4.16 .

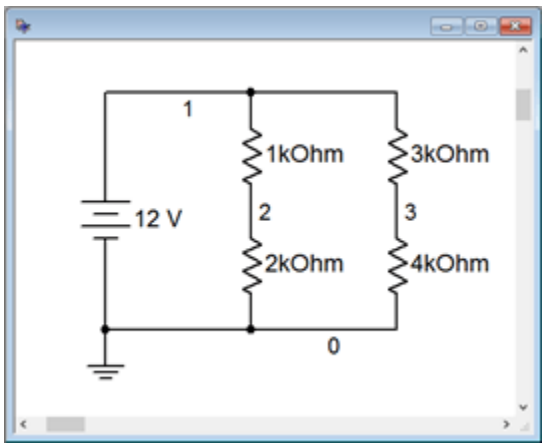

Figure 5.4.16 : The circuit of Example 5.4.5 in a simulator.

A DC operating point analysis is run and the results are shown in Figure 5.4.17 . The voltages are precisely as expected.

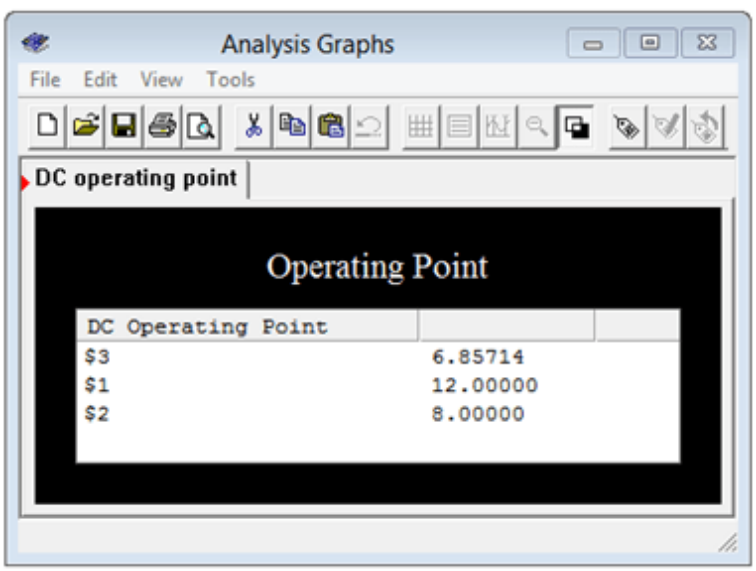

Figure 5.4.17 : Simulation results for the bridge circuit of Example 5.4.5 .

Final Comments

Series-parallel simplification techniques will not work for all circuits. Complex multi-source circuits and some resistive networks such as delta configurations or five-element bridge configurations require other techniques that will be addressed in later chapters.

References

[1]Or, if you prefer this situation posed as a question: When standing normally, is your head above your feet or are your feet below your head? Answer: Yes!

This page titled 5.4: Series-Parallel Analysis is shared under a CC BY-NC-SA 4.0 license and was authored, remixed, and/or curated by James M. Fiore via source content that was edited to the style and standards of the LibreTexts platform.

5.5: Summary

In this chapter we have determined how to identify basic series-parallel networks driven by a single effective voltage or current source. A key element here is to identify sub-circuits or subgroups of resistors that are comprised of either series-only or parallel-only configurations within themselves. These groupings can then be reduced to equivalent resistances using series and parallel combination techniques examined in earlier chapters. This process may be repeated until the entire circuit is simplified down to either a single series loop or parallel arrangement of resistors driven by a voltage or current source.

Once a circuit has been simplified, series and parallel analysis techniques, and laws such as Ohm's law, KVL, KCL, VDR and CDR, may be employed to determine various voltages and currents in the simplified equivalent. Given these results, the circuit may be expanded back into its original form in stages, reapplying these rules and techniques to determine voltages and currents within the sub-circuits. The process may be iterated until every current and voltage in the original circuit is discovered, if desired. Once these values are determined, power calculations are trivial.

There is an infinite variety of series-parallel configurations and consequently no single solution technique will work for all of them. Indeed, the more complex the circuit, the more solution paths there are for that circuit. It is therefore wise to plan some strategy for a solution instead of randomly “diving in” in order to ease the ultimate effort.

Two series-parallel configurations of note are the ladder network and the bridge network. A resistive ladder may be used to derive several different currents or voltages from a single source; the R-2R variation being particularly useful in that it divides the source down by powers of two. A basic resistive bridge is comprised of four elements arranged as a pair of series resistors in parallel with another pair of series resistors. Bridges can be used as part of a measurement scheme. For example, one or more of the resistors could be environmentally sensitive, such as a photoresistor, force sensing resistor or thermistor. As the associated variable changes, the resistance of the sensor changes which unbalances the bridge, and the resulting voltage indicates both the magnitude and sign of said environmental change.

Review Questions

1. In general, describe the process of reducing a series-parallel resistive network down to a single equivalent resistance.

2. Do Ohm's law, KVL and KCL still apply in series-parallel networks? Why?

3. Is there a finite number of variations of series-parallel networks? Why/why not?

4. Describe the primary functional characteristic of an R-2R ladder network.

5. What is meant by the terms “load” and “loading”, as in “R_1 loads R_2”?

6. How might a bridge network be used to sense changes in temperature?

7. Describe a general procedure to find the voltage between two arbitrary points in a series-parallel circuit.

This page titled 5.5: Summary is shared under a CC BY-NC-SA 4.0 license and was authored, remixed, and/or curated by James M. Fiore via source content that was edited to the style and standards of the LibreTexts platform.

5.6: Exercises

Analysis

1. In the circuit of Figure 5.6.1 , which individual resistors are strictly in series and which are in parallel?

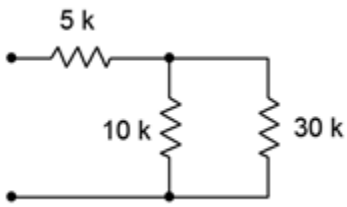

Figure 5.6.1

2. In the circuit of Figure 5.6.2 , which individual resistors are strictly in series and which are in parallel?

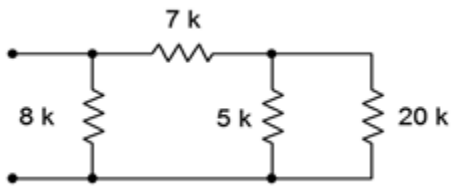

Figure 5.6.2

3. In the circuit of Figure 5.6.3 , which individual resistors are strictly in series and which are in parallel?

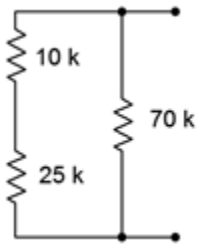

Figure 5.6.3

4. In the circuit of Figure 5.6.4 , which individual resistors are strictly in series and which are in parallel?

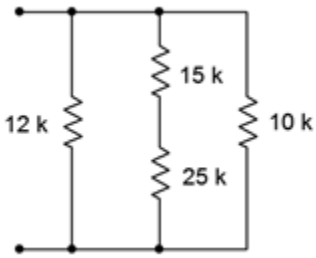

Figure 5.6.4

5. In the circuit of Figure 5.6.5 , which individual resistors are strictly in series and which are in parallel?

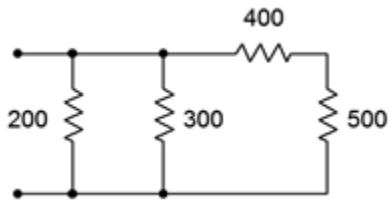

Figure 5.6.5

6. In the circuit of Figure 5.6.6 , which individual resistors are strictly in series and which are in parallel?

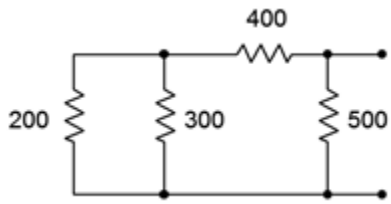

Figure 5.6.6

7. In the circuit of Figure 5.6.7 , which individual resistors are strictly in series and which are in parallel?

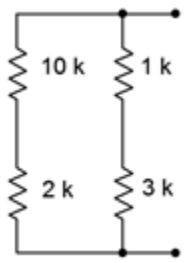

Figure 5.6.7

8. In the circuit of Figure 5.6.8 , which individual resistors are strictly in series and which are in parallel?

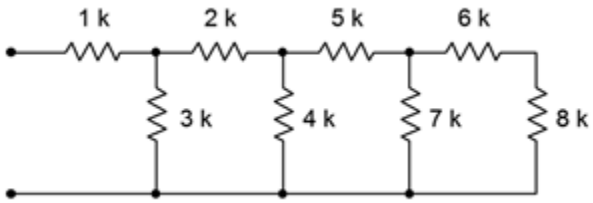

Figure 5.6.8

9. Determine the equivalent resistance of the network shown in Figure 5.6.1 (i.e., as if an ohmmeter is connected to the two terminals).

10. Determine the equivalent resistance of the network shown in Figure 5.6.2 .

11. Determine the equivalent resistance of the network shown in Figure 5.6.3 .

12. Determine the equivalent resistance of the network shown in Figure 5.6.4 .

13. Determine the equivalent resistance of the network shown in Figure 5.6.5 .

14. Determine the equivalent resistance of the network shown in Figure 5.6.6 .

15. Determine the equivalent resistance of the network shown in Figure 5.6.7 .

16. Determine the equivalent resistance of the network shown in Figure 5.6.8 .

17. For the circuit of Figure 5.6.9 , find voltages V_a, V_b and V_{ab}.

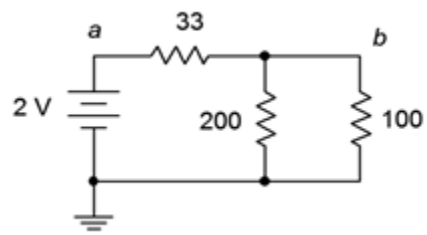

Figure 5.6.9

18. For the circuit of Figure 5.6.9 , find the current through each resistor.

19. For the circuit of Figure 5.6.10 , find the current through each resistor.

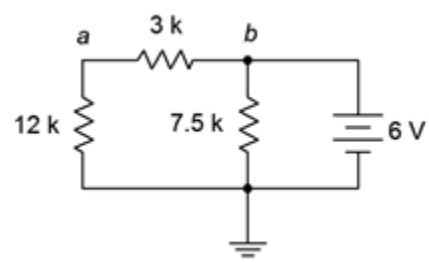

Figure 5.6.10

20. For the circuit of Figure 5.6.10 , find voltages V_a, V_b and V_{ab}.

21. For the circuit of Figure 5.6.11 , find voltages V_a, V_b and V_{ab}.

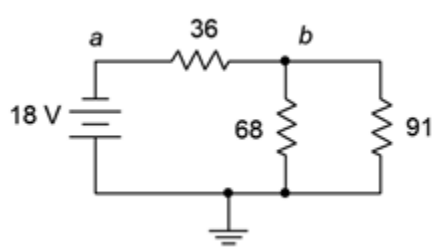

Figure 5.6.11

22. For the circuit of Figure 5.6.11 , find the current through each resistor.

23. For the circuit of Figure 5.6.12 , find the current through each resistor.

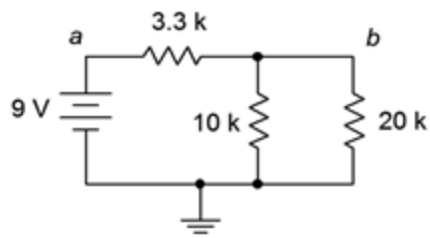

Figure 5.6.12

24. For the circuit of Figure 5.6.12 , find voltages V_a, V_b and V_{ab}.

25. In the circuit of Figure 5.6.13 , find voltages V_a, V_b and V_{ab}.

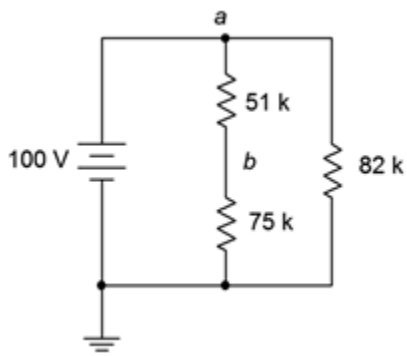

Figure 5.6.13

26. In the circuit of Figure 5.6.13 , find the current through each resistor.

27. In the circuit of Figure 5.6.14 , find the current through each resistor.

28. In the circuit of Figure 5.6.14 , find voltages V_a, V_b and V_{ab}.

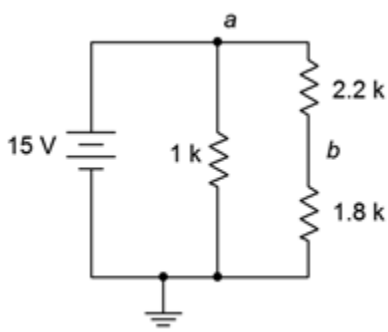

Figure 5.6.14

29. For the circuit of Figure 5.6.15 , find voltages V_b, V_c and V_{cb}.

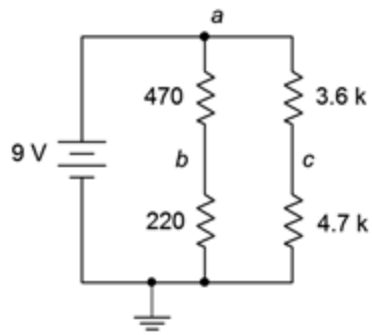

Figure 5.6.15

30. For the circuit of Figure 5.6.15 , find the current through the 470 Ω and 3.6 kΩ resistors along with the source current.

31. For the circuit of Figure 5.6.16 , find the current through the 2 kΩ and 5.1 kΩ resistors along with the source current.

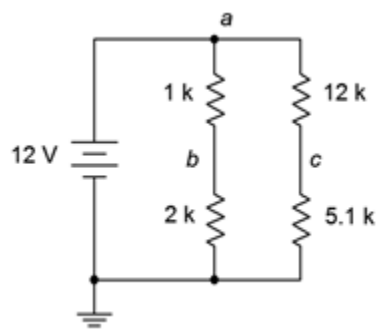

Figure 5.6.16

32. For the circuit of Figure 5.6.16 , find voltages V_c, V_b, V_{bc} and V_{ab}.

33. For the circuit of Figure 5.6.17 , find voltages V_a and V_b.

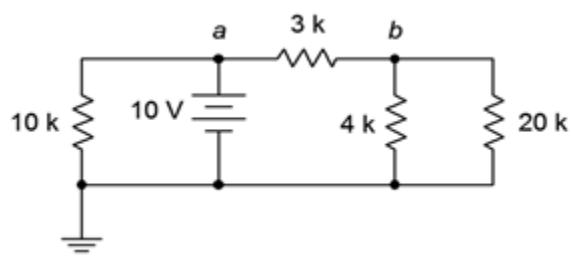

Figure 5.6.17

34. For the circuit of Figure 5.6.17 , find the current through the 10 kΩ and 4 kΩ resistors along with the source current.

35. For the circuit of Figure 5.6.18 , find the current through the 30 kΩ and the left-most 36 kΩ resistors along with the source current.

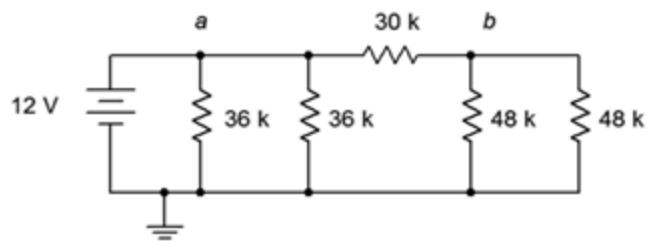

Figure 5.6.18

36. For the circuit of Figure 5.6.18 , find voltages V_a, V_b and V_{ab}.

37. In the circuit of Figure 5.6.18 , must the currents through the two 36 kΩ resistors be the same? Why/why not?

38. In the circuit of Figure 5.6.18 , must the currents through the two 48 kΩ resistors be the same? Further, must these currents be the same as the currents through the two 36 kΩ resistors Why/why not?

39. For the circuit of Figure 5.6.19 , find voltages V_a, V_b and V_{ab}.

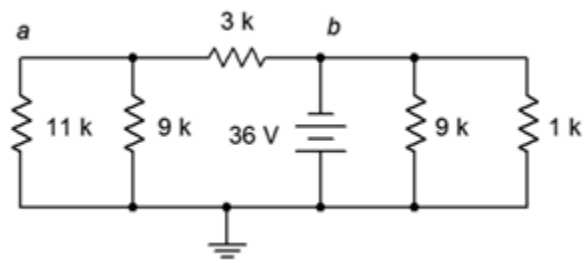

Figure 5.6.19

40. For the circuit of Figure 5.6.19 , find the current through the 3 kΩ, 11 kΩ, and both 9 kΩ resistors.

41. Given the circuit of Figure 5.6.20 , find the current through the 47 kΩ, 5.1 kΩ, and 3.9 kΩ resistors.

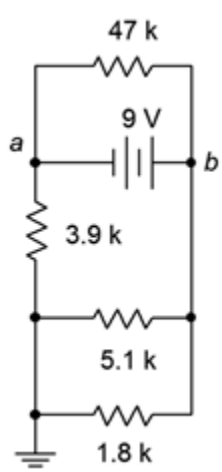

Figure 5.6.20

42. Given the circuit of Figure 5.6.20 , find voltages V_a, V_b and V_{ab}.

43. For the circuit of Figure 5.6.21 , find voltages V_b, V_c and V_d.

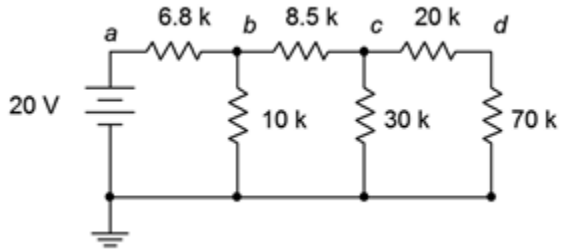

Figure 5.6.21

44. For the circuit of Figure 5.6.21 , find the current through the 6.8 kΩ, 8.5 kΩ, and 20 kΩ resistors.

45. The circuit of Figure 5.6.22 is called an R-2R ladder. Find the current through each of the 60 kΩ resistors.

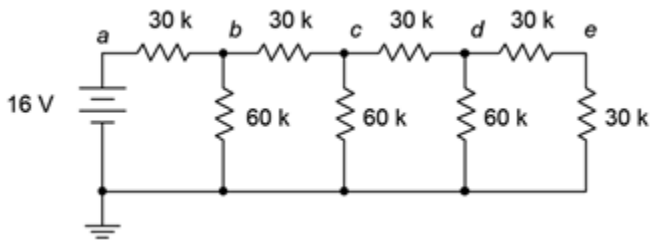

Figure 5.6.22

46. Given the circuit of Figure 5.6.22 , find voltages V_b, V_c, V_d and V_e. What is unique about this configuration?

47. For the circuit of Figure 5.6.23 , find voltages V_a, V_b and V_{ab}.

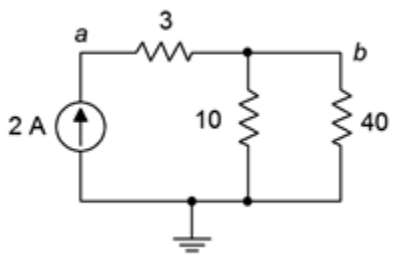

Figure 5.6.23

48. For the circuit of Figure 5.6.23 , find the current through each of the resistors.

49. For the circuit of Figure 5.6.24 , find the current through each of the resistors.

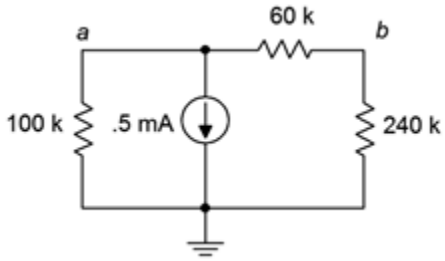

Figure 5.6.24

50. For the circuit of Figure 5.6.24 , find voltages V_a, V_b and V_{ab}.

51. Given the circuit of Figure 5.6.25 , find voltages V_a, V_b and V_{ab}.

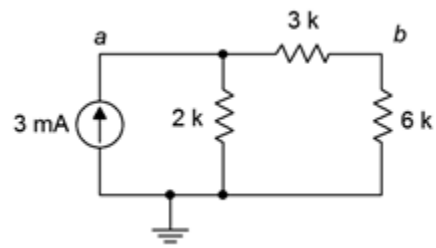

Figure 5.6.25

52. Given the circuit of Figure 5.6.25 , find the current through each of the resistors.

53. For the circuit of Figure 5.6.26 , find the current through the 200 Ω, 400 Ω, and 100 Ω resistors.

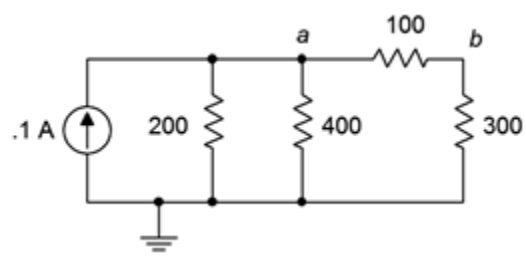

Figure 5.6.26

54. For the circuit of Figure 5.6.26 , find voltages V_a, V_b and V_{ab}.

55. Given the circuit of Figure 5.6.27 , find voltages V_a, V_b and V_{ab}.

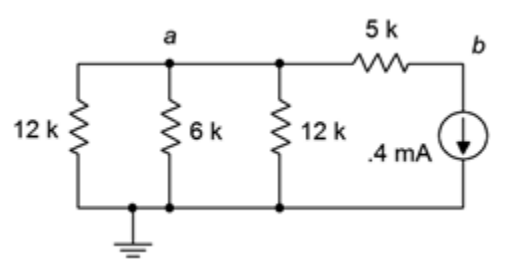

Figure 5.6.27

56. Given the circuit of Figure 5.6.27 , find the current through the 5 kΩ, and 6 kΩ resistors.

57. For the circuit of Figure 5.6.28 , find the current through the 9 kΩ and rightmost 82 kΩ resistors.

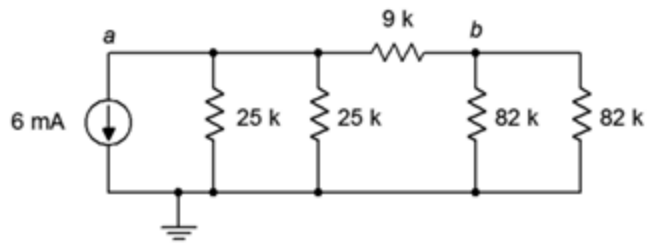

Figure 5.6.28

58. For the circuit of Figure 5.6.28 , find voltages V_a, V_b and V_{ab}.

59. Must the current through the 82 kΩ resistors be identical in the circuit of 4.8.6? Why/why not?

60. Must the current through the 25 kΩ resistors be identical in the circuit of 4.8.6? Must they be the same as the currents through the 82 kΩ resistors? Why/why not?

61. For the circuit of Figure 5.6.29 , find voltages V_a, V_b and V_{ab}.

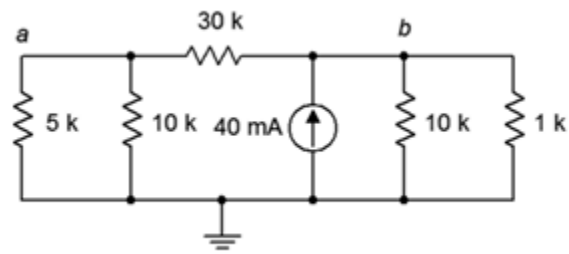

Figure 5.6.29

62. For the circuit of Figure 5.6.29 , find the current through the 30 kΩ, 5 kΩ, and 1 kΩ resistors.

63. For the circuit of Figure 5.6.30 , find the current through the 1 kΩ, 2.2 kΩ, and 18 kΩ resistors.

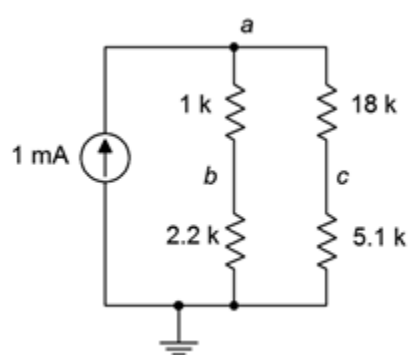

Figure 5.6.30

64. For the circuit of Figure 5.6.30 , find voltages V_a, V_b and V_c.

65. Given the circuit of Figure 5.6.31 , find voltages V_a, V_b and V_{ab}.

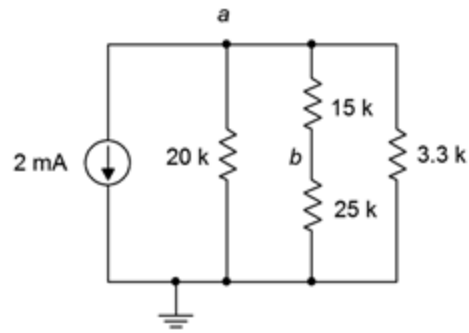

Figure 5.6.31

66. Given the circuit of Figure 5.6.31 , find the current through the 20 kΩ, 15 kΩ, and 3.3 kΩ resistors.

67. The circuit of Figure 5.6.32 is referred to as an R-2R ladder network. Find the current through each of the 4 kΩ resistors.

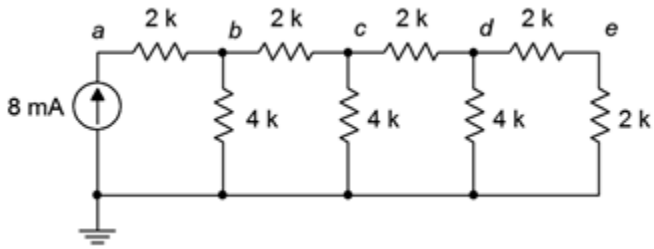

Figure 5.6.32

68. For the circuit of Figure 5.6.32 , find voltages V_a, V_b and V_{ab}. What is the unique characteristic of this configuration?

Design

69. Determine a new value for the 33 Ω resistor in Figure 5.6.9 such that the source current is 10 mA.

70. Determine a new value for the 20 kΩ resistor in Figure 5.6.12 such that V_b is 4 volts.

71. Determine a new value for the 470 Ω resistor in Figure 5.6.15 such that V_b is 6 volts.

72. Determine a new value for the 1 kΩ resistor in Figure 5.6.14 such that the source current is 20 mA.

73. Determine a new value for the 12 kΩ resistor in Figure 5.6.16 such that V_{bc} is 0 volts.

74. Given the circuit of Figure 5.6.24 , determine a new value for the 100 k Ω resistor such that V_a is 75 volts.

75. Given the circuit of Figure 5.6.23 , determine a new value for the current source such that V_b is 8 volts.

76. Determine a new value for the 2.2 kΩ resistor in Figure 5.6.30 such that V_{bc} is 0 volts.

77. Given the circuit of Figure 5.6.32 , determine a new value for the current source such that V_e is 1 volt.

Challenge

78. Utilizing only 1 kΩ resistors, create a series-parallel combination that achieves 1.25 kΩ of total resistance.

79. Utilizing only 12 kΩ resistors, create a series-parallel combination that achieves 9 kΩ of total resistance.

80. Consider the circuit of Figure 5.6.22 . Alter the values of the two right-most 30 kΩ resistors such that V_e is 1.2 volts. The remaining node voltages should be unchanged from the original circuit.

81. Alter the circuit shown in Figure 5.6.22 such that another “wrung” is added to the ladder creating a new right-most node f. If the former terminating 30 kΩ resistor (i.e., the vertical one) is reset to 60 kΩ, determine the values of the resistors on the new wrung such that V_f is 0.5 volts.

82. Given the circuit of Figure 5.6.25 , determine a new value for the 2 k Ω resistor such that V_b is 12 volts.

83. Given the circuit of Figure 5.6.32 , determine new values for the resistors such that all of the node voltages are twice the value of the original circuit's node voltages.

Simulation

84. Perform a DC simulation on the result of problem 24 to verify the node voltages.

85. Perform a DC simulation on the result of problem 25 to verify the node voltages.

86. Perform a DC simulation on the result of problem 43 to verify the node voltages.

87. Perform a DC simulation on the result of problem 46 to verify the node voltages.

88. Perform a DC simulation on the result of problem 51 to verify the node voltages.

89. Perform a DC simulation on the result of problem 68 to verify the node voltages.

90. Perform a DC simulation on the proposed solution to problem 69 to verify the new design.

91. Perform a DC simulation of the alteration presented in Challenge problem 80. Does the new design meet all of the requirements?

92. Perform a DC simulation of the alteration requested in Challenge problem 83. Does the new design meet all of the requirements?

This page titled 5.6: Exercises is shared under a CC BY-NC-SA 4.0 license and was authored, remixed, and/or curated by James M. Fiore via source content that was edited to the style and standards of the LibreTexts platform.

6: ANALYSIS THEOREMS AND TECHNIQUES

Learning Objectives

After completing this chapter, you should be able to:

- Define whether or not a circuit is a linear bilateral network.
- Find the voltage source equivalent of a current source and vice versa.
- Compute voltages and currents in multi-source networks using superposition.
- Simplify networks using Thévenin's and Norton's theorems.
- Determine conditions for maximum power transfer and compute the maximum power.
- Utilize delta-Y and Y-delta conversions for circuit simplification and analysis.

6.1: Introduction

6.2: Source Conversions

6.3: Superposition Theorem

6.4: Thévenin's Theorem

6.5: Norton's Theorem

6.6: Maximum Power Transfer Theorem

6.7: Delta-Y Conversions

6.8: Summary

6.9: Exercises

This page titled 6: Analysis Theorems and Techniques is shared under a CC BY-NC-SA 4.0 license and was authored, remixed, and/or curated by James M. Fiore via source content that was edited to the style and standards of the LibreTexts platform.

6.1: Introduction

As presented in the previous chapter, series-parallel analysis broadened our ability to analyze circuits beyond simple series and parallel networks, and leveraged the laws and techniques learned in earlier chapters. In this chapter we shall examine a number of theorems and techniques to help us analyze yet more complex circuits and address specialized applications. Specifically, we will address a method of analyzing circuits that contain multiple current and/or voltage sources that are connected in a non-trivial fashion (i.e., not just series voltage sources or parallel current sources). It is called the superposition theorem and can be applied to any circuit or parameter that meets certain requirements, including circuits that have both current sources and voltage sources together.

We shall also examine several ways of simplifying circuits or making functional equivalents for them. These are more tools to aid in the process of circuit simplification and analysis. The first item in this category is to make more accurate models of our idealized constant voltage and current sources. Once this is completed, it will be possible to convert from one type of source to another, such as creating a current source that is the functional equivalent of a voltage source. By this we mean that if we swap one for the other in any circuit, the remainder of the circuit will behave identically, producing the same component voltage drops and branch currents. This technique is useful in a number of ways, not the least of which is that it can help reduce more complex circuits to ease analysis.

The concept of equivalence can be extended beyond just a single source to an entire network. For this we will explore Thévenin's and Norton's theorems. Using these theorems, entire circuits utilizing dozens of components can be modeled as a single source with an associated resistance. When coupled with the maximum power transfer theorem, these theorems will allow us to determine component values that produce the maximum amount of load power.

Finally, we will examine how to find equivalent circuits for certain resistor arrangements that use three connecting points, in other words, resistor arrangements shaped like the letter Y or like a triangle. These are known as delta and Y configurations. These configurations are difficult to address with basic seriesparallel simplification techniques but the conversion equivalences will help solve that issue.

This page titled 6.1: Introduction is shared under a CC BY-NC-SA 4.0 license and was authored, remixed, and/or curated by James M. Fiore via source content that was edited to the style and standards of the LibreTexts platform.

6.2: Source Conversions

We begin by considering a more realistic model for constant voltage and constant current sources. The ideal voltage source produces a stated potential forever, and without regard to what it is connected to. The ideal current source behaves similarly; it will always produce the same current regardless of its load. These expectations are not realistic. For example, if we were to place a solid bar of copper across the terminals of a voltage source, the bar may exhibit a resistance of mere milliohms, implying an output current of thousands of amps. Similarly, if we were to disconnect a current source from any load, its effective load would be the resistance of the air between its terminals and Ohm's law would dictate an output voltage of perhaps thousands or even millions of volts. Real world sources do not behave like this.

Realistic Models for Sources

A highly precise model for any voltage source or current source could be fairly complex but for general purpose work, we can greatly improve our ideal sources by simply adding a resistor to them. This resistance is referred to as the internal resistance of the source. It is important to understand that this is not a resistor, as in an internal component that can be altered, but rather a mathematical addition to the source that better predicts how it will behave. Further, the value of this effective resistance can be deduced in a laboratory via proper measurements.

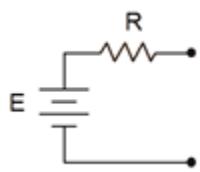

Figure 6.2.1 : Practical voltage source model.

The model for a voltage source adds a resistance in series, as shown in Figure 6.2.1 . This resistance sets an upper limit on the source's current output. Even if the output terminals are shorted, the maximum current will be dictated via Ohm's law to be the source voltage divided by the internal resistance, or E/R. Obviously, this internal resistance will create some voltage divider effect with the attached load. To minimize this effect, the internal resistance should be as small as practicably possible. Thus,

$$\text{The ideal internal resistance of a voltage source is zero ohms (a short).}$$

Given a zero ohm internal resistance, this improved model reverts back to the original ideal source. In the case of a lab power supply, the internal resistance typically will be a small fraction of an ohm.

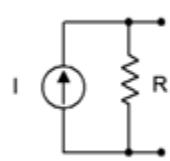

Figure 6.2.2 : Practical current source model.

For a current source, the improved model adds a resistance in parallel, as shown in Figure 6.2.2 . This resistance sets an upper limit on the source's voltage output. If the output terminals are opened, the maximum voltage will no longer produce a huge voltage. Instead, it is dictated by Ohm's law to be the source current times the internal resistance, or $I \cdot R$. This internal resistance will create some current divider effect with the attached load. To minimize this effect, the internal resistance should be as large as practicably possible. Thus,

$$\text{The ideal internal resistance of a current source is infinite ohms.}$$

Given an infinite ohm internal resistance (i.e., an open), this improved model reverts back to the original ideal source. From here

on, whenever we deal with practical voltage and current sources, we understand that these sources have some associated internal resistance, even if they're not shown explicitly in a schematic diagram. Further, whenever we talk about ideal sources, we simply use a short for the internal resistance of a voltage source and an open for the internal resistance of a current source.

Source Equivalences

For any simple voltage source consisting of an ideal voltage source with a series internal resistance, an equivalent current source may be created. Similarly, for any simple current source consisting of an ideal current source with a parallel internal resistance, an equivalent voltage source may be created. By “equivalent”, we mean the load currents must be identical for both circuits given any value of load resistance. (Note that if the currents are the same then the voltages must also be the same due to Ohm’s Law.) Consider the simple voltage source of Figure 6.2.1 . Its equivalent current source would be that shown in Figure 6.2.2 . The opposite is also true.

For reasons that will become apparent under the section on Thévenin's theorem following, the internal resistances of these two circuits must be identical if they are to behave identically. Knowing that, it is a straightforward process to find the required value of the other source. As the current/voltage characteristic is linear for these circuits, a plot line can be defined by just two points. The two obvious points to use are the opened and shorted load cases. In other words, if it's equivalent for these two situations, it must work for any load. The shorted load case produces the maximum load current with zero load voltage, while in contrast, the opened load case produces the maximum load voltage with zero load current.

Given a voltage source, the maximum current is developed when the load is shorted producing a current of E/R. Under that same load condition, all of the current from the current source version must be flowing through the load. Therefore, the value of the equivalent current source must be the maximum current of E/R. It would be nonsensical to use a current source that was larger or smaller than this value.

To continue, if we look at the open load case, for the voltage source the load current would be zero and the load voltage would be the entire source voltage of E. For the current source, the load would also see no current and its voltage would be the voltage appearing across its internal resistance which is R times the current E/R, or just E. Thus, the two behave identically at the load limits.

Similarly, if we start with a current source, an open load produces the maximum load voltage of $I \cdot R$. Therefore, the equivalent voltage source must have a value of $I \cdot R$. For the current source, a shorted load would produce a load current equal to the source value, or I. The voltage source version would produce a current of E/R, where the value of E was just found to be equal to $I \cdot R$, and thus the load current would be $I \cdot R/R$, or just I. Once again, the two versions behave identically at the load limits.

To summarize the process of source conversion:

- The internal resistance will be the same for both versions.
- If converting from a voltage source to a current source, the value of the current source will be the maximum current available from the voltage source (shorted load case), and is equal to E/R.
- If converting from a current source to a voltage source, the value of the voltage source will be the maximum voltage available from the current source (opened load case), and is equal to $I \cdot R$.

If a multi-source is being converted (i.e., voltage sources in series or current sources in parallel), first combine the sources to arrive at the simplest source and then do the conversion. Do not convert the sources first and then combine them as you will wind up with series-parallel configurations rather than simple sources.

Judicious use of source conversions can sometimes simplify multi-source circuits by allowing converted sources to be combined, resulting in a single source.

Example 6.2.1

Determine the current source equivalent for the source of Figure 6.2.3 .

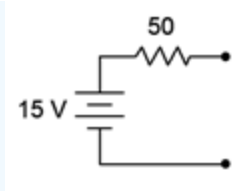

Figure 6.2.3 : Source for Example 6.2.1 .

First off, the resistance value is simply copied over, therefore the internal resistance of the current source is 50 Ω. The value of the current source is computed using Ohm's law based on the maximum current produced under the shorted load case. Thus, all 15 volts drops across the 50 Ω resistance.

$$I_s = \frac{E}{R_s}$$

$$I_s = \frac{15V}{50\Omega}$$

$$I_s = 0.3A$$

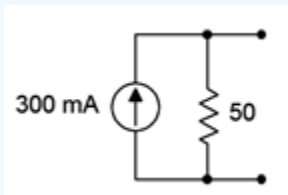

Figure 6.2.4 : Equivalent current source for the source of Figure 6.2.3 .

The equivalent current source is shown in Figure 6.2.4 . We know that this will work for the shorted an opened cases, but if any doubt is left as to its universal nature, simply substitute any other resistance value and compare the outcomes of the two circuits. For no particular reason, let's try using a load of 200 Ω and see if the load currents are identical.

For the original voltage source we can use Ohm's law:

$$I_L = \frac{E}{R_s + R_L}$$

$$I_L = \frac{15V}{50\Omega + 200\Omega}$$

$$I_L = 60mA$$

For the equivalent current source we can use CDR:

$$I_L = I_s \frac{R_s}{R_s + R_L}$$

$$I_L = 0.3A \frac{50\Omega}{50\Omega + 200\Omega}$$

$$I_L = 60mA$$

Try this with any other load resistor. The results should always be identical.

Now let's try one going the other way.

Example 6.2.2

Determine the voltage source equivalent for the source of Figure 6.2.5 .

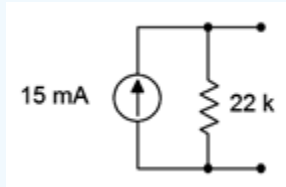

Figure 6.2.5 : Source for Example 6.2.2 .

Once again, the resistance value is simply copied over, therefore the internal resistance of the voltage source is 22 kΩ. The value of the voltage source is based on the maximum voltage produced under the opened load case and is computed using Ohm's law. For the open case, all 15 milliamps flows through the 22 kΩ resistance.

$$E_s = I \times Rs$$

$$E_s = 15mA \times 22k\Omega$$

$$E_s = 330V$$

The equivalent voltage source is shown in Figure 6.2.6 . Again, let's try using another value of load resistor to see if the load current and voltage results are identical between the two sources. This time, we'll match the load to the internal resistance of 22 kΩ.

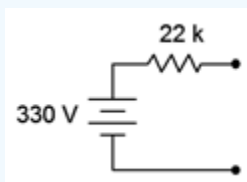

Figure 6.2.6 : Equivalent current source for the source of Figure 6.2.5 .

For a voltage source with matched resistances we wind up with a simple 50% voltage divider, thus the load voltage will be half the source voltage, or 165 volts. The original current source sees the current split in half due to the current divider rule. Thus, the load current should be 7.5 mA. Given this current, the load voltage will be,

$$V_L = I \times Rs$$

$$V_L = 7.5mA \times 22k\Omega$$

$$V_L = 165V$$

Once again the results turn out to be identical.

Now that we have it is possible to substitute one kind of source for another, it is time to investigate how we might put this to use beyond just giving us a different way of driving a circuit. If applied intelligently, source conversions can be used to simplify and reduce complex circuits, and thus ease computational difficulty. For example, consider the circuit of Figure 6.2.7 .

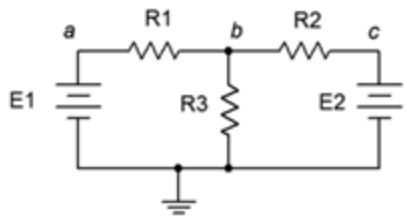

Figure 6.2.7 : A dual source circuit.

This circuit is unlike any circuit we have seen so far. Although we have analyzed circuits using multiple voltage sources, they have always been in a simple series loop. As such, their voltages may be added together to find a single equivalent voltage source. Such is not the case here. In this circuit the voltage sources are part of a series-parallel network and thus their potentials cannot be merely added. In fact, there are no further simplifications to be performed on this circuit using basic series-parallel techniques. We appear to be stuck.

But we're not. This circuit can be simplified into a straight all-parallel network through the use of source conversions. The E_1, R_1 combo can be converted into one current source while the E_2, R_2 combo can be converted into a second source. Once these are converted, the resulting circuit will consist of two current sources and three resistors, all in parallel. This is the sort of circuit we solved back in Chapter 4.

Example 6.2.3

Determine V_b for the circuit of Figure 6.2.8 .

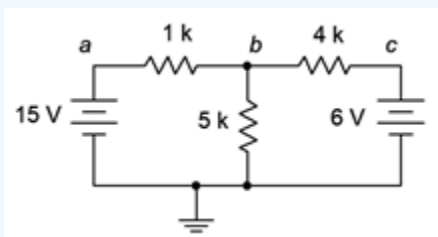

Figure 6.2.8 : Circuit for Example 6.2.3 .

The first step will be to convert the voltage sources into current sources. We will treat the resistors attached to their positive terminals as their internal resistances. In other words, we have a 15 volt source with 1 kΩ resistance and a 6 volt source with a 4 kΩ resistance.

For the first source, the current will be:

$$I_s = \frac{E}{R_s}$$

$$I_s = \frac{15V}{1k\Omega}$$

$$I_s = 15mA$$

And for the second source:

$$I_s = \frac{E}{R_s}$$

$$I_s = \frac{6V}{4k\Omega}$$

$$I_s = 1.5mA$$

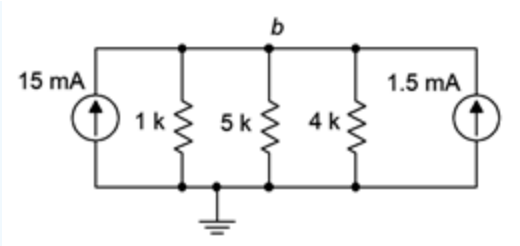

Figure 6.2.9 : Equivalent current source version of the circuit depicted in Figure 6.2.8 .

The equivalent converted circuit is shown in Figure 6.2.9 . Before continuing, it is worth noting that connection nodes a and c no longer exist in this circuit. More on this in a moment. This new circuit consists of a pair of current sources that sum to 16.5 mA and which drive three parallel resistors, 1 kΩ || 4 kΩ || 5 kΩ, or approximately 689.7 Ω. Ohm's law tells us V_b is:

$$V_b = I_{Total} \times R_{Equivalent}$$

$$V_b \approx 16.5mA \times 689.7\Omega$$

$$V_b = 11.38V$$

We can now take this voltage and apply it back into the original (unconverted) circuit. With this potential known, it is relatively easy to determine the other currents and voltages using KVL and Ohm's law. Looking at the 1 kΩ resistor, the voltage across it must be 15 V – 11.38 V, or 3.62 V. Therefore, the current through it must be 3.62 mA. Similarly, the voltage across the 4 kΩ resistor must be 11.38 V – 6 V, or 5.38 V, which yields a current of 1.345 mA. Both of these currents are flowing left to right. Then third current, flowing down through the 5 kΩ, is 11.38 V/5 kΩ, or 2.276 mA. KCL states that the current entering node b must equal the currents leaving. The entering current is 3.62 mA. The exiting currents are 1.345 mA and 2.276 mA, or 3.62 mA when rounded to three places (like the entering current).

As mentioned, nodes a and c disappeared in the converted circuit in Example 6.2.3 . This brings up an important point. Equivalent circuits are equivalent in terms that the items connected to the equivalent behave the same way as they do with the original circuit. That does not mean that the items within the equivalent see the same current or voltage. We do not expect the voltage across the 1 kΩ or 4 kΩ resistors in the converted version to be the same as those in the original version.

This page titled 6.2: Source Conversions is shared under a CC BY-NC-SA 4.0 license and was authored, remixed, and/or curated by James M. Fiore via source content that was edited to the style and standards of the LibreTexts platform.

6.3: Superposition Theorem

As useful as the source conversion technique proved to be in Example 6.2.3, it will not work for all circuits. Thus, more general approaches are needed. One of these methods is superposition.

Superposition allows the analysis of multi-source series-parallel circuits. Superposition can only be applied to networks that are linear and bilateral. Further, it cannot be used to find values for non-linear functions, such as power, directly. Fortunately, if the circuit contains nothing but resistors, and ordinary voltage sources and current sources, the circuit will be a linear bilateral network. Also, although power is a square law function (i.e., it is proportional to the square of voltage or current), it can be computed from the resulting voltage or current values so this presents no limits to analysis.

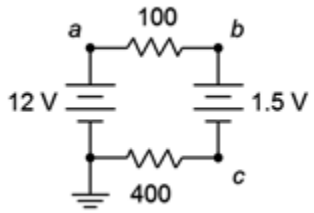

Figure 6.3.1 : A dual source circuit.

The basic idea is to determine the contribution of each source by itself, and then adding the results to get the final answer(s). Let's start with an almost trivial example to illustrate the idea. Consider the circuit of Figure 6.3.1 . Here we have two voltage sources driving a pair of resistors. It is a basic series circuit. The way this was approached in Chapter 3 was to combine the sources and the resistors into a single source and resistor. The circulating current could then be found using Ohm's law. As the two sources are in opposition, the net voltage is 10.5 volts while the total resistance is 500 Ω. This yields a circulating current of 21 mA.

Instead of this approach, let's consider the contribution of each source by itself. To do that, we will replace all other sources in the circuit with their ideal internal resistance. From earlier work we have discovered that the ideal internal resistance of a voltage source is a short, or zero ohms. Thus, we wind up with two circuits: one with a 12 volt source that drives 100 Ω, 400 Ω and a short; and a second circuit with a 1.5 volt source that drives pretty much the same thing, but with an opposing current direction. The first circuit produces a clockwise current of 12 V/ 500 Ω, or 24 milliamps. Meanwhile, the second circuit produces a counterclockwise current of 1.5 V / 500 Ω, or 3 mA. As these two currents oppose each other, the resulting current is 24 mA – 3 mA, or 21 mA, the same value originally computed. Granted, this second method is less efficient than the original method but it illustrates the process. More importantly, this process can be applied to a variety of multi-source series-parallel circuits. A key element is to remember the directions of the currents and polarities of the voltages created in the sub-circuits. Without these data, it will be impossible to determine whether the various pieces of the puzzle are added to or subtracted from the total.

To summarize the superposition technique:

- For every voltage or current source in the original circuit, create a new subcircuit. The sub-circuits will be identical to the original except that all sources other than the one under consideration will be replaced by their ideal internal resistance. This means that all remaining voltage sources will be shorted and all remaining current sources will be opened.
- Label the current directions and voltage polarities on each of the new subcircuits, as generated by the source under consideration.
- Solve each of the sub-circuits for the desired voltages and/or currents using standard series-parallel analysis techniques. Make sure to note the voltage polarities and current directions for these items.
- Add all of the contributions from each of the sub-circuits to arrive at the final values, being sure to account for current directions and voltage polarities in the process.

In order to get a better handle on the superposition technique, let's reexamine the the dual source circuit shown in Figure 6.2.8 (repeated in Figure 6.3.2 for ease of reference). We will solve this using superposition. As the circuit has two sources, it will require two sub-circuits.

Example 6.3.1

Determine V_b for the circuit of Figure 6.3.2 using superposition.

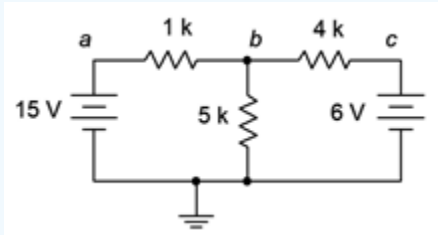

Figure 6.3.2 : Circuit for Example 6.3.1 .

As this circuit has two voltage sources, two sub-circuits will be needed. The first sub-circuit will use the 15 volt source. Consequently, the 6 volt source will be replaced with its ideal internal resistance, a short. This new circuit is shown in Figure 6.3.3 .

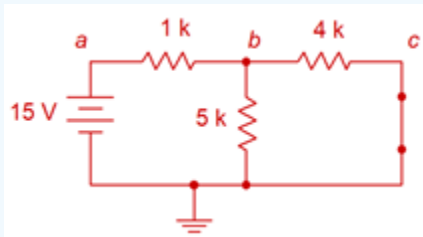

Figure 6.3.3 : First sub-circuit for the circuit of Figure 6.3.2 .

The current directions are as follows: current exits the source and travels through the 1 kΩ producing a voltage drop + to − from left to right. At node b the current splits. The 4 kΩ and 5 kΩ are in parallel so they both see the same voltage. Some of the current flows down through the 5 kΩ resistor producing a voltage drop + to − from top to bottom. The remainder of the current flows to the right, through the 4 kΩ, producing a voltage drop + to − from left to right. V_b can be determined via voltage divider between the 1 kΩ and the parallel combo of the 5 kΩ and 4 kΩ. 5 kΩ in parallel with 4 kΩ is approximately 2.222 kΩ.

$$V_b = E\frac{R_x}{R_x + R_y}$$

$$V_b = 15V\frac{2.222k\Omega}{2.222k\Omega + 1k\Omega}$$

$$V_b \approx 10.34V$$

The second sub-circuit will use the 6 volt source. Therefore, the 15 volt source will be replaced with its ideal internal resistance, a short. This new circuit is shown in Figure 6.3.4 .

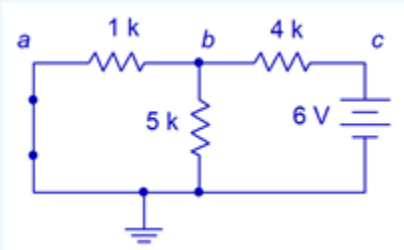

Figure 6.3.4 : Second sub-circuit for the circuit of Figure 6.3.2 .

The current directions are as follows: current exits the source and travels through the 4 kΩ producing a voltage drop + to – from right to left. At node b the current splits. Now the 1 kΩ and 5 kΩ are in parallel so they both see the same voltage. Some of the current flows down through the 5 kΩ resistor producing a voltage drop + to – from top to bottom, just as it did in the first sub-circuit. The remainder of the current flows to the left, through the 1 kΩ, producing a voltage drop + to – from right to left. Once again, V_b can be determined via voltage divider, this time between the 4 kΩ and the parallel combo of the 5 kΩ and 1 kΩ is approximately 833.3 Ω.

$$V_b = E\frac{R_x}{R_x + R_y}$$

$$V_b = 6V\frac{833.3\Omega}{833.3\Omega + 4k\Omega}$$

$$V_b \approx 1.034V$$

Both sub-circuits show polarities of + to – from top to bottom for V_b, therefore these two voltages simply add, for a total of approximately 11.37 volts. This agrees nicely with the result obtained using source conversions. The slight deviation in the final digit is no doubt due to the rounding of intermediate values, such as resistor combinations.

It is instructive to pursue this example further and investigate a current. In the source conversion version it was discovered that the current through the 1 kΩ resistor is 3.62 mA and flowing left to right. Using superposition, the corresponding current in the first sub-circuit can be found using KVL and Ohm's law, (15 V – 10.34 V)/ 1 kΩ, or 4.66 mA flowing left to right. In the second sub-circuit, this current can be obtained using Ohm's law alone, 1.034 V / 1 kΩ, or 1.034 mA flowing right to left. As this current opposes the current from the first sub-circuit, the two values are subtracting leaving approximately 3.63 mA flowing left to right, agreeing with the original answer within rounding error.

Computer Simulation

For further verification, the circuit of Example 6.3.1 is entered into a simulator as shown in Figure 6.3.5 .

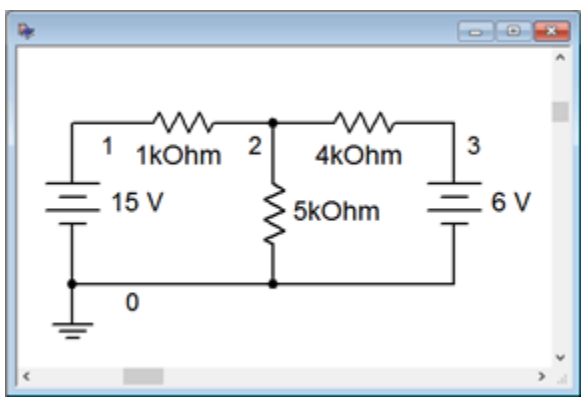

Figure 6.3.5 : The circuit of Example 6.3.1 in a simulator.

A DC operating point analysis is performed, as shown in Figure 6.3.6 .

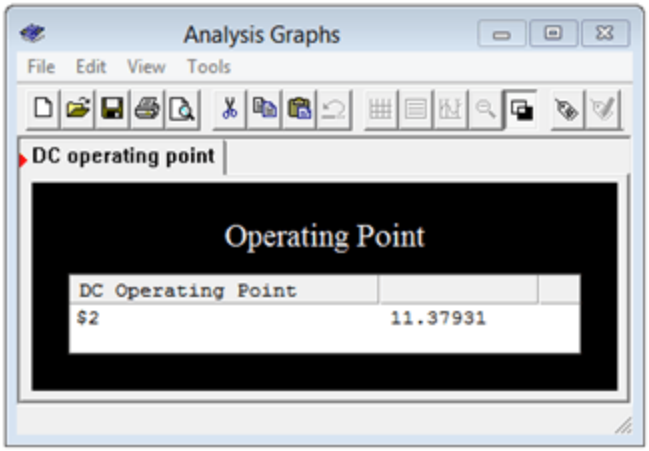

Figure 6.3.6 : Simulation results for the circuit of Example 6.3.1 .

The voltage at node 2, which is V_b in the original circuit, agrees nicely with the values computed previously.

This exploration shows that the superposition technique offers a fairly straightforward method of solving a variety of multi-source series-parallel circuits. It is not without its limitations, though. First, if a circuit has a large number of sources, superposition can become a bit tedious as it requires as many sub-circuits as there are sources, and every one of these sub-circuits requires separate solutions. Second, there are some series-parallel configurations that superposition along with seriesparallel analysis techniques will not solve. We will investigate methods of dealing with these issues later in this chapter and in the following chapter.

This page titled 6.3: Superposition Theorem is shared under a CC BY-NC-SA 4.0 license and was authored, remixed, and/or curated by James M. Fiore via source content that was edited to the style and standards of the LibreTexts platform.

6.4: Thévenin's Theorem

Thévenin's theorem, named after Léon Charles Thévenin, is a powerful analysis tool. For DC, it states:

$$\text{Any single port linear network can be reduced to a simple voltage source, } E_{th}, \text{in series with an internal resistance, } R_{th}.$$

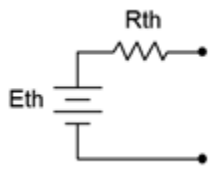

Figure 6.4.1 : Thévenin equivalent circuit.

An example is shown in Figure 6.4.1 . The phrase “single port network” means that the circuit is cut in such a way that only two connections exist to the remainder of the circuit (two connection points makes up one port). The remainder of the circuit may be a single component or a large multi-component sub-circuit. As there are many ways to cut a typical circuit, there are many possible Thévenin equivalents. The important thing is that there are only two connection points between the two portions of the circuit and neither point has to be ground.

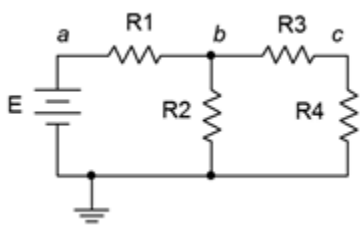

Figure 6.4.2 : Example circuit.

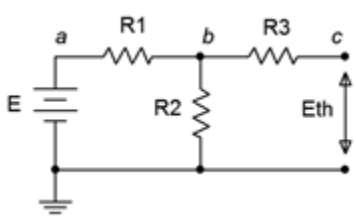

Figure 6.4.3 : Finding E_{th}..

Consider the circuit shown in Figure 6.4.2 . Suppose we cut the circuit immediately to the left of R_4. That is, we will find the Thévenin equivalent that drives R_4. The first step is to make the cut, removing the remainder of the circuit (in this case, just R_4). We then determine the open circuit output voltage. This is the maximum voltage that could appear between the cut points and is called the Thévenin voltage, E_{th}. This is shown in Figure 6.4.3 . In a circuit such as this, basic series-parallel analysis may be used to find E_{th}. This process turns out to be quite straightforward in this particular circuit. Due to the open, no current flows through R_3, thus no voltage is developed across R_3, and therefore E_{th} must equal the voltage developed across R_2 which may be obtained via a voltage divider with resistor R_1 and source E.

The second part is finding the Thévenin resistance, R_{th}. Beginning with the “cut” circuit, replace all sources with their ideal internal resistance (thus shorting voltage sources and opening current sources). From the perspective of the cut point, look back into the circuit and simplify by making appropriate series and parallel combinations to determine its equivalent resistance. This is shown in Figure 6.4.4 . Looking in from where the cut was made (right-to-left here), we find that R_1 and R_2 are in parallel, and this combination is then in series with R_3. Thus, $R_{th} = R_3 + (R_1||R_2)$. A common error is to determine the equivalent resistance

that the source drives. Remember, everything is determined from the vantage point of the cut or port.

Thévenin equivalents are not limited to single source circuits. It is possible to find the equivalent of a network with several sources. Finding the open circuit output voltage will undoubtedly require some extra work, for example the use of superposition of source conversions. Finding the Thévenin resistance is unchanged, just remember to replace every source with its ideal internal resistance before simplifying the network.

As noted earlier, the original circuit could be cut in a number of different ways. We might, for example, want to determine the Thévenin equivalent that drives R_2 in the circuit of Figure 6.4.2 . This cut appears in Figure 6.4.5 . Clearly, this will result in different values for both E_{th} and R_{th}. For example, R_{th} is now $R_1||(R_3+R_4)$.

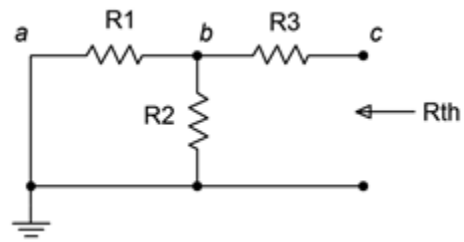

Figure 6.4.4 : Finding R_{th}.

Finding Thévenin Equivalents in Lab

The procedure for experimentally determining an equivalent in the laboratory mimics the analytical approach. The first step is to figuratively cut the circuit and isolate the section that is to be converted. At this point we have the open circuit version of the circuit and all we need do is connect a multimeter to the open port to determine E_{th}.

There are two methods for determining R_{th}. The first method works well for simple circuits that use only resistors and current and/or voltage sources. The second method is more generally applicable and will work for circuits with active devices such as transistors. To use the first method, the sources are physically removed from the circuit and replaced with their ideal internal resistance. Thus voltage sources are replaced with a shorting wire and current sources are left as opens. Do not simply place shorting wires across the terminals of voltage sources as doing so will cause an overload and potentially damage the sources. Once this is completed, a multimeter is placed at the open port and set to read resistance. The indicated value is R_{th}.

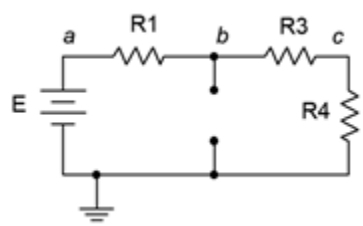

Figure 6.4.5 : An alternate cut or port location.

The second method uses a variable resistance, namely either a rheostat or a decade box, and exploits the voltage divider rule. In this version, the sources are left active (powered up) and are not replaced with opens or shorts. Once E_{th} is measured, the variable resistor is placed across the port connections. This resistance is adjusted until the port voltage drops to exactly half of E_{th}. In the equivalent circuit, there are only two resistances of concern, R_{th} and this variable load resistance, and they are in series. Consequently, if the load voltage is now half of the open circuit voltage (E_{th}), then the other half of the voltage must be dropping across the equivalent internal resistance (R_{th}). For this to be true in a series circuit, the two resistances must have the same value. Thus, we simply remove the rheostat from the circuit and use a multimeter to determine its precise value. If a decade box is used instead, the value is determined directly by reading the knob settings.

Whether determined analytically or empirically, the Thévenin equivalent circuit can replace the original single port network regardless of what the original was connected to. The same voltages and currents will be seen in this other portion, and it won't matter if the other portion is comprised of a single resistor, multiple resistors, multiple resistors and multiple sources, or even

multiple resistors and sources wired to a selection of piquant cheeses. The Thévenin equivalent is a true functional equivalent and can be used on any linear bilateral network.

Example 6.4.1

Determine the Thévenin equivalent of the circuit driving the 1 kΩ in Figure 6.4.6 . Verify that the equivalent produces the same voltage across this resistor as the original circuit.

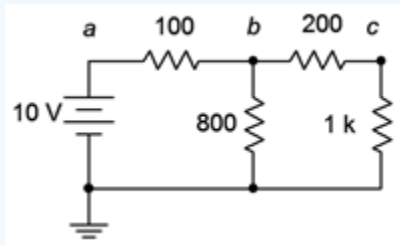

Figure 6.4.6 : Circuit for Example 6.4.1 .

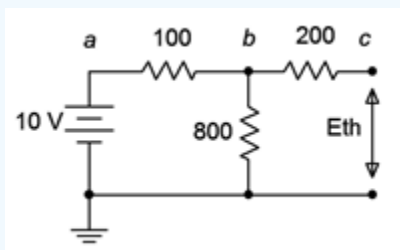

Figure 6.4.7 : Finding E_{th}.

First, we'll redraw the circuit showing the portion to be Théveninized, as shown in Figure 6.4.7 . The open circuit output voltage will be the voltage across the 800 Ω resistor as there will be no voltage drop across the 200 Ω resistor (as no current flows through it into the open). This is found via a simple voltage divider.

$$E_{th} = E\frac{R_x}{R_x + R_y}$$

$$E_{th} = 10V\frac{800\Omega}{800\Omega + 100\Omega}$$

$$E_{th} \approx 8.889V$$

The equivalent resistance is found by shorting the voltage source and then simplifying the circuit. The result is 200 Ω in series with the parallel combination of the 100 Ω and 800 Ω. $200 + 100||800 \approx 288.89\Omega$.

To determine Vc, we can use a voltage divider between the 1 kΩ and the 288.89 Ω along with the equivalent source voltage of 8.889 volts.

$$V_c = E_{th}\frac{R_L}{R_L + R_{th}}$$

$$V_c = 8.889V\frac{1k\Omega}{1k\Omega + 288.89\Omega}$$

$$V_c \approx 6.897V$$

Now let's determine V_c in the original circuit using series-parallel analysis techniques. Perhaps the quickest approach is a pair of voltage dividers. V_b is found via a divider between the parallel combination of the 1 kΩ + 200 Ω and the 800 Ω, against the 100 Ω. V_c is is then found using that voltage with a divider between the 1 kΩ and 200 Ω. Using this approach, V_b is approximately 8.276 volts and V_c is approximately 6.897 volts, providing an excellent match.

It might seem that the Thévenin method is the “long way home” in this example, and it is, but it has the advantage of being more efficient if several different loads are being considered. For example, suppose we decided to determine the output voltage not just for the 1 kΩ, but for a group of a half dozen different resistors. The double voltage divider would have to be determined for each load resistor using the straight series-parallel method but only a single divider needs to be computed for each load when using the Thévenin method. The Thévenin method is also of great use when determining maximum power transfer, as we shall see a later in this chapter.

Computer Simulation

To verify the results of Example 6.4.1 , the original circuit is recreated in a simulator along its Thévenin equivalent, as shown in Figure 6.4.8 .

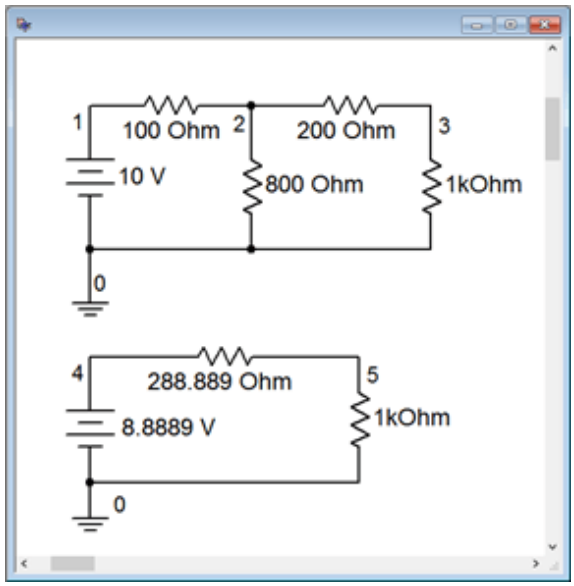

Figure 6.4.8 : The original circuit of Example 6.4.1 in a simulator along with the equivalent.

A DC operating point analysis is performed and the results are shown in Figure 6.4.9 . Note that the voltages across the identical 1 kΩ loads (nodes 3 and 5) are virtually the same, indicating functional equivalence between the two. The slight deviation is due to the rounding of the Thévenin voltage and resistance.

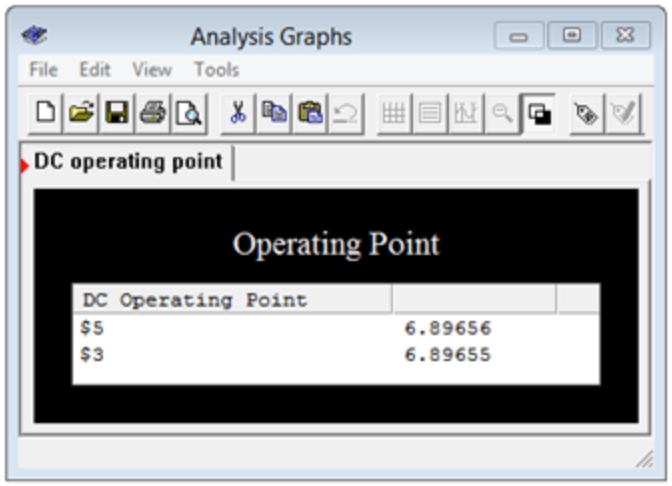

Figure 6.4.9 : Results of the simulation showing equivalence.

As a further check, the simulation is run again, but this time using an alternate load resistor value. The value chosen is the Thévenin resistance value. By matching the resistances, this should produce a 50/50 voltage divider and the load voltage should equal half of the Thévenin source voltage, or approximately 4.444 volts. That is precisely what we find, as seen in Figure 6.4.10 .

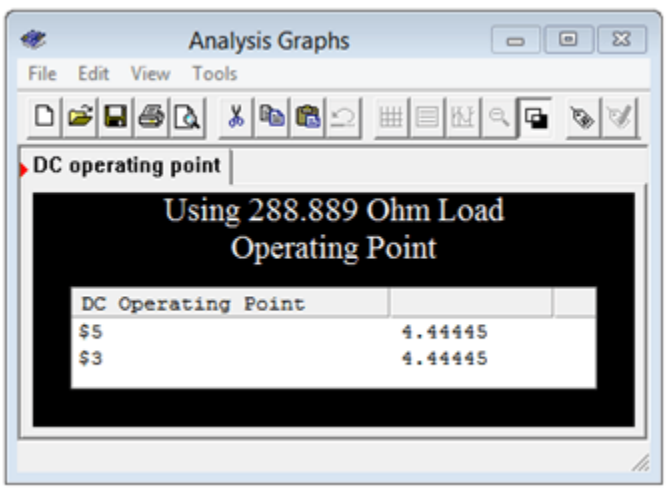

Figure 6.4.10 : Results of the simulation for matched resistance.

As mentioned previously, Thévenin's theorem can be applied to much more complex multi-source circuits, and the item being driven need not be just a single resistor. This is illustrated in the next example.

Example 6.4.2

Determine the Thévenin equivalent of the circuit driving the resistor/voltage source combo in Figure 6.4.11 . Verify that the equivalent produces the same voltage across this resistor as the original circuit.

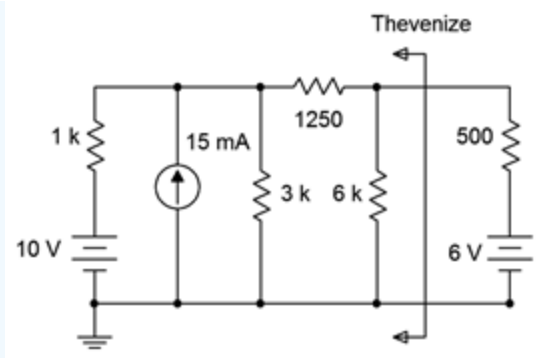

Figure 6.4.11 : Circuit for Example 6.4.2 .

Determining R_{th} is not particularly difficult here. After shorting the 10 volt source and open the current source, it can be seen that the 1 kΩ and 3 kΩ are in parallel, yielding 750 Ω. This is in series with the 1250 Ω for a total of 2 kΩ, which is in turn in parallel with the 6 kΩ. The final result is 1.5 kΩ.

Finding E_{th} is a little more involved. One possibility is to use a source conversion on the 10 volt source as that will leave us with two parallel current sources that may be combined directly. The converted source will be 10 V/ 1kΩ, or 10 mA, in parallel with 1 kΩ. This results in a total of 25 mA feeding upwards with 1 kΩ || 3 kΩ, or 750 Ω. We can use the current divider rule to determine the current flowing through the 1250 Ω plus 6 kΩ branch, and then use Ohm's law to find the open circuit voltage (i.e., the voltage across the 6 kΩ).

$$I_{6k} = I_S \frac{R_x}{R_x + R_y}$$

$$I_{6k} = 25mA \frac{750\Omega}{750\Omega + 7250\Omega}$$

$$I_{6k} = 2.34375mA$$

$$E_{th} = I_{6k} \times R_{6k}$$

$$E_{th} = 2.34375mA \times 6k\Omega$$

$$E_{th} = 14.0625V$$

Another approach to determine this value would be to use superposition. This is left as an additional exercise.

Turning our attention to the voltage produced across the 6 volt with 500 Ω sub-circuit, we have a simple series loop with E_{th} opposing this 6 volt source, leaving 8.0625 volts to produce a clockwise current through R_{th} in series with the 500 Ω (a total of 2 kΩ). That current will be 8.0625 V / 2 kΩ, or 4.03125 mA. This will produce a drop across the 500 Ω of 2.015625 volts with a polarity of + to − from top to bottom. This will add to the 6 volt source resulting in a final potential of 8.015625 volts. The results are verified via the simulation technique used previously. The node voltages for both the original and equivalent circuits are shown in Figure 6.4.12 .

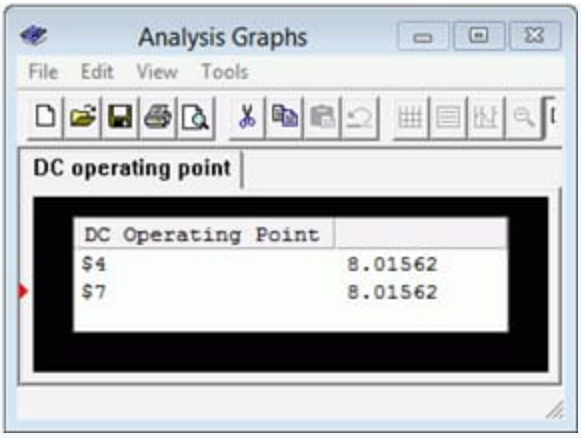

Figure 6.4.12 : Results of the simulation using the original and equivalent circuits.

This page titled 6.4: Thévenin's Theorem is shared under a CC BY-NC-SA 4.0 license and was authored, remixed, and/or curated by James M. Fiore via source content that was edited to the style and standards of the LibreTexts platform.

6.5: Norton's Theorem

Norton's theorem is credited to Edward Lawry Norton. In a nutshell, Norton's theorem is the current source version of Thévenin's theorem. That is, a single port DC network can be reduced to a single current source, I_N, with parallel internal resistance, R_N. Indeed, once you understand one of them, the other is but a minor extension, so we will not need to spend a great deal of time here once the basics are outlined sufficiently.

The process of determining the Norton equivalent current and resistance is very similar to that employed for the Thévenin equivalent. First, the Norton resistance is found the same way as is the Thévenin resistance: replace all sources with their ideal internal resistance and then perform appropriate series and parallel combinations to reduce this to a single resistance value. Consequently, the Norton and Thévenin resistance values are identical, $R_N = R_{th}$. Second, instead of finding the open circuit output voltage, we find the short circuit output current. This is the Norton current. Instead of thinking in terms of a voltmeter at the opened load, we think in terms of connecting a shorting ammeter across the load. Either way, we're looking for the maximum value that can be obtained.

Perhaps the most useful thing to remember here is that if we can create a Thévenin equivalent for a network then it must be possible to create a Norton equivalent. Indeed, once a Thévenin equivalent is found, a source conversion can be performed on it to yield the Norton equivalent! The opposite, of course, is also true.

This page titled 6.5: Norton's Theorem is shared under a CC BY-NC-SA 4.0 license and was authored, remixed, and/or curated by James M. Fiore via source content that was edited to the style and standards of the LibreTexts platform.

6.6: Maximum Power Transfer Theorem

Given a simple voltage source with internal resistance, a useful question to ask is “What value of load resistance will yield the maximum amount of power in the load?” While it is not true that maximizing load power is a goal of all circuit designs, it is a goal of a portion of them and thus worth a closer look. Consider the basic circuit depicted in Figure 6.6.1 with source E, source internal resistance R_i and load resistance R.

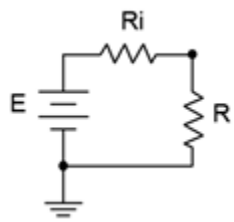

Figure 6.6.1 : Defining maximum power transfer.

We would like to describe the load power in terms of the load resistance. To make the job easier, we may normalize the voltage source E to 1 volt and the source resistance R_i to 1 Ohm. By doing this, R also becomes a normalized value, that is, it no longer represents a simple resistance value but rather represents a ratio in comparison to R_i. In this way the analysis will work for any set of source values. Note that the value of E will equally scale the power in both R_i and R, so a precise value is not needed, and thus, we may as well chose 1 volt for convenience.

The power in the load can be determined by using I^2R where $I = E/(R_i + R)$. Using our normalized values $I = 1/(1 + R)$ and thus the load power is:

$$P = \left(\frac{1}{1+R}\right)^2 R \text{ or after expanding, } P = \frac{R}{R^2+2R+1}$$

We now have an equation that describes the load power in terms of the load resistance. Before we go any further, take a look at what this equation tells you, in general. It is obvious that maximum power will not occur at the extremes. If $R = 0$ or $R = \infty$ (i.e., shorted or opened load) the load power is zero. While shorting the load will yield the maximum load current, it will also yield zero load voltage and thus no power. Similarly, opening the load will yield maximum load voltage but it will also yield zero load current, and again, no load power. To find the precise value that produces the maximum load power, the proof can be divided into two major portions. The first involves graphing the function and the second requires differential calculus to solve for a precise value. We shall proceed with the graphing portion which will lead us to the answer. The more rigorous proof of the second method is detailed in Appendix C.

Graphing the Power Function $P = R/(R^2 + 2R + 1)$

This may be done in parts, looking at the contribution of each term, and then combining to form the final result. First, consider the denominator $R^2 + 2R + 1$. It consists of three segments. The most simple is the horizontal line at +1. The $2R$ term creates a straight line with slope 2 starting at the origin. The R^2 term creates a simple curve with increasing slope that starts at the origin, crosses the horizontal +1 line at $R = 1$ and also crosses the $2R$ line at $R = 2$. These items are drawn individually and then added together as illustrated in Figure 6.6.2 .

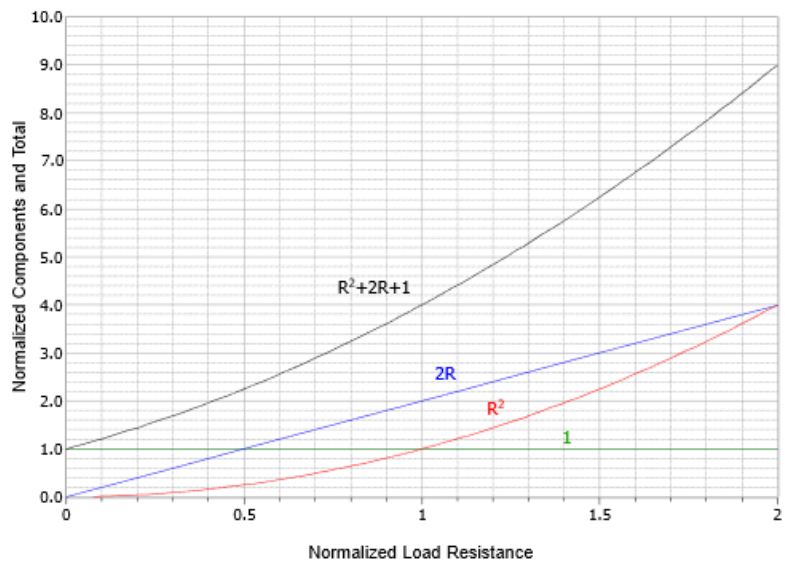

Figure 6.6.2 : The three terms of the power equation plotted individually and then summed.

Of course, we must remember that we really want $1/(R^2+2R+1)$ and so we plot the reciprocal of the combo as shown in Figure 6.6.3 (red curve). We also include the numerator term, R. This is shown as a straight line (blue) with a slope of 1. Finally, these two curves are multiplied together to produce the load power equation (black).

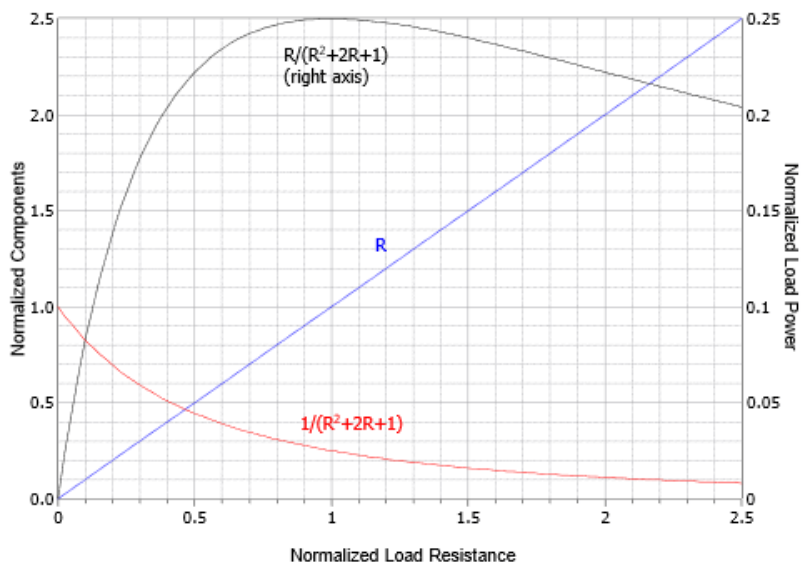

Figure 6.6.3 : The power equation and components plotted.

A close examination of the power curve will show that the peak occurs at $R=1$. This is easier to see if we plot the completed power curve using a logarithmic horizontal axis and also scale the vertical axis to 100%, as shown in Figure 6.6.4 . The peak is more apparent and the curve is symmetrical in shape rather than lopsided. This reinforces the idea that the ratio of the resistances is what matters.

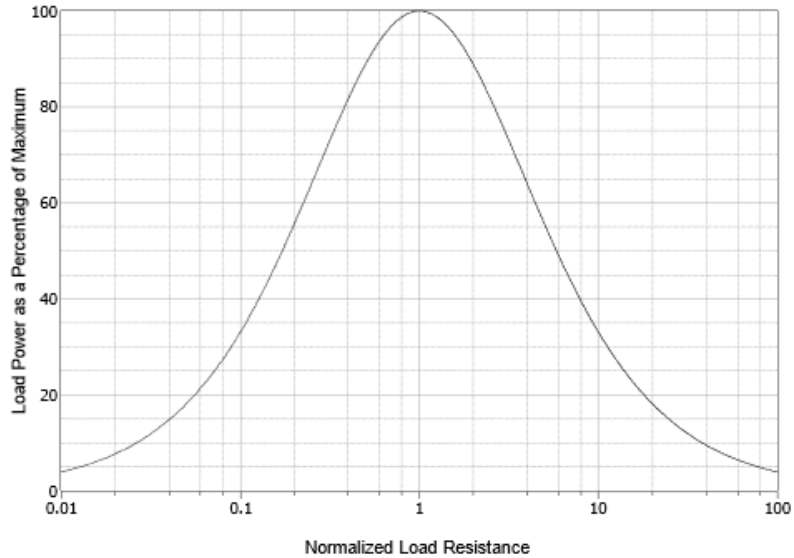

Figure 6.6.4 : The load power curve with logarithmic axis showing symmetry.

Finally, we can state:

$$\text{Maximum load power will be achieved when the load resistance is equal to the internal resistance of the driving source.}$$

No other value of load resistance will produce a higher load power. For the circuit of Figure 6.6.1 , this means that R must equal R_i. As an exercise, we can try substituting a few values around the peak to verify this. For example, given E = 1 V and R_i = 1 Ω, we calculate P for R = 0.5 Ω, 1 Ω, and 2 Ω:

$$P_{0.5} = 0.5/(0.5^2 + 2 \cdot 0.5 + 1) = 2/9$$

$$P_1 = 1/(1^2 + 2 \cdot 1 + 1) = 2/8 = 1/4$$

$$P_2 = 2/(2^2 + 2 \cdot 2 + 1) = 2/9$$

You can also try this with extremely small variations such as R = 0.9999 Ω along with R = 1.0001 Ω and you will not achieve a value equal to or greater than 1/4 Watt.

While matching the resistance produces the maximum load power, it does not produce maximum load current or maximum load voltage. In fact, this condition produces a load voltage and a load current that are half of their maximums. Their product, however, is at the maximum. Further, efficiency at maximum load power is only 50% (i.e., only half of all generated power goes to the load with the other half being wasted internally). Values of R greater than R_i will achieve higher efficiency but at reduced load power. Sometimes we favor efficiency over maximal load power.

As any linear two point network can be reduced to something like Figure 6.6.1 by using Thévenin's theorem, combining the two theorems allows us to determine maximum power conditions for any resistor in a complex circuit.

This page titled 6.6: Maximum Power Transfer Theorem is shared under a CC BY-NC-SA 4.0 license and was authored, remixed, and/or curated by James M. Fiore via source content that was edited to the style and standards of the LibreTexts platform.

6.7: Delta-Y Conversions

Certain component configurations, such as bridged networks, cannot be reduced to a single resistance using basic series-parallel conversion techniques. One method for simplification involves converting sections into more convenient forms. The configurations in question are three-point networks containing three resistors. Due to the manner in which they drawn, they are referred to as delta networks and Y networks[1]. These configurations are shown in Figures 6.7.1 . In this particular case the delta version is drawn upside down so that its terminal designations match those of the Y configuration.

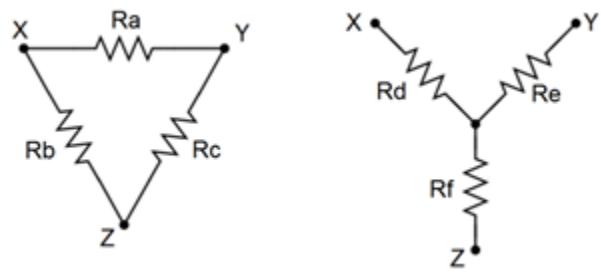

Figure 6.7.1 : Delta and Y (Δ-Y) networks.

Alternately, if they are slightly redrawn they are known as pi (also called "π") networks and T (also called "tee") networks. These configurations are shown in Figure 6.7.2 .

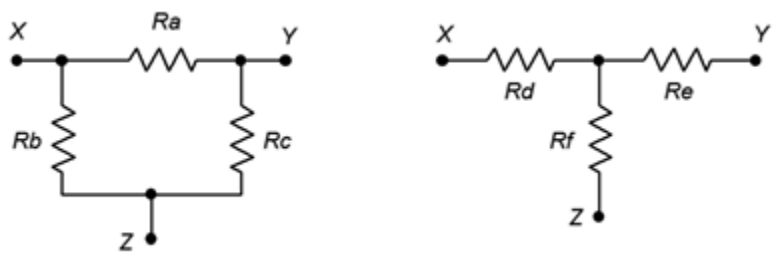

Figure 6.7.2 : Alternate form: Pi and T(π-T) networks.

It is possible to convert back and forth between delta and Y networks. That is, for every delta network, there exists a Y network such that the resistances seen between the X, Y and Z terminals are identical, and vice versa. Consequently, one configuration can replace another in order to simplify a larger circuit.

Δ-Y Conversion

A true equivalent circuit would present the same resistance between any two terminals as the original circuit. Consider the unloaded case for the circuits of Figure 6.7.1 (i.e., just these networks with nothing else connected to them). The equivalent resistances seen between each pair of terminals for the delta and Y respectively are:

$$R_{XY} = R_a||(R_b + R_c) = R_d + R_e \tag{6.7.1}$$

$$R_{XZ} = R_b||(R_a + R_c) = R_d + R_f \tag{6.7.2}$$

$$R_{ZY} = R_c||(R_b + R_a) = R_e + R_f \tag{6.7.3}$$

Assuming we have the delta and are looking for the Y equivalent, note that we have three equations with three unknowns (R_d, R_e and R_f). Thus, they can be solved using a term elimination process. If we subtract Equation 6.7.3 from Equation 6.7.1 we eliminate the second resistance (R_e) and arrive at a difference between the first and third unknown resistances ($R_d - R_f$). This quantity can then be added to Equation 6.7.2 to eliminate the third resistance (R_f), leaving just the first unknown resistance (R_d).

$$(R_d + R_e) - (R_e + R_f) = (R_d - R_f) = R_a||(R_b + R_c) - R_b||(R_a + R_c)$$

$$(R_d + R_f) + (R_d - R_f) = 2R_d = 2(R_b||(R_a + R_c) + R_a||(R_b + R_c) - R_c||(R_a + R_b))$$

Therefore,

$$R_d = R_b||(R_a + R_c) + R_a||(R_b + R_c) - R_c||(R_a + R_b)$$

which, after simplifying, is:

$$R_d = \frac{R_a R_b}{R_a + R_b + R_c} \tag{6.7.4}$$

Similarly, we can show that

$$R_e = \frac{R_a R_c}{R_a + R_b + R_c} \tag{6.7.5}$$

$$R_f = \frac{R_b R_c}{R_a + R_b + R_c} \tag{6.7.6}$$

Note that if three identical resistors are used, the values of the Y equivalent will all be one-third of that value.

Helpful Hint for Remembering Δ-Y Conversion Equations

Examine the equations for R_d, R_e, and R_f. You will note that they all have the same denominator. What kind of mnemonic (memory helper) can you come up with to help you remember the relationship between the resistor whose value you are trying to calculate and the resistors in the numerator on the right-hand side of the equation.

Suggestion

- The resistances in the numerator are the two resistors in the delta network that are connected to the same node as the resistor in the Wye network whose value you are trying to determine.
  - For example, if you are calculating R_d, you'll notice it is connected to node X. In the delta configuration, R_a and R_b are connected to node X, so the product of R_a and R_b is used in the calculation of R_d

Y-Δ Conversion

For the reverse process of converting Y to delta, start by noting the similarities of the expressions for R_d, R_e and R_f. If two of these expressions are divided, a single equation for R_a, R_b or R_c will result. For example, using Equations 6.7.4 and 6.7.5:

$$\frac{R_d}{R_e} = \frac{\frac{R_a R_b}{R_a + R_b + R_c}}{\frac{R_a R_c}{R_a + R_b + R_c}}$$

$$\frac{R_d}{R_e} = \frac{R_a R_b}{R_a R_c}$$

$$\frac{R_d}{R_e} = \frac{R_b}{R_c}$$

Therefore,

$$\frac{R_b}{R_c} = \frac{R_d}{R_e}$$

$$R_b = \frac{R_c R_d}{R_e}$$

This process can be repeated for Equations 6.7.4 and 6.7.6 to obtain an expression for R_a. The two expressions for R_a and R_b can then be substituted into Equation 6.7.4 to obtain an expression for R_c that utilizes only R_d, R_e and R_f. A similar process is

followed for R_a and R_b resulting in:

$$R_a = \frac{R_d R_e + R_e R_f + R_d R_f}{R_f} \tag{6.7.7}$$

$$R_b = \frac{R_d R_e + R_e R_f + R_d R_f}{R_e} \tag{6.7.8}$$

$$R_c = \frac{R_d R_e + R_e R_f + R_d R_f}{R_d} \tag{6.7.9}$$

If three identical resistors are used, the values of the delta equivalent will all be three times that value, the inverse of the situation when converting from delta to Y.

Helpful Hint for Remembering Y-Δ Conversion Equations

Examine the equations for R_a, R_b, and R_c. You will note that they all have the same numerator.

What kind of mnemonic can you come up with to help you remember the relationship between the resistor whose value you are trying to calculate and the resistor in the denominator on the right-hand side of the equation.

Suggestion

- The resistance in the denominator is the value of the resistor in the Wye network that is connected to the node opposite the resistor in the Delta network whose value you are trying to determine
  - For example, if you are calculating R_a, you'll notice that the node opposite is is Z and in the delta network, R_f is connected to Z, so R_f is used in the denominator for the calculation of R_a

Thus, equations 6.7.4, 6.7.5 and 6.7.6 can be used to convert a delta network into a Y network, and equations 6.7.7, 6.7.8 and 6.7.9 can be used to convert a Y network into a delta network. An example of how this will tame an otherwise incorrigible series-parallel network is next.

Example 6.7.1

Determine the equivalent of the bridge circuit shown in Figure 6.7.3 .

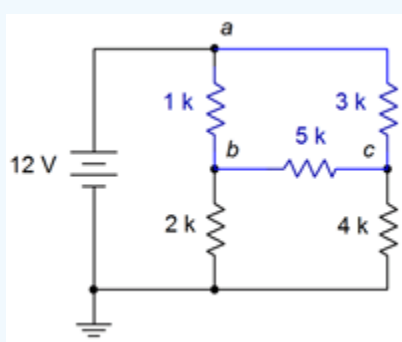

Figure 6.7.3 : Circuit for Example 6.7.1 .

This circuit uses a five resistor bridge which cannot be further simplified using basic series-parallel combinations. As a result, the techniques presented in Chapter 5 will not be sufficient to obtain a solution. A delta-Y conversion is proposed to simplify the circuit instead. We begin by defining a delta configuration using the top three resistors (shown in blue). When replaced with a Y configuration, we will have resistors in series with the 2 kΩ and 4 kΩ, and a third resistor in series with the source. This new network can solved using basic series-parallel techniques.

Note that a Y-delta is not as good of a choice. For example, using the 1 kΩ, 2 kΩ and the 5kΩ as a sideways Y, the delta version leaves resistors in parallel with the 3 kΩ and the 4 kΩ, and another in parallel with the source. This is straightforward to solve, but unfortunately, node b disappears in the process.

We shall use Equations 6.7.4, 6.7.5 and 6.7.6 to perform the delta-Y conversion. The orientation in Figure 6.7.3 is skewed compared to the reference of Figure 6.7.1 . To make them match, imagine rotating the networks of Figure 6.7.1 slightly clockwise so that point X is at the very top (matching node a), leaving Y and Z at the bottom (matching c and b, respectively). Given this new orientation, R_a is the 3 kΩ, R_b is the 1 kΩ and R_c is the 5 kΩ.

$$R_d = \frac{R_a R_b}{R_a + R_b + R_c}$$

$$R_d = \frac{3k\Omega 1k\Omega}{3k\Omega + 1k\Omega + 5k\Omega}$$

$$R_d \approx 333.333\Omega$$

$$R_e = \frac{R_a R_c}{R_a + R_b + R_c}$$

$$R_e = \frac{3k\Omega 5k\Omega}{3k\Omega + 1k\Omega + 5k\Omega}$$

$$R_e \approx 1.666667k\Omega$$

$$R_f = \frac{R_b R_c}{R_a + R_b + R_c}$$

$$R_f = \frac{1k\Omega 5k\Omega}{3k\Omega + 1k\Omega + 5k\Omega}$$

$$R_f \approx 555.556\Omega$$

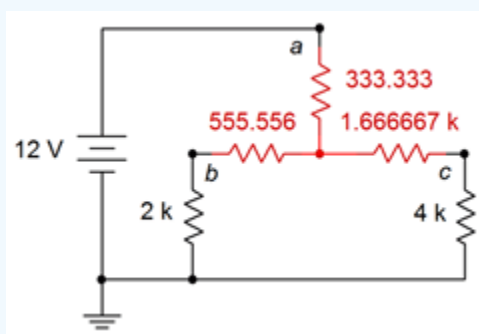

Figure 6.7.4 : Equivalent for the circuit of Figure 6.7.3 .

The equivalent network is placed back into the original circuit as shown in Figure 6.7.4 (red replaces blue). We now have a 333.333 Ω in series with 2.555556 kΩ || 5.666667 kΩ. To determine V_b and V_c the total equivalent resistance can be used to find the source current. From there, a current divider may be employed along with Ohm's law to find the node voltages.

$$R_{Total} = 333.333\Omega + 2.555556k\Omega || 5.666667k\Omega$$

$$R_{Total} \approx 2.0946k\Omega$$

$$I_s = \frac{E}{R_{Total}}$$

$$I_s \approx \frac{12V}{2.0946k\Omega}$$

$$I_s \approx 5.729mA$$

$$I_b = I_s \frac{R_{right}}{R_{left} + R_{right}}$$

$$I_b \approx 5.729mA \frac{5.666667k\Omega}{2.555556k\Omega + 5.666667k\Omega}$$

$$I_b \approx 3.9484mA$$

$$V_b = I_b \times R$$

$$V_b \approx 3.948mA \times 2k\Omega$$

$$V_b \approx 7.8968V$$

By similar process, V_c is approximately 7.1226 volts.

To verify the results of Example 6.7.1 , we can take the two node voltages, apply them back to the original circuit, and determine whether or not they satisfy KVL or KCL.

For example, examining node b, the current flowing through the 1 kΩ resistor has to equal the sum of the currents flowing through the 2 kΩ and 5 kΩ resistors, via KCL.

$$I_{1k} = \frac{V_a - V_b}{R}$$

$$I_{1k} \approx \frac{12V - 7.8968V}{1k\Omega}$$

$$I_{1k} \approx 4.1032mA$$

$$I_{5k} = \frac{V_b - V_c}{R}$$

$$I_{5k} \approx \frac{7.8968V - 7.1226V}{5k\Omega}$$

$$I_{5k} \approx 0.1548mA$$

$$I_{2k} = I_{1k} - I_{5k}$$

$$I_{2k} \approx 4.1032mA - 0.1548mA$$

$$I_{2k} \approx 3.9484mA$$

This result matches the current I_b calculated previously. For completeness sake, the process can be replicated for node c.

Computer Simulation

For further verification, both the original circuit of Figure 6.7.3 and the converted circuit of Figure 6.7.4 are entered into a simulator, as shown in Figure 6.7.5 .

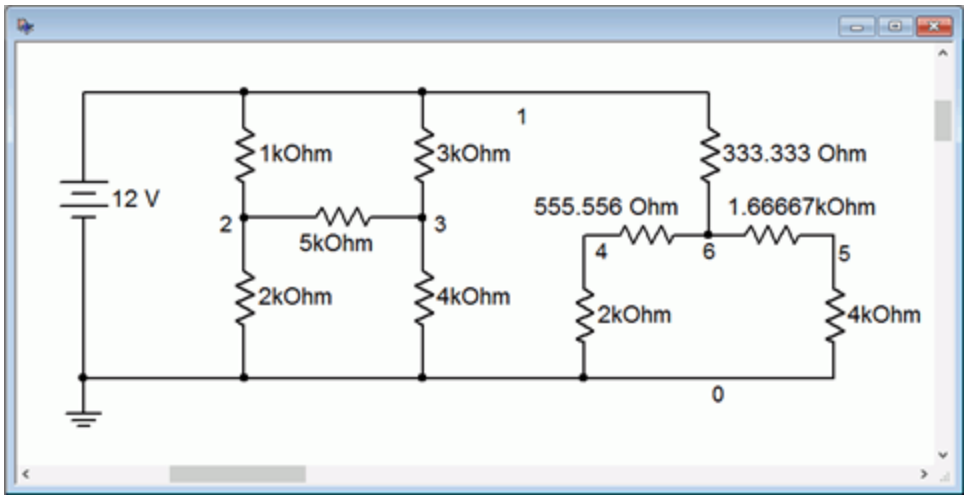

Figure 6.7.5 : Original and converted bridge circuits in simulator.

Both resistive networks are connected to a common power supply. Nodes 2 and 4 correspond to V_b, while nodes 3 and 5 correspond to V_c. The results of a DC operating point simulation are shown in Figure 6.7.6 .

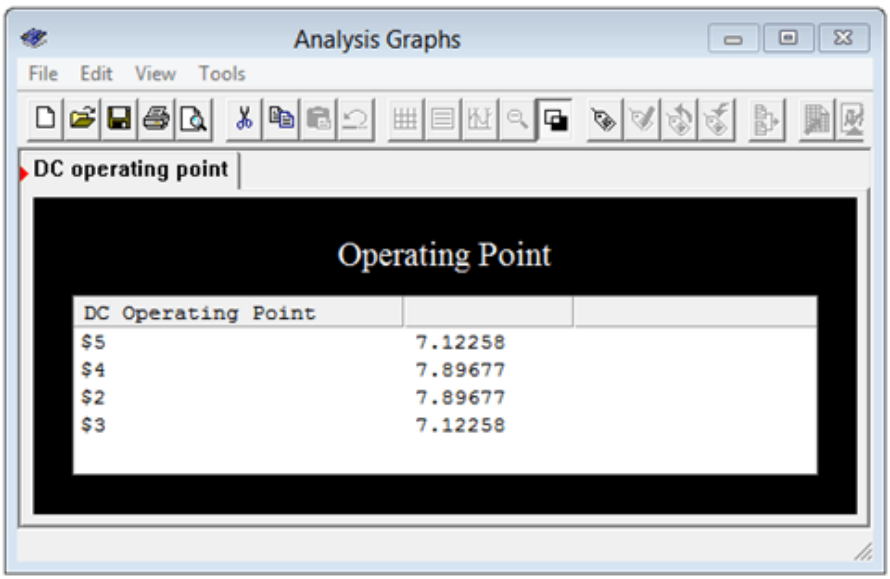

Figure 6.7.6 : Simulation results for original and converted bridges.

The voltages match each other perfectly, along with the manual calculation. In closing, we see that it is possible to swap delta networks with Y networks, and achieve identical results.

References

[1]In some sources the capital Greek letter delta (Δ) is used instead of spelling out “delta” and the letter Y is spelled out as “wye”. Thus, you may come across discussion of “Δ-Y ”, “Δ-wye” or “delta-wye” networks. It's all the same stuff.

This page titled 6.7: Delta-Y Conversions is shared under a CC BY-NC-SA 4.0 license and was authored, remixed, and/or curated by James M. Fiore via source content that was edited to the style and standards of the LibreTexts platform.

6.8: Summary

In this chapter we have examined several new techniques and theorems to assist with the analysis of DC electrical circuits. Beginning with more practical models for voltage and current sources, we added an internal resistance which sets limits on the source's maximum output. For a voltage source, this resistance is in series, its ideal value being a short. For current sources, the resistance is in parallel, its ideal value being an open.

Source conversions allow us to create an equivalent current source for any practical voltage source and vice versa. An equivalent source is one that will create the same voltage across (and current into) whatever the new source is connected to as did the original source. In some cases, this swap allows differing sources to be combined into a single source, simplifying analysis.

The superposition theorem states that, for any multi-source linear bilateral network, the contributions of each source may be determined independent of all other sources, the final result being the summation of the contributions, cognizant of current directions and voltage polarities. Thus, the original circuit of N sources generates N new circuits, one for each source under consideration and with all other sources replaced by their ideal internal resistance.

Thévenin's and Norton's theorems allow the simplification of complex linear single port (i.e., two connecting points) networks. The Thévenin equivalent consists of a voltage source with series a resistance while the Norton equivalent consists of a current source with a parallel resistance. These equivalents, when replacing the original sub-circuit, will create the same voltage across the remainder of the circuit with the same current draw. That is, the remainder of the circuit will see no difference between being driven by the original sub-circuit or by either the Thévenin or Norton equivalents.

The maximum power transfer theorem states that for a simple voltage source with an internal resistance driving a single resistor load, the maximum load power will be achieved when the load resistance equals the internal resistance. At this point, efficiency will be 50%. If the load resistance is higher than the internal resistance, the load power will not be as great, however, the system efficiency will increase.

Delta-Y conversions allow the generation of equivalent “three connection point” resistor networks. Resistor networks with three elements in the shape of a triangle or delta (with one connection point at each corner) can be converted into a three element network in the shape of a Y or T, or vice versa. The two versions will behave identically to the remainder of the circuit. This allows the simplification of some circuits and eases analysis.

Review Questions

1. Define the term linear bilateral network.

2. What are the ideal internal resistances of voltage sources and current sources?

3. Outline the process of converting a voltage source into a current source, and vice versa.

4. In general, describe the process of using superposition to analyze a multisource circuit.

5. What do Thévenin's and Norton's theorems state? How are they related?

6. What does the maximum power transfer theorem state? How might it be used with Thévenin's or Norton's theorems?

7. What are delta and Y configurations? How are they related?

This page titled 6.8: Summary is shared under a CC BY-NC-SA 4.0 license and was authored, remixed, and/or curated by James M. Fiore via source content that was edited to the style and standards of the LibreTexts platform.

6.9: Exercises

Analysis

1. For the circuit shown in Figure 6.9.1 , determine the equivalent current source.

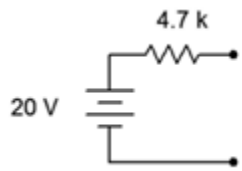

Figure 6.9.1

Answer 1

- 4.26mA source in parallel with 4.7k resistor

---

2. Given the circuit shown in Figure 6.9.2 , determine the equivalent current source.

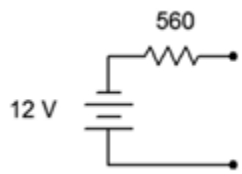

Figure 6.9.2

---

3. Determine the equivalent current source for the circuit shown in Figure 6.9.3 .

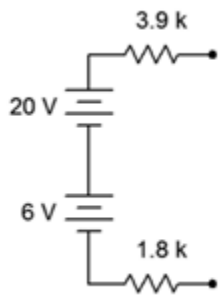

Figure 6.9.3

Answer 3

- 4.56mA source in parallel with 5.7k resistor

---

4. For the circuit shown in Figure 6.9.4 , determine the equivalent current source.

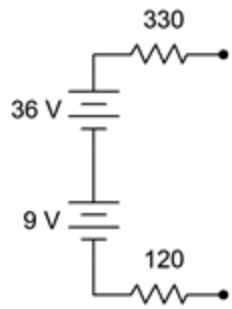

Figure 6.9.4

---

5. For the circuit shown in Figure 6.9.5 , determine the equivalent voltage source.

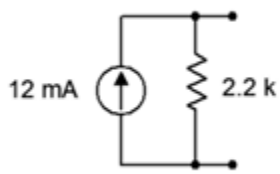

Figure 6.9.5

Answer 5

- 26.4V in series with 2.2k resistor

---

6. Given the circuit shown in Figure 6.9.6 , determine the equivalent voltage source.

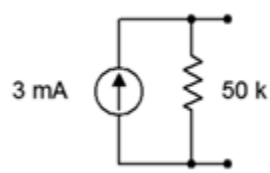

Figure 6.9.6

---

7. Determine the equivalent voltage source for the circuit shown in Figure 6.9.7 . 800\ohm

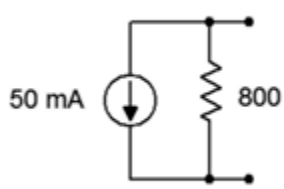

Figure 6.9.7

Answer 7

- -40V in series with 800 Ω resistor

---

8. For the circuit shown in Figure 6.9.8 , determine the equivalent voltage source.

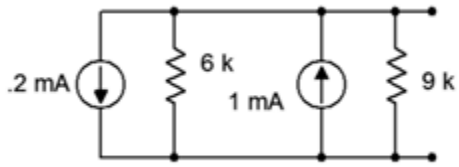

Figure 6.9.8

---

9. Given the circuit shown in Figure 6.9.9 , determine the equivalent voltage source.

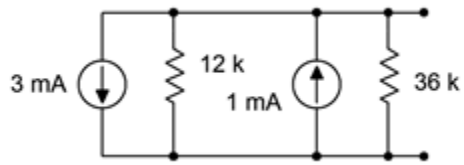

Figure 6.9.9

Answer 9

- -18V in series with 9kΩ resistor

---

10. Using source conversion, find V_b for the circuit shown in Figure 6.9.10 .

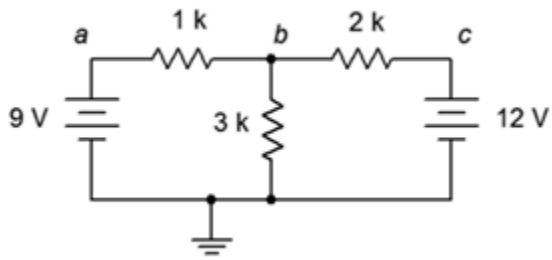

Figure 6.9.10

---

11. Using source conversion, find the current through the 3 kΩ resistor in the circuit of Figure 6.9.11 .

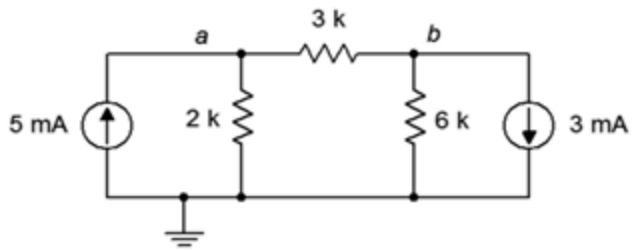

Figure 6.9.11

Answer 11

- 2.55mA left to right

---

12. Using source conversion, find V_b for the circuit shown in Figure 6.9.12 .

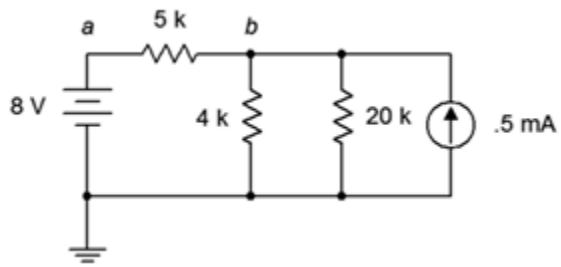

Figure 6.9.12

---

13. Using source conversion, find V_a for the circuit shown in Figure 6.9.13 .

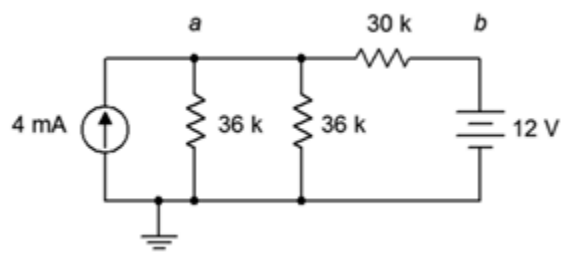

Figure 6.9.13

Answer 13

- 49.5V

---

14. Using source conversion, find V_b for the circuit shown in Figure 6.9.14 .

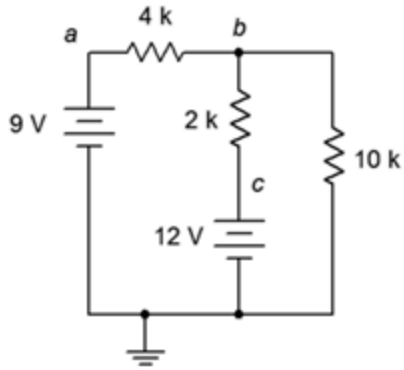

Figure 6.9.14

---

15. Using superposition, determine V_b for the circuit shown in Figure 6.9.10 .

Answer 15

- 8.18V

---

16. Using superposition, find the current through the 3 kΩ resistor for the circuit of Figure 6.9.10 .

---

17. Using superposition, find the current through the 3 kΩ resistor for the circuit of Figure 6.9.11 .

Answer 17

- 2.55mA

---

18. Using superposition, determine V_{ab} for the circuit shown in Figure 6.9.11 .

---

19. Using superposition, determine V_b for the circuit shown in Figure 6.9.12 .

Answer 19

- 4.2V

---

20. Using superposition, find the current through the 4 kΩ resistor for the circuit of Figure 6.9.12 .

---

21. Using superposition, find the current through the 30 kΩ resistor for the circuit of Figure 6.9.13 .

Answer 21

- 1.25mA

---

22. Using superposition, determine V_a for the circuit shown in Figure 6.9.13 .

---

23. Using superposition, determine V_{ba} for the circuit shown in Figure 6.9.14 .

Answer 23

- 0.7V

---

24. Using superposition, find the current through the 10 kΩ resistor for the circuit of Figure 6.9.14 .

---

25. Using superposition, find the current through the 1.5 kΩ resistor for the circuit of Figure 6.9.15 .

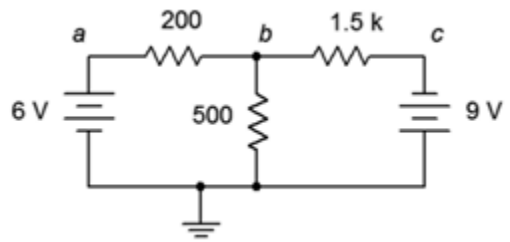

Figure 6.9.15

Answer 25

- 8.09mA

---

26. Using superposition, determine V_{ab} for the circuit shown in Figure 6.9.15 .

---

27. Using superposition, determine V_b for the circuit shown in Figure 6.9.16 .

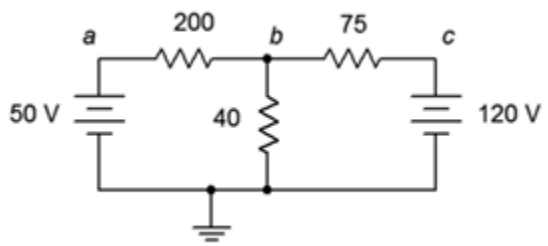

Figure 6.9.16

Answer 27

- 42.7V

---

28. Using superposition, find the current through the 200 Ω resistor for the circuit of Figure 6.9.16 .

---

29. Using superposition, find the current through the 4 kΩ resistor for the circuit of Figure 6.9.17 .

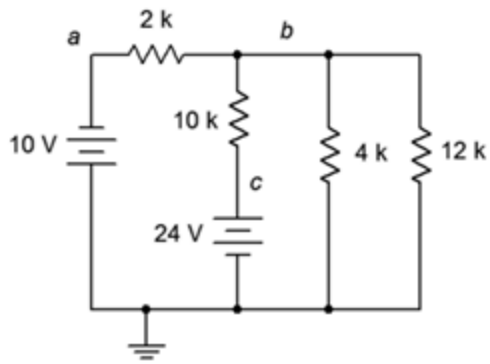

Figure 6.9.17

Answer 29

- 0.696mA

---

30. Using superposition, determine V_b for the circuit shown in Figure 6.9.17 .

---

31. Is it possible to determine V_b in Figure 6.9.17 by using source conversions instead of superposition? Why/why not?

Answer 31

- Yes, it's only current sources and resistors in parallel

---

32. Using superposition, determine V_{bc} for the circuit shown in Figure 6.9.18 .

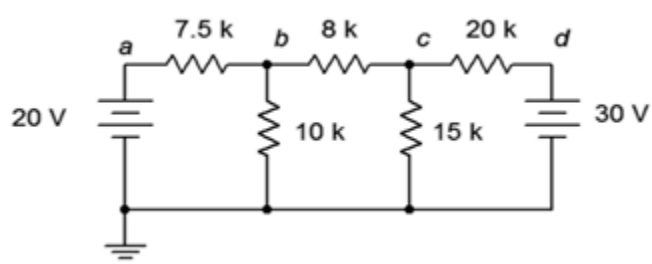

Figure 6.9.18

---

33. Using superposition, find the current through the 10 kΩ resistor for the circuit of Figure 6.9.18 .

Answer 33

- 1.17mA

---

34. Using superposition, find the currents through the 100 Ω and 700 Ω resistors for the circuit shown in Figure 6.9.19 .

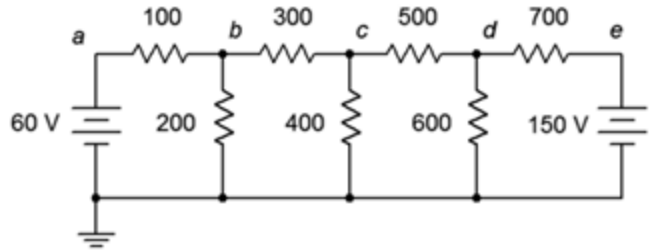

Figure 6.9.19

35. Using superposition, determine V_{bd} for the circuit shown in Figure 6.9.19 .

Answer 35

- -15.65V

36. Is it possible to determine V_{bd} in Figure 6.9.19 by using source conversions instead of superposition? Why/why not?

37. Using superposition, determine V_{ad} for the circuit shown in Figure 6.9.20 .

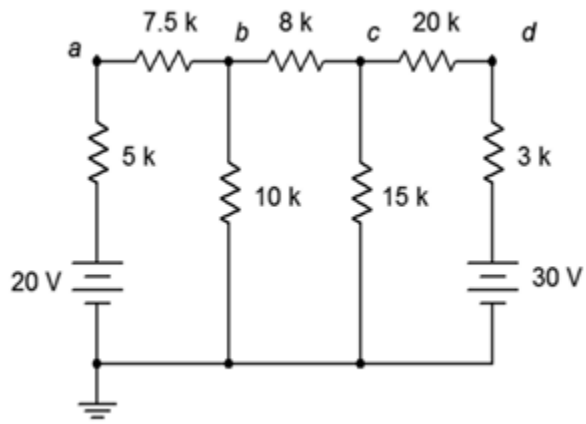

Figure 6.9.20

Answer 37

- -11.6V

38. Using superposition, find the current through the 20 kΩ resistor for the circuit shown in Figure 6.9.20 .

39. Using superposition, find the current through the 12 kΩ resistor for the circuit shown in Figure 6.9.21 .

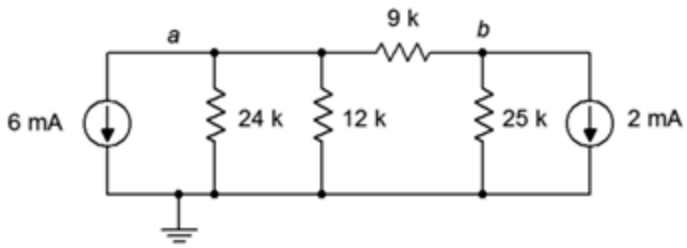

Figure 6.9.21

Answer 39

- 4.03mA (up)

---

40. Using superposition, determine V_b for the circuit shown in Figure 6.9.21 .

---

41. Using superposition, determine V_b for the circuit shown in Figure 6.9.22 .

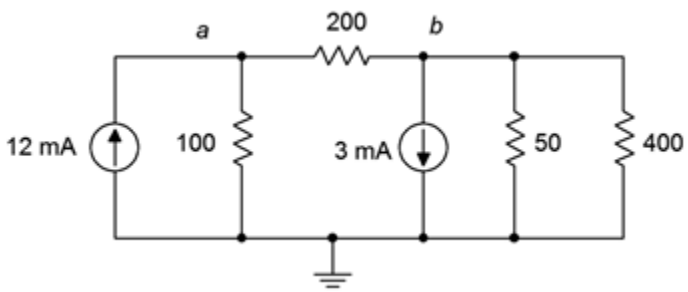

Figure 6.9.22

Answer 41

- 38.7mV

---

42. Using superposition, find the current through the 100 Ω resistor for the circuit of Figure 6.9.22 .

---

43. Using superposition, find the current through the 5 kΩ resistor for the circuit of Figure 6.9.23 .

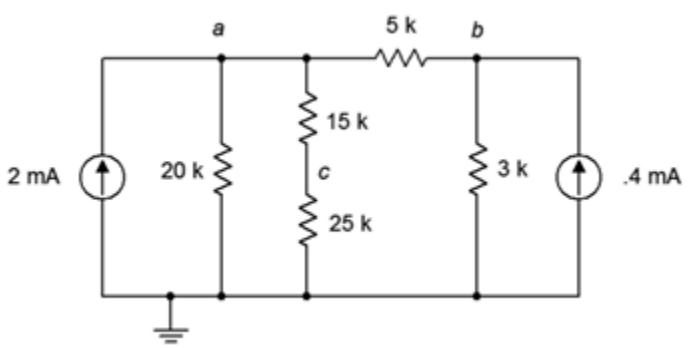

Figure 6.9.23

Answer 43

- 1.19mA left to right

---

44. Using superposition, determine V_c for the circuit shown in Figure 6.9.23 .

---

45. Given the circuit shown in Figure 6.9.24 , determine the Thévenin equivalent circuit that is driving the 4 kΩ resistor.

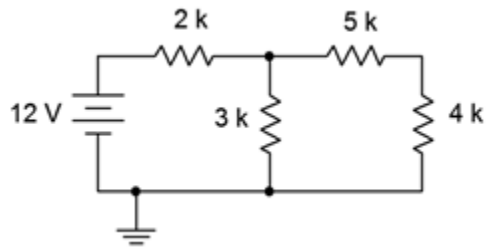

Figure 6.9.24

Answer 45

- 7.2V with 6.2kΩ

---

46. Given the circuit shown in Figure 6.9.24 , determine the Norton equivalent circuit driving the 4 kΩ resistor.

---

47. Given the circuit shown in Figure 6.9.24 , determine the Norton equivalent circuit driving the 12 kΩ resistor.

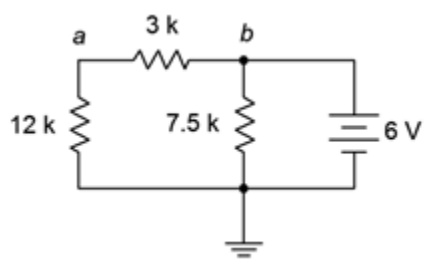

Figure 6.9.25

Answer 47

- 2mA with 3kΩ resistor

---

48. Determine the Thévenin equivalent circuit driving the 12 kΩ resistor for the circuit shown in Figure 6.9.25 .

---

49. Given the circuit shown in Figure 6.9.26 , determine the Thévenin equivalent circuit that is driving the 20 kΩ resistor.

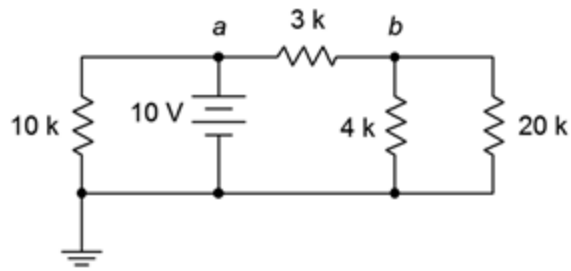

Figure 6.9.26

Answer 49

- 5.71V with 1.71$k\Omega$ resistor

---

50. For the circuit shown in Figure 6.9.26 , determine the Norton equivalent circuit driving the 4 kΩ resistor.

---

51. Given the circuit shown in Figure 6.9.27 , determine the Norton equivalent circuit driving the 40 Ω resistor.

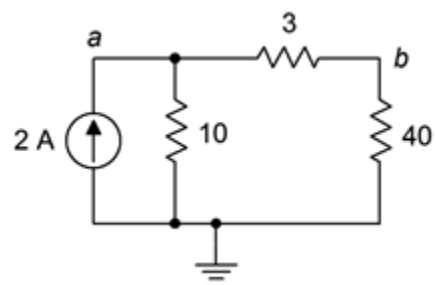

Figure 6.9.27

Answer 51

- 1.538A with 13 Ω resistor

---

52. Determine the Thévenin equivalent circuit driving the 10 Ω resistor for the circuit shown in Figure 6.9.27 .

---

53. Given the circuit shown in Figure 6.9.28 , determine the Norton equivalent circuit driving the 12 kΩ resistor.

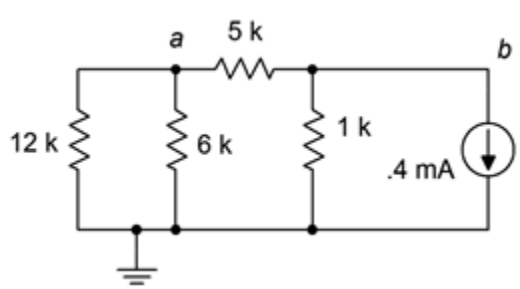

Figure 6.9.28

Answer 53

- 66.7 μA with 3 $k\Omega$ resistor

---

54. Given the circuit of Figure 6.9.24 , determine the power in the 4 kΩ resistor. If this resistor can be replaced with any other value, is it possible to achieve a higher power? Why/why not?

---

55. Given the circuit of Figure 6.9.25 , determine the power in the 12 kΩ resistor. If this resistor can be replaced with any other value, is it possible to achieve a higher power? Why/why not?

Answer 55

- 1.92mW. Yes, match R_{Th}

---

56. Given the circuit of Figure 6.9.27 , determine the power in the 40 Ω resistor. If this resistor can be replaced with any other value, is it possible to achieve a higher power? Why/why not?

---

57. Given the circuit of Figure 6.9.28 , determine the power in the 6 kΩ resistor. If this resistor can be replaced with any other value, is it possible to achieve a higher power? Why/why not?

Answer 57

- 4.27μW. Yes, match R_{Th}

Design

58. Consider the 4 kΩ resistor to be the load in Figure 6.9.24 . Determine a new value for the load in order to achieve maximum load power. Also determine the maximum load power.

---

59. Consider the 12 kΩ resistor to be the load in Figure 6.9.25 . Determine a new value for the load in order to achieve maximum load power. Also determine the maximum load power.

Answer 59

- 1.92mW. Yes, match R_{Th}

---

60. Consider the 40 Ω resistor to be the load in Figure 6.9.27 . Determine a new value for the load in order to achieve maximum load power. Also determine the maximum load power.

---

61. Consider the 6 kΩ resistor to be the load in Figure 6.9.28 . Determine a new value for the load in order to achieve maximum load power. Also determine the maximum load power.

Answer 61

- 4kΩ, 4.44μW

---

62. Redesign the circuit of Figure 6.9.15 so that it uses only current sources and produces the same component currents and voltages as the original circuit.

---

63. Redesign the circuit of Figure 6.9.17 so that it uses only current sources and produces the same component currents and voltages as the original circuit.

Answer 63

- Replace 10V+2kΩ with 5mA||2kΩ and 24V+10kΩ with 2.4mA||10kΩ

---

64. Redesign the circuit of Figure 6.9.21 so that it uses only voltage sources and produces the same component currents and voltages as the original circuit.

---

65. Redesign the circuit of Figure 6.9.23 so that it uses only voltage sources and produces the same component currents and voltages as the original circuit.

Answer 65

- Replace 2mA||20kΩ with 40V + 20kΩ, and 0.4mA||3kΩ with 1.2V + 3kΩ

---

66. Convert the delta network of Figure 6.9.29 into a Y network.

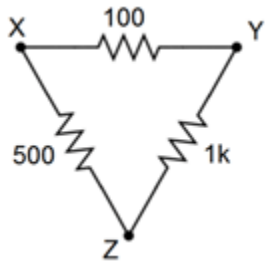

Figure 6.9.29

---

67. Convert the pi network of Figure 6.9.30 into a T network.

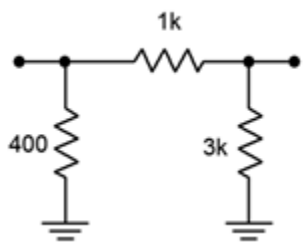

Figure 6.9.30

Answer 67

YouTube Video

This interactive element is not available in this format. Visit the link or scan the QR code to access it online.

View this YouTube Video online

68. Convert the Y network of Figure 6.9.31 into a delta network.

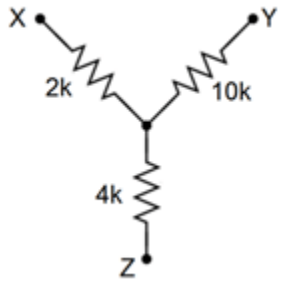

Figure 6.9.31

69. Convert the T network of Figure 6.9.32 into a pi network.

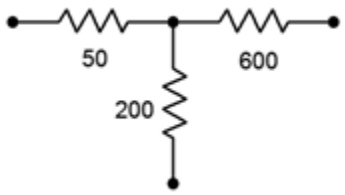

Figure 6.9.32

Answer 69

YouTube Video

This interactive element is not available in this format. Visit the link or scan the QR code to access it online.

View this YouTube Video online

Challenge

70. Redesign the circuit of Figure 6.9.33 so that it uses only current sources and produces the same node voltages as the original circuit.

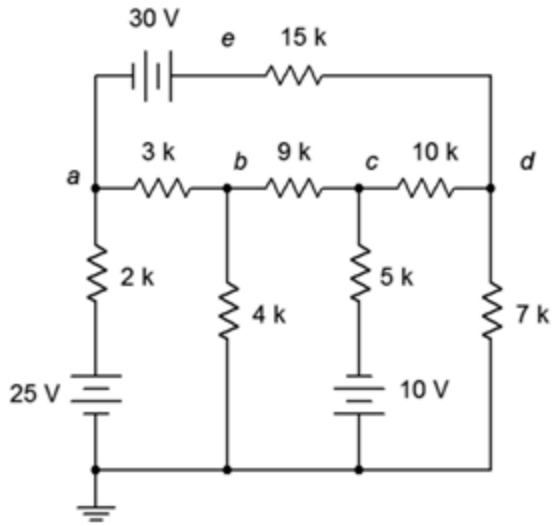

Figure 6.9.33

71. Using any combination of techniques, find the current through the 9 kΩ resistor for the circuit of Figure 6.9.33 .

72. Using any combination of techniques, determine V_{bc} for the circuit shown in Figure 6.9.33 .

73. Is it possible to determine V_{bc} in Figure 6.9.33 by using just source conversions? Why/why not?

74. Using superposition, find the current through the 25 Ω resistor for the circuit of Figure 6.9.34 .

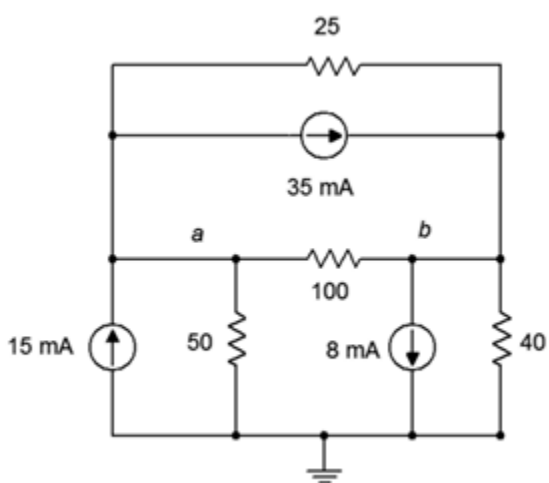

Figure 6.9.34

75. Using superposition, find V_{ab} in the circuit of Figure 6.9.34 .

76. Redesign the circuit of Figure 6.9.34 using only voltage sources so that it achieves the same node voltages as the original.

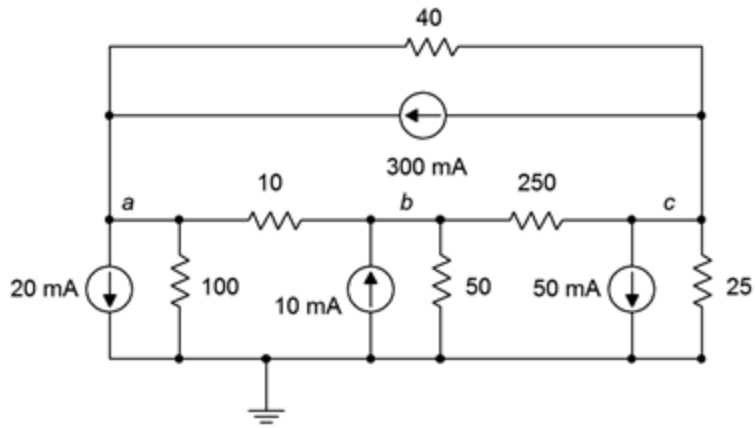

Figure 6.9.35

77. Is it possible to determine V_{bc} in Figure 6.9.35 by using just source conversions or just superposition? Why/why not?

78. Using any combination of techniques, find the current through the 100 Ω resistor for the circuit shown in Figure 6.9.35 .

79. Redesign the circuit of Figure 6.9.35 so that it uses only voltage sources and produces the same node voltages as the original circuit.

80. Determine the Thévenin and Norton equivalents driving the 40 Ω resistor for the circuit shown in Figure 6.9.16 .

81. Determine the Thévenin and Norton equivalents driving the 12 kΩ resistor for the circuit shown in Figure 6.9.17 .

Answer 81

Thevenin's Equivalent Answer:

YouTube Video

This interactive element is not available in this format. Visit the link or scan the QR code to access it online.

View this YouTube Video online

82. Given the circuit of Figure 6.9.26 , determine if the 4 kΩ resistor is the optimal value to achieve maximum power dissipation in that resistor. If it is not, determine the value that will produce maximum power in the resistor along with the resulting power.

83. For the circuit of Figure 6.9.36 , determine an equivalent circuit using just a single voltage source.

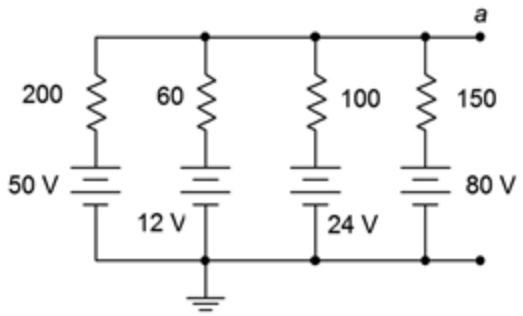

Figure 6.9.36

Simulation

84. Using DC bias simulations, compare the original circuit of problem 1 to its converted equivalent. Do this by connecting a resistor to the output terminals, trying several different resistance values and checking to see if the two circuits always produce the same voltage across this resistor.

---

85. Using DC bias simulations, compare the original circuit of problem 5 to its converted equivalent. Do this by connecting a resistor to the output terminals, trying several different resistance values and checking to see if the two circuits always produce the same voltage across this resistor.

---

86. Perform a DC bias simulation on the circuit of problem 11 to verify the node voltages.

---

87. Perform a DC bias simulation on the circuit of problem 13 to verify the node voltages.

---

88. Perform a DC bias simulation on the circuit of problem 19 to verify the node voltages.

---

89. Perform a DC bias simulation on the circuit of problem 21 to verify the resistor current.

---

90. Create DC bias simulations of the original and equivalent circuits generated in problem 45 to determine if the equivalent circuit is truly equivalent. Do this by substituting several different values for the 4 kΩ resistor in both circuits to see if the same load voltage is obtained for both circuits.

---

91. Create DC bias simulations of the original and equivalent circuits generated in problem 49 to determine if the equivalent circuit is truly equivalent. Do this by substituting several different values for the 20 kΩ resistor in both circuits to see if the same load voltage is obtained for both circuits.

---

92. Create DC bias simulations of the original and equivalent circuits generated in problem 53 to determine if the equivalent circuit is truly equivalent. Do this by substituting several different values for the 12 kΩ resistor in both circuits to see if the same load voltage is obtained for both circuits.

---

93. Perform a DC bias simulation on the circuit of problem 63 to verify that the node voltages of the new design match those of the original.

---

94. Perform a DC bias simulation on the circuit of problem 65 to verify that the node voltages of the new design match those of

the original.

---

95. Using either Monte Carlo simulation or multiple DC bias simulations, verify that the resistance calculated in problem 55 achieves maximum power. Do this by trying several resistor values near the calculated value, and determining the power for each based on the squared load voltages.

---

96. Using either Monte Carlo simulation or multiple DC bias simulations, verify that the resistance calculated in problem 56 achieves maximum power. Do this by trying several resistor values near the calculated value, and determining the power for each based on the squared load voltages.

This XKCD comic is too large to fit on this page. Just go to this link instead:

https://xkcd.com/1732/

This page titled 6.9: Exercises is shared under a CC BY-NC-SA 4.0 license and was authored, remixed, and/or curated by James M. Fiore via source content that was edited to the style and standards of the LibreTexts platform.

7: NODAL AND MESH ANALYSIS, DEPENDENT SOURCES

Learning Objectives

After completing this chapter, you should be able to:

- Utilize nodal analysis techniques to solve for voltages in multi-source series-parallel networks.
- Utilize mesh analysis techniques to solve for currents in multi-source series-parallel networks.
- Analyze networks using dependent voltage and current sources.

7.1: Introduction

7.2: Nodal Analysis

7.3: Mesh Analysis

7.4: Dependent Sources

7.5: Summary

7.6: Exercises

This page titled 7: Nodal and Mesh Analysis, Dependent Sources is shared under a CC BY-NC-SA 4.0 license and was authored, remixed, and/or curated by James M. Fiore via source content that was edited to the style and standards of the LibreTexts platform.

7.1: Introduction

This chapter presents the culmination of the analysis of DC circuits that employ resistors along with any number of voltage and/or current sources. Here we shall focus on nodal analysis and mesh analysis. Both nodal analysis and mesh analysis generate a system of simultaneous linear equations that are used to solve the circuit for various voltages or currents. There are several methods that can be used to solve the simultaneous equations including substitution, Gauss-Jordan elimination and expansion by minors. These methods are reviewed in Appendix B and are not covered in this chapter. Instead, to keep clutter to a minimum and focus on the circuit analysis aspects, the explanations and examples will simply detail the process of examining the circuit and applying basic circuit laws to create the system of equations. From there, the specific technique used to solve these simultaneous equations is up to you based on your personal preferences.

It is particularly efficient to obtain a more advanced scientific calculator that can solve these equations directly rather than plowing through the solution manually. By doing so, you can spend your precious time mastering the process of circuit analysis and creating the equations. Manual solution techniques, though not necessarily difficult, can be tedious, time consuming and error prone. If you plan on continuing your study into AC electrical circuits, you should consider obtaining a calculator that can solve simultaneous equations with complex coefficients. Such calculators can be expensive when purchased new, such as the Texas Instruments TI-89 and Nspire models. On the used market, perfectly satisfactory older models such as the TI-85 and TI-86 can be found at considerable discount. Another model to consider is the Casio FX-9750GII, although it is not quite as powerful as some of the other units mentioned.

Along with nodal and mesh, we shall also introduce the concept of dependent sources. These are current and voltage sources whose value is not fixed to some particular value, but rather is dependent on some other current or voltage in the circuit. What makes this interesting is that this controlling current or voltage may itself be affected by the value produced by the dependent source. Dependent sources are often used to model the behavior of active electronic devices such as bipolar and field effect transistors.

This page titled 7.1: Introduction is shared under a CC BY-NC-SA 4.0 license and was authored, remixed, and/or curated by James M. Fiore via source content that was edited to the style and standards of the LibreTexts platform.

7.2: Nodal Analysis

Nodal analysis is a technique that can be applied to virtually any circuit. In general use, it might be considered a universal solution technique as there are no practical circuit configurations that it cannot handle. Nodal analysis relies on the application of Kirchhoff's current law to create a series of node equations that can be solved for node voltages. These equations are based on Ohm's law and will be of the form $I = V/R$, or more generally, $I = (1/RX) \cdot VA + (1/RY) \cdot VB \ldots$ Once the node voltages are obtained, finding any branch currents or component powers becomes an almost trivial exercise. We will examine two variations; a general version that can be used with both voltage and current sources, and a second somewhat quicker version that can be used with circuits only driven by current sources.

General Method

Consider the circuit shown in Figure 7.2.1 . We begin by labeling connection nodes and assigning current directions. We are particularly interested in current junctions, that is, places where currents can combine or split. These are also known as summing nodes and are circled in green on the figure. The current directions are chosen arbitrarily and may be the opposite of reality. This is not a problem. If we assign directions that are wrong, the resulting directions will ultimately show up reversed but the computed node voltages will be just fine.

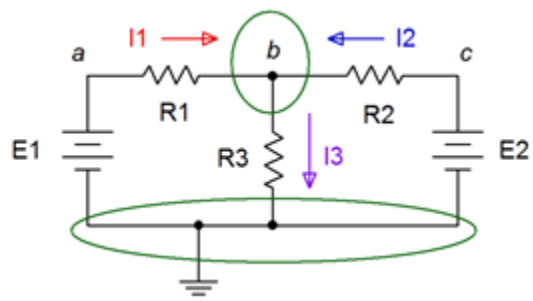

Figure 7.2.1 : Basic dual voltage source circuit with currents and nodes defined.

One node is chosen as the reference. This is the point to which all other node voltages will be measured against. Typically, the reference node is ground, although it does not have to be.

We now write a current summation equation for each summing node, except for the reference node. In this circuit there is only one node where currents combine (other than ground) and that's node b. Points a and c are places where components connect, but they are not summing nodes, so we can ignore them for now. Using KCL on node b we can say:

$$I_1 + I_2 = I_3$$

Next, we describe these currents in terms of the node voltages and associated components via Ohm's law. For example, I_3 is the node b voltage divided by R_3 while I_1 is the voltage across R_1 divided by R_1. This voltage is $V_a - V_b$. Therefore,

$$\frac{V_a - V_b}{R_1} + \frac{V_c - V_b}{R_2} = \frac{V_b}{R_3}$$

Noting that Missing argument for \frac and Missing argument for \frac, with a little algebra this can be reduced to a series of products of conductances and voltages:

$$\left(\frac{1}{R_1}\right) E_1 + \left(\frac{1}{R_2}\right) E_2 = \left(\frac{1}{R_1} + \frac{1}{R_2} + \frac{1}{R_3}\right) V_b$$

All quantities are known except for V_b and thus it is easily found with a little more algebra. As we shall see, this conductance-voltage product format turns out to be a convenient way of writing these equations. Also, note that the first two terms on the left reduce to fixed current values. If there had been more nodes, there would have been more equations, one for each node.

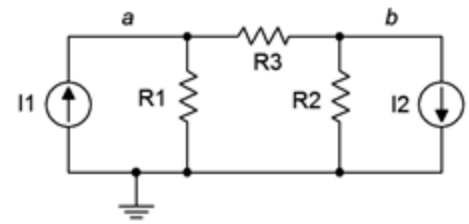

Figure 7.2.2 : Basic dual current source circuit.

For current sources, a more direct approach is possible. Consider the circuit of Figure 7.2.2 . We start as before, identifying nodes and labeling currents. This is shown in Figure 7.2.3 . We then write current summation equations at each node (except for ground). We consider currents entering a node as positive, and exiting as negative.

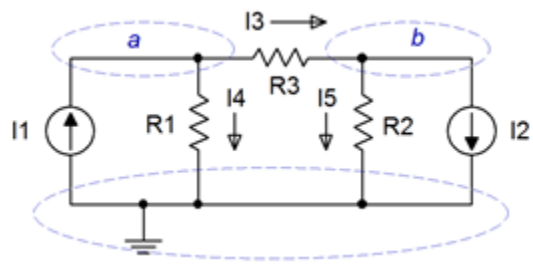

Figure 7.2.3 : Basic dual current source circuit with currents and nodes defined.

$$\text{Node } a: I_1 = I_3 + I_4$$

$$\text{Node } b: I_3 = I_2 + I_5, \text{ and rearranging in terms of the fixed source,}$$

$$\text{Node } b: -I_2 = -I_3 + I_5$$

The currents are then described by their Ohm's law equivalents:

$$\text{Node } a: I_1 = \frac{V_a - V_b}{R_3} + \frac{V_a}{R_1}$$

$$\text{Node } b: -I_2 = -\frac{V_a - V_b}{R_3} + \frac{V_b}{R_2}$$

Expanding and collecting terms yields:

$$\text{Node } a: I_1 = \left(\frac{1}{R_1} + \frac{1}{R_3}\right) V_a - \left(\frac{1}{R_3}\right) V_b$$

$$\text{Node } b: -I_2 = -\left(\frac{1}{R_3}\right) V_a + \left(\frac{1}{R_3} + \frac{1}{R_2}\right) V_b$$

As the resistor values and currents are known, simultaneous equation solution techniques may be used to solve for the node voltages. Once again, there will be as many equations as node voltages. It is very important that the terms “line up” when the final system of equations is written out. That is, there should be a column for the V_a terms, a column for the V_b terms, and so on. They should not be written out in random order. This format will make it much it easier to enter the coefficients into a calculator or solve manually.

Example 7.2.1

Determine V_b in the circuit of Figure 7.2.4 .

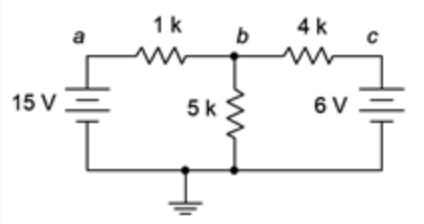

Figure 7.2.4 : Circuit for Example 7.2.1 .

This circuit has two current summing nodes, ground and node b. Let us assume that the currents from the two sources flow into node b and the exiting current flows down through the 5 kΩ resistor. It will be convenient if we find the conductance equivalents of the resistors before continuing. Taking the reciprocals we find: 1 kΩ = 1 mS, 4 kΩ = 0.250 mS, and 5 kΩ = 0.2 mS. Through KCL we can say:

$$I_{1k} + I_{4k} = I_{5k}$$

Replacing these currents with their Ohm's law equivalents yields,

$$\frac{15V - V_b}{1k\Omega} + \frac{6V - V_b}{4k\Omega} = \frac{V_b}{5k\Omega}$$

collecting terms,

$$15mA + 1.5mA = \left(\frac{1}{1k\Omega} + \frac{1}{4k\Omega} + \frac{1}{5k\Omega}\right) V_b$$

and solving for V_b,

$$V_b = \frac{16.5mA}{1mS + 0.25mS + 0.2mS}$$

$$V_b = 11.379 \text{ volts}$$

As V_b is higher than the 6 volt source, our assumed current direction for the 4 kΩ resistor was incorrect; we assumed right to left but it is in fact left to right, flowing from 11.379 volts to 6 volts. As you can see, this did not present a problem.

For comparison sake, this circuit was solved in Chapter 6 using source conversions and also using superposition.

Inspection Method

The system of equations can be obtained directly through inspection if the circuit contains no voltage sources. For the node under inspection, sum all of the current sources connected to it to obtain the current constant. The conductance term for that node will be the sum of all of the conductances connected to that node. For the other node conductances, determine the conductances between the node under inspection and these other nodes. These terms will all be negative. As a crosscheck, the set of equations produced must exhibit diagonal symmetry, that is, if a diagonal is drawn from the upper left to the lower right through the conductance-voltage pairs, then the coefficients found above the diagonal will have to match those found below the diagonal as we move perpendicular from the diagonal. This is illustrated in Figure 7.2.5 . Diagonal symmetry can be seen in Example 7.2.1 by noting the matching "$-1/R_3$" coefficients in the final pair of equations. As an example of the inspection method, focusing on node a in Figure 7.2.2 , we find the fixed current source I_1 feeding it (entering, therefore positive). The conductances directly connected to node a are $1/R_1$ and $1/R_3$, yielding the coefficient for V_a. The only conductance common between nodes a and b is $1/R_3$, yielding the V_b coefficient.

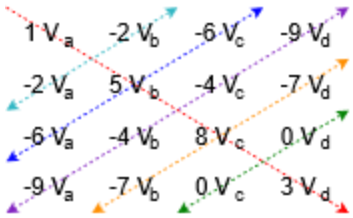

Figure 7.2.5 : Diagonal symmetry.

The inspection method is summarized as follows:

1. Verify that the circuit uses only current sources with resistors and no voltage sources. If voltage sources exist, they must be converted to current sources before proceeding.

2. Find all of the current summing nodes and number them. Also decide on the reference node (usually ground).

3. To generate an equation, locate the first node. This is the node of interest and the next few steps will be associated with it.

4. Sum the current sources feeding the node of interest. Entering is deemed positive while exiting is deemed negative. The sum is placed on one side of the equals sign.

5. Next, find all of the resistors connected to the node of interest and write them as a sum of conductances on the other side of the equals sign, the group being multiplied by this node's voltage (e.g., V_1).

6. Now find all of the resistors that are connected to the node of interest and to other nodes (except the ground reference). For each of these other nodes, multiply the sum of the conductances between the node of interest and this other node by this other node's voltage, and then subtract that product from the equation built so far. Once all other nodes are considered, this equation is finished.

7. Find the next node and treat this as the new node of interest.

8. Repeat steps 4 through 7 until all nodes have been treated as the node of interest. Each iteration creates a new equation. There will be as many equations as there are nodes, less the reference node. Check for diagonal symmetry and solve.

The inspection method is best observed in action; as in the following example.

Example 7.2.2

Determine V_a and V_b in the circuit of Figure 7.2.6 . Also determine the current flowing through the 100 Ω resistor.

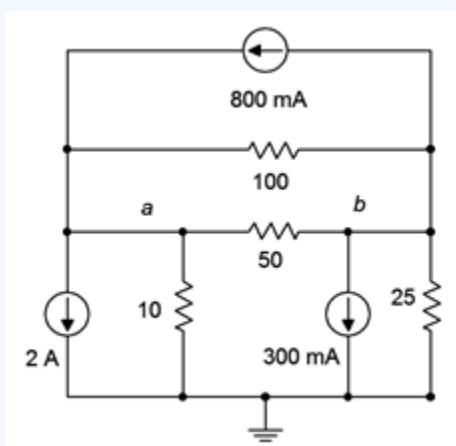

Figure 7.2.6 : Circuit for Example 7.2.2 .

This circuit has three current summing nodes; ground, node a and node b. Also, it uses only current sources and no voltage sources. Therefore, we are able to use the inspection method to obtain the system of equations (in this case, two equations).

We begin by focusing on node a, our first node of interest. We will build the first expression piece by piece. First we find the current sources feeding this node:

$$800mA - 2A = ...$$

Next, we find all of the resistors connected to node a and write them as conductances, the group being multiplied by node voltage a:

$$800mA - 2A = \left(\frac{1}{10\Omega} + \frac{1}{50\Omega} + \frac{1}{100\Omega}\right) V_a ...$$

Now find all of the resistors that are connected to this node and to the other nodes. Multiply those resistors (expressed as conductances) by the other associated node voltages and subtract the products from the expression built so far. Repeat for all remaining nodes except the ground reference. In this example there is only one other node, node b, and thus only one iteration.

$$800mA - 2A = \left(\frac{1}{10\Omega} + \frac{1}{50\Omega} + \frac{1}{100\Omega}\right) V_a - \left(\frac{1}{50\Omega} + \frac{1}{100\Omega}\right) V_b$$

Finally, simplify the constants and coefficients, and the first expression is complete:

$$-1.2A = 130mSV_a - 30mSV_b$$

Now we repeat the entire process for the next equation. Node b is our new node of interest. The fixed current sources are:

$$-800mA - 300mA = ...$$

Next, we find all of the resistors connected to node b and write them as conductances, the group being multiplied by node voltage b:

$$-800mA - 300mA = \left(\frac{1}{25\Omega} + \frac{1}{50\Omega} + \frac{1}{100\Omega}\right) V_b ...$$

Now we find all of the resistors that are connected to this node and to the other nodes. Multiply those resistors (expressed as conductances) by these other node voltages and subtract those products from the expression built so far. Make sure the terms align vertically based on the node voltages.

$$-800mA - 300mA = -\left(\frac{1}{50\Omega} + \frac{1}{100\Omega}\right) V_a + \left(\frac{1}{25\Omega} + \frac{1}{50\Omega} + \frac{1}{100\Omega}\right) V_b$$

Finally, simplify the constants and coefficients, and this expression is complete:

$$-1.1A = -30mSV_a + 70mSV_b$$

We now have two equations with two unknowns. Let's check for diagonal symmetry:

$$-1.2A = 130mSV_a - 30mSV_b$$

$$-1.1A = -30mSV_a + 70mSV_b$$

The perpendicular coefficient is –30 mS on each side. We can now solve the system. The results are V_a = –14.27 volts and V_b = –21.83 volts. The current flowing through the 100 resistor is (–14.27 V – (–21.83 V))/100 Ω, or approximately 75.6 mA flowing left to right.

Let's verify that these values are correct. We can perform a KCL summation at node a and see if it balances. We already know that 2 amps and 75.6 milliamps exit while 800 milliamps enters. We only need to find the currents through the 10 Ω and 50 Ω resistors. First, notice that the 50 Ω sees the same voltage as the 100 Ω resistor. As it is half the resistance, it must produce twice the current, or 151.2 milliamps exiting. The current through the 10 Ω is found via Ohm's law, or –14.27 V/10 Ω, which is 1.427 amps entering.

$$\text{Entering: } 0.8A + 1.427A = 2.227A$$

$$\text{Exiting: } 2A + 0.0756A + 0.1512A \approx 2.227A$$

KCL is satisfied. To complete the verification we perform the same summation on node b. This is left as an exercise.

Example 7.2.3

Write the node equations for the circuit of Figure 7.2.7 .

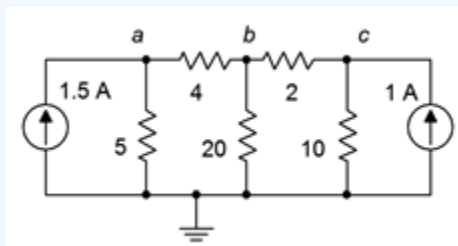

Figure 7.2.7 : Circuit for Example 7.2.3 .

This circuit has four current summing nodes; ground and nodes a, b, and c. Also, it uses only current sources and no voltage sources. Therefore, we are able to use the inspection method to obtain the system of equations (three equations).

As we have already seen, we will wind up with conductance values in the final equations. We can save some work later by finding the conductance value of each resistor right now. The result is shown in Figure 7.2.8 .

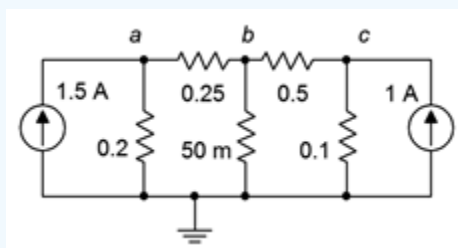

Figure 7.2.8 : Circuit of Figure 7.2.7 shown with conductances instead of resistances.

We begin by focusing on node a, our first node of interest. We will build the first expression piece by piece. First we find the current sources feeding this node. That's just the 1.5 A source, entering is positive.

$$1.5A = ...$$

Next, we find all of the conductances connected to node a and multiply by node voltage a:

$$1.5A = (0.2S + 0.25S)V_a ...$$

Find all of the conductances that are connected to this node and to the other nodes. Multiply those conductances by the other associated node voltages and subtract those products from the expression built so far. Repeat for all remaining nodes except the ground reference.

$$1.5A = (0.2S + 0.25S)V_a - (0.25S)V_b - (0)V_c$$

Finally, simplify the constants and coefficients, and the first expression is complete:

$$1.5A = 0.45SV_a - 0.25SV_b - 0V_c$$

We leave the zero term in just for alignment. Now we repeat the entire process for the next equation. The node of interest is now node b. Here is the result:

$$0 = -0.25SV_a + 0.8SV_b - 0.5V_c$$

And finally for node c we have:

$$1A = 0V_a - 0.5SV_b + 0.6V_c$$

Our three equations are (with some padding to see the columns better):

$$1.5A = 0.45SV_a - 0.25SV_b - 0V_c$$

$$0 = -0.25SV_a + 0.8SV_b - 0.5V_c$$

$$1A = -0V_a - 0.5SV_b + 0.6V_c$$

Check for diagonal symmetry: we have pairs of −0.25, 0, and −0.5 straddling the diagonal.

Now the system of equations can be solved for the three node voltages and verified using KCL summations at each node. This is left as an exercise.

Converting Sources and Other Simplifications

Given circuits with voltage sources, it may be easier to convert them to current sources and then apply the inspection technique rather than using the general approach outlined initially. There is one trap to watch out for when using source conversions: the voltage across or current through a converted component will most likely not be the same as the voltage or current in the original circuit. This is because the location of the converted component will have changed. For example, the circuit in Figure 7.2.9 could be solved using nodal analysis by converting the voltage source and the associated resistance into a current source. That is, E/R_1 would be converted into a source I_3 with a parallel resistor R_1. This is shown in Figure 7.2.10 .

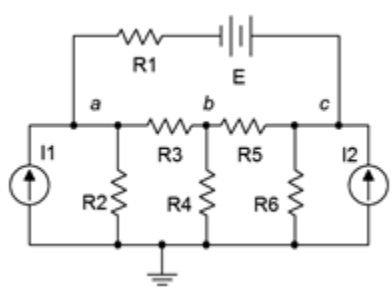

Figure 7.2.9 : Circuit with both current and voltage sources.

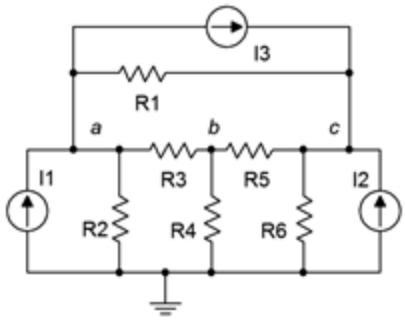

Figure 7.2.10 : Circuit converted to current sources only.

Here is the trap: in the converted circuit, although R_1 still connects to node a, the other end no longer connects to the voltage source. Rather, the right side now connects to node c. Therefore, the voltage drop across R_1 in the converted circuit is not likely to equal the voltage drop seen across R_1 in the original circuit (the only way they would be equal is if E was 0 volts). In the converted circuit, nodes a and c have not changed from the original, so the original voltage across R_1 can be determined via V_a, V_c and E in the original circuit.

If a circuit uses voltage sources exclusively, or even a very large proportion of voltage sources, an alternate technique called mesh analysis may be a better choice than using numerous conversions. Mesh analysis will be detailed later in this chapter.

A final item to consider is to simplify resistor networks in order to reduce the number of nodes. Fewer nodes means fewer equations and a quicker solution. For example, a portion of a network might consist of two parallel resistors which are in series with a third resistor. Ordinarily, the common junction of these three resistors would constitute a current summing node and an equation would need to be derived for it. It may be easier to simply replace the trio with a single resistor that equals the series-parallel combination value. This would remove the node and simplify creating the system of equations, but not alter the remainder of the circuit.

Supernode

On occasion you may come across a circuit like the one shown in Figure 7.2.11 that has a voltage source without a series resistance associated with it. Without that resistance, it becomes impossible to create an expression for the current passing through the source using the general method, and impossible to convert the voltage source into a current source in order to use the inspection method. One possible way out of this quandary is to simply add a very small resistor in series with it so that a source conversion is possible. The resistor in question would have to be much smaller than any surrounding resistors in order to have minimal impact on the results. A reduction by two orders of magnitude would generally yield a variation smaller than that produced by resistor tolerances in all but high precision circuits. The other way out is to use a supernode.

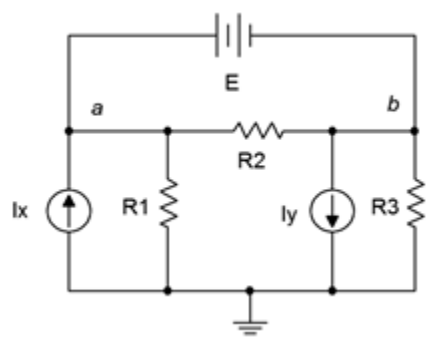

Figure 7.2.11 : Circuit for supernode analysis.

A supernode is, in effect, the combination of two nodes. It relies on a simple observation. If we examine the circuit of Figure 7.2.11 , the path of the voltage source produces identical currents flowing into and out of nodes a and b. As a consequence, if we treat the two nodes as one big node, then when we write a KCL summation, these two terms will cancel. To see just how this works,

refer to Figure 7.2.12 .

In this version we have replaced the voltage source with its ideal internal resistance, a short. We have also labeled the two nodes of interest, a and b, and labeled the currents, drawn with convenient directions.

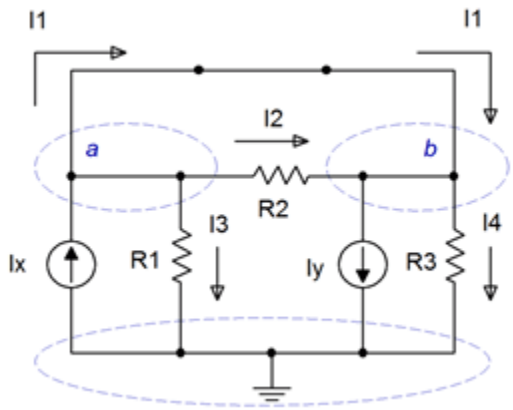

Figure 7.2.12 : Circuit modified for supernode analysis.

Due to the shorted voltage source, nodes a and b are now the same node. Consider the currents entering and exiting this combined or “super” node. On the left side (formerly node a) we see a constant current I_x entering while I_1, I_2 and I_3 are exiting. On the right side (formerly node b) we see I_y exiting along with I_4, and entering we see I_1 and I_2. Now let's set up the entering currents on the left side of the equals sign with the exiting currents on the right:

$$\sum I_{in} = \sum I_{out}$$

$$I_x + I_1 + I_2 = I_y + I_1 + I_2 + I_3 + I_4$$

This can be simplified to:

$$I_x - I_y = I_3 + I_4$$

Writing this in terms of Ohm's law we have:

$$I_x - I_y = \frac{1}{R_1}V_a + \frac{1}{R_3}V_b$$

We also know that $V_a - V_b = E$ from the original circuit. Assuming all sources and resistors are known, that makes two equations with two unknowns, solvable using simultaneous equation techniques. This is illustrated in the following example.

Example 7.2.4

Find V_a and V_b for the circuit of Figure 7.2.13 .

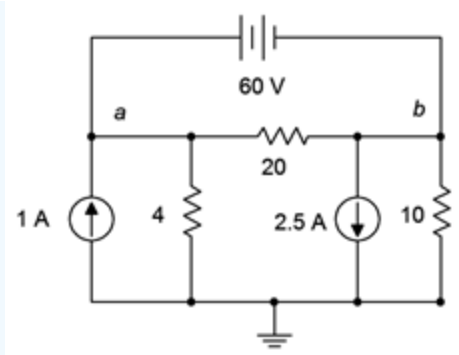

Figure 7.2.13 : Circuit for Example 7.2.4 .

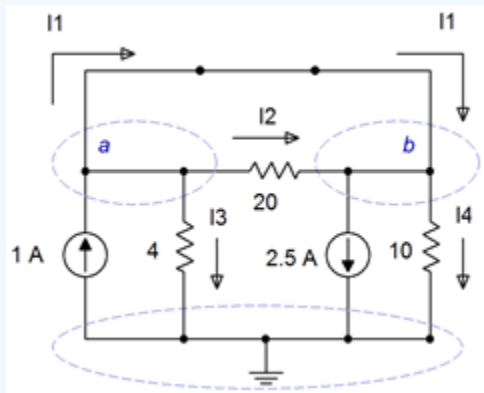

Figure 7.2.14 : Circuit modified for supernode analysis.

As shown in Figure 7.2.14 , we short the 60 volt source and write a current summation at the a b supernode:

$$\sum I_{in} = \sum I_{out}$$

$$1A + I_1 + I_2 = 2.5A + I_1 + I_2 + I_3 + I_4$$

This can be simplified to:

$$-1.5A = I_3 + I_4$$

Writing this in terms of Ohm's law we have:

$$-1.5A = \frac{1}{4\Omega}V_a + \frac{1}{10\Omega}V_b$$

$$-1.5A = 0.25SV_a + 0.1SV_b$$

We also know that $V_a - V_b = 60$ volts. Therefore $V_b = V_a - 60$ volts. Substituting this into the prior equation yields:

$$-1.5A = 0.25SV_a + 0.1S(V_a - 60V)$$

$$-1.5A = 0.25SV_a + 0.1SV_a - 6A$$

$$4.5A = 0.35SV_a$$

$$V_a = 12.857V$$

We know that V_b is 60 volts below V_a, so $V_b = -47.143$ volts.

To verify, we will perform a KCL summation at each node. For node a, assuming I_1 exits as drawn:

$$I_1 = 1A - \frac{V_a}{4\Omega} - \frac{V_a - V_b}{20\Omega}$$

$$I_1 = 1A - \frac{12.857V}{4\Omega} - \frac{12.857V - (-47.143V)}{20\Omega}$$

$$I_1 = -5.2143A \text{ (negative exit means it's entering)}$$

Doing likewise for node b, and assuming I_1 enters as drawn:

$$I_1 = 2.5A + \frac{V_b}{10\Omega} - \frac{V_a - V_b}{20\Omega}$$

$$I_1 = 2.5A + \frac{-47.143V}{10\Omega} - \frac{12.857V - (-47.143V)}{20\Omega}$$

$$I_1 = -5.2143A \text{ (negative enter means it's exiting)}$$

These currents match meaning that the current through the voltage source is verified to be the same at both terminals, as it must be.

An alternative to the basic supernode technique is to simply describe one node voltage in terms of another at the outset. This is illustrated in the example following.

Example 7.2.5

Find V_a, V_b and V_c for the circuit of Figure 7.2.15 .

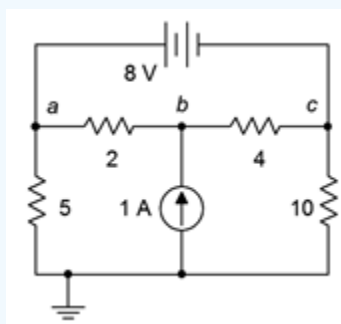

Figure 7.2.15 : Circuit for Example 7.2.5 .

Once again we have a situation of a voltage source without a series resistance. Without having to short it and thus treating nodes a and c as an explicit supernode, we can instead note by observation that the currents entering and exiting the voltage source must be identical.

The circuit is redrawn in Figure 7.2.16 with currents labeled and using equivalent conductances in place of the resistances. This time the voltage source is left in.

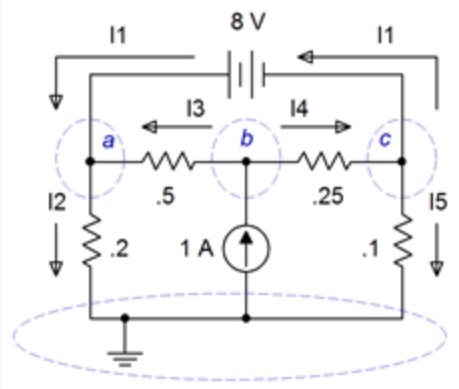

Figure 7.2.16 : Circuit of Example 7.2.5 with currents labeled and using conductances.

We start with the observation that $V_c = V_a - 8$ V. In other words, V_c is locked to V_a and if we find one of them, we can determine the other. Therefore, instead of writing equations using three nodes, we shall instead refer to node c in reference to node a, that is we shall write V_a – 8 V wherever we need V_c. Thus, this three node circuit will only need two equations.

We begin at node a and apply KCL as usual.

$$\sum I_{in} = \sum I_{out}$$

$$I_1 + I_3 = I_2$$

This is expanded using Ohm's law and we solve for I_1:

$$I_1 = I_2 - I3$$

$$I_1 = 0.2SV_a - 0.5S(V_b - V_a)$$

$$I_1 = 0.7SV_a - 0.5SV_b$$

On to node b:

$$1A = I_3 + I_4$$

$$1A = 0.5S(V_b - V_a) + 0.25S(V_b - V_c)$$

$$1A = 0.5S(V_b - V_a) + 0.25S(V_b - (V_a - 8V))$$

$$1A = 0.5S(V_b - V_a) + 0.25S(V_b - V_a + 8V)$$

$$-1A = -0.75V_a + 0.75V_b$$

And finally node c:

$$I_4 = I_1 + I_5$$

$$I_1 = I_4 - I_5$$

$$I_1 = 0.25S(V_b - V_c) - 0.1SV_c$$

$$I_1 = 0.25S(V_b - (V_a - 8V)) - 0.1S(V_a - 8V)$$

$$I_1 = 0.25S(V_b - V_a + 8V) - 0.1S(V_a - 8V)$$

$$I_1 = -0.35V_a + 0.25V_b + 2.8A$$

The final equations for nodes a and c both equal I_1, meaning they equal each other. Thus,

$$0.7SV_a - 0.5SV_b = -0.35SV_a + 0.25SV_b + 2.8A$$

$$2.8A = 1.05SV_a - 0.75SV_b$$

The final equations are:

$$2.8A = 1.05SV_a - 0.75SV_b$$

$$-1A = -0.75SV_a + 0.75SV_b$$

The solution is $V_a = 6$ volts and $Vb \approx 4.6667$ volts. As V_c is 8 volts less than V_a, then $V_c = -2$ volts.

Computer Simulation

In order to verify the result of Example 7.2.5 , the circuit is entered into a simulator as shown in Figure 7.2.17 .

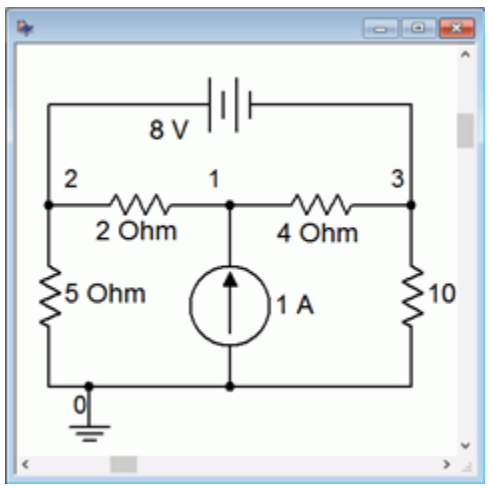

Figure 7.2.17 : Circuit of Example 7.2.5 in the simulator.

A DC operating point simulation is run. The results are shown in Figure 7.2.18 and match the calculated values perfectly. Node 1 corresponds to V_b, node 2 corresponds to V_a and node 3 corresponds to V_c.

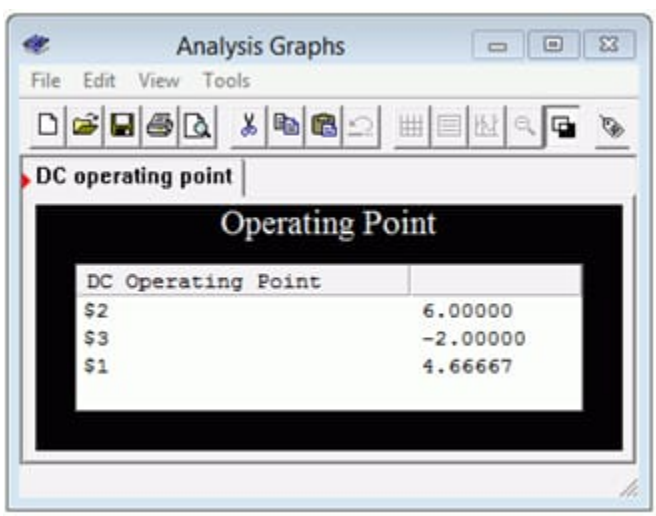

Figure 7.2.18 : Simulation results for the circuit of Example 7.2.5 .

This page titled 7.2: Nodal Analysis is shared under a CC BY-NC-SA 4.0 license and was authored, remixed, and/or curated by James M. Fiore via source content that was edited to the style and standards of the LibreTexts platform.

7.3: Mesh Analysis

In some respects mesh analysis is a mirror of nodal analysis. While nodal analysis leverages KCL to create a series of node equations that are used to solve for node voltages, mesh analysis uses KVL to create a series of loop equations that can be solved for mesh currents. A mesh current should not be confused with a branch current. While branch currents represent the current flowing through a particular component, mesh currents combine to create branch currents. That is, the current through any particular component may be an individual mesh current or a combination of two mesh currents. Circuits using complex series-parallel arrangement with multiple voltage and/or current sources may be solved using this technique. It is, however, limited to planar circuits. Planar circuits are those that can be drawn on a flat plane without having any of their wires cross. In essence, these circuits can be drawn so that they appear like a series of window panes. Non-planar circuits may be 3D in appearance and in such a circuit it becomes impossible to define the loop equations as any given component might have more than two meshing currents.

General Method

Consider the circuit of Figure 7.3.1 . We begin by designating a series of loops. These loops should be minimal in size and cover all components at least once. By convention, the loops are drawn clockwise. There is nothing magic about them being clockwise, it is just a matter of consistency. The current path along a loop is referred to as a mesh current. In the circuit of Figure 7.3.1 we have two loops, and thus, two mesh currents, I_1 and I_2. Note that all components exist in at least one loop (and sometimes in more than one loop, like R_3). Depending on circuit values, one or more of these loop's directions may in fact be opposite of reality. This is not a problem. If this is the case, the currents will show up as negative values, and thus we know that they're really flowing counter-clockwise.

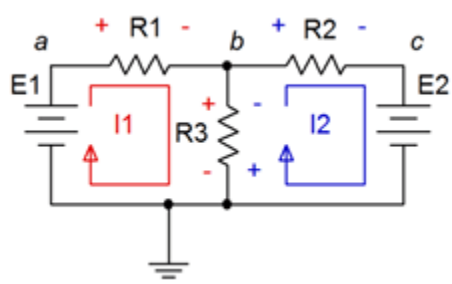

Figure 7.3.1 : Circuit for mesh analysis.

We begin by writing KVL equations for each loop.

$$\text{Loop 1: } E_1 = \text{ voltage across } R_1 + \text{ voltage across } R_3$$

$$\text{Loop 2: } -E_2 = \text{ voltage across } R_2 + \text{ voltage across } R_3$$

$$(E_2 \text{ is negative as } I_2 \text{ is drawn flowing out of its negative terminal.})$$

Expand the voltage terms using Ohm's law.

$$\text{Loop 1: } E_1 = I_1 \cdot R_1 + (I_1 - I_2)R_3$$

$$\text{Loop 2: } -E_2 = I_2 \cdot R_2 + (I_2 - I_1)R_3$$

Expanding and collecting terms yields:

$$\text{Loop 1: } E_1 = (R_1 + R_3)I_1 - R_3 \cdot I_2$$

$$\text{Loop 2: } : -E_2 = R_3 \cdot I_1 + (R_2 + R_3)I_2$$

Assuming that the resistor values and source voltages are known, we have two equations with two unknowns. These can be solved

for I_1 and I_2 using simultaneous equation solution techniques such as determinants or Gauss-Jordan elimination.

Example 7.3.1

Find V_b and V_{bc} for the circuit of Figure 7.3.2 .

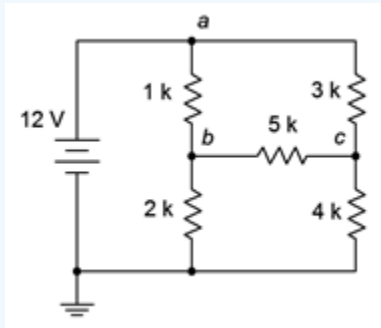

Figure 7.3.2 : Circuit for Example 7.3.1 .

The first step is to define a set of clockwise loops that are of minimum size and which cover all components. These loops are drawn in Figure 7.3.3 . Also, the polarities of the voltage drops produced by these currents are drawn next to the components in the same color for easy identification. Note that some components see only one current, such as the 3 kΩ resistor that sees only I_2; and some see two currents in opposing directions, such the 5 kΩ resistor that sees both I_2 and I_3. With multiple current directions flowing through a single component, obeying the resulting voltage polarities becomes very important.

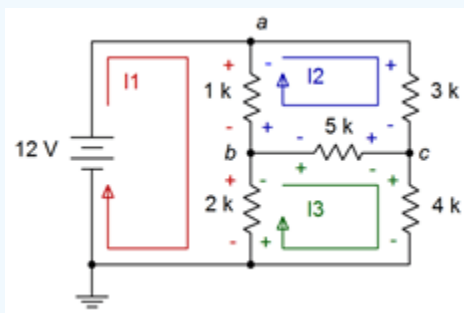

Figure 7.3.3 : Circuit of Example 7.3.1 with current loops and polarities added.

We now write KVL summations around each loop. If the current passing through a component sees a polarity of + to − then this is counted as a voltage drop while the reverse counts as a voltage rise. This is true even for voltage sources (i.e., a voltage source may appear negative in one loop and positive in another).

$$\sum V_{rises} = \sum V_{drops}$$

$$\text{Loop 1: } 12V = V_{1k} + V_{2k}$$

$$\text{Loop 2: } 0V = V_{3k} + V_{5k} + V_{1k}$$

$$\text{Loop 3: } 0V = V_{5k} + V_{4k} + V_{2k}$$

These are expanded using Ohm's law. The current for the loop under consideration is deemed positive while any opposing (i.e., meshing) current is deemed negative:

$$\text{Loop 1: } 12V = 1k(I_1 - I_2) + 2k(I_1 - I_2)$$

$$\text{Loop 2: } 0V = 3k(I_2) + 5k(I_2 - I_3) + 1k(I_2 - I_1)$$

$$\text{Loop 3: } 0V = 5k(I_3 - I_2) + 4k(I_3) + 2k(I_3 - I_1)$$

The terms are expanded:

$$\text{Loop 1: } 12V = 1kI_1 - 1kI_2 + 2kI_1 - 2kI_3$$

$$\text{Loop 2: } 0V = 3kI_2 + 5kI_2 - 5kI_3 + 1kI_2 - 1kI_1$$

$$\text{Loop 3: } 0V = 5kI_3 - 5kI_2 + 4kI_3 + 2kI_3 - 2kI_1$$

Like terms are grouped, once again creating aligned columns for the current coefficients:

$$\text{Loop 1: } 12V = (1k + 2k)I_1 - 1kI_2 - 2kI_3$$

$$\text{Loop 2: } 0V = -1kI_1 + (3k + 5k + 1k)I_2 - 5kI_3$$

$$\text{Loop 3: } 0V = -2kI_1 - 5kI_2 + (5k + 4k + 2k)I_3$$

Which simplifies to:

$$\text{Loop 1: } 12V = 3kI_1 - 1kI_2 - 2kI_3$$

$$\text{Loop 2: } 0V = -1kI_1 + 9kI_2 - 5kI_3$$

$$\text{Loop 3: } 0V = -2kI_1 - 5kI_2 + 11kI_3$$

Note that we have diagonal symmetry. The solution is I_1 = 5.729 mA, I_2 = 1.6258 mA and I_3 = 1.7806 mA. To find V_b we need to find the net current through the 2 kΩ resistor. That's $I_1 - I_3$, or 5.729 mA – 1.7806 mA, which is 3.9484 mA. When multiplied by 2 kΩ we find V_b = 7.8968 volts. Similarly, $V_{bc} = (I_3 - I_2)$ 5 kΩ = (1.7806 mA – 1.6258 mA) 5 kΩ, or 774 mV.

Computer Simulation

In order to verify the results of the analysis, the circuit is entered into a simulator and a virtual voltmeter is placed across the 5 k Ω resistor. This is shown in Figure 7.3.4 . The results agree nicely with the original analysis.

As nice as this is, in a practical circuit we need to be concerned about the effects of component tolerance. It would be extraordinarily odd if during production each resistor was equal to precisely the nominal value specified. In reality, each resistor will have a stated tolerance. Thus, with all five resistors changing slightly from unit to unit, we should expect the currents and voltages to vary as well. The question is, what would be a typical spread? This can be addressed via a Monte Carlo analysis. This analysis is, in fact, a series of simulations. Each simulation uses randomized component values that fall within the stated tolerance spread. For example, if we specify that the 1 kΩ resistor has a 5% tolerance, then the actual resistor used for a simulation will be a randomly generated value between 950 Ω and 1050 Ω. We then state how many trials we'd like, each one using their own unique randomized values for each component.

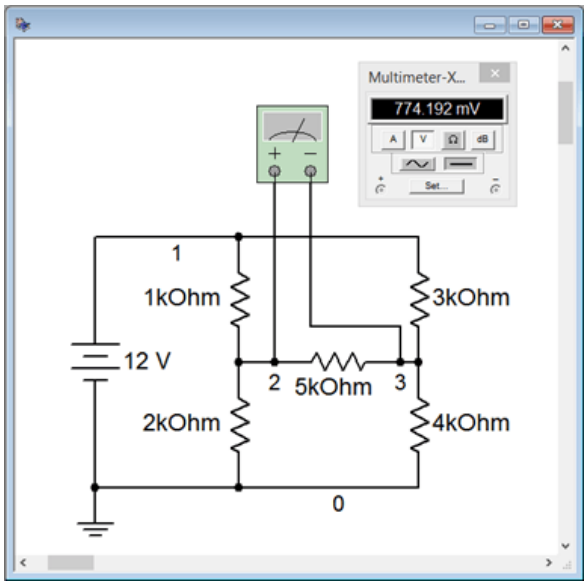

Figure 7.3.4 : Circuit of Figure 7.3.2 in a simulator with a virtual voltmeter.

The results of a Monte Carlo analysis using the DC operating point simulation is shown in Figure 7.3.5 . Ten randomized trials were generated for the value of V_b. Each of the five resistors was assigned a tolerance of 5%. As can be seen, voltage values both above and below the nominal simulation can result.

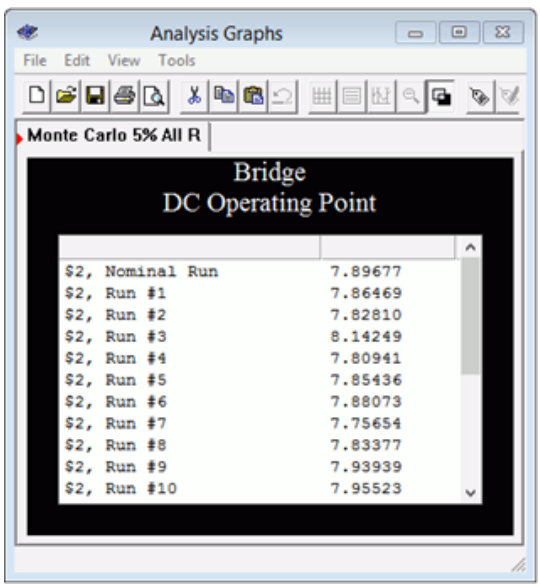

Figure 7.3.5 : Monte Carlo analysis results for the circuit of Figure 7.3.2 .

Inspection Method

Like nodal analysis, there is a method to generate the equations by inspection. Simply focus on one loop, which we'll call the loop under inspection, and ask the following questions: what is the total source voltage in this loop? This yields the voltage constant for the equation. Then sum all of the resistance values in the loop under inspection. This yields the coefficient for that current term. For the remaining current coefficients in this equation, sum the resistances that are in common between the loop under inspection and the other loops, respectively. These values will always be negative. Repeat this process for all loops, with each loop in turn becoming the loop under inspection. As was the case with nodal analysis, the set of equations produced must exhibit diagonal symmetry, that is, if a diagonal is drawn from the upper left to the lower right through the I_R pairs, then the coefficients found above the diagonal will have to match those found below the diagonal.

While it is possible to extend this technique to include current sources, it is often easier and less error-prone to convert the current sources into voltage sources and continue with the direct inspection method outlined above. Either way, it is important to remember that the number of loops determines the number of equations to be solved.

Example 7.3.2

Find V_c for the circuit of Figure 7.3.6 .

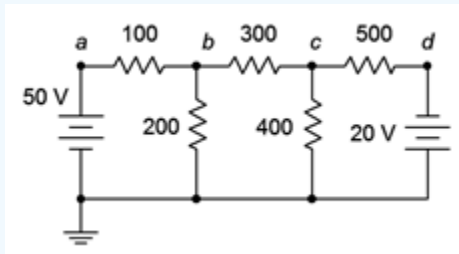

Figure 7.3.6 : Circuit for Example 7.3.2 .

First, we'll label the loops, as shown in Figure 7.3.7 .

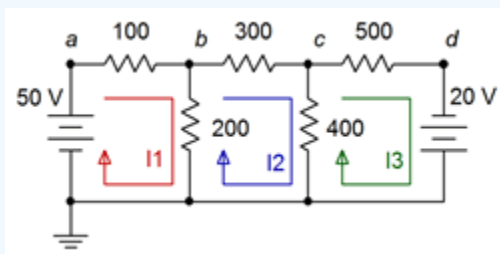

Figure 7.3.7 : Circuit of Example 7.3.2 with current loops identified.

Now, beginning with loop 1, sum all of the voltage sources in this loop. That's +50 volts. Secondly, sum all of the resistors in this loop. That's 100 Ω + 200 Ω, or 300 Ω. This is the coefficient for the I_1 term. The coefficient for the I_2 term is the sum of all resistances that are in common between loops 1 and 2. That's just the 200 Ω resistor. The coefficient for the I_3 term would be the sum of all resistances that are in common between loop 1 and loop 3. In this circuit, there aren't any so the coefficient is zero. The first equation is:

$$\text{Loop 1: } 50V = 300I_1 - 200I_2 - 0I_3$$

Repeat the process for loops 2 and 3:

$$\text{Loop 2: } 0V = -200I_1 + 900I_2 - 400I_3$$

$$\text{Loop 3: } 20V = -0I_1 - 400I_2 + 900I_3$$

Note that the 20 volt source shows up positive because of the direction of I_3 (into the negative terminal and out of the positive terminal).

As required, we have diagonal symmetry. The solution is I_1 = 214.47 mA, I_2 = 71.698 mA and I_3 = 54.088 mA. V_c is the net current through the 400 Ω resistor times 400 Ω. The net current is $I_2 - I_3$, or 71.698 mA – 54.088 mA, which is 17.61 mA. When multiplied by 400 Ω we find V_b = 7.044 volts. Note that we use $I_2 - I_3$ and not $I_3 - I_2$. The reason is because we are trying to find the voltage from node c to ground, and I_2 is the current flowing in that direction. In contrast, using $I_3 - I_2$ would yield the voltage from ground to node c; the same magnitude but opposite sign.

As a crosscheck, KVL states that $V_c + V_{500}$ has to equal the –20 volt source. The drop across the 500 Ω is 54.088 mA times 500 Ω, or 27.044 volts from left to right. Starting at node c of 7.044 volts and then dropping 27.044 volts yields – 20 volts as expected.

Supermesh

Sometimes you may run across a current source which has no associated internal resistance, such as found in the circuit of Figure 7.3.8 . This is similar to the situation seen previously under nodal analysis where a voltage source does not have a specified internal resistance. There are two ways of solving this predicament. The first is add a very large resistance in parallel with the current source and then perform a source conversion on the pair so that the inspection method of mesh can be followed. The larger the value of this resistor, the more accuracy that is obtained. As a general rule it should be, at minimum, at least a couple of orders of magnitude larger than any surrounding resistor, and preferably larger. The second method is to use supermesh. A supermesh is a larger mesh loop than contains other mesh loops inside of it.

Consider the circuit shown in Figure 7.3.8 . In the center we have a current source, I_s, which lacks an associated internal resistance. Two traditional mesh loops, I_1 and I_2, are labeled as usual. The problem here is that we cannot use an Ohm's law based IR voltage drop for V_b. We have no way to express this as the voltage across I_s is an unknown. On the other hand, what we do know is that I_s must equal the combination of the traditional mesh currents I_1 and I_2. That is, from the perspective of the first loop, $I_s = I_1 - I_2$. Remember, one or both of the mesh currents could be negative, and thus rotating counterclockwise.

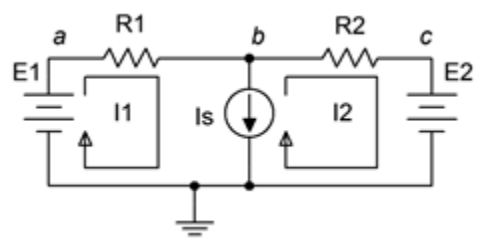

Figure 7.3.8 : Circuit for supermesh.

At this point we invoke the idea of a supermesh loop. First, we replace the offending current source with its ideal internal resistance (an open). The supermesh loop is drawn which encompasses the original two loops. This is shown in Figure 7.3.9 . The supermesh loop is drawn in red and labeled.

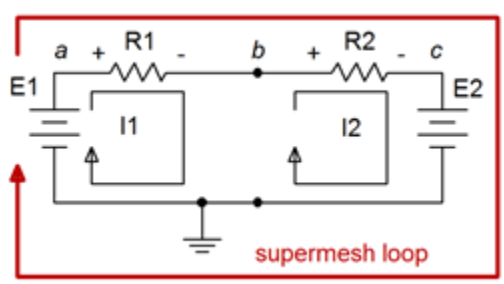

Figure 7.3.9 : Supermesh labeled.

We now perform a KVL summation around the supermesh loop, similar to what we have done previously. The difference this time is that we need to recognize that components each see one of the original mesh currents; namely I_1 or I_2 in this case. We do not solve for a supermesh current, we simply use the supermesh to define the loop for the KVL summation. The summation follows:

$$\sum V_{rises} = \sum V_{drops}$$

$$E_1 = V_{R1} + V_{R2} + E_2$$

The voltage drops across the resistors can be expanded using Ohm's law, using the original mesh current associated with each resistor.

$$E_1 - E_2 = I_1 R_1 + I_2 R_2$$

By inspection,

$$I_s = I_1 - I_2 \text{ or}$$

$$I_2 = I_1 - I_s$$

We now have two equations with two unknowns and can solve for I_1 and I_2. This procedure is illustrated in the following example.

Example 7.3.3

Find V_b for the circuit of Figure 7.3.10 .

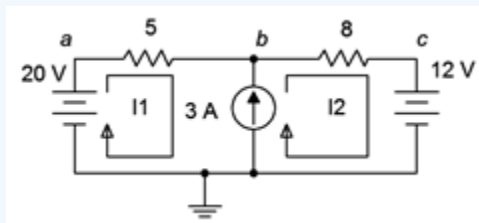

Figure 7.3.10 : Circuit for Example 7.3.3 .

First, we'll label the loops, as shown in Figure 7.3.11 .

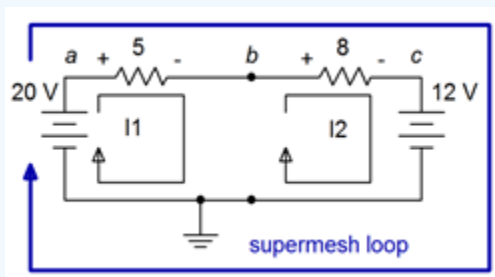

Figure 7.3.11 : Circuit of Figure 7.3.10 with supermesh labeled.

Next, we'll perform a KVL summation around the supermesh loop.

$$\sum V_{rises} = \sum V_{drops}$$

$$20V = V_{R1} + V_{R2} + 12V$$

Expand using Ohm's law and rearrange:

$$20V - 12V = 5\Omega I_1 + 8\Omega I_2$$

$$8V = 5\Omega I_1 + 8\Omega I_2$$

By inspection we know

$$3A = I_2 - I_1 \text{ or}$$

$$I_2 = I_1 + 3A$$

We can substitute this expression into the prior supermesh expression and solve for I1:

$$8V = 5\Omega I_1 + 8\Omega I_2$$

$$8V = 5\Omega I_1 + 8\Omega(I_1 + 3A)$$

$$8V = 5\Omega I_1 + 8\Omega I_1 + 24V$$

$$-16V = 13\Omega I_1$$

$$I_1 \approx -1.231A$$

Thus, I_2 = –1.231 A + 3 A, or 1.769 A. To determine V_b we simply subtract the drop across the 5 Ω resistor from the 20 volt source.

$$V_b = 20V - I_1 5\Omega$$

$$V_b = 20V - (-1.231A)5\Omega$$

$$V_b \approx 26.15V$$

As a crosscheck, we could also add the voltage across the 8 Ω resistor to the 12 volt source:

$$V_b = 12V + I_2 8\Omega$$

$$V_b = 12V + 1.769A8\Omega$$

$$V_b \approx 26.15V$$

Comparison of Nodal and Mesh

Compared to nodal analysis, mesh analysis has the advantage of dealing with resistances rather than conductances when writing the system of equations. Further, the mesh inspection method works with voltage sources which tends to be convenient for many circuits, while the nodal inspection method requires current sources. On the down side, the resulting set of mesh currents requires further processing in order to find either branch currents or node voltages, while nodal analysis produces node voltages directly with no further processing. Mesh also has the disadvantage of being limited to planar circuits while there are no such limits to nodal.

This page titled 7.3: Mesh Analysis is shared under a CC BY-NC-SA 4.0 license and was authored, remixed, and/or curated by James M. Fiore via source content that was edited to the style and standards of the LibreTexts platform.

7.4: Dependent Sources

A dependent source is a current or voltage source whose value is not fixed (i.e., independent) but rather which depends on some other circuit current or voltage. The general form for the value of a dependent source is $Y = kX$ where X and Y are currents and/or voltages and k is the proportionality factor. For example, the value of a dependent voltage source may be a function of a current, so instead of the source being equal to, say, 10 volts, it could be equal to twenty times the current passing through a particular resistor, or $V = 20I$.

There are four possible dependent sources: the voltage-controlled voltage source (VCVS), the current-controlled voltage source (CCVS), the voltage-controlled current source (VCCS), and the current-controlled current source (CCCS). The source and control parameters are the same for both the VCVS and the CCCS so k is unitless (although it may be given as volts/volt and amps/amp, respectively). For the VCCS and CCVS, k has units of amps/volt and volts/amp, respectively. These are referred to as the transresistance and transconductance of the sources with units of ohms and siemens.

The schematic symbols for dependent or controlled sources are usually drawn using a diamond. Also, there may be a secondary connection for the controlling current or voltage. Examples of a voltage-controlled voltage source, current-controlled voltage source, voltage-controlled current source and a current-controlled current source are shown in Figure 7.4.1 , left-to-right. On each of these symbols, the control element is shown to the left of the source. This portion is not always drawn on a schematic. Instead, the source simply may be labeled as a function, for example, $V = 0.02I_X$ where I_X is the controlling current.

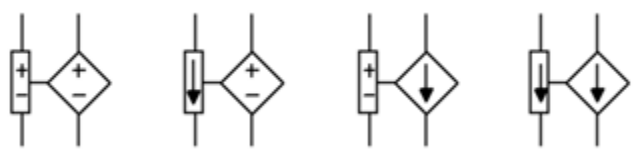

Figure 7.4.1 : Dependent sources (L to R): VCVS, CCVS, VCCS, CCCS.

Dependent sources are not “off-the-shelf” items in the same way that a battery is. Rather, dependent sources usually are used to model the behavior of more complex devices. For example, a bipolar junction transistor commonly is modeled as a CCCS while a field effect transistor may be modeled as a VCCS[1]. Similarly, many op amp circuits are modeled as VCVS systems. Solutions for circuits using dependent sources follow along the lines of those established for independent sources (i.e., the application of Ohm's law, KVL, KCL, etc.), however, the sources are now dependent on the remainder of the circuit which tends to complicate the analysis.

In general, there are two possible configurations: isolated and coupled. A example of the isolated form is shown in Figure 7.4.2 .

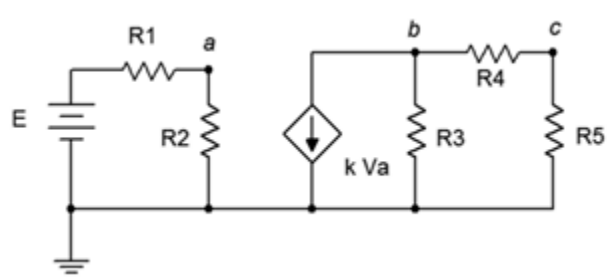

Figure 7.4.2 : Dependent source: isolated configuration.

In this configuration, the dependent source (center) does not interact with the subcircuit on the left driven by the independent source, thus it can be analyzed as two separate circuits. Solutions for this form are relatively straightforward in that the control value for the dependent source can be computed directly. This value is then substituted into the dependent source and the analysis continues as is usual. Sometimes it is convenient if the solution for a particular voltage or current is defined in terms of the control parameter rather than as a specific value (e.g., the voltage across a particular resistor might be expressed as 8 V_A instead of 12 volts, where V_A is 1.5 volts).

The second type of circuit (coupled) is somewhat more complex in that the dependent source can affect the parameter that controls the dependent source. In other words, the dependent source(s) will contribute terms that include the controlling parameter(s), thus partly controlling itself. Some additional effort will be in order to solve these circuits. To illustrate, consider the circuit of Figure 7.4.3 .

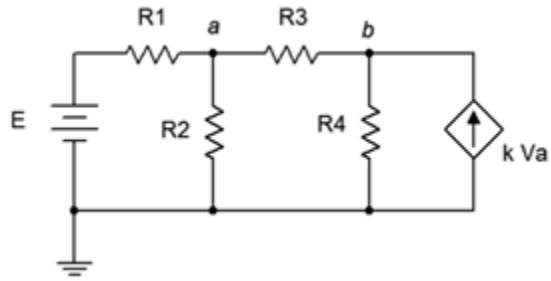

Figure 7.4.3 : Dependent source: coupled configuration.

In this example it should be obvious that the current from the dependent source can affect the voltage at node a, and it is this very voltage that in turn sets up the value of the current source. Circuits of this type can be analyzed using mesh or nodal analysis. Nodal analysis works well here and is illustrated following.

We begin by defining current directions. Assume that the currents through R_1 and R_3 are flowing into node a, the current through R_2 is flowing out of node a, and the current through R_4 is flowing out of node b. We shall number the branch currents to reflect the associated resistor. The resulting KCL equations are:

$$\sum I_{in} = \sum I_{out}$$

$$\text{Node } a : I_1 + I_3 = I_2$$

$$\text{Node } b : kV_a = I_3 + I_4$$

The currents are then described by their Ohm's law equivalents:

$$\text{Node } a : \frac{E - V_a}{R_1} + \frac{V_b - V_a}{R_3} = \frac{V_a}{R_2}$$

$$\text{Node } b : kV_a = \frac{V_b - V_a}{R_2} + \frac{V_b}{R_4}$$

Expanding terms yields:

$$\text{Node } a : \frac{E}{R_1} - \frac{V_a}{R_1} + \frac{V_b}{R_3} - \frac{V_a}{R_3} = \frac{V_a}{R_2}$$

$$\text{Node } b : kV_a = \frac{V_b}{R_2} - \frac{V_a}{R_2} + \frac{V_b}{R_4}$$

Collecting terms and simplifying yields:

$$\text{Node } a : \frac{E}{R_1} = \left(\frac{1}{R_1} + \frac{1}{R_2} + \frac{1}{R_3}\right) V_a - \frac{1}{R_3} V_b$$

$$\text{Node } b : 0 = -\left(k + \frac{1}{R_2}\right) V_a + \left(\frac{1}{R_2} + \frac{1}{R_4}\right) V_b$$

Values for the resistors, k, and E normally are known, so the analysis proceeds directly.

Also, it is worth remembering that it is possible to perform source conversions on dependent sources, within limits. The same procedure is followed as for independent sources. The new source will remain a dependent source (e.g., converting VCVS to VCCS). This process is not applicable if the control parameter directly involves the internal impedance (i.e., is its voltage or current).

Time for an example, this one utilizing a simplified model of a transistor amplifier.

Example 7.4.1

Find V_b and V_c for the circuit of Figure 7.4.4 .

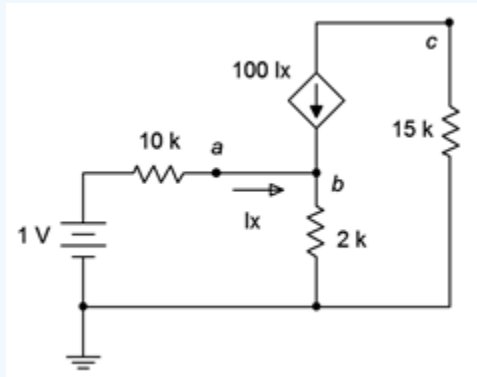

Figure 7.4.4 : Circuit for Example 7.4.1 .

This CCCS would be typical of a simple model of a bipolar junction transistor (nodes a, b, and c). Ideally, the output voltage, V_c, would be equal to the input voltage (1 V) times the resistor ratio of 15 kΩ / 2 kΩ and inverted, or approximately –7.5 volts. In reality, it usually comes up a little short of this. Let's see how well this works out.

This circuit is a good candidate for nodal analysis using the general method. Note that the points labeled a and b are the same node so we can write just two KCL summations. Using the current directions as draw on the schematic, for node b we have:

$$\sum I_{in} = \sum I_{out}$$

$$I_x + 100I_x = \frac{V_b}{2k\Omega}$$

$$101\frac{1V - V_b}{10k\Omega} = \frac{V_b}{2k\Omega}$$

$$10.1mA = \left(\frac{1}{2k\Omega} + \frac{101}{10k\Omega}\right)V_b$$

$$10.1mA = 10.6mSV_b$$

$$V_b = 0.95283V$$

For node c we have:

$$\sum Iin = \sum Iout$$

$$-\frac{V_c}{15k\Omega} = 100I_x$$

$$-\frac{V_c}{15k\Omega} = 100\frac{1V - V_b}{10k\Omega}$$

$$V_c = -7.0755V$$

Alternately, instead of writing the second KCL summation we could have used V_b to determine I_x, i.e., $(1 - V_b)/10$ kΩ. As the current through the 15 kΩ resistor is $100I_x$, we could then use Ohm's law to find V_c. In any case, we do see that V_c is inverted and just shy of the 7.5 volt estimate.

Computer Simulation

For verification, the dependent source circuit of Example 7.4.1 is entered into a simulator as shown in Figure 7.4.5 . A DC operating point analysis is run, the results of which are shown in Figure 7.4.6 . The output voltage shows roughly –7.08 volts and a V_b of just under 1 volt, thus achieving excellent agreement with the manual calculation.

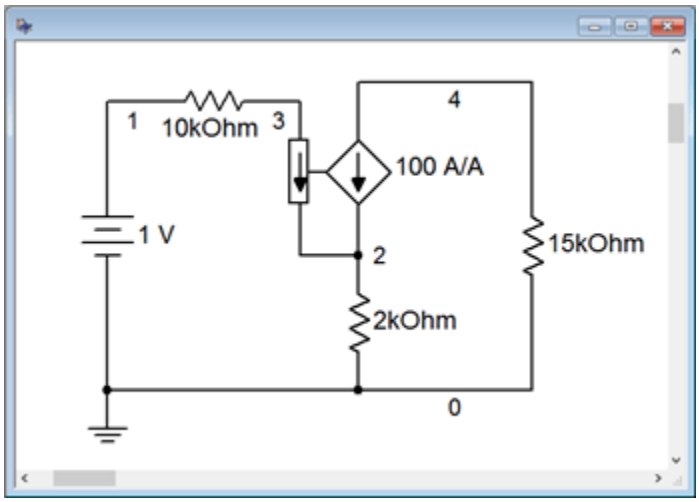

Figure 7.4.5 : Circuit of Figure 7.4.4 in a simulator.

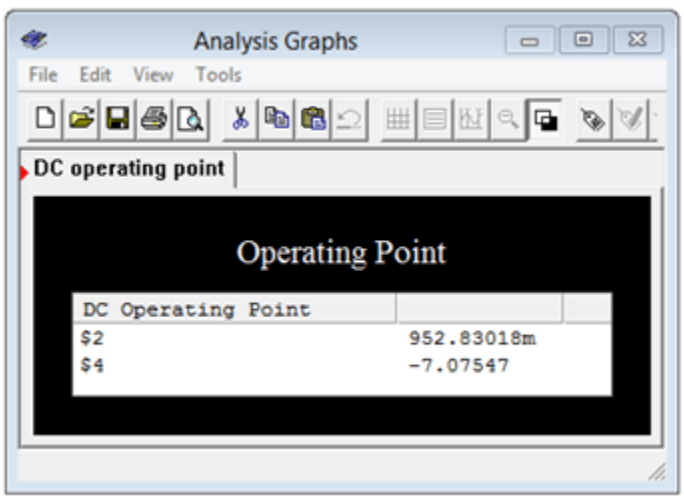

Figure 7.4.6 : Simulation results for the circuit of Figure 7.4.4 .

While this simulation is effective in this case, just using a dependent source to stand in for a transistor is rather limited. There are many other, perhaps more subtle, elements to a proper transistor model that will ensure both greater accuracy and proper results under a wide range of operating conditions. Any quality simulator will include a parts library using simulation models that are fine-tuned to particular manufacturer part numbers.

References

[1]For details, see Fiore, J.M., Semiconductor Devices: Theory and Application, and Operational Amplifiers and Linear Integrated Circuits: Theory and Application, both free OER titles.

This page titled 7.4: Dependent Sources is shared under a CC BY-NC-SA 4.0 license and was authored, remixed, and/or curated by James M. Fiore via source content that was edited to the style and standards of the LibreTexts platform.

7.5: Summary

Nodal analysis can be used to solve virtually any complex multi-source DC electrical circuit. It is based on KCL, writing expressions involving each node in the circuit. A system of equations results, there being as many equations as there are nodes in the circuit, minus the reference node (which usually is taken as ground). The set of equations will exhibit diagonal symmetry, which can be used as a crosscheck before setting out to solve them. The solution will be a complete set of node voltages. From these, any branch current may be determined as needed.

There are two different methods of creating the system of equations. The first method is deemed the general method and will work for a mix of current sources and voltage sources. Individual currents are defined based on the node voltages and any known current sources. KCL is then applied at each node, followed by simplification and combination of terms to arrive at the end equations. The second approach uses the inspection method. If the circuit contains only current sources (or if the voltage sources are converted), this method allows direct generation of the system of equations without the need for simplification and thus is less prone to error.

Mesh analysis can be used to solve any planar complex multi-source DC electrical circuit. It is based on KVL, writing expressions involving each closed loop in the circuit. The loops are minimally sized and the set of loops must cover every component in the circuit. A system of equations results, there being as many equations as there are loops. As with nodal analysis, the set of equations will exhibit diagonal symmetry. The solution will be a complete set of mesh currents. From these, any node voltage may be determined.

Like nodal, mesh offers two different methods of creating the system of equations. The general method will work for a mix of current sources and voltage sources. Individual loops are defined based on the meshing currents passing through each component. KVL is then applied around each loop, followed by simplification and combination of terms to arrive at the end equations. In contrast, if the circuit contains only voltage sources (or if the current sources are converted), then the inspection method may be used. This method allows direct generation of the system of equations and is faster and less error prone.

Dependent sources are current or voltage sources whose value depends on the current or voltage developed in some other part of the circuit. There are four types: current controlled current source, current controlled voltage source, voltage controlled current source and voltage controlled voltage source. These sources are used commonly to model the characteristics of active devices such bipolar and field effect transistors. Techniques for solution tend to be a bit more involved than when using constant sources, however, nodal analysis in particular tends to work well.

Review Questions

1. Describe the practical differences between nodal analysis and mesh analysis.

2. What is diagonal symmetry? Of what use is it?

3. What are the differences between the general method and the inspection method of nodal analysis?

4. What are the differences between the general method and the inspection method of mesh analysis?

5. What is a supernode?

6. What is a supermesh?

7. Describe the concept of dependent sources and how they differ from independent or constant sources.

This page titled 7.5: Summary is shared under a CC BY-NC-SA 4.0 license and was authored, remixed, and/or curated by James M. Fiore via source content that was edited to the style and standards of the LibreTexts platform.

7.6: Exercises

Analysis

1. Given the circuit in Figure 7.6.1 , write the mesh loop equations.

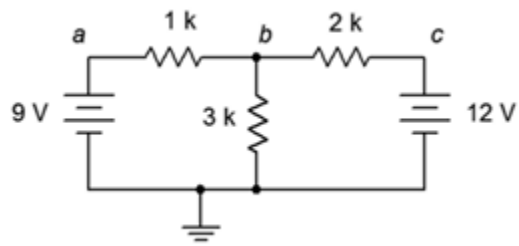

Figure 7.6.1

2. Using mesh analysis, determine the value of V_b for the circuit shown in Figure 7.6.1 .

3. For the circuit shown in Figure 7.6.1 , use mesh analysis to determine the current through the 1 kΩ resistor.

4. Given the circuit in Figure 7.6.2 , write the mesh loop equations and the associated determinants.

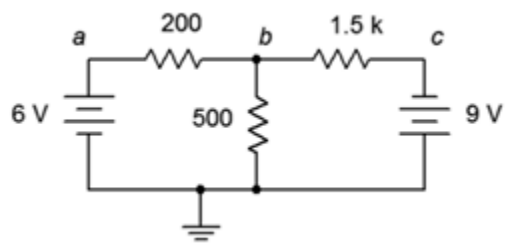

Figure 7.6.2

5. Using mesh analysis, determine the value of V_b for the circuit shown in Figure 7.6.2 .

6. For the circuit shown in Figure 7.6.2 , use mesh analysis to determine the current through the 500 Ω resistor.

7. Given the circuit in Figure 7.6.3 , write the mesh loop equations.

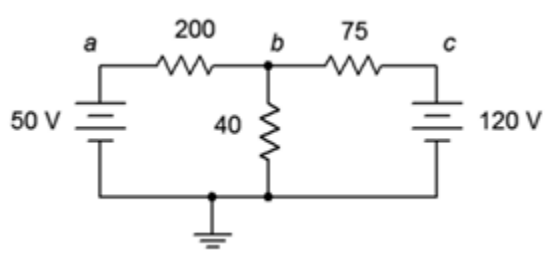

Figure 7.6.3

8. Using mesh analysis, determine the value of V_b for the circuit shown in Figure 7.6.3 .

9. For the circuit shown in Figure 7.6.3 , use mesh analysis to determine the current through the 75 Ω resistor.

10. Given the circuit in Figure 7.6.4 , write the mesh loop equations and the associated determinants.

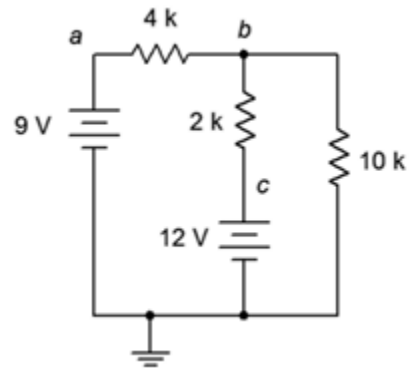

Figure 7.6.4

11. Using mesh analysis, determine the value of V_{bc} for the circuit shown in Figure 7.6.4 .

12. For the circuit shown in Figure 7.6.4 , use mesh analysis to determine the current through the 10 kΩ resistor.

13. Given the circuit in Figure 7.6.5 , write the mesh loop equations.

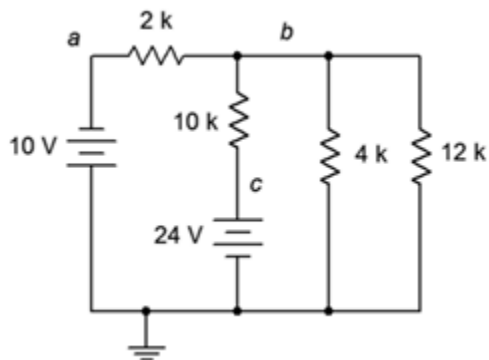

Figure 7.6.5

14. Using mesh analysis, determine the value of V_{ac} for the circuit shown in Figure 7.6.5 .

15. For the circuit shown in Figure 7.6.5 , use mesh analysis to determine the current through the 4 kΩ resistor.

16. Given the circuit in Figure 7.6.6 , write the mesh loop equations and the associated determinants.

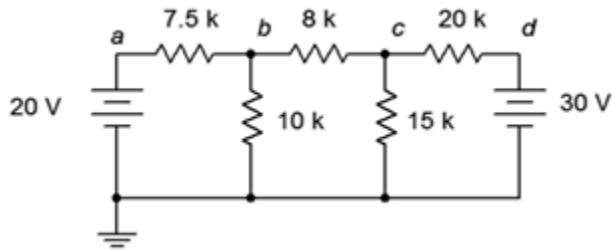

Figure 7.6.6

17. Using mesh analysis, determine the value of V_c for the circuit shown in Figure 7.6.6 .

18. For the circuit shown in Figure 7.6.6 , use mesh analysis to determine the current through the 10 kΩ resistor.

19. Given the circuit in Figure 7.6.7 , write the mesh loop equations.

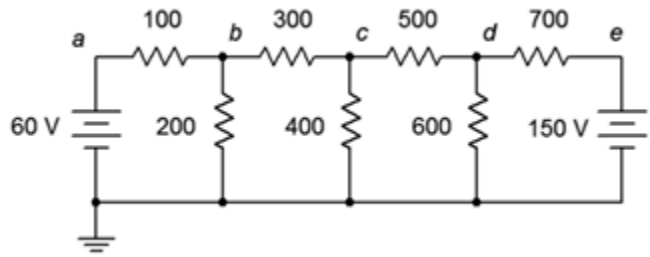

Figure 7.6.7

20. Using mesh analysis, determine the value of V_{bd} for the circuit shown in Figure 7.6.7 .

21. For the circuit shown in Figure 7.6.7 , use mesh analysis to determine the current through the 500 Ω resistor.

22. Given the circuit in Figure 7.6.8 , write the mesh loop equations.

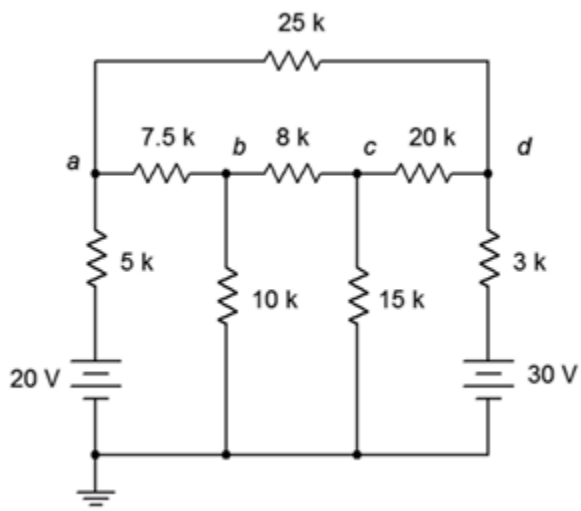

Figure 7.6.8

23. Using mesh analysis, determine the value of V_{ad} for the circuit shown in Figure 7.6.8 .

24. For the circuit shown in Figure 7.6.8 , use mesh analysis to determine the current through the 3 kΩ resistor.

25. Given the circuit in Figure 7.6.9 , write the mesh loop equations.

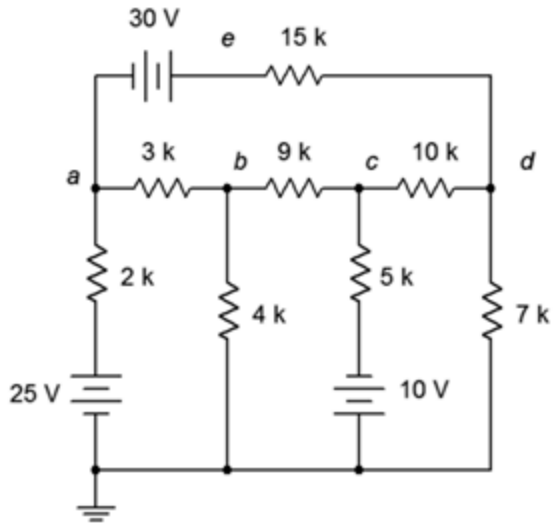

Figure 7.6.9

26. Using mesh analysis, determine the value of V_e for the circuit shown in Figure 7.6.9 .

27. For the circuit shown in Figure 7.6.9 , use mesh analysis to determine the current through the 9 kΩ resistor.

28. Given the circuit in Figure 7.6.10 , write the mesh loop equations and the associated determinants.

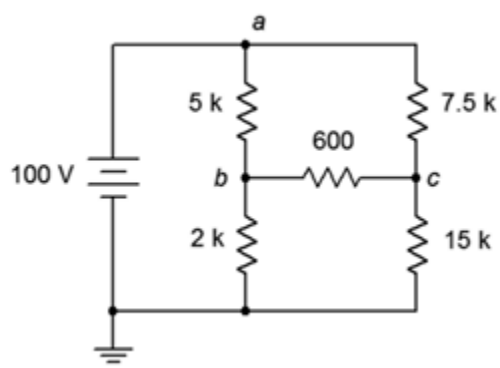

Figure 7.6.10

29. Using mesh analysis, determine the value of V_{bc} for the circuit shown in Figure 7.6.10 .

30. Given the circuit shown in Figure 7.6.10 , use mesh analysis to determine the current through the 600 Ω resistor.

31. Given the circuit in Figure 7.6.11 , write the mesh loop equations.

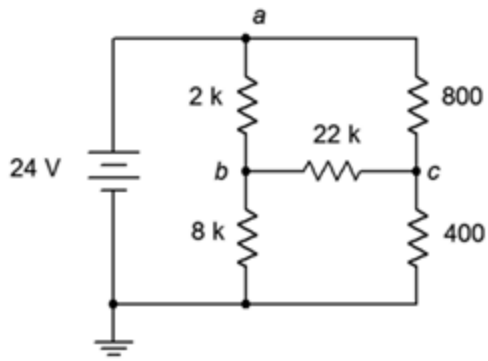

Figure 7.6.11

32. Using mesh analysis, determine the value of V_{bc} for the circuit shown in Figure 7.6.11 .

33. Given the circuit shown in Figure 7.6.11 , use mesh analysis to determine the current through the 800 Ω resistor.

34. For the circuit in Figure 7.6.12 , write the mesh loop equations.

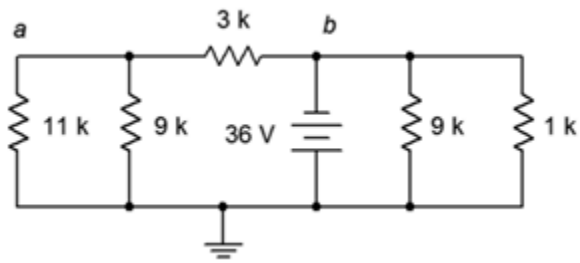

Figure 7.6.12

35. Using mesh analysis, determine the value of V_a for the circuit shown in Figure 7.6.12 .

36. For the circuit shown in Figure 7.6.12 , use mesh analysis to determine the current through the 3 kΩ resistor.

37. Given the circuit in Figure 7.6.13 , write the mesh loop equations.

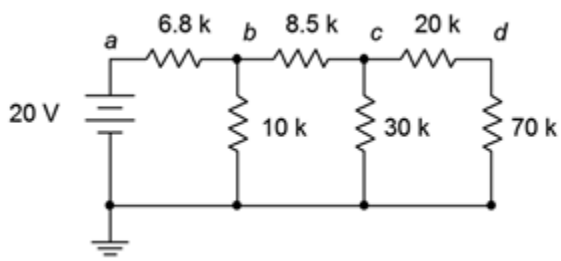

Figure 7.6.13

38. Using mesh analysis, determine the value of V_c for the circuit shown in Figure 7.6.13 .

39. For the circuit shown in Figure 7.6.13 , use mesh analysis to determine the current passing through the 8.5 kΩ resistor.

40. Given the circuit in Figure 7.6.14 , write the mesh loop equations (consider using source conversion).

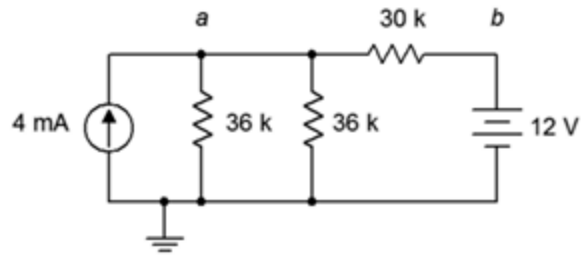

Figure 7.6.14

41. Using mesh analysis, determine the value of V_a for the circuit shown in Figure 7.6.14 .

42. For the circuit shown in Figure 7.6.14 , use mesh analysis to determine the current passing through the 30 kΩ resistor.

43. Given the circuit in Figure 7.6.15 , write the mesh loop equations (consider using source conversion).

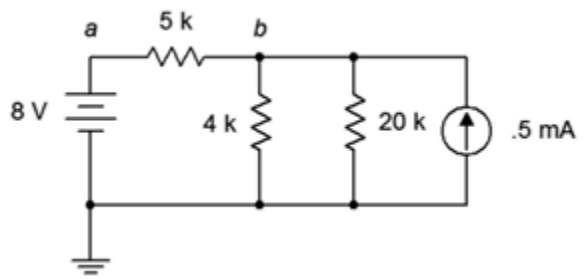

Figure 7.6.15

44. Using mesh analysis, determine the value of V_b for the circuit shown in Figure 7.6.15 .

45. For the circuit shown in Figure 7.6.15 , use mesh analysis to determine the current through the 5 kΩ resistor.

46. Given the circuit in Figure 7.6.16 , write the node equations.

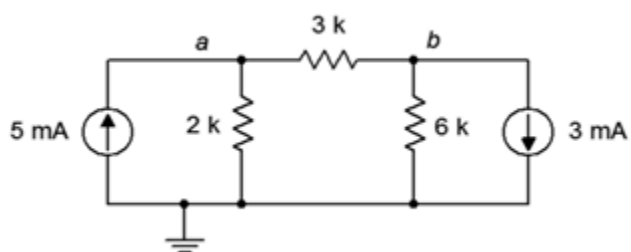

Figure 7.6.16

47. Using nodal analysis, determine the value of V_b for the circuit shown in Figure 7.6.16 .

48. For the circuit shown in Figure 7.6.16 , use nodal analysis to determine the current through the 3 kΩ resistor.

49. Given the circuit in Figure 7.6.17 , write the node equations.

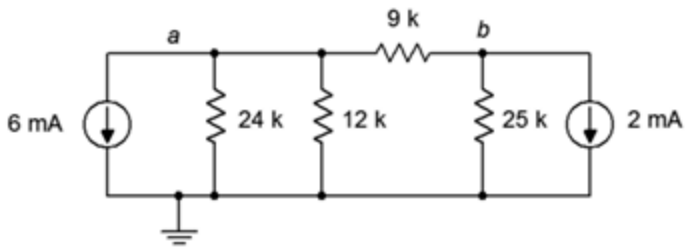

Figure 7.6.17

50. Using nodal analysis, determine the value of V_b for the circuit shown in Figure 7.6.17 .

51. For the circuit shown in Figure 7.6.17 , use nodal analysis to determine the current passing through the 12 kΩ resistor.

52. Given the circuit in Figure 7.6.18 , write the node equations.

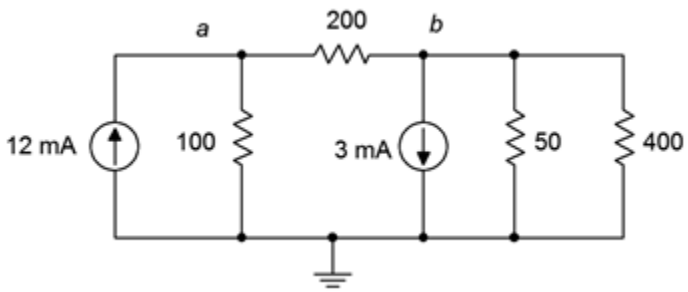

Figure 7.6.18

53. Using nodal analysis, determine the value of V_{ba} for the circuit shown in Figure 7.6.18 .

54. For the circuit shown in Figure 7.6.18 , use nodal analysis to determine the current passing through the 100 Ω resistor.

55. Given the circuit in Figure 7.6.19 , write the node equations.

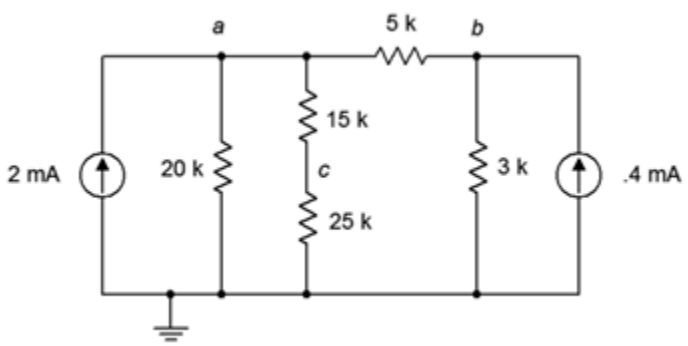

Figure 7.6.19

56. Using nodal analysis, determine the value of V_{ac} for the circuit shown in Figure 7.6.19 .

57. For the circuit shown in Figure 7.6.19 , use nodal analysis to determine the current passing through the 20 kΩ resistor.

58. Given the circuit in Figure 7.6.20 , write the node equations.

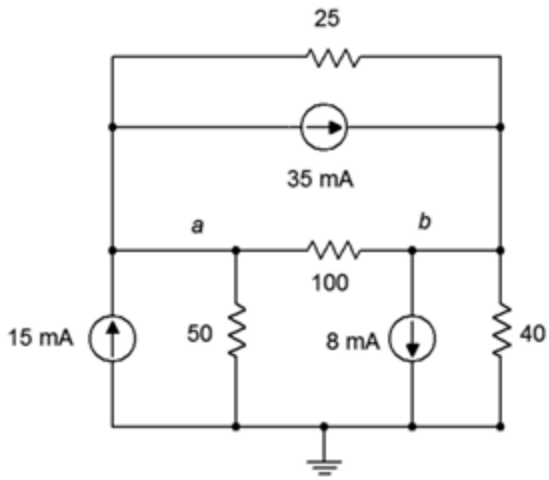

Figure 7.6.20

59. Using nodal analysis, determine the value of V_b for the circuit shown in Figure 7.6.20 .

60. For the circuit shown in Figure 7.6.20 , use nodal analysis to determine the current through the 3 kΩ resistor.

61. Given the circuit in Figure 7.6.21 , write the node equations.

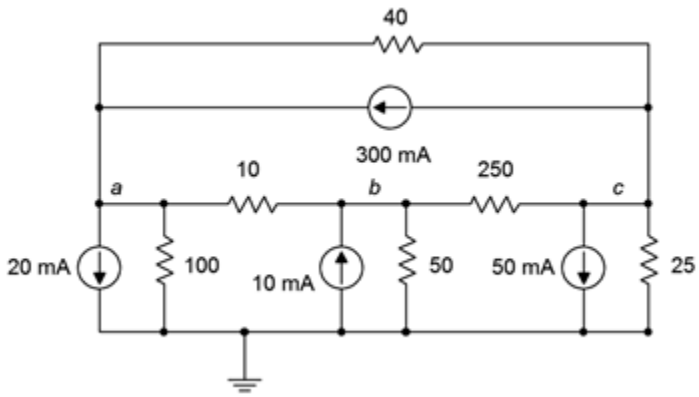

Figure 7.6.21

62. Using nodal analysis, determine the value of V_b for the circuit shown in Figure 7.6.21 .

63. For the circuit shown in Figure 7.6.21 , use nodal analysis to determine the current through the 40 Ω resistor.

64. Given the circuit in Figure 7.6.13 , write the node equations.

65. Using nodal analysis, determine the value of V_d for the circuit shown in Figure 7.6.13 .

66. For the circuit shown in Figure 7.6.13 , use nodal analysis to determine the current passing through the 20 kΩ resistor.

67. Given the circuit in Figure 7.6.14 , write the node equations using the general approach. Do not use source conversions.

68. Using nodal analysis, determine the value of V_{ab} for the circuit shown in Figure 7.6.14 .

69. For the circuit shown in Figure 7.6.14 , use nodal analysis to determine the current passing through the 30 kΩ resistor.

70. Given the circuit in Figure 7.6.15 , write the node equations.

71. Using nodal analysis, determine the value of V_b for the circuit shown in Figure 7.6.15 .

72. For the circuit shown in Figure 7.6.15 , use nodal analysis to determine the current through the 4 kΩ resistor.

73. For the circuit of Figure 7.6.22 , determine V_b.

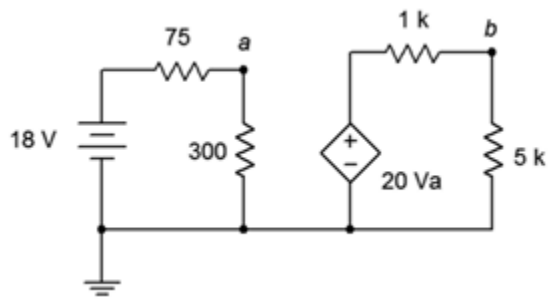

Figure 7.6.22

74. For the circuit of Figure 7.6.23 , determine V_c.

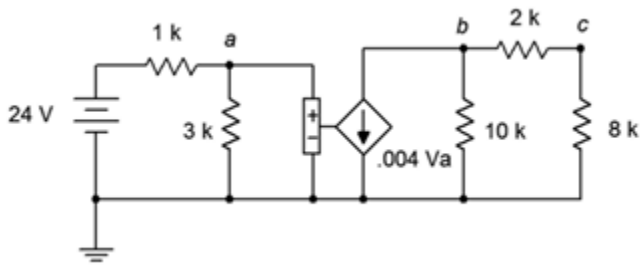

Figure 7.6.23

75. Given the circuit of Figure 7.6.24 , determine V_b.

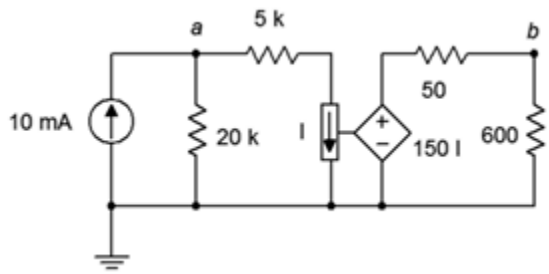

Figure 7.6.24

76. Find the current through the 10 kΩ resistor given the circuit of Figure 7.6.25 .

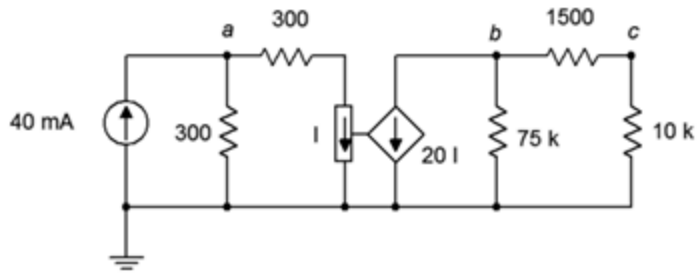

Figure 7.6.25

77. Given the circuit of Figure 7.6.26 , determine V_c.

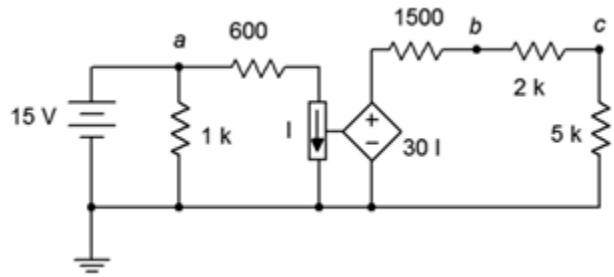

Figure 7.6.26

78. In the circuit of Figure 7.6.27 , determine V_a.

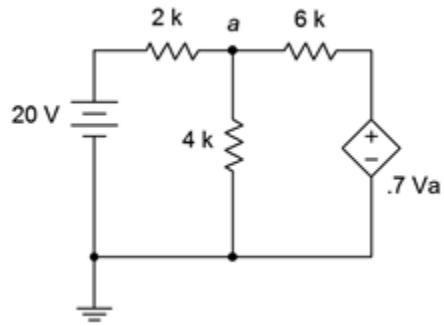

Figure 7.6.27

79. For the circuit of Figure 7.6.28 , determine V_a.

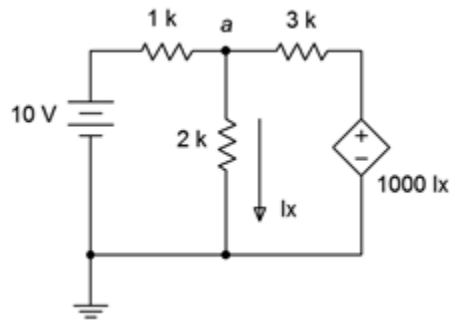

Figure 7.6.28

80. For the circuit of Figure 7.6.29 , determine V_a.

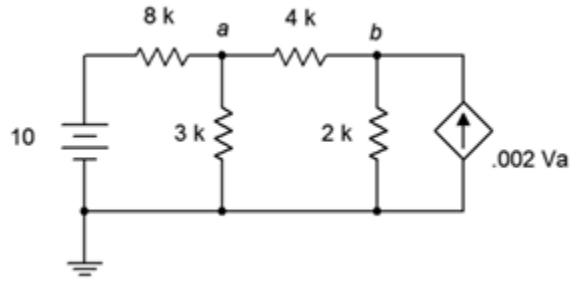

Figure 7.6.29

Challenge

81. Given the circuit in Figure 7.6.8 , write the node equations.

82. Using nodal analysis, determine the value of V_b for the circuit shown in Figure 7.6.8 .

83. For the circuit shown in Figure 7.6.8 , use nodal analysis to determine the current through the 3 kΩ resistor.

84. Given the circuit in Figure 7.6.6 , write the node equations.

85. Using nodal analysis, determine the value of V_c for the circuit shown in Figure 7.6.6 .

86. For the circuit shown in Figure 7.6.6 , use nodal analysis to determine the current through the 8 kΩ resistor.

87. Given the circuit in Figure 7.6.10 , write the node equations and the associated determinants.

88. Using nodal analysis, determine the value of V_{bc} for the circuit shown in Figure 7.6.10 .

89. For the circuit shown in Figure 7.6.10 , use nodal analysis to determine the current through the 2 kΩ resistor.

90. Given the circuit of Figure 7.6.30 , determine V_c.

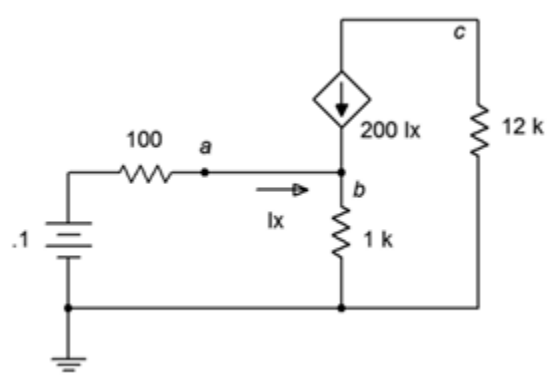

Figure 7.6.30

91. Find the current through the 10 kΩ resistor in the circuit of Figure 7.6.31 .

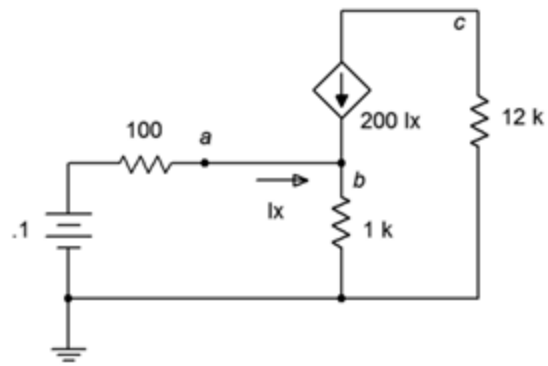

Figure 7.6.31

92. Given the circuit of Figure 7.6.32 , determine V_c.

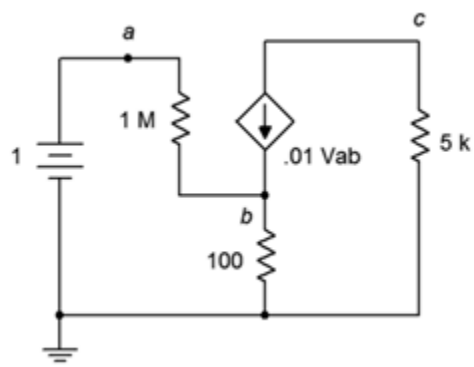

Figure 7.6.32

93. Given the circuit of Figure 7.6.33 , determine the current through the 5 kΩ resistor.

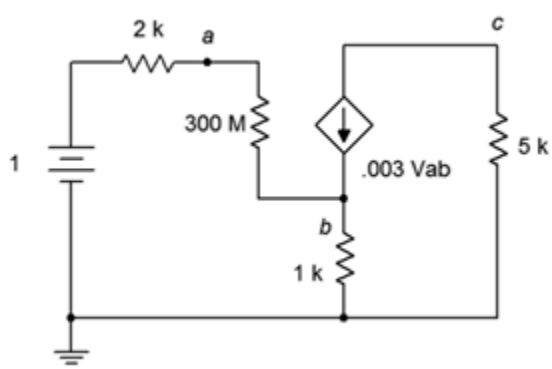

Figure 7.6.33

94. For the circuit of Figure 7.6.34 , determine V_b.

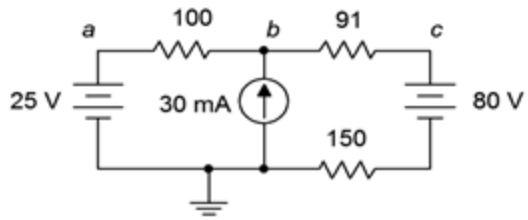

Figure 7.6.34

95. For the circuit of Figure 7.6.35 , determine V_c.

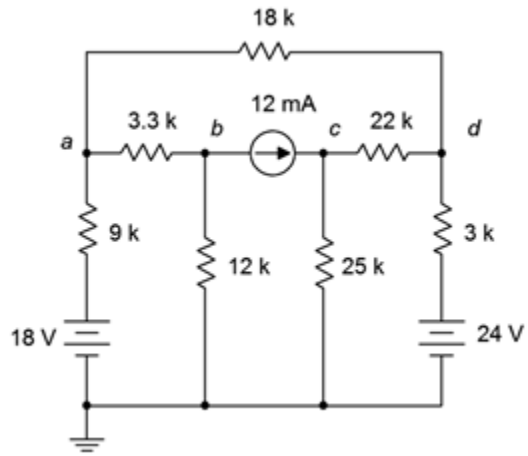

Figure 7.6.35

96. For the circuit of Figure 7.6.36 , determine V_a.

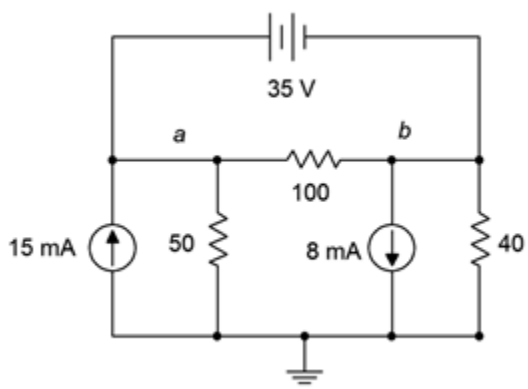

Figure 7.6.36

97. For the circuit of Figure 7.6.37 , determine V_b.

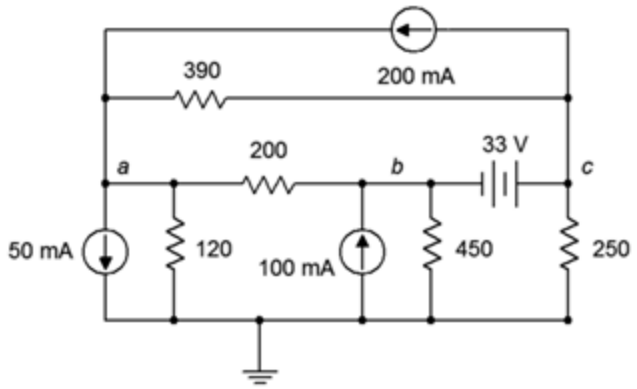

Figure 7.6.37

Simulation

98. Perform a DC bias simulation on the circuit depicted in Figure 7.6.7 to verify the component currents.

99. Perform a DC bias simulation on the circuit depicted in Figure 7.6.9 to verify the component currents.

100. Perform a DC bias simulation on the circuit depicted in Figure 7.6.7 to verify the loop currents and node voltages.

101. Perform a DC bias simulation on the circuit depicted in Figure 7.6.16 to verify the node voltages.

102. Perform a DC bias simulation on the circuit depicted in Figure 7.6.19 to verify the node voltages.

103. Perform a DC bias simulation on the circuit depicted in Figure 7.6.20 to verify the node voltages.

This page titled 7.6: Exercises is shared under a CC BY-NC-SA 4.0 license and was authored, remixed, and/or curated by James M. Fiore via source content that was edited to the style and standards of the LibreTexts platform.

8: CAPACITORS

Learning Objectives

After completing this chapter, you should be able to:

- Describe the theoretical and practical aspects of capacitor construction.
- Describe the current-voltage characteristic behavior of capacitors.
- Utilize component data sheets to determine operating characteristics of capacitors.
- Determine the initial and steady-state equivalents of resistor-capacitor networks.
- Determine the transient response of basic RC networks.

8.1: Introduction

8.2: Capacitance and Capacitors

8.3: Initial and Steady-State Analysis of RC Circuits

8.4: Transient Response of RC Circuits

8.5: Summary

8.6: Exercises

This page titled 8: Capacitors is shared under a CC BY-NC-SA 4.0 license and was authored, remixed, and/or curated by James M. Fiore via source content that was edited to the style and standards of the LibreTexts platform.

8.1: Introduction

This chapter introduces another passive device, the capacitor. Capacitors are fundamentally different from resistors in terms of both their construction and their operation. For starters, when placed in DC circuits, capacitors are not ohmic, unlike resistors. Their current-voltage characteristic does not respond to Ohm's law. Instead, their current-voltage characteristic is dynamic in nature. Further, in the ideal case, capacitors do not dissipate power. Indeed, capacitors are energy storage devices. In a way, you could imagine them to be a little like rechargeable batteries, but unlike batteries these devices could be charged or discharged in tiny fractions of a second and last for billions upon billions of cycles.

Capacitors are an integral part of modern electronic systems. They are used in AC-to-DC power supplies to help smooth and stabilize the output voltage. In audio and communications systems they are used in filters, for example to control the high and low frequency response of amplifiers and similar equipment, or for tuning purposes. Essentially, in any application that needs to smooth out a varying voltage, store electric charge or filter a signal; a capacitor is likely to be used.

Much of the original work on capacitors was done in the 18th century. One of the earliest examples of a capacitor was the Leyden jar, which consists of a glass bottle or jar lined with metal foil on the inside and the outside. Benjamin Franklin's famous kite experiment made use of a Leyden jar. In the early days, capacitors were known as condensers (not to be confused with the condensers used in air conditioning systems).

This page titled 8.1: Introduction is shared under a CC BY-NC-SA 4.0 license and was authored, remixed, and/or curated by James M. Fiore via source content that was edited to the style and standards of the LibreTexts platform.

8.2: Capacitance and Capacitors

A capacitor is a device that stores energy. Capacitors store energy in the form of an electric field. At its most simple, a capacitor can be little more than a pair of metal plates separated by air. As this constitutes an open circuit, DC current will not flow through a capacitor. If this simple device is connected to a DC voltage source, as shown in Figure 8.2.1 , negative charge will build up on the bottom plate while positive charge builds up on the top plate. This process will continue until the voltage across the capacitor is equal to that of the voltage source. In the process, a certain amount of electric charge will have accumulated on the plates.

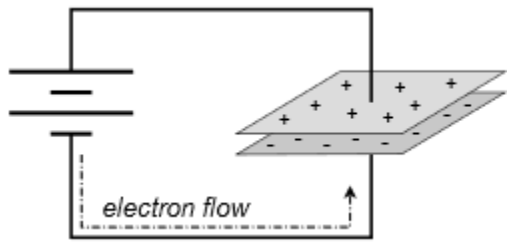

Figure 8.2.1 : Basic capacitor with voltage source.

The ability of this device to store charge with regard to the voltage appearing across it is called capacitance. Its symbol is C and it has units of farads (F), in honor of Michael Faraday, a 19th century English scientist who did early work in electromagnetism. By definition, if a total charge of 1 coulomb is associated with a potential of 1 volt across the plates, then the capacitance is 1 farad.

$$1 \text{ farad } \equiv 1 \text{ coulomb } / 1 \text{ volt} \tag{8.2.1}$$

or more generally,

$$C = \frac{Q}{V} \tag{8.2.2}$$

Where

C is the capacitance in farads,

Q is the charge in coulombs,

V is the voltage in volts.

From Equation 8.2.2 we can see that, for any given voltage, the greater the capacitance, the greater the amount of charge that can be stored. We can also see that, given a certain size capacitor, the greater the voltage, the greater the charge that is stored. These observations relate directly to the amount of energy that can be stored in a capacitor.

Unsurprisingly, the energy stored in capacitor is proportional to the capacitance. It is also proportional to the square of the voltage across the capacitor.

$$W = \frac{1}{2} C V^2 \tag{8.2.3}$$

Where

W is the energy in joules,

C is the capacitance in farads,

V is the voltage in volts.

The basic capacitor consists of two conducting plates separated by an insulator, or dielectric. This material can be air or made from a variety of different materials such as plastics and ceramics. This is depicted in Figure 8.2.2 .

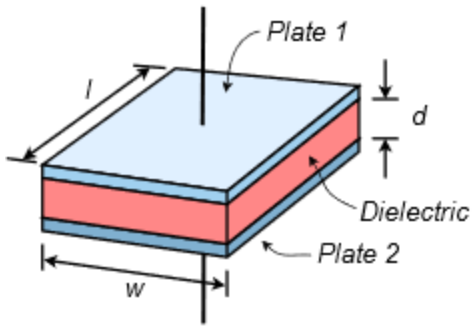

Figure 8.2.2 : Components of a generic capacitor.

For practical capacitors, the plates may be stacked alternately or even made of foil and formed into a rolled tube. However it is constructed, the characteristics of the dielectric will play a major role in the performance of the device, as we shall see.

In general, capacitance increases directly with plate area, A, and inversely with plate separation distance, d. Further, it is also proportional to a physical characteristic of the dielectric; the permittivity, ε. Thus, capacitance is equal to:

$$C = \varepsilon \frac{A}{d} \tag{8.2.4}$$

Where

C is the capacitance in farads,

A is the plate area in square meters,

d is the plate separation distance in meters,

ε is permittivity of the dielectric between the plates.

It should be noted that the effective plate area is somewhat larger than the precise physical area of the plates. This is due to a phenomenon called fringing. Essentially, the electric field lines bulge outward at the plate edges rather than maintain uniform parallel orientation. This is illustrated in Figure 8.2.3

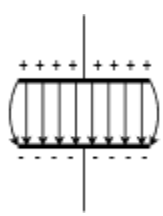

Figure 8.2.3 : Capacitor electric field with fringing.

From Equation 8.2.4 it is obvious that the permittivity of the dielectric plays a major role in determining the volumetric efficiency of the capacitor, in other words, the amount of capacitance that can be packed into a given sized component. Some dielectrics are notably more efficient than others. To make comparisons easier, relative permittivity is often used, that is, the ratio of the dielectric's permittivity to that of a vacuum, ε_0.

A table of relative permittivity for a variety of dielectrics is shown in Table 8.2.1 . A number of common dielectrics, such as various poly plastic films and mica, exhibit permittivities two to six times that of air, but there are also ceramic dielectrics whose dielectrics are hundreds to thousands of times that of air.

Table 8.2.1 : Relative permittivity of various dielectrics. Data derived from Wikipedia and other sources.

Material	Relative permittivity, $\varepsilon_r = \varepsilon/\varepsilon_0$
Vacuum	1 (ε_0 =8.85E−12 farads/meter)

Material	Relative permittivity, $\varepsilon_r = \varepsilon/\varepsilon_0$
Air	1.00058986 (at STP)
PTFE/Teflon	2.1
Polyethylene/XLPE	2.25
Polyimide	3.4
Polypropylene	2.2-2.36
Polystyrene	2.4-2.7
Polyester (Mylar)	3.1
Paper	1.4
Mica	3-6
Silicon dioxide	3.9
Rubber	7
Diamond	5.5-10
Silicon	11.68
Titanium dioxide	86-173
Strontium titanate	310
Calcium copper titanate	>250,000

At quick glance, it might seem that choosing the dielectric with the highest permittivity would be the best choice but this is not necessarily the case. There are several other factors that go into this decision including temperature stability, leakage resistance (effective parallel resistance), ESR (equivalent series resistance) and breakdown strength. For an ideal capacitor, leakage resistance would be infinite and ESR would be zero.

Unlike resistors, capacitors do not have maximum power dissipation ratings. Instead, they have maximum voltage ratings. The breakdown strength of the dielectric will set an upper limit on how large of a voltage may be placed across a capacitor before it is damaged. Breakdown strength is measured in volts per unit distance, thus, the closer the plates, the less voltage the capacitor can withstand. For example, halving the plate distance doubles the capacitance but also halves its voltage rating. Table 8.2.2 lists the breakdown strengths of a variety of different dielectrics. Comparing the tables of Tables 8.2.1 and 8.2.2 hints at the complexity of the situation. For instance, consider polystyrene versus polypropylene. Polystyrene offers modestly increased permittivity yet polypropylene has a considerable advantage in terms of breakdown strength. As a consequence, the plates can be placed much closer together when using polypropylene while achieving the same voltage rating as a capacitor using polystyrene. Therefore, the polypropylene capacitor will require less volume for the same capacitance. As an added benefit, polypropylene exhibits high temperature stability and low moisture absorption, among other characteristics. Comparing polypropylene to polyester, we find that polyester's improved permittivity along with a similar breakdown strength yields improved volumetric efficiency over polypropylene. Unfortunately, polyester suffers from greater temperature dependence.

Table 8.2.2 : Dielectric strength of various dielectrics. Data derived from Wikipedia and other sources.c

Substance	Breakdown Strength (kV/mm)
Air	3.0
Borosilicate glass	20-40
PTFE (Teflon, insulating film)	60-173
Polyethylene	19-160
Polypropylene	650
Polystyrene	19.7
PEEK (Polyether ether ketone)	23

Substance	Breakdown Strength (kV/mm)
Polyester (Mylar)	580
Neoprene rubber	15.7-26.7
Distilled water	65-70
Waxed paper	40-60
Mica	118
Diamond	2,000
PZT (ceramic)	10-25

Capacitor Styles and Packaging

Capacitors are available in a wide range of capacitance values, from just a few picofarads to well in excess of a farad, a range of over 10^{12}. Unlike resistors, whose physical size relates to their power rating and not their resistance value, the physical size of a capacitor is related to both its capacitance and its voltage rating (a consequence of Equation 8.2.4. Modest surface mount capacitors can be quite small while the power supply filter capacitors commonly used in consumer electronics devices such as an audio amplifier can be considerably larger than a D cell battery. A sampling of capacitors is shown in Figure 8.2.4 .

Figure 8.2.4 : A variety of capacitor styles and packages.

Toward the front and left side of the photo are a variety of plastic film capacitors. The disk-shaped capacitor uses a ceramic dielectric. The small square device toward the front is a surface mount capacitor, and to its right is a teardrop-shaped tantalum capacitor, commonly used for power supply bypass applications in electronic circuits. The medium sized capacitor to the right with folded leads is a paper capacitor, at one time very popular in audio circuitry. A number of capacitors have a crimp ring at one side, including the large device with screw terminals. These are aluminum electrolytic capacitors. These devices tend to exhibit high volumetric efficiency but generally do not offer top performance in other areas such as absolute accuracy and leakage current. They usually are polarized, meaning that the leads must match the polarity of the applied voltage. Inserting them into a circuit backwards can result in catastrophic failure. The polarity is usually identified by a series of minus signs and/or a stripe that indicates the negative lead. Tantalum capacitors are also polarized but are typically denoted with a plus sign next to the positive lead. A variable capacitor used for tuning radios is shown in Figure 8.2.5 . One set of plates is fixed to the frame while an intersecting set of plates is affixed to a shaft. Rotating the shaft changes the amount of plate area that overlaps, and thus changes the capacitance.

Figure 8.2.5 : A variable capacitor.

For large capacitors, the capacitance value and voltage rating are usually printed directly on the case. Some capacitors use “MFD” which stands for “microfarads”. While a capacitor color code exists, rather like the resistor color code, it has generally fallen out of favor. For smaller capacitors a numeric code is used that echoes the color code. Typically it consists of a three digit number such as “152”.

The first two digits are the precision portion and the third digit is the power of ten multiplier. The result is in picofarads. Thus, 152 is 1500 pf.

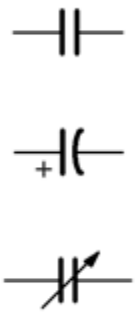

Figure 8.2.6 : Capacitor schematic symbols (top-bottom): non-polarized, polarized, variable.

The schematic symbols for capacitors are shown in Figure 8.2.6 . There are three symbols in wide use. The first symbol, using two parallel lines to echo the two plates, is for standard non-polarized capacitors. The second symbol represents polarized capacitors. In this variant, the positive lead is drawn with a straight line for that plate and often denoted with a plus sign. The negative terminal is drawn with a curved line. The third symbol is used for variable capacitors and is drawn with an arrow through it, rather like a rheostat.

Figure 8.2.7 : An LCR meter, designed to read capacitance, resistance and inductance.

In order to obtain accurate measurements of capacitors, an LCR meter, such as the one shown in Figure 8.2.7 , may be used. These devices are designed to measure the three common passive electrical components: resistors, capacitors and inductors[1].

Unlike a simple digital multimeter, an LCR meter can also measure the values at various AC frequencies instead of just DC, and also determine secondary characteristics such as equivalent series resistance and effective parallel leakage resistance.

Capacitor Data Sheet

A portion of a typical capacitor data sheet is shown in Figure 8.2.8 . This is for a series of through-hole style metallized film capacitors using polypropylene for the dielectric. First we see a listing of general features. For starters, we find that the capacitors use a flame retardant epoxy coating and are also RoHS compliant. We then move to a set of electrical performance specifications. For example, we see that this series is available in two variants, one rated at 800 volts DC and the other rated at 1600 volts DC. Further, tolerance is available as either $\pm$3% or $\pm$5%. Dissipation factor $(\tan\delta)$ is a measure of particular importance for AC operation and is proportional to the ESR (equivalent series resistance, ideally 0), smaller being better. The insulation resistance indicates the value of an effective parallel leakage resistance (higher is better), here, some 30,000 MΩ. Finally, we see physical size data, essential for printed circuit board layouts.

Capacitors in Series and in Parallel

Multiple capacitors placed in series and/or parallel do not behave in the same manner as resistors. Placing capacitors in parallel increases overall plate area, and thus increases capacitance, as indicated by Equation 8.2.4. Therefore capacitors in parallel add in value, behaving like resistors in series. In contrast, when capacitors are placed in series, it is as if the plate distance has increased, thus decreasing capacitance. Therefore capacitors in series behave like resistors in parallel. Their value is found via the reciprocal of summed reciprocals or the product-sum rule.

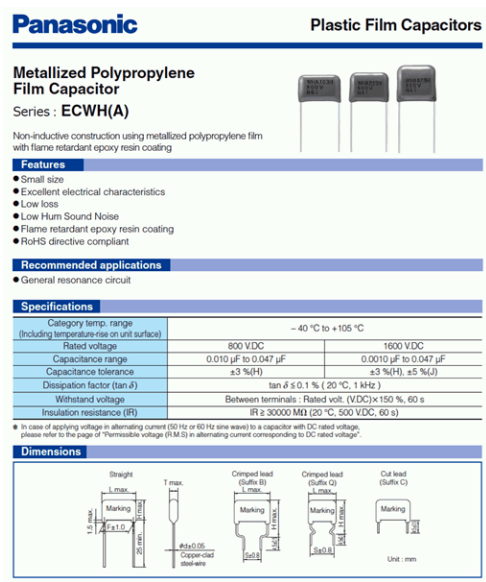

Panasonic Plastic Film Capacitors

Metallized Polypropylene Film Capacitor

Series : **ECWH(A)**

Non-inductive construction using metallized polypropylene film with flame retardant epoxy resin coating

Features

- Small size
- Excellent electrical characteristics
- Low loss
- Low Hum Sound Noise
- Flame retardant epoxy resin coating
- RoHS directive compliant

Recommended applications

- General resonance circuit

Specifications

Category temp. range (Including temperature-rise on unit surface)	− 40 °C to +105 °C	
Rated voltage	800 VDC	1600 VDC
Capacitance range	0.010 μF to 0.047 μF	0.0010 μF to 0.047 μF
Capacitance tolerance	±3 %(H)	±3 %(H), ±5 %(J)
Dissipation factor (tan δ)	tan δ ≤ 0.1 % (20 °C, 1 kHz)	
Withstand voltage	Between terminals : Rated volt. (VDC)×150 %, 60 s	
Insulation resistance (IR)	IR ≥ 30000 MΩ (20 °C, 500 VDC, 60 s)	

● In case of applying voltage in alternating current (50 Hz or 60 Hz sine wave) to a capacitor with DC rated voltage, please refer to the page of "Permissible voltage (R.M.S) in alternating current corresponding to DC rated voltage".

Dimensions

Figure 8.2.8 : Capacitor data sheet. Courtesy of Panasonic

Example 8.2.1

Find the equivalent capacitance of the network shown in Figure 8.2.9 .

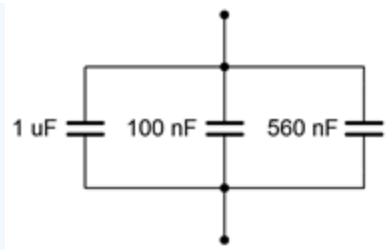

Figure 8.2.9 : Circuit for Example 8.2.1 .

These capacitors are all in parallel, and thus, the equivalent value is the sum of the three capacitances:

$$C_{Total} = C_1 + C_2 + C_3$$

$$C_{Total} = 1\mu F + 100nF + 560nF$$

$$C_{Total} = 1.66\mu F$$

Example 8.2.2

Find the equivalent capacitance of the network shown in Figure 8.2.10 .

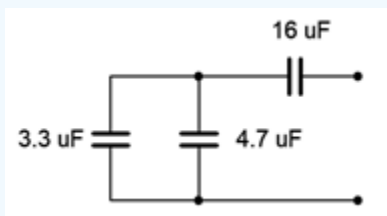

Figure 8.2.10 : Circuit for Example 8.2.2 .

In this circuit, we find that the left and middle capacitors are in parallel. This combination is in series with the capacitor to the right:

$$C_{left} = C_1 + C_2$$

$$C_{left} = 3.3\mu F + 4.7\mu F$$

$$C_{left} = 8\mu F$$

$$C_{Total} = \frac{C_{left}C_3}{C_{left} + C_3}$$

$$C_{Total} = \frac{8\mu F 16\mu F}{8\mu F + 16\mu F}$$

$$C_{Total} \approx 5.33\mu F$$

If a circuit contains nothing but a voltage source in parallel with a group of capacitors, the voltage will be the same across all of the capacitors, just as it is in a resistive parallel circuit. If the circuit instead consists of multiple capacitors that are in series with a voltage source, as shown in Figure 8.2.11 , the voltage will divide between them in inverse proportion. In other words, the larger the capacitance, the smaller its share of the applied voltage. The voltages can also be found by first determining the series equivalent capacitance. The total charge may then be determined using the applied voltage. Finally, the individual voltages are computed from Equation 8.2.2, $V = Q/C$, where Q is the total charge and C is the capacitance of interest. This is illustrated in the following example.

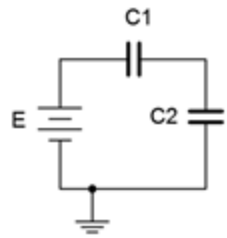

Figure 8.2.11 : A simple capacitors-only series circuit.

Example 8.2.3

Find the voltages across the capacitors in Figure 8.2.12 .

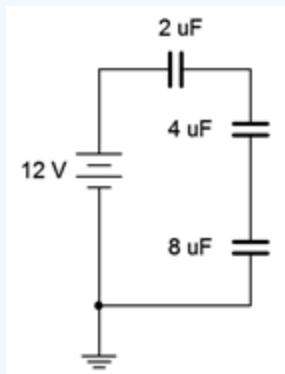

Figure 8.2.12 : Circuit for Example 8.2.3 .

The first step is to determine the total capacitance. As these are in series, we can use the reciprocal rule:

$$C_{Total} = \frac{1}{\frac{1}{C_1} + \frac{1}{C_2} + \frac{1}{C_3}}$$

$$C_{Total} = \frac{1}{\frac{1}{2\mu F} + \frac{1}{4\mu F} + \frac{1}{8\mu F}}$$

$$C_{Total} \approx 1.143\mu F$$

From here we determine the total charge:

$$Q = VC$$

$$Q = 12V1.143\mu F$$

$$Q = 13.71\mu C$$

Charge is constant across all of the series capacitors, therefore:

$$V_{2uF} = \frac{Q}{C}$$

$$V_{2uF} = \frac{13.71\mu C}{2\mu F}$$

$$V_{2uF} = 6.855V$$

$$V_{4uF} = \frac{Q}{C}$$

$$V_{4uF} = \frac{13.71\mu C}{4\mu F}$$

$$V_{4uF} = 3.427V$$

$$V_{8uF} = \frac{Q}{C}$$

$$V_{8uF} = \frac{13.71\mu C}{8\mu F}$$

$$V_{8uF} = 1.714V$$

The sum of the three voltages is 12 volts (within rounding error) and verifies KVL as expected.

Practical Tip

While it may be tempting to try, do not attempt to verify the operation of Example 8.2.3 in the laboratory using a standard DMM. The reason is because the internal resistance of a typical digital voltmeter is many orders of magnitude lower than the leakage resistance of the capacitors. As a result, charge will be transferred to the meter, ruining the measurement. It would be akin to trying to measure the voltages across a string of resistors, each in excess of 100 MΩ, with a meter whose internal resistance is 1 MΩ. The meter's resistance dominates the parallel combination and causes excessive loading which ruins the measurement. A special sort of voltmeter, an electrostatic voltmeter or electrometer, is needed for these types of measurements. These are sometimes referred to as non-charge transfer meters.

Current-Voltage Relationship

The fundamental current-voltage relationship of a capacitor is not the same as that of resistors. Capacitors do not so much resist current; it is more productive to think in terms of them reacting to it. The current through a capacitor is equal to the capacitance times the rate of change of the capacitor voltage with respect to time (i.e., its slope). That is, the value of the voltage is not important, but rather how quickly the voltage is changing. Given a fixed voltage, the capacitor current is zero and thus the capacitor behaves like an open. If the voltage is changing rapidly, the current will be high and the capacitor behaves more like a short. Expressed as a formula:

$$i = C\frac{dv}{dt} \tag{8.2.5}$$

Where

i is the current flowing through the capacitor,

C is the capacitance,

dv/dt is the rate of change of capacitor voltage with respect to time.

A particularly useful form of Equation 8.2.5 is:

$$\frac{dv}{dt} = \frac{i}{C} \tag{8.2.6}$$

An alternate way of looking at Equation 8.2.5 indicates that if a capacitor is fed by a constant current source, the voltage will rise at a constant rate (dv/dt). It is continuously depositing charge on the plates of the capacitor at a rate of I, which is equivalent to Q/t. As long as the current is present, feeding the capacitor, the voltage across the capacitor will continue to rise. A good analogy is if we had a pipe pouring water into a tank, with the tank's level continuing to rise. This process of depositing charge on the plates is referred to as charging the capacitor. For example, considering the circuit in Figure 8.2.13 , we see a current source feeding a single capacitor. If we were to plot the capacitor's voltage over time, we would see something like the graph of Figure

8.2.14 .

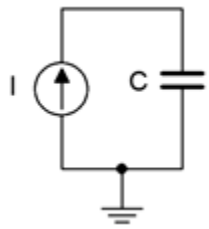

Figure 8.2.13 : Capacitor with current source.

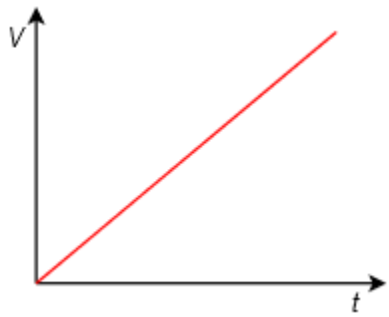

Figure 8.2.14 : Capacitor voltage versus time.

As time progresses, the voltage across the capacitor increases with a positive polarity from top to bottom. With a theoretically perfect capacitor and source, this would continue forever, or until the current source was turned off. In reality, this line would either begin to deflect horizontally as the source reached its limits, or the capacitor would fail once its breakdown voltage was reached. The slope of this line is dictated by the size of the current source and the capacitance.

Example 8.2.4

Determine the rate of change of voltage across the capacitor in the circuit of Figure 8.2.15 . Also determine the capacitor's voltage 10 milliseconds after power is switched on.

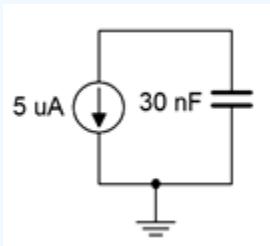

Figure 8.2.15 : Circuit for Example 8.2.4 .

First, note the direction of the current source. This will produce a negative voltage across the capacitor from top to bottom. The rate of change is:

$$\frac{dv}{dt} = \frac{i}{C}$$

$$\frac{dv}{dt} = \frac{-5\mu A}{30nF}$$

$$\frac{dv}{dt} \approx -166.7 \text{ volts per second}$$

Thus, for every second, the voltage rises another –166.7 volts. Assuming it is completely uncharged when power is applied, after 10 milliseconds it will have risen to –166.7 V/s times 10 ms, or –1.667 volts.

Equation 8.2.6 provides considerable insight into the behavior of capacitors. As just noted, if a capacitor is driven by a fixed current source, the voltage across it rises at the constant rate of i/C. There is a limit to how quickly the voltage across the capacitor can change. An instantaneous change means that dv/dt is infinite, and thus, the current driving the capacitor would also have to be infinite (an impossibility). This is not an issue with resistors, which obey Ohm's law, but it is a limitation of capacitors. Therefore we can state a particularly important characteristic of capacitors:

$$\text{The voltage across a capacitor cannot change instantaneously.} \tag{8.2.7}$$

This observation will be key to understanding the operation of capacitors in DC circuits.

References

[1]Inductors are the subject of the next chapter.

This page titled 8.2: Capacitance and Capacitors is shared under a CC BY-NC-SA 4.0 license and was authored, remixed, and/or curated by James M. Fiore via source content that was edited to the style and standards of the LibreTexts platform.

8.3: Initial and Steady-State Analysis of RC Circuits

When analyzing resistor-capacitor circuits, always remember that capacitor voltage cannot change instantaneously. If we assume that a capacitor in a circuit is not initially charged, then its voltage must be zero. The instant the circuit is energized, the capacitor voltage must still be zero. If there is no voltage across the device, then it is behaving like a short circuit. We call this the initial state. Thus, we have our first rule regarding RC circuits:

$$\text{For DC analysis, initially capacitors appear as shorts.} \tag{8.3.1}$$

Consider the circuit of Figure 8.3.1 . Assume that C_1 and C_2 are initially uncharged and there is no voltage across them.

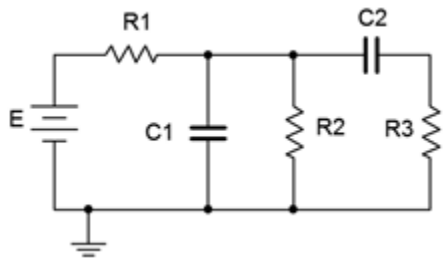

Figure 8.3.1 : A basic resistor-capacitor (RC) circuit.

The instant power is applied, the two capacitors appear as short circuits. If we redraw the circuit for this instant in time, we arrive at the equivalent circuit shown in Figure 8.3.2 .

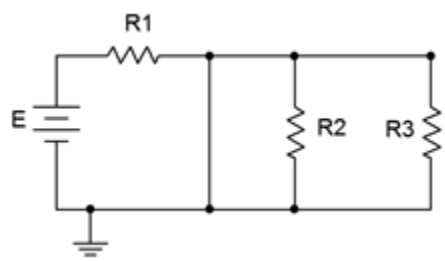

Figure 8.3.2 : A basic RC circuit, initial state.

Given this equivalent, we can see that shorting C_2 places R_2 and R_3 in parallel, however, they are both shorted out by C_1. This leaves only R_1 left in the circuit along with the source, E. At this point, currents will begin to flow, and thus begin charging up the capacitors. As the capacitor voltages rise, the current will begin to decrease, and eventually the capacitors will stop charging. At that point no further current will be flowing, and thus the capacitor will behave like an open. We call this the steadystate condition and we can state our second rule:

$$\text{At steady-state, capacitors appear as opens.} \tag{8.3.2}$$

Continuing with the example, at steady-state both capacitors behave as opens. This is shown in Figure 8.3.3 . This leaves E to drop across R_1 and R_2. This will create a simple voltage divider. The steady-state voltage across C_1 will equal that of R_2. As C_2 is also open, the voltage across R_3 will be zero while the voltage across C_2 will be the same as that across R_2.

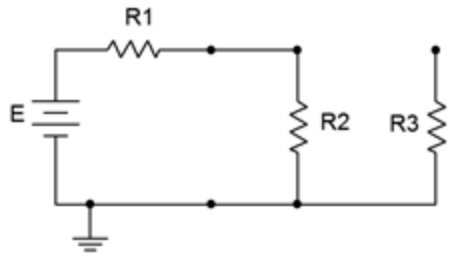

Figure 8.3.3 : A basic RC circuit, steady-state.

In reality, practical capacitors can be thought of as an ideal capacitance in parallel with a very large (leakage) resistance, so there will be a limit to this performance.

Example 8.3.1

Given the circuit of Figure 8.3.4 , find the voltage across the 6 kΩ resistor for both the initial and steady-state conditions assuming the capacitor is initially uncharged.

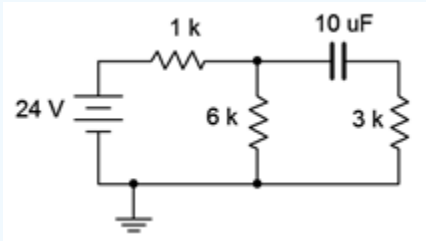

Figure 8.3.4 : Circuit for Example 8.2.4.

For the initial state the capacitor is treated as a short. The initial state equivalent circuit is drawn below in Figure 8.3.5 . Immediately apparent is the parallel connection between the 6 kΩ and 3 kΩ resistors. This combination is equivalent to 2 k Ω. Therefore, we can perform a voltage divider to find the potential across the 6 kΩ (i.e., the 2 kΩ combo).

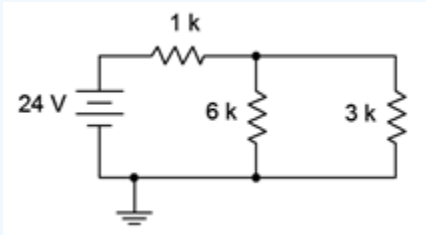

Figure 8.3.5 : Circuit of Figure 8.3.3 , initial state.

$$V_{6k} = E\frac{R_x}{R_x + R_y}$$

$$V_{6k} = 24V\frac{2k\Omega}{2k\Omega + 1k\Omega}$$

$$V_{6k} = 16V$$

For the steady-state condition the capacitor will be fully charged, its current will be zero, and we treat it as an open. The steady-state equivalent circuit is drawn below in Figure 8.3.6 .

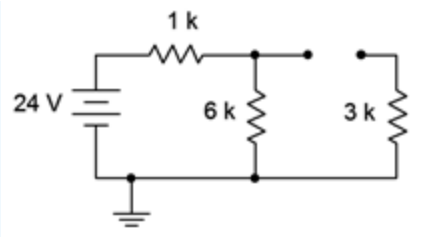

Figure 8.3.6 : Circuit of Figure 8.3.3 , steady-state.

The 3 kΩ resistor is now out of the picture, leaving us with the 6 kΩ in series with the 1 kΩ resistor. Once again, a voltage divider may be used to determine the voltage across the 6 kΩ.

$$V_{6k} = E\frac{R_x}{R_x + R_y}$$

$$V_{6k} = 24V\frac{6k\Omega}{6k\Omega + 1k\Omega}$$

$$V_{6k} = 20.57V$$

This page titled 8.3: Initial and Steady-State Analysis of RC Circuits is shared under a CC BY-NC-SA 4.0 license and was authored, remixed, and/or curated by James M. Fiore via source content that was edited to the style and standards of the LibreTexts platform.

8.4: Transient Response of RC Circuits

The question remains, “What happens between the time the circuit is powered up and when it reaches steady-state?” This is known as the transient response. Consider the circuit shown in Figure 8.4.1 . Note the use of a voltage source rather than a fixed current source, as examined earlier.

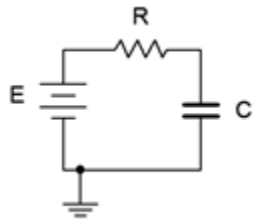

Figure 8.4.1 : A simple RC circuit.

The key to the analysis is to remember that capacitor voltage cannot change instantaneously. Assuming the capacitor is uncharged, the instant power is applied, the capacitor voltage must be zero. Therefore all of the source voltage drops across the resistor. This creates the initial current, and this current starts to charge the capacitor (the initial rate being equal to i/C as dictated by Equation 8.2.6). According to Kirchhoff's voltage law, as the capacitor voltage begins to increase, the resistor voltage must decrease because the sum of the two must equal the fixed source voltage. This means that the circulating current must also decrease. This, in turn, means that the rate of capacitor voltage increase begins to slow. As the capacitor voltage continues to increase, less voltage is available for the resistor, causing further reductions in current, and a further slowing of the rate of capacitor voltage change. Eventually, the capacitor voltage will be nearly equal to the source voltage. This will result in a very small potential across the resistor and an equally small current, slowing subsequent capacitor voltage increases to a near standstill. Theoretically, the capacitor voltage approaches the source voltage but never quite equals it. Similarly, the current drops to near zero, but never completely turns off. This is illustrated in Figure 8.4.2 .

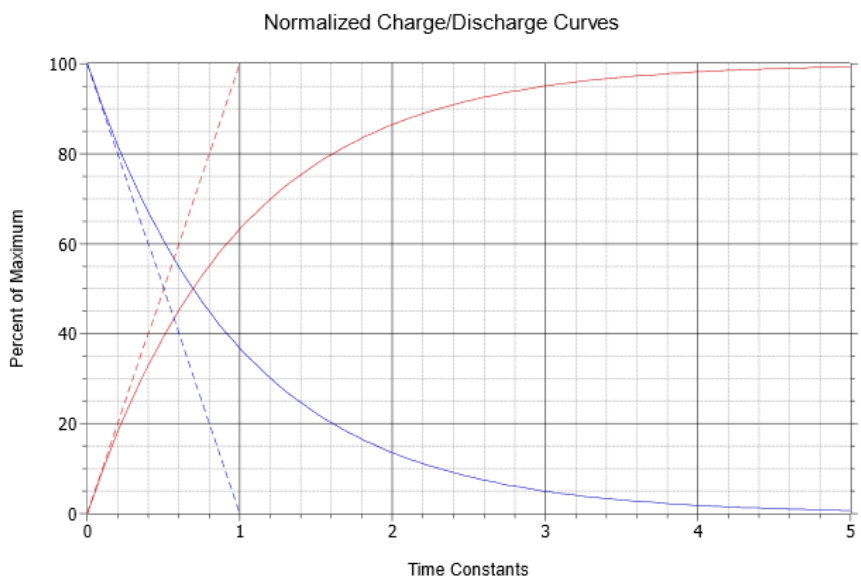

Figure 8.4.2 : Normalized charge and discharge curves.

The dashed red line represents the initial rate of change of capacitor voltage. This trajectory is what would be expected if an ideal current source drove the capacitor, as in Example 8.2.4. As noted previously, the rate of voltage change versus times is equal to i/C, and therefore in this case, E/RC. If the initial rate of change were to continue unabated, the source voltage, E, would be reached in RC seconds. Consequently, RC is referred to as the charge time constant and is denoted by τ (Greek letter tau). Thus,

$$\text{Time constant, } \tau = RC \tag{8.4.1}$$

As noted, once the capacitor begins to charge, the current begins to decrease and the capacitor voltage curve begins to fall away from the initial trajectory. The solid red curve represents the capacitor voltage. Notice that after five time constants the capacitor is nearly fully charged and the circuit is considered to be in steady-state (i.e., the capacitor behaves as an open).

$$\text{Steady-state is reached in approximately five time constants.} \tag{8.4.2}$$

This sort of recursively dependent operation is characteristic of exponential functions. The equation for the capacitor's voltage charging curve is:

$$V_C(t) = E\left(1 - \epsilon^{-\frac{t}{\tau}}\right) \tag{8.4.3}$$

Where

$V_C(t)$ is the capacitor voltage at time t,

E is the source voltage,

t is the time of interest,

τ is the time constant,

ε (also written e) is the base of natural logarithms, approximately 2.718.

The dashed blue line shows the initial slope of current change. The solid blue curve shows the circulating current (and by extension of Ohm's law, the resistor voltage). The equation for this curve, which follows the general shape ε^{-t}, is:

$$I(t) = \frac{E}{R}\epsilon^{-\frac{t}{\tau}} \tag{8.4.4}$$

and

$$V_R(t) = E\epsilon^{-\frac{t}{\tau}} \tag{8.4.5}$$

Once power is removed or bypassed, the stored charge on the capacitor will dissipate through any associated resistor(s) creating a discharge current which will end with the capacitor voltage drained back to zero. During the discharge phase, both the capacitor's voltage and current will follow the solid blue curve; Equations 8.4.4 and 8.4.5 being appropriate. The discharge time constant may be different from the charge times constant, depending on the associated resistances.

A precise derivation of the exponential charge/discharge equations is given in Appendix C.

Example 8.4.1

Given the circuit of Figure 8.4.3 , assume the switch is closed at time $t = 0$. Determine the charging time constant, the amount of time after the switch is closed before the circuit reaches steady-state, and the capacitor voltage at $t = 0$, $t = 50$ milliseconds and $t = 1$ second. Assume the capacitor is initially uncharged.

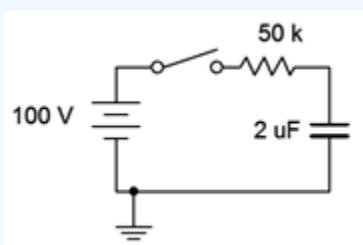

Figure 8.4.3 : Circuit for Example 8.4.1 .

First, the time constant:

$$\tau = RC$$

$$\tau = 50k\Omega 2\mu F$$

$$\tau = 100ms$$

Steady-state will be reached in five time constants, or 500 milliseconds. Therefore we know that $V_C(0) = 0$ volts and $V_C(1) = 100$ volts. To find $V_C(50ms)$ we simply solve Equation 8.4.3.

$$V_C(t) = E\left(1 - \epsilon^{-\frac{t}{\tau}}\right)$$

$$V_C(50ms) = 100V\left(1 - \epsilon^{-\frac{50ms}{100ms}}\right)$$

$$V_C(50ms) \approx 39.35V$$

This value can also be determined graphically from Figure 8.4.2 . The time of 50 milliseconds represents one-half time constant. Find this value on the horizontal axis and then track straight up to the solid red curve that represents the charging capacitor voltage. The point of intersection is at approximately 40% of the maximum value on the vertical axis. The maximum value here is the source voltage of 100 volts. Therefore the capacitor will have reached approximately 40% of 100 volts, or just about 40 volts.

Computer Simulation

The circuit of Figure 8.4.3 is entered into a simulator, as shown in Figure 8.4.4 . In order to reflect the notion of a time-varying circuit with a switch, the 100 volt DC voltage source has been replaced with a rectangular pulse voltage source. This source starts at 0 volts and then immediately steps up to 100 volts. It stays at this level for 500 milliseconds before dropping back to 0 volts.

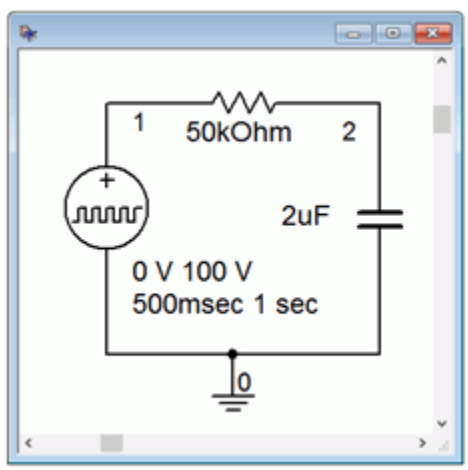

Figure 8.4.4 : Circuit of Figure 8.4.3 in a simulator.

A transient (i.e., time domain) simulation is run, plotting the capacitor voltage over time for the first 500 milliseconds. This is seen in Figure 8.4.5 . There are several items to note here. First, we see that the overall shape perfectly echoes the generic curve presented in Figure 8.4.2 . Second, we see that after the predicted five time constants, or 500 milliseconds, the capacitor voltage has plateaued, indicating steady-state. Third, at steady-state the capacitor voltage has virtually reached the maximum value set be the source, or 100 volts. Finally, at 50 milliseconds, we see that the capacitor voltage has reached roughly 40 volts, just as predicted.

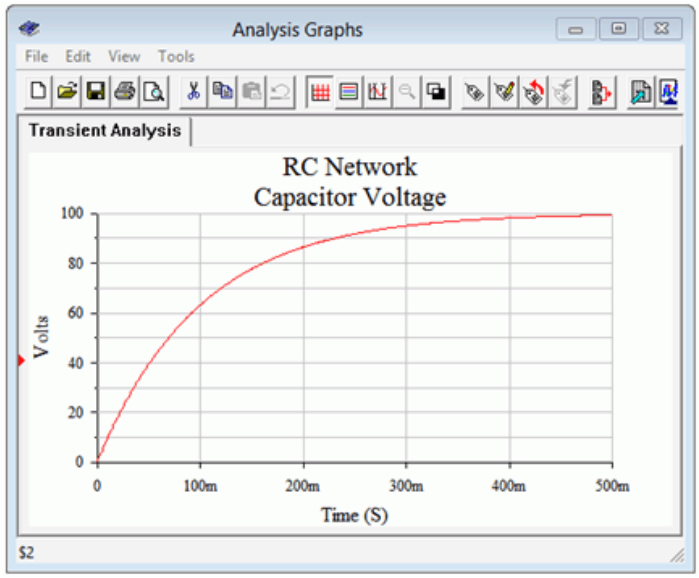

Figure 8.4.5 : Simulation results for the circuit of Figure 8.4.2 .

As mentioned previously, it is possible for a circuit to have different charge and discharge time constants. This could occur if a switch introduces or removes component(s) between the charge versus discharge phases. Further, because the capacitor is discharging, its current direction will be opposite to that of the charging current. KVL still must be satisfied, but because the capacitor is now behaving as a source, the magnitude of the discharge resistance's voltage must equal the capacitor voltage magnitude. Therefore, its curve will take the same shape (the solid blue curve of Figure 8.4.2). These issues will be illustrated in the following example.

Example 8.4.2

For the circuit of Figure 8.4.6 , assume the capacitor is initially uncharged. At time $t = 0$ the switch contacts position 1. The switch is thrown to position 2 at time $t = 50$ milliseconds.

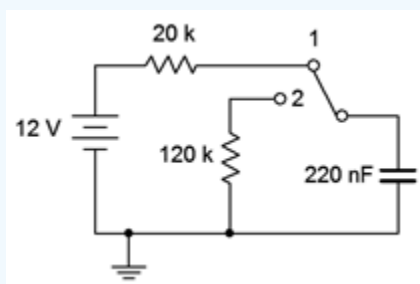

Figure 8.4.6 : Circuit for Example 8.4.2 .

Determine the charging time constant, the amount of time after the switch is closed before the circuit reaches steady-state, the maximum charging and discharging currents, and the capacitor voltage at $t = 0$, $t = 50$ milliseconds, $t = 90$ milliseconds, and $t = 1$ second.

We begin with the charge time constant:

$$\tau_{charge} = RC$$

$$\tau_{charge} = 20k\Omega 220nF$$

$$\tau_{charge} = 4.4ms$$

Steady-state will be reached in 5 times 4.4 milliseconds, or 22 milliseconds. The capacitor is initially uncharged, so $V_C(0) = 0$ volts. As the capacitor will have reached steady-state in 22 milliseconds, $V_C(50ms) = 12$ volts. The maximum charging current will occur at $t = 0$ when all of the 12 volt source drops across the 20 kΩ resistor, or 600 μamps, flowing left to right.

At 50 milliseconds the switch is thrown to position 2. The 12 volt source and 20 kΩ resistor are no longer engaged. At this point the capacitor has 12 volts across it, positive to negative, top to bottom. As the capacitor voltage cannot change instantaneously, the capacitor now acts as a voltage source and discharges through the 120 kΩ resistor. Note that the discharge current is flowing counterclockwise, the opposite of the charging current. The discharge time constant is:

$$\tau_{discharge} = RC$$

$$\tau_{discharge} = 120k\Omega 220nF$$

$$\tau_{discharge} = 26.4ms$$

The capacitor will fully discharge down to 0 volts in 5 time constants, or some 132 milliseconds after the switch is thrown to position 2. Thus steady-state occurs at $t = 182$ milliseconds. The maximum discharge current occurs the instant the switch is thrown to position 2 when all of the capacitor's 12 volts drops across the 120 kΩ resistor, yielding 100 μ amps, flowing top to bottom.

Clearly, at $t = 90$ milliseconds the capacitor is in the discharge phase. The capacitor's voltage and current during the discharge phase follow the solid blue curve of Figure 8.4.2 . The elapsed time for discharge is 90 milliseconds minus 50 milliseconds, or 40 milliseconds net. We can use a slight variation on Equation 8.4.5 to find the capacitor voltage at this time.

$$V_C(t) = E\epsilon^{-\frac{t}{\tau}}$$

$$V_C(40ms) = 12V - \epsilon^{-\frac{40ms}{26.4ms}}$$

$$V_C(40ms) \approx 2.637V$$

The shape of the capacitor's voltage will appear somewhat like a rounded pulse, rising with a curve and then falling back to zero with a complementary curve (the red and then blue curves of Figure 8.4.2).

Basic single resistor-capacitor circuits prove to be fairly easy to solve given a little practice, but what if a more complex circuit is used? In this situation the section feeding the capacitor may be simplified using Thévenin's theorem to determine the effective source voltage and charging resistance. The circuit then reverts back to a simple RC network which may be solved directly.

If power is interrupted before the capacitor is fully charged, the equations presented previously may be used to determine the precise voltage(s) and current(s) reached. The capacitor will then behave as a voltage source and begin to discharge, its voltage curve following the blue plot line of Figure 8.4.2 , with its maximum voltage being what the capacitor charged to, not the associated driving voltage. The following example and simulations address these issues.

Example 8.4.3

For this example we shall revisit the circuit of Example 8.3.1. The circuit is redrawn in Figure 8.4.7 for convenience. Assume the capacitor is initially uncharged.

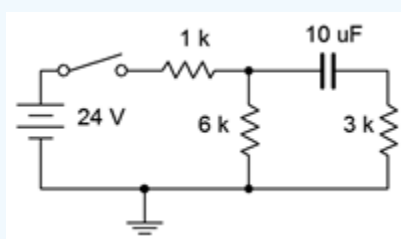

Figure 8.4.7 : Circuit for Example 8.4.3 .

Determine the charging time constant, the amount of time after the switch is closed before the circuit reaches steady-state, and the capacitor voltage at $t = 0$, 100 milliseconds, and 200 milliseconds. At 200 milliseconds, the switch is opened. Determine how long it takes for the capacitor to fully discharge and the voltage across the 6 kΩ resistor at $t = 275$ milliseconds (i.e., 75 milliseconds after the switch is opened).

The first step is to determine the Thévenin equivalent driving the capacitor. If we remove the capacitor and determine the open circuit voltage at those points, we see that it is just a voltage divider between the 24 volt source, the 6 kΩ resistor and the 1 kΩ resistor (the 3 kΩ resistor has no current through it and thus produces no voltage drop). This works out to 20.57 volts. The Thévenin resistance will be 3 kΩ in series with 1 kΩ || 6 kΩ, or roughly 3.857 kΩ. The equivalent charging circuit is drawn in Figure 8.4.8 .

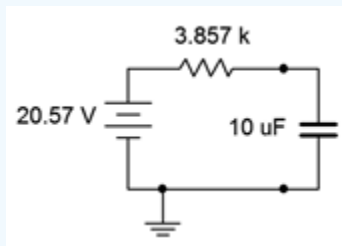

Figure 8.4.8 : Thévenin equivalent for the circuit of Figure 8.4.7 driving the capacitor.

We can now determine the charging time constant:

$$\tau_{charge} = RC$$

$$\tau_{charge} = 3.857k\Omega 10\mu F$$

$$\tau_{charge} = 38.57ms$$

Steady-state will be reached in 5 time constants, or 192.8 ms. Thus, we know that $V_C(0) = 0$ volts and $V_C(200ms) = 20.57$ volts. For the capacitor voltage at 100 milliseconds, we simply use the charge equation.

$$V_C(t) = E\left(1 - \epsilon^{-\frac{t}{\tau}}\right)$$

$$V_C(100ms) = 20.57V\left(1 - \epsilon^{-\frac{100ms}{38.57ms}}\right)$$

$$V_C(100ms) \approx 19.03V$$

For the discharge phase, we need to determine the time constant. With the voltage source removed, the capacitor will discharge through the now series combination of the 3 kΩ resistor and 6 kΩ resistor.

$$\tau_{discharge} = RC$$

$$\tau_{discharge} = 9k\Omega 10\mu F$$

$$\tau_{discharge} = 90ms$$

Steady-state will be reached 450 milliseconds later at $t = 650$ milliseconds. To find V_{6k} at $t = 275$ milliseconds, we can find the voltage across the capacitor and then perform a voltage divider between the 6 kΩ and 3 kΩ resistors. Remembering that $t = 275$ milliseconds is 75 milliseconds into the discharge phase, we have:

$$V_C(t) = E\epsilon^{-\frac{t}{\tau}}$$

$$V_C(75ms) = 20.57V\left(1 - \epsilon^{-\frac{75ms}{90ms}}\right)$$

$$V_C(75ms) \approx 8.94V$$

Finally, this voltage splits between the 6 kΩ and 3 kΩ resistors. Using the voltage divider rule, we find:

$$V_{6k} = V_C \frac{R_x}{R_x + R_y}$$

$$V_{6k} = 8.94V \frac{6k\Omega}{6k\Omega + 3k\Omega}$$

$$V_{6k} = 5.96V$$

Computer Simulation

In order to verify the analysis of Example 8.4.3 , the circuit of Figure 8.4.7 is entered into a simulator, as shown in Figure 8.4.9 . In place of a DC source, a pulse generator is used to mimic the on-off nature of the switch. This starts starts at zero volts and then immediately jumps up to 24 volts. It stays at this level for 200 milliseconds before returning back to zero. This is sufficient time to check whether or not the capacitor voltage has reached steady-state (predicted to take 192.8 milliseconds).

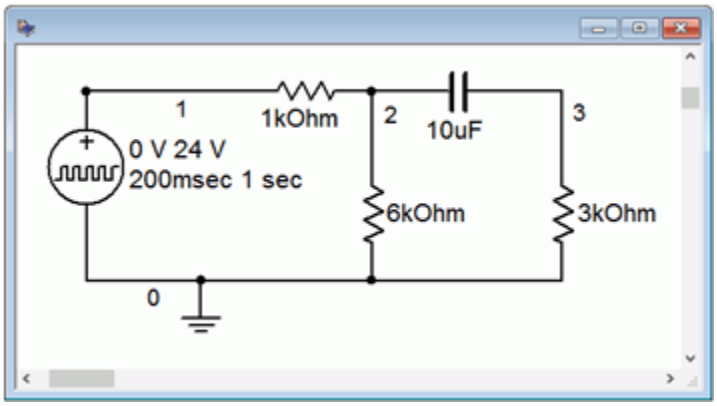

Figure 8.4.9 : Circuit of Figure 8.4.7 in a simulator.

A transient analysis is run on this circuit, plotting the capacitor voltage (i.e., the difference between the node 2 and node 3 voltages). The result is shown in Figure 8.4.10 . This plot confirms nicely the charge phase of the capacitor. After approximately 200 milliseconds, the voltage has leveled out at just over 20 volts, precisely as predicted.

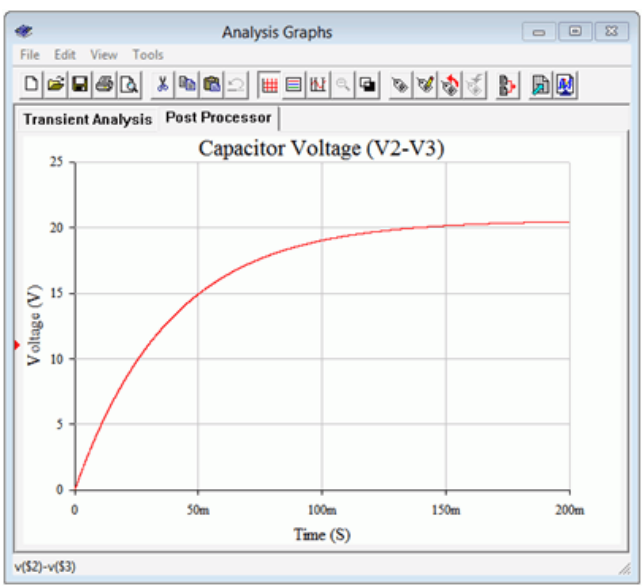

Figure 8.4.10 : Simulation results for the charge phase of the circuit of Figure 8.4.7 .

What about the discharge phase? In order to investigate that portion, the simulation circuit is modified. The pulse voltage source

is disconnected from the remainder of the circuit, just as it would be if the switch in Figure 8.4.7 had been opened again. Also, the capacitor is modified to have an initial voltage of 20.57 volts, the precise value at had reached after it attained steady-state. A second transient analysis is run, again plotting the capacitor voltage. The results of this simulation are shown in Figure 8.4.11 . It is worth noting that the time axis is relative to the switch being opened, not the original timing. That is, the horizontal origin of 0 milliseconds corresponds to $t = 200$ milliseconds.

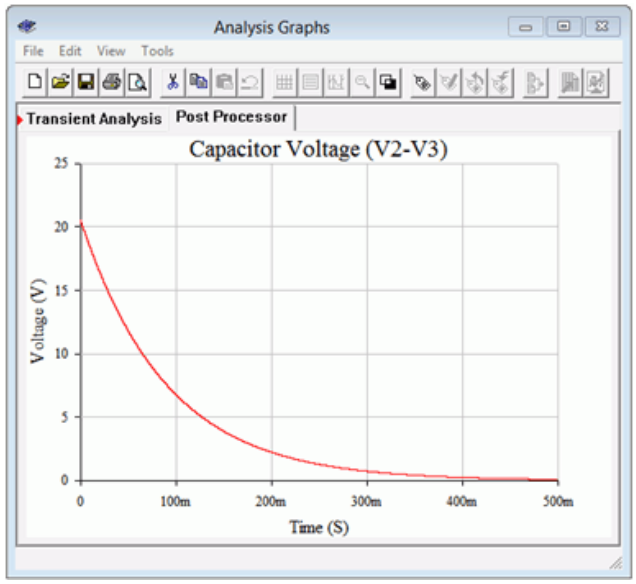

Figure 8.4.11 : Simulation results for the discharge phase of the circuit of Figure 8.4.7 .

Note that the time required to reach the new steady-state value of zero volts has stretched out to some 450 milliseconds after the switch is opened, precisely as predicted.

At this point, a fair question to ask is, “Couldn't we leave the pulse source in place in order to investigate the discharge phase?” Although the pulse source does go back down to zero volts at $t = 200$ milliseconds, that's not the same as opening the switch back in Figure 8.4.7 . If the source is still connected but producing zero volts, it becomes part of the Thévenin equivalent. As such, the 1 kΩ resistor is back in the circuit, producing a discharge time constant identical to the charge time constant.

To prove the point, the simulation is run again. The pulse remains at 24 volts for 200 milliseconds and then jumps down to zero, as before. The simulation time is extended out to 400 milliseconds total, enough to see both the charge and discharge phases. Further, instead of just plotting the capacitor voltage; the voltages of the source (blue trace, node 1), the 6 kΩ resistor (green trace, node 2) and the 3 kΩ resistor (red trace, node 5) are plotted. The results are shown in Figure 8.4.12 .

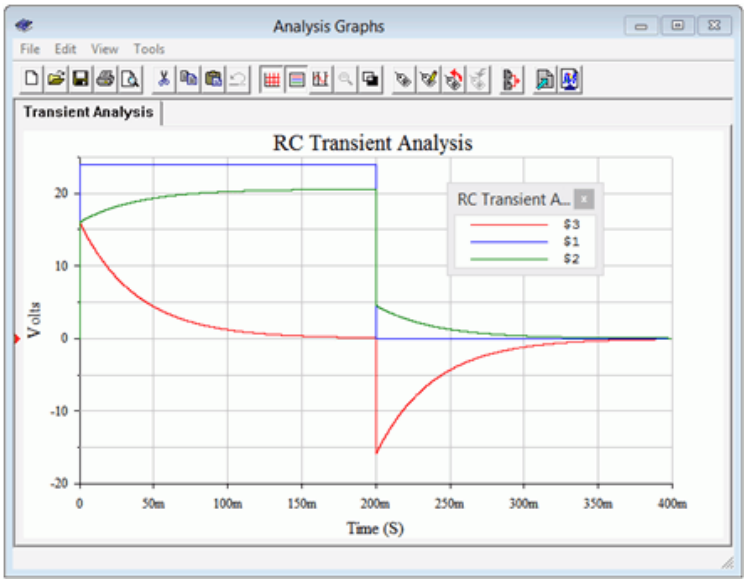

Figure 8.4.12 : Simulation results using pulse voltage source for discharge phase.

The first item to note is that steady-state appears to be reached in just under 200 milliseconds for both the charge and discharge phases, as expected. Second, note that the node 2 voltage (green) minus the node 3 voltage (red) starts at zero and winds up at a little over 20 volts at 200 milliseconds. This is, of course, the capacitor voltage, but what is interesting here is that this plot shows how the voltage across the 3 kΩ resistor shrinks as the capacitor voltage grows, the sum equaling the node 2 voltage. This makes perfect sense because, as the capacitor voltage increases, the current through it must be decreasing, and as this same current is flowing through the 3 kΩ resistor, the resistor's voltage must also be decreasing due to Ohm's law.

The other interesting part of this plot is what happens at 200 milliseconds when the source goes back to zero. Note that the node 3 voltage immediately jumps to a negative value. This is because the voltage across the capacitor cannot change instantaneously. It must still have 20.57 volts across it the instant the source goes back to zero. In this situation, because the source is essentially a short, the capacitor winds up in series with the 3 kΩ resistor and the parallel combination of the 1 kΩ and 6 kΩ resistors, or about 857 Ω. Calculating the voltage divider between the 3 kΩ and 857 Ω resistors with 20.57 volt source shows the 3 kΩ resistor receiving approximately 16 volts. Further, the discharge current will be flowing out of the capacitor in a counterclockwise direction, meaning it flows from ground up through the 3 kΩ resistor. Thus, we expect node 3 to be at approximately –16 volts, which is precisely what the plot indicates. How cool is that?

What if we didn't wait for steady-state? How would these plots change? Essentially, the trajectories of the curves would not change. After all, how would the circuit “know” that the switch would open early or the pulse would flip prematurely?

What happens is that the curves are followed to the point in time where the circuit is interrupted. From there, the next phase occurs with the present voltages as the starting points. To test this, the simulation is run yet again, but this time the source pulse width is shortened to just 50 milliseconds, well short of steady-state. The results of the simulation are shown in Figure 8.4.13 .

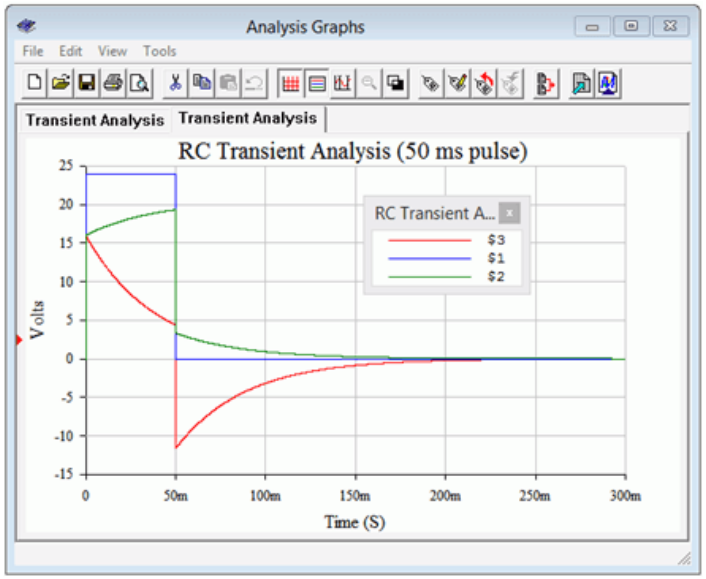

Figure 8.4.13 : Simulation results for interrupted discharge phase using pulse voltage source.

Comparing the plot of Figure 8.4.13 to that of Figure 8.4.12 shows that the two are identical up to 50 milliseconds. At that point, the input pulse returns to zero and the capacitor begins to discharge. The shapes and timings of the node 2 and node 3 voltages are the same as they were in Figure 8.4.12 , however, the amplitudes are reduced. This is because the capacitor did not have time to reach the steady-state voltage of 20.57 volts. In fact, it only reaches about 14.94 volts using Equation 8.4.3. Applying the voltage divider on this potential as before shows that the 3 kΩ resistor should jump to approximately −11.6 volts, which is confirmed by the simulation.

This page titled 8.4: Transient Response of RC Circuits is shared under a CC BY-NC-SA 4.0 license and was authored, remixed, and/or curated by James M. Fiore via source content that was edited to the style and standards of the LibreTexts platform.

8.5: Summary

The capacitor is a device that is used to store electric charge. Capacitance, C, is measured in farads, F. The idealized device consists of two conductive plates separated by some distance, that space being filled by an insulating dielectric. Capacitance is directly proportional to the plate area and the dielectric's permittivity, and inversely proportional to the plate distance. Another important characteristic of the dielectric is its breakdown strength. Along with the plate spacing, this will establish the capacitor's voltage rating. The permittivity will also help to determine the capacitor's volumetric efficiency, a measure of how much capacitance can be achieved within a given volume. Non-ideal parameters include the ESR, or equivalent series resistance, which is ideally zero; and the effective parallel leakage resistance, ideally infinity. Absolute accuracy, temperature stability and similar parameters round out the distinguishing features of one kind of capacitor against another. When placed in parallel, capacitors add in the same manner as resistors in series. When placed in series, capacitors behave like resistors in parallel.

Perhaps the most important operational characteristic regarding capacitors is that voltage across a capacitor cannot change instantaneously. It will take some finite amount of time before the charge on the capacitor builds, leading to a predictable rise in voltage across it. Because of this, for DC circuits capacitors initially behave like shorts, but after sufficient time has passed, they behave like opens. The amount of time required to reach steady-state is five time constants, where one time constant is defined as the product of the circuit's effective resistance and its capacitance. The current charge curve is of the shape ε^{-t}. The current starts at a maximum and eventually approaches zero as time passes. The corresponding voltage shape is of the form $1-\varepsilon^{-t}$. Here, the capacitor's voltage starts at zero and rises to some maximum value. The capacitor's voltage discharge curve effectively is swapped compared to the charge curve (e.g. voltage follows ε^{-t}).

Review Questions

1. What are the physical characteristics of capacitors and how do they affect capacitance?

2. Define the voltage-current characteristic for capacitors.

3. What is meant by a capacitor's volumetric efficiency?

4. How do the permittivity and breakdown strength of the dielectric affect the overall capacitance and voltage rating?

5. How do capacitors combine when placed in series and how do they combine when placed in parallel?

6. Define the initial and steady-state behavior of capacitors.

7. Define time constant for an RC circuit.

8. Describe the charge and discharge characteristics of RC circuits.

This page titled 8.5: Summary is shared under a CC BY-NC-SA 4.0 license and was authored, remixed, and/or curated by James M. Fiore via source content that was edited to the style and standards of the LibreTexts platform.

8.6: Exercises

Analysis

1. For the circuit shown in Figure 8.6.1 , determine the effective capacitance.

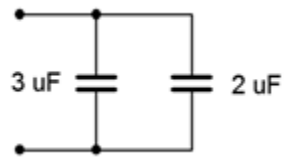

Figure 8.6.1

2. Determine the effective capacitance of the configuration shown in Figure 8.6.2 .

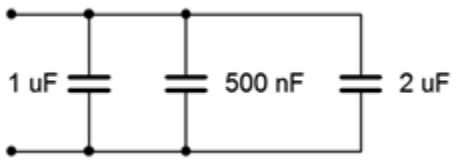

Figure 8.6.2

3. Given the capacitor network shown in Figure 8.6.3 , determine the effective value.

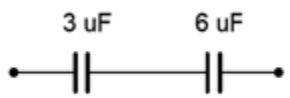

Figure 8.6.3

4. Determine the effective capacitance of network shown in Figure 8.6.4 .

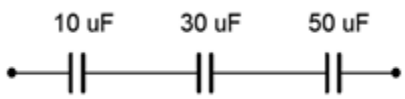

Figure 8.6.4

5. Determine the voltage across each capacitor for the circuit shown in Figure 8.6.5 .

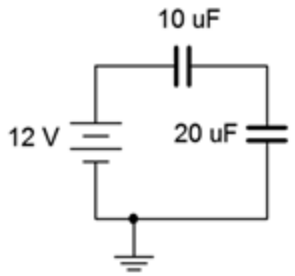

Figure 8.6.5

6. Determine the voltage across each capacitor for the circuit shown in Figure 8.6.6 .

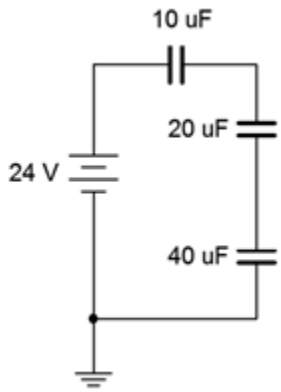

Figure 8.6.6

7. Determine the initial voltage across each component for the circuit shown in Figure 8.6.7 .

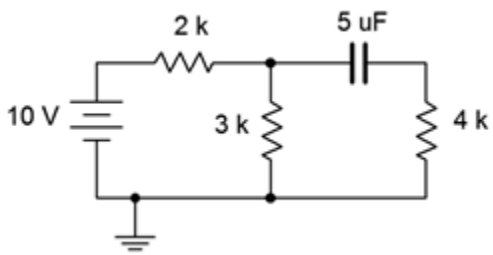

Figure 8.6.7

8. Given the network shown in Figure 8.6.7 , determine the steady-state voltage across each component.

9. For the circuit shown in Figure 8.6.8 , determine the capacitor voltage 3 microseconds after the power is switched on.

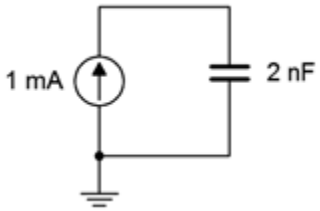

Figure 8.6.8

10. For the circuit shown in Figure 8.6.9 , determine the capacitor voltage 5 seconds after the power is switched on.

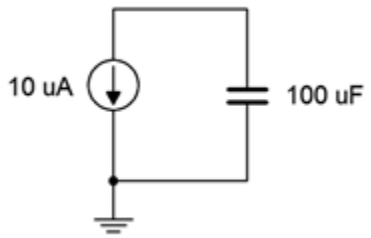

Figure 8.6.9

11. Determine the time constant and the time required to reach steady-state for the circuit shown in Figure 8.6.10 .

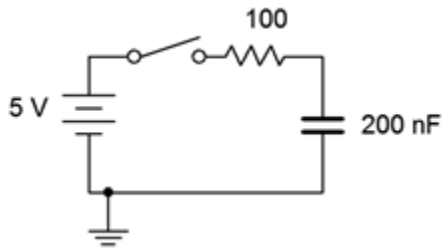

Figure 8.6.10

12. For the circuit shown in Figure 8.6.10 , determine the capacitor voltage and circulating current 20 microseconds and 100 milliseconds after the switch is thrown.

13. Given the circuit shown in Figure 8.6.11 , determine the capacitor voltage and circulating current 200 milliseconds and 10 seconds after the switch is thrown.

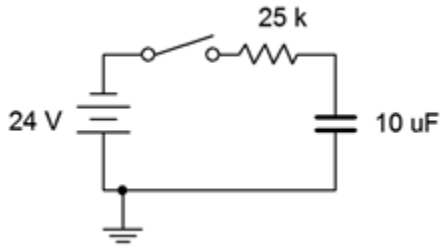

Figure 8.6.11

14. Determine the time constant and the time required to reach steady-state for the circuit shown in Figure 8.6.11 .

15. Determine the time constant and the time required to reach steady-state for the circuit shown in Figure 8.6.12 , switch position 1.

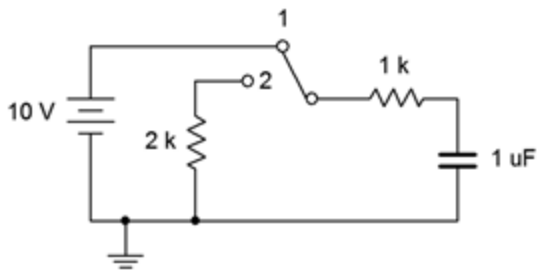

Figure 8.6.12

16. Determine the charge and discharge time constants for the circuit shown in Figure 8.6.13 .

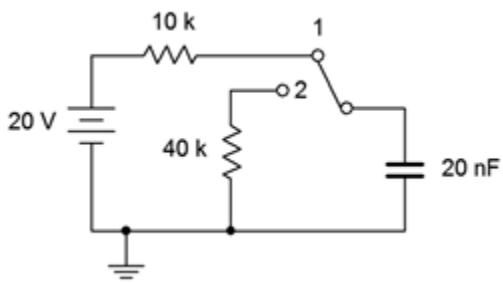

Figure 8.6.13

17. Given the circuit shown in Figure 8.6.12 , determine the capacitor voltage 10 milliseconds after the power is turned on. At this point, the switch is thrown to position 2. Determine how long it will take the capacitor to discharge to nearly zero volts.

18. For the circuit shown in Figure 8.6.13 , determine the capacitor voltage 400 microseconds after the power is turned on. At this point, the switch is thrown to position 2. Determine how long it will take the capacitor to discharge to nearly zero volts.

19. Determine the time constant and the time required to reach steady-state for the circuit shown in Figure 8.6.14 , switch position 1.

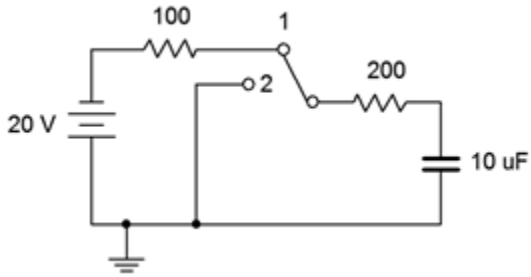

Figure 8.6.14

20. Given the circuit shown in Figure 8.6.14 , determine the capacitor voltage 12 milliseconds after the power is turned on. At this point, the switch is thrown to position 2. Determine how long it will take the capacitor to discharge to nearly zero volts.

Design

21. Given the circuit of Figure 8.6.10 , determine a new resistor value such that steady-state is reached in 2 milliseconds.

22. Given the circuit of Figure 8.6.11 , determine a new resistor value such that steady-state is reached in 5 seconds.

23. When an audio amplifier is turned on, the power surge can cause an audible pop from the loudspeaker. To prevent this, amplifiers often connect to the loudspeaker via a relay. The relay is energized to connect the loudspeaker once the output has settled, typically a few seconds after power is applied. This delay may be created via an RC network. Suppose the driving circuit is 5 volts and the relay trips at 4 volts. Further, the associated charging resistance is 10 kΩ. Determine the capacitance required to achieve a 2 second delay time.

Challenge

24. Determine the time constant and the time required to reach steady-state for the circuit shown in Figure 8.6.15 .

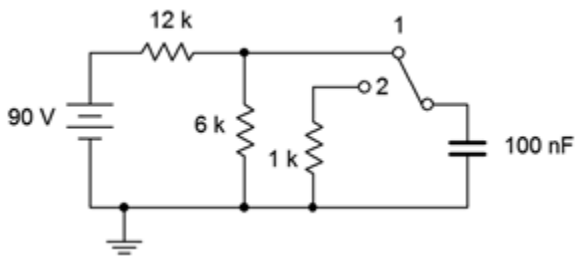

Figure 8.6.15

25. For the circuit shown in Figure 8.6.15 , determine the capacitor voltage 1 second after the power is turned on. At this point, the switch is thrown to position 2. Determine how long it will take the capacitor to discharge to nearly zero volts.

Simulation

26. Perform a transient analysis to verify the time to steady-state of Figure 8.6.10 (problem 11).

27. Perform a transient analysis to verify the time to steady-state of Figure 8.6.11 (problem 14).

28. Use a transient analysis to verify the design of problem 21.

29. Use a transient analysis to verify the design of problem 22.

30. Use a transient analysis to verify the operation of the circuit shown in Figure 8.6.15 as specified in problem 25. You may wish to do this as two separate simulations, one for each switch position, with the second position using a pre-charged capacitor.

This page titled 8.6: Exercises is shared under a CC BY-NC-SA 4.0 license and was authored, remixed, and/or curated by James M. Fiore via source content that was edited to the style and standards of the LibreTexts platform.

9: INDUCTORS

Learning Objectives

After completing this chapter, you should be able to:

- Describe the theoretical and practical aspects of inductor construction.
- Describe the current-voltage characteristic behavior of inductors.
- Utilize component data sheets to determine operating characteristics of inductors.
- Determine the initial and steady-state equivalents of resistor-inductor networks.
- Determine the initial and steady-state equivalents of resistor-capacitor-inductor networks.
- Determine the transient response of basic RL networks.

9.1: Introduction

9.2: Inductance and Inductors

9.3: Initial and Steady-State Analysis of RL Circuits

9.4: Initial and Steady-State Analysis of RLC Circuits

9.5: Transient Response of RL Circuits

9.6: Summary

9.7: Exercises

This page titled 9: Inductors is shared under a CC BY-NC-SA 4.0 license and was authored, remixed, and/or curated by James M. Fiore via source content that was edited to the style and standards of the LibreTexts platform.

9.1: Introduction

This chapter introduces our third passive device, the inductor. Inductors are fundamentally different from both resistors and capacitors in terms of their construction and their operation. Inductors do, however, share certain broad traits with capacitors. First, they are energy storage devices. In the case of the inductor, energy is stored in a magnetic field, similar to the case of the capacitor which utilizes an electric field. Further, in the ideal case, inductors do not dissipate power. Also like capacitors, when inductors are placed in DC circuits they are not ohmic, meaning that their current-voltage characteristic does not respond to Ohm's law. Instead, their currentvoltage characteristic is dynamic in nature. In some respects, though, their current-voltage behavior is opposite to the way in which capacitors behave, and thus they offer their own unique performance characteristics.

Inductors have a long history of use in electronic systems. In fact, one of the most common uses in the home is as an integral part of a typical loudspeaker system. They are used in modern switch-mode DC power supplies in products such as personal computers and televisions. In audio and communications systems they are used in filters and tuning circuits alongside capacitors. Like a capacitor, for any application that needs to smooth out a varying voltage, store energy or filter a signal; an inductor is a likely candidate.

Unfortunately, real-world inductors generally do not behave as close to their desired ideal operation as do realworld capacitors. The secondary effects of inductor construction limit their performance; perhaps the most notable factor being their potentially large equivalent series resistance. They are also susceptible to external magnetic fields which can introduce noise and interference, degrading signal quality. For these reasons, there are areas where, given a choice, capacitors would be preferred over inductors. But this is by no means a broad condemnation and there are areas where the use of inductors is essential. Beyond this, the very concept of inductance is important in that informs designers of the practical limits of performance of their circuits.

The concept of electromagnetic induction was first discovered by English scientist Michael Faraday in the early 19th century. He noticed that if he wrapped two wires around an iron ring and introduced a current in one of them, then a transient (shortlived) current would appear in the second coil of wire. He noticed a similar effect when he slid a bar magnet through a wire coil. Around the same time, American Joseph Henry discovered much the same independently of Faraday and performed considerable research in this area. In his honor, the unit of inductance, the henry (abbreviated H), is named after him. The symbol for inductance is L, named after physicist Heinrich Emil Lenz. Inductors are commonly referred to as coils or chokes, for reasons that will be apparent shortly

This page titled 9.1: Introduction is shared under a CC BY-NC-SA 4.0 license and was authored, remixed, and/or curated by James M. Fiore via source content that was edited to the style and standards of the LibreTexts platform.

9.2: Inductance and Inductors

To begin, we need to examine the interrelation between electric current and magnetic fields in a conductor. When a current passes through a conductor, such as a wire, a magnetic field is created around the conductor that is proportional to the strength of the current. This is illustrated in Figure 9.2.1 .

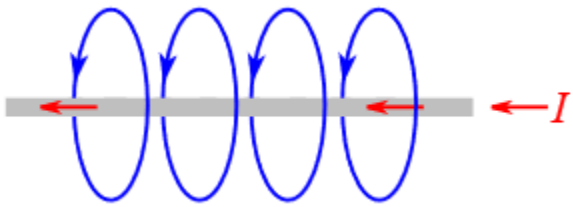

Figure 9.2.1 : Magnetic field around a conductor.

The magnetic field can be thought of as sets of concentric rings around the conductor, although for clarity only single loops are drawn in the Figure. The number of magnetic lines in a given area is known as the magnetic flux and is given the symbol Φ (the Greek letter phi). The unit of magnetic flux is the weber, Wb, named after Wilhelm Weber, a 19th century German physicist.

$$\text{Magnetic flux} \equiv \text{the number of magnetic lines enclosed in a given area.} \tag{9.2.1}$$

Note that the magnetic field runs the length of the conductor. The direction of the field lines follows the right hand rule: if you grasp the wire with your right hand such that your thumb is pointing in the direction of conventional current flow, then your fingers wrap in the direction of the magnetic field. This rule is illustrated in Figure 9.2.2 .

Figure 9.2.2 : Right hand rule. Image source (modified)

If we form the conductor into a loop, the field lines are corralled into the center of the loop. This is illustrated in Figure 9.2.3 . In this diagram it can be seen that the lines effectively collect in the center, going into the page.

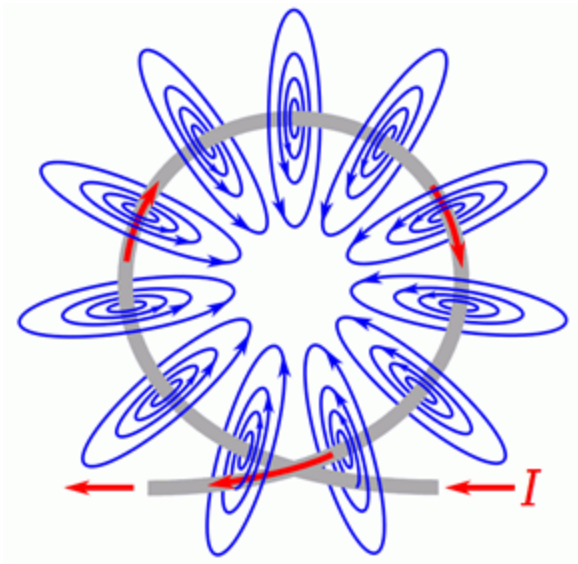

Figure 9.2.3 : Magnetic field around a loop.

The enhancement effect can be magnified by adding more loops in tandem. This is known as a solenoid and is shown in Figure 9.2.4 . It is the most basic form of an inductor.

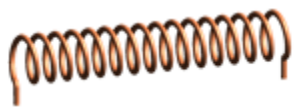

Figure 9.2.4 : Solenoid.

The concentrating effect of the magnetic field is shown in Figure 9.2.5 . In this figure, the coil is shown from the side, as a cross-section of the individual loops. The dots inside the conductors indicate that the current is flowing toward you, out of the page; while the the crosses indicate that the current is flowing into the page. The lines of flux exit out the right, loop around, and reenter from the left. Due to limited space, the entire loop for each line is not drawn, and it is important to remember that magnetic flux lines do not end, but always create a loop. Further, although it is shown as a plane here, this field is three dimensional, with lines looping back into the page as well as in front of it.

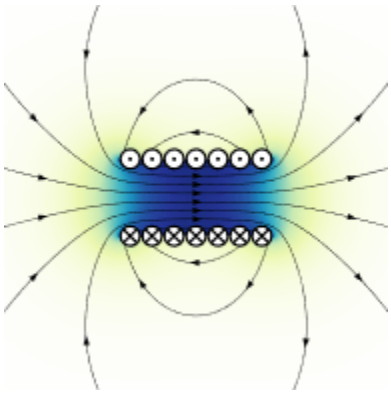

Figure 9.2.5 : Magnetic field in a solenoid. Image source

This is how electromagnets can be created[1]. The north pole is the exiting end (right side) of Figure 9.2.5 while the south pole is the entering end (left side).

If the current changes, there will be a commensurate change in the magnetic field. Further, this change in the field will induce a current in the conductor that creates a magnetic field that opposes the original change in the field. This is known as Lenz's law.

Alternately, it can be stated that the induced current caused by a changing magnetic field will oppose the change in the original current that created that change in the original magnetic field.

At this point we can offer a proper definition of the weber:

$$1 \text{ weber } \equiv \text{ the magnetic flux that, acting on a single loop of a conductor, produces a potential of 1 volt if the flux is reduced}$$

In magnetic circuits we are also interested in the magnetic flux density which is the magnetic flux per unit area. The symbol for flux density is B and has units of teslas (T), named after Nicola Tesla, the Serbo-Croatian-American engineer and inventor. One tesla is defined as one weber per square meter.

$$1 \text{ tesla } \equiv 1 \text{ weber/meter}^2 \tag{9.2.3}$$

To provide a reference, the magnetic flux density of the Earth near the equator is approximately 31 μT, while the value of the voice coil gap in a loudspeaker is around 1 to 2 T, with medical MRI scanners being a little higher still.

Finally, we come to the definition of inductance and its unit, the henry:

$$\text{Inductance is a measure of the tendency of a conductor to oppose a change in the current flowing through it.} \tag{9.2.4}$$

$$1 \text{ henry } \equiv 1 \text{ weber/1 amp} \tag{9.2.5}$$

Unsurprisingly, the energy stored in the magnetic field of an inductor is proportional to the inductance. It is also proportional to the square of the current through the inductor.

$$W = \frac{1}{2} L I^2 \tag{9.2.6}$$

Where

W is the energy in joules,

L is the inductance in henries,

I is the current in amps.

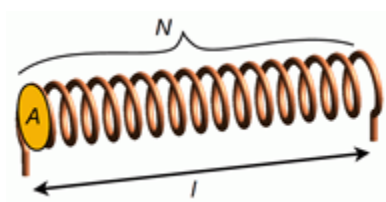

Figure 9.2.6 : Simple air-core inductor dimensions.

An inductor in its simplest form consists of a series of wire loops. These might be wound around an iron core, although a non-ferrous core might also be used. For a simple single layer inductor, such as the one drawn in Figure 9.2.6 , the inductance is described by the following formula:

$$L = \mu \frac{A N^2}{l} \tag{9.2.7}$$

Where

L is the inductance in henries,

μ is the permeability of the core material,

A is the cross sectional area of the coil,

N is the number of coils or turns,

l is the length of the coil.

Inductors may also be wound using multiple layers or around a toroidal core, and these designs utilize alternate formulas.

Inductor Styles and Packaging

Equation 9.2.7 indicates that, in order to achieve high inductance, we would like a core with high permeability, permeability being a measure of how easy it is to establish magnetic flux in said material. Substances such as iron or ferrite have a much greater permeability than air and are used commonly for cores. They do have a disadvantage in that they will saturate sooner than an air core, and this can lead to distortion.

Figure 9.2.7 : Electric bass guitar pickup.

Another approach is to pack as many turns as is possible within a given length. One way to do this is to minimize the thickness of the insulation around the wire[2]. This can be achieved by using a thin enamel coating instead of the typical plastic insulation. A second method is to use a very fine wire. This leads to two problems, namely an undesirable increase in equivalent series resistance (known colloquially as coil resistance or R_{coil}), and limited current carrying capacity. All of these effects have to be balanced in order to achieve the best performance for a given application.

Commercial inductors range in value from a fraction of a nanohenry for small surface mount “chip” inductors up to several henries. Some devices exhibit large internal inductances even though they are not specifically used as inductors. One common example is a transformer. Another example is an electric guitar or bass pickup, such as the one shown in Figure 9.2.7 with its cover removed. Units such as this may be constructed of several thousand turns of very fine wire (typically AWG 41 to 44) and achieve inductances in excess of one henry.

A variety of inductors is shown in Figure 9.2.9 , all of which are of the through-hole type (surface mount inductors do not appear considerably different from their surface mount resistor and capacitor cousins).

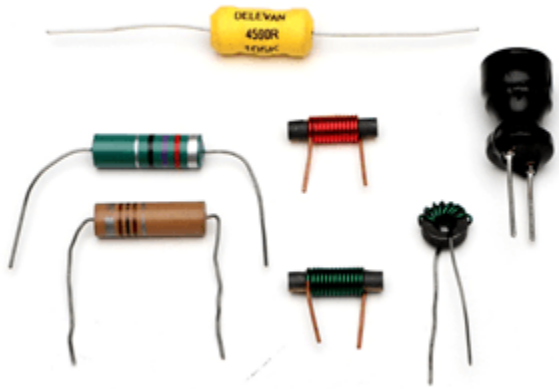

Figure 9.2.9 : A collection of inductors.

The two units toward the left are molded inductors and use a standard color code, similar to the ones used for resistors and capacitors. The unit at the top (yellow) is a high current inductor that features low R_{coil}. The three inductors in the center use obvious ferrite cores, two wound on straight cores and the third wound on a toroidal core. The unit to the right uses a high permeability material at the very top and is wrapped in a plastic sheath for protection. Variable inductors are also a possibility

and can be made by using a ferrite core that can be slid within the coils, effectively changing the permeability of the core (part ferrite, part air).

Figure 9.2.10 : Inductor schematic symbols (top-bottom): standard, variable, iron/ferrite core.

The schematic symbols for inductors are shown in Figure 9.2.10 . The standard symbol is at the top. The variable inductor symbol is in the middle and is a twolead device, somewhat reminiscent of the symbol for a rheostat. At the bottom is the symbol for an inductor with an iron, ferrite, or similar high permeability core. In general, like resistors, single inductors are not polarized and cannot be inserted into a circuit backwards. There are, however, special applications where multiple coils can be wound on a common core, and for these, the polarity of their interconnection can make a difference.

Inductor Data Sheet

A portion of an inductor data sheet is shown in Figure 9.2.12 . This page lists the available sizes of this particular model, each with corresponding quantities. We can see this model is available in inductance values ranging from 1 μH up to 100 mH. Tolerance of the smaller values is $\pm$10% while values at and above 33 μH are at $\pm$5%. Q is the quality factor and is particularly important in AC circuits (higher being better), along with its associated frequency, f_Q. Continuing across we find I_R. This is the maximum rated current. For the smaller values, we find they can withstand in excess of 2 amps while the larger units can withstand only tens of milliamps.

TDK

RF chokes B82144A

LBC series, 5.2 x 12 (mm)

Characteristics and ordering codes

L_R µH	Tolerance 1)	Q_{min}	f_Q MHz	I_R mA	R_{max} Ω	$f_{res,min}$ MHz	Ordering code (reel packing)2)
1.0	±10% ≙ K	40	7.96	2200	0.08	200	B82144A2102K000
1.5		40	7.96	2100	0.09	190	B82144A2152K000
2.2		40	7.96	1900	0.11	140	B82144A2222K000
3.3		40	7.96	1750	0.13	120	B82144A2332K000
4.7		40	7.96	1600	0.16	100	B82144A2472K000
6.8		40	7.96	1500	0.19	80	B82144A2682K000
10		60	2.52	1400	0.22	60	B82144A2103K000
15		60	2.52	1250	0.28	20	B82144A2153K000
22		50	2.52	1100	0.35	12	B82144A2223K000
33	±5% ≙ J	40	2.52	900	0.43	8.0	B82144A2333J000
47		40	2.52	800	0.50	5.0	B82144A2473J000
68		30	2.52	700	0.60	4.5	B82144A2683J000
100		50	0.796	600	0.70	3.5	B82144A2104J000
150		50	0.796	500	0.90	3.0	B82144A2154J000
220		50	0.796	400	1.60	2.4	B82144A2224J000
330		50	0.796	330	1.90	2.0	B82144A2334J000
470		40	0.796	280	2.50	1.5	B82144A2474J000
680		30	0.796	240	2.80	1.3	B82144A2684J000
1000		60	0.252	200	3.80	1.2	B82144A2105J000
1500		60	0.252	160	6.00	1.0	B82144A2155J000
2200		60	0.252	120	9.00	0.8	B82144A2225J000
3300		60	0.252	110	12.0	0.6	B82144A2335J000
4700		60	0.252	90	20.0	0.5	B82144A2475J000
6800		60	0.252	80	30.0	0.4	B82144A2685J000
10000		50	0.0796	60	42.0	0.35	B82144A2106J000
15000		50	0.0796	50	68.0	0.30	B82144A2156J000
22000		50	0.0796	40	120	0.26	B82144A2226J000
33000		50	0.0796	35	150	0.22	B82144A2336J000
47000		40	0.0796	30	230	0.18	B82144A2476J000
68000		40	0.0796	25	290	0.15	B82144A2686J000
100000		30	0.0796	20	420	0.12	B82144A2107J000

Figure 9.2.12 : Inductor data sheet. Courtesy of TDK

Finally, we come to R_{max}. This is also known as R_{coil}. It represents the equivalent series resistance of the inductor. In general, smaller is better. For this model, it ranges from a fraction of an ohm to a few hundred ohms. This trend is typical of inductors; all else being equal, the larger the inductance, the larger the value of the associated series resistance. In many circuits, the value of R_{coil} cannot be ignored.

Inductors in Series and in Parallel

Suppose we take two identical inductors and place them in series. This effectively doubles both the length and the number of loops. From Equation 9.2.7 we can see that doubling both the number of loops and the length would double the inductance. This is because N^2 goes up by a factor of four which is then halved be the increased length. Consequently, inductors in series add values just like resistors in series. By extension, inductors in parallel behave like resistors in parallel. The equivalent of parallel inductors can be found by using either the product-sum rule or by taking the reciprocal of the sum of their reciprocals.

Example 9.2.1

Find the equivalent inductance of the network shown in Figure 9.2.11 .

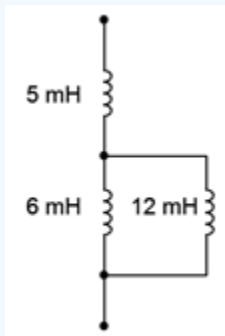

Figure 9.2.11 : Circuit for Example 9.2.1 .

The 6 mH and 12 mH inductors are in parallel. The equivalent value of the pair is:

$$L_{parallel} = \frac{L_2 L_3}{L_2 + L_3}$$

$$L_{parallel} = \frac{6mH12mH}{6mH + 12mH}$$

$$L_{parallel} = 4mH$$

This combination is in series with the 5 mH inductor. Therefore the total equivalent inductance is 4 mH + 5 mH, or 9 mH.

Current-Voltage Relationship

The fundamental current-voltage relationship of the inductor is the mirror image of that of the capacitor:

$$v = L\frac{di}{dt} \tag{9.2.8}$$

This states that the voltage across the inductor is a function of how quickly the current is changing. If the current is not changing (i.e., in steady-state), then the voltage across the inductor is zero. In this case, the inductor behaves like a short, or more accurately, like its R_{coil} value. In contrast, during a rapid initial current change, the inductor voltage can be large, and thus the inductor behaves like an open.

If we rearrange Equation 9.2.8 and solve for the rate of change of current, we find that:

$$\frac{di}{dt} = \frac{v}{L} \tag{9.2.9}$$

Thus if an inductor is fed by a constant voltage source, the current will rise at a constant rate equal to v/L. For example, considering the circuit in Figure 9.2.11 , we see a voltage source feeding a single inductor. If we were to plot the inductor's current

over time, we would see something like the graph of Figure 9.2.12 .

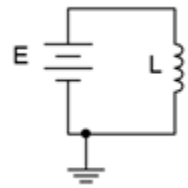

Figure 9.2.11 : Inductor with voltage source.

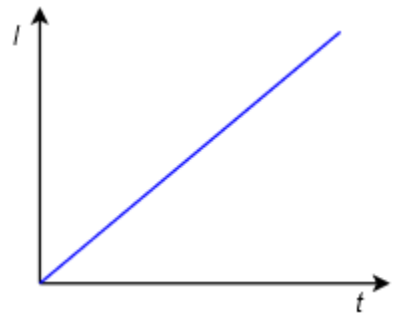

Figure 9.2.12 : Inductor current versus time.

As time progresses, the current through the inductor increases, flowing from top to bottom. With a theoretically perfect inductor and source, this would continue as long as the circuit was energized. In reality, this line would either begin to deflect horizontally as the source reached its limits, or the inductor would fail once its maximum current or power handling was reached. The slope of this line is dictated by the size of the applied voltage source and the inductance.

Example 9.2.2

Determine the rate of change of current through the inductor in the circuit of Figure 9.2.13 . Also determine the inductor's current 10 microseconds after power is switched on.

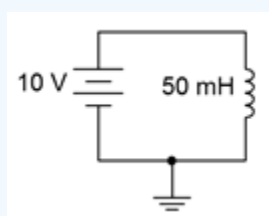

Figure 9.2.13 : Circuit for Example 9.2.2 .

From Equation 9.2.9, the rate of change of current is:

$$\frac{di}{dt} = \frac{v}{L}$$

$$\frac{di}{dt} = \frac{10V}{50mH}$$

$$\frac{di}{dt} = 200A \text{ per second}$$

In other words, for every second, the current rises another 200 amps. Thus, after just 10 microseconds it will have risen to 200 A/s times 10 μs, or 2 mA.

Equation 9.2.8 is key to understanding the behavior of inductors. As noted previously, if an inductor is driven by a fixed voltage source and ignoring R_{coil}, the current through it rises at the constant rate of v/L. This change in current through the inductor is not limitless. An instantaneous change requires that di/dt is infinite, and thus, the voltage driving the inductor would also have to be infinite, which is a clear impossibility. Therefore we can state a particularly important characteristic of capacitors:

$$\text{The current through an inductor cannot change instantaneously.} \tag{9.2.10}$$

This observation will be central to analyzing the operation of inductors in DC circuits.

References

[1]Truly one of the coolest inventions of all time: a magnet with an on/off switch.

[2]The wound wire must be insulated otherwise each loop will short to the loops next to it and we'd be left with a tube instead of a series of loops.

This page titled 9.2: Inductance and Inductors is shared under a CC BY-NC-SA 4.0 license and was authored, remixed, and/or curated by James M. Fiore via source content that was edited to the style and standards of the LibreTexts platform.

9.3: Initial and Steady-State Analysis of RL Circuits

When analyzing resistor-inductor circuits, remember that current through an inductor cannot change instantaneously as this would require an infinite voltage source. When a circuit is first energized, the current through the inductor will still be zero, which is characteristic of opens. Once at steady-state, the current has leveled out and therefore the voltage across the inductor will approach zero, which is characteristic of shorts. Thus, we can state the general behavior of inductors at the beginning and ending of the charge cycle:

$$\text{For DC analysis, initially inductors appear as opens.} \tag{9.3.1}$$

$$\text{At steady-state, inductors appear as shorts.} \tag{9.3.2}$$

This is the opposite of what was seen with capacitors. For example, in the circuit of Figure 9.3.1 , initially L is open, leaving us with R_1 and R_2 in series with the source, E. At steady-state, L shorts out, leaving R_1 in series with the parallel combination of R_2 and R_3. All practical inductors will exhibit some internal resistance, so it is often best to think of an inductor as an ideal inductance with a small resistance (R_{coil}) in series with it.

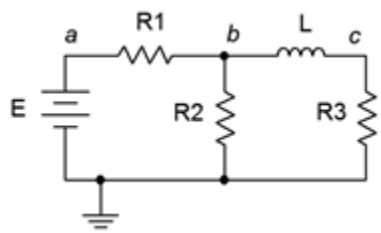

Figure 9.3.1 : Basic RL circuit.

Example 9.3.1

Assuming the initial current through the inductor is zero in the circuit of Figure 9.3.2 , determine the voltage across the 2 kΩ resistor when power is applied and after the circuit has reached steady-state. Draw each of the equivalent circuits.

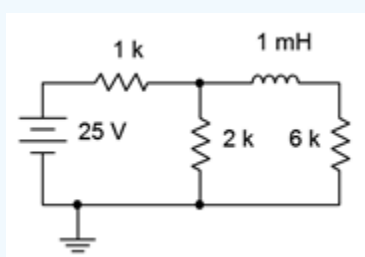

Figure 9.3.2 : Circuit for Example 9.3.1 .

First, we'll redraw the circuit for the initial-state equivalent. To do so, open the inductor. The new equivalent is shown in Figure 9.3.3 . By opening the inductor, the 6 kΩ resistor has been removed from the circuit and sees no voltage. What we are left with is a voltage divider between the source and the 1 kΩ and 2 kΩ resistors.

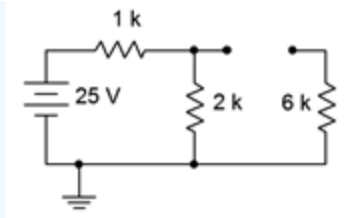

Figure 9.3.3 : Initial-state equivalent of the circuit of Figure 9.3.2 .

Using the voltage divider rule,

$$V_{2k} = E\frac{R_x}{R_x + R_y}$$

$$V_{2k} = 25V\frac{2k\Omega}{2k\Omega + 1k\Omega}$$

$$V_{2k} \approx 16.67V$$

For steady-state, we redraw using a short in place of the inductor, as shown in Figure 9.3.4 . Here we have another voltage divider, this time between the 1 kΩ resistor and the parallel combination of 2 kΩ and 6 kΩ, or 1.5 kΩ.

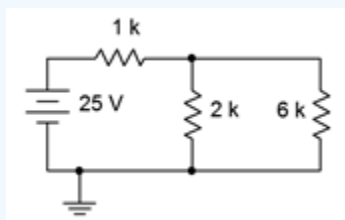

Figure 9.3.4 : Steady-state equivalent of the circuit of Figure 9.3.2 .

$$V_{2k} = E\frac{R_x}{R_x + R_y}$$

$$V_{2k} = 25V\frac{1.5k\Omega}{1.5k\Omega + 1k\Omega}$$

$$V_{2k} = 15V$$

Computer Simulation

To verify the results of Example 9.3.1 , the circuit is entered into a simulator as shown in Figure 9.3.5 . A DC operating point analysis is run and the results are shown in Figure 9.3.6 .

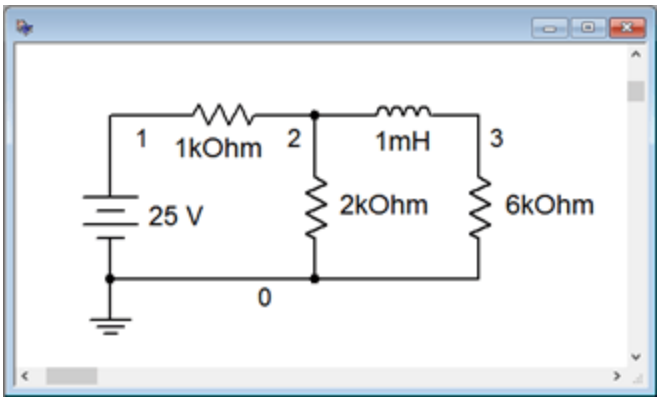

Figure 9.3.5 : Circuit of Figure 9.3.2 in a simulator.

The steady-state potential at node 2 corresponds to the voltage across the 2 kΩ resistor and agrees with the theoretical calculation of 15 volts. Note that node 3 is also 15 volts, indicating that the steady-state voltage across the inductor is zero, meaning it is behaving as a short, exactly as expected.

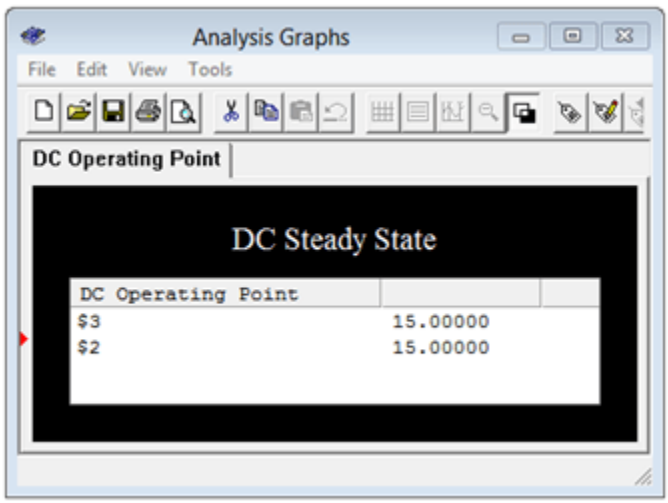

Figure 9.3.6 : Simulation results for the circuit of Figure 9.3.2 .

This page titled 9.3: Initial and Steady-State Analysis of RL Circuits is shared under a CC BY-NC-SA 4.0 license and was authored, remixed, and/or curated by James M. Fiore via source content that was edited to the style and standards of the LibreTexts platform.

9.4: Initial and Steady-State Analysis of RLC Circuits

When analyzing resistor-inductor-capacitor circuits, remember that capacitor voltage cannot change instantaneously, thus, initially, capacitors behave as a short circuit. Once the capacitor has been charged and is in a steady-state condition, it behaves like an open. This is opposite of the inductor. As we have seen, initially an inductor behaves like an open, but once steady-state is reached, it behaves like a short. For example, in the circuit of Figure 9.4.1 , initially L is open and C is a short, leaving us with R_1 and R_2 in series with the source, E. At steady-state, L shorts out both C and R_2, leaving all of E to drop across R_1. For improved accuracy, replace the inductor with an ideal inductance in series with the corresponding R_{coil} value. Similarly, practical capacitors can be thought of as an ideal capacitance in parallel with a very large (leakage) resistance.

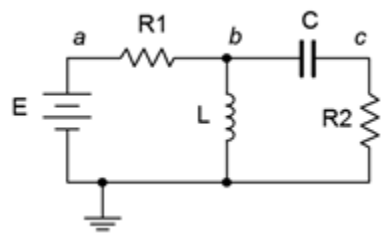

Figure 9.4.1 : Basic RLC circuit.

Example 9.4.1

Assuming the initial current through the inductor is zero and the capacitor is uncharged in the circuit of Figure 9.4.2 , determine the current through the 2 kΩ resistor when power is applied and after the circuit has reached steady-state. Draw each of the equivalent circuits.

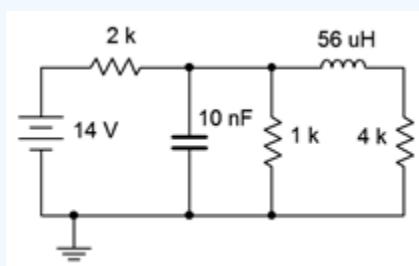

Figure 9.4.2 : Circuit for Example 9.4.1 .

For the initial-state equivalent we open the inductor and short the capacitor. The new equivalent is shown in Figure 9.4.3 . The shorted capacitor removes everything to its right from the circuit. All that's left is the source and the 2 kΩ resistor.

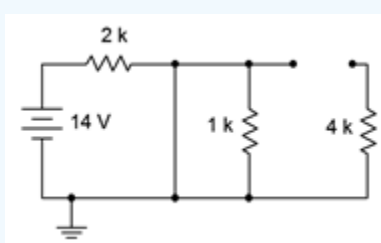

Figure 9.4.3 : Initial-state equivalent of the circuit of Figure 9.4.2 .

We can find the current through the 2 kΩ resistor using Ohm's law.

$$I_{2k} = \frac{E}{R}$$

$$I_{2k} = \frac{14V}{2k\Omega}$$

$$I_{2k} = 7mA$$

Steady-state is redrawn in Figure 9.4.4 , using a short in place of the inductor, and an open for the capacitor. We are left with a resistance of 2 kΩ in series with the parallel combination of 1 kΩ and 4 kΩ, or 2.8 kΩ in total.

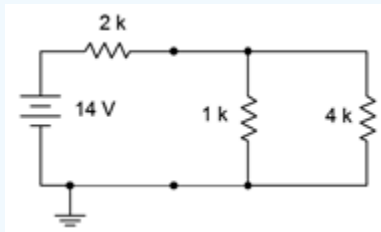

Figure 9.4.4 : Steady-state equivalent of the circuit of Figure 9.4.2 .

$$I_{2k} = \frac{E}{R}$$

$$I_{2k} = \frac{14V}{2.8k\Omega}$$

$$I_{2k} = 5mA$$

This page titled 9.4: Initial and Steady-State Analysis of RLC Circuits is shared under a CC BY-NC-SA 4.0 license and was authored, remixed, and/or curated by James M. Fiore via source content that was edited to the style and standards of the LibreTexts platform.

9.5: Transient Response of RL Circuits

The transient response of RL circuits is nearly the mirror image of that for RC circuits. To appreciate this, consider the circuit of Figure 9.5.1 .

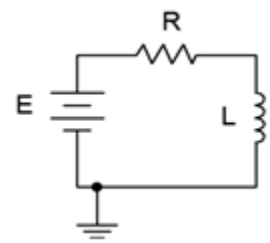

Figure 9.5.1 : RL circuit for transient response analysis.

Again, the key to this analysis is to remember that inductor current cannot change instantaneously. When power is first applied, the circulating current must remain at zero. Therefore no voltage drop is produced across the resistor, and by KVL, the voltage across the inductor must equal the source, E. This establishes the initial rate of change of current via Equation 9.2.9 $(di/dt = E/L)$ and is represented by the dashed red line in the graph of Figure 9.5.2 . As the current starts to increase, the voltage drop across the resistor begins to increase. This reduces the voltage available for the inductor, thus slowing the rate of change of current. This is depicted by the solid red curve on the graph. Meanwhile, the solid blue curve represents the decreasing inductor voltage. Thus, in the RL circuit, the inductor's voltage curve echoes the RC circuit's current curve (or resistor voltage curve), and the RL current curve echoes the RC circuit's capacitor voltage curve.

The curves presented in Figure 9.5.2 are identical to those presented in Chapter 8 when we discussed capacitors. They are reproduced here for your convenience.

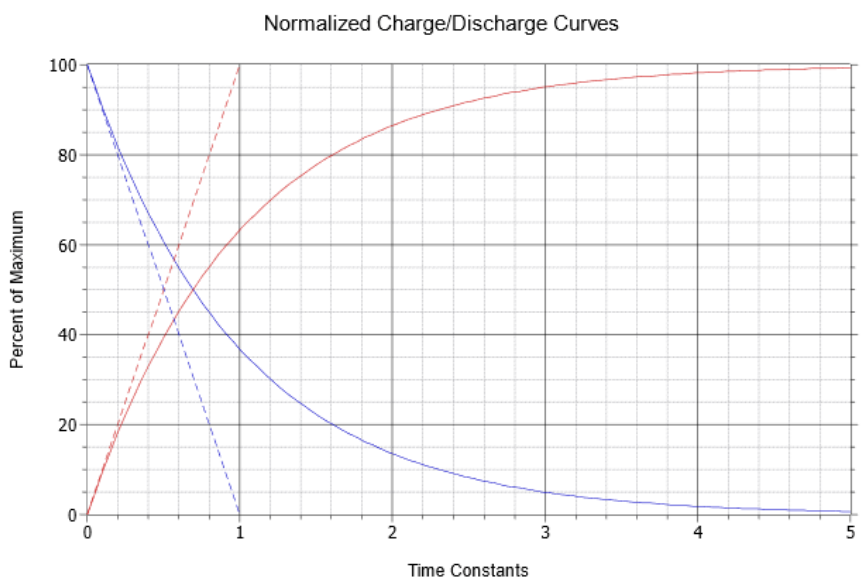

Figure 9.5.2 : Normalized charge and discharge curves.

As noted before, the rate of current change versus time is equal to v/L, and therefore in this case, E/L. If the initial rate of change were to continue unabated, the maximum (steady-state) current, E/R, would be reached in L/R seconds[1]. Therefore the time constant for an RL circuit is:

$$\tau = \frac{L}{R} \tag{9.5.1}$$

Once again, five constants will achieve steady-state.

Following the prior work on capacitors, the relevant equations for the RL circuit can be shown to be[2]:

$$V_L(t) = E\epsilon^{-\frac{t}{\tau}} \tag{9.5.2}$$

$$V_R(t) = E\left(1 - \epsilon^{-\frac{t}{\tau}}\right) \tag{9.5.3}$$

$$I(t) = \frac{E}{R}\left(1 - \epsilon^{-\frac{t}{\tau}}\right) \tag{9.5.4}$$

Where

$V_L(t)$ is the inductor voltage at time t,

$V_R(t)$ is the resistor voltage at time t,

$I(t)$ is the current at time t,

E is the source voltage,

R is the series resistance,

t is the time of interest,

τ is the time constant,

ε (also written e) is the base of natural logarithms, approximately 2.718.

Time for an example.

Example 9.5.1

Given the circuit of Figure 9.5.3 , assume the switch is closed at time $t = 0$. Determine the charging time constant, the amount of time after the switch is closed before the circuit reaches steady-state, and the inductor voltage and current at $t = 0$, $t = 2$ microseconds and $t = 1$ millisecond. Assume the inductor is initially uncharged.

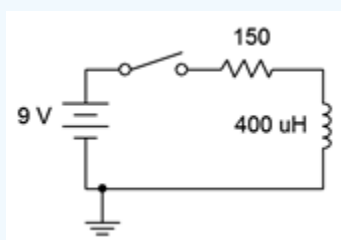

Figure 9.5.3 : Circuit for Example 9.5.1 .

First, the time constant:

$$\tau = \frac{L}{R}$$

$$\tau = \frac{400\mu H}{150\Omega}$$

$$\tau \approx 2.667\mu s$$

Steady-state will be reached in five time constants, or approximately 13.33 microseconds. Thus we know that $V_L(0) = 9$ volts and $V_L(1ms) = 0$ volts. Because the inductor is an open initially, $I_L(0) = 0$ amps. At I_L(1 ms), the circuit is in steady-state and the inductor acts like a short. Therefore, all of the 9 volt source drops across the 150 Ω resistor, for 60 mA.

To find V_L(2 \mu s) we simply solve Equation 9.5.2.

$$V_L(t) = E\epsilon^{-\frac{t}{\tau}}$$

$$V_L(2\mu s) = 9V\epsilon^{-\frac{2\mu s}{2.667\mu s}}$$

$$V_L(2\mu s) \approx 4.251V$$

This value can also be determined graphically from Figure 9.5.2 . The time of 2 microseconds represents 75% of a time constant. Find this value on the horizontal axis and then track straight up to the solid blue curve that represents the charging inductor voltage. The point of intersection is right around 47% of the maximum value on the vertical axis. The maximum value here is the source voltage of 9 volts. Therefore the inductor will have reached approximately 47% of 9 volts, or just over 4.2 volts.

The current can be found in a similar manner using Equation 9.5.4.

$$I_L(t) = \frac{E}{R}\left(1 - \epsilon^{-\frac{t}{\tau}}\right)$$

$$I_L(2\mu s) = \frac{9V}{150\Omega}\left(1 - \epsilon^{-\frac{2\mu s}{2.667\mu s}}\right)$$

$$I_L(2\mu s) = 60mA\left(1 - \epsilon^{-0.75}\right)$$

$$I_L(2\mu s) = 31.66mA$$

Computer Simulation

To verify our analysis, the circuit of Figure 9.5.3 is entered into a simulator, as shown in Figure 9.5.4 . In order to reflect the notion of a time-varying circuit with a switch, the 9 volt DC voltage source has been replaced with a rectangular pulse voltage source. This source starts at 0 volts and then immediately steps up to 9 volts. It stays at this level for 20 microseconds before dropping back to 0 volts.

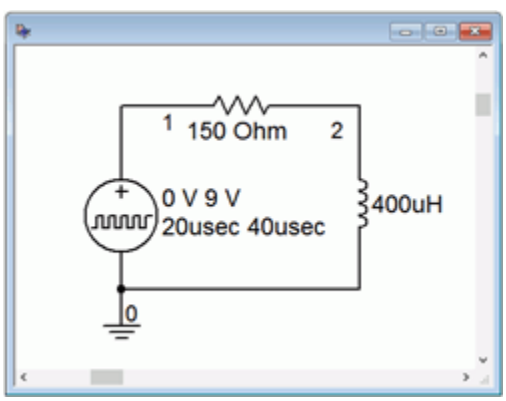

Figure 9.5.4 : The circuit of Figure 9.5.3 in a simulator.

The results of a transient analysis are shown in Figure 9.5.5 . The waveform shown tracks the inductor's voltage at node 2 with respect to ground.

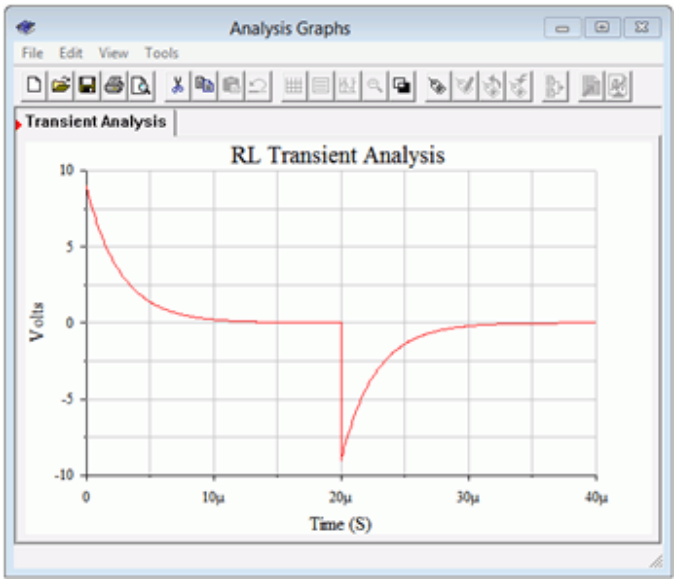

Figure 9.5.5 : Simulation results for the circuit of Figure 9.5.3 .

We can see that the voltage starts at 9 volts as expected. It then falls back to zero and is at steady-state in less than 15 microseconds, just as predicted. At 20 microseconds, the pulse source returns to zero volts. At this instant, the current through the inductor must still be the steady-state current of 60 milliamps. This current will still be flowing in a clockwise direction, thus it will produce a 9 volt drop across the 150 Ω resistor with a + to – polarity from left to right. This effectively places node 2 negative with respect to ground. The result is that the polarity of the inductor's voltage flips, with the inductor now acting as a short-lived source. We see this on the transient analysis as a negative 9 volt spike. The discharge time constant is identical to the charge constant, and thus we see the inductor's voltage fall back to zero in the same amount of time.

Example 9.5.2

Given the circuit of Figure 9.5.6 , find V_L at $t = 1$ microsecond after the circuit is energized. Assume the inductor is initially uncharged.

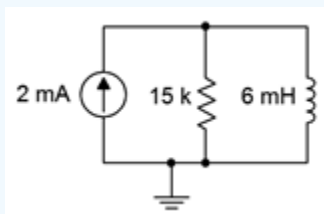

Figure 9.5.6 : Circuit for Example 9.5.2 .

First, the time constant:

$$\tau = \frac{L}{R}$$

$$\tau = \frac{6mH}{15k\Omega}$$

$$\tau = 400ns$$

Steady-state will be reached in five time constants, or 2 microseconds, at which point the inductor voltage will be zero as it will be behaving as a short. In contrast, as the inductor is initially an open $(I_L(0) = 0)$, all of the current from the source will flow into the 15 kΩ resistor, producing 30 volts across this parallel network. Therefore, we can state that $V_L(0) = 30$ volts and V_L(2 \mu s) = 0 volts, defining the extremes. In order to find V_L(1 \mu s), we can use Equation 9.5.2.

$$V_L(t) = E\epsilon^{-\frac{t}{\tau}}$$

$$V_L(1\mu s) = 30V\epsilon^{-\frac{1\mu s}{0.4\mu s}}$$

$$V_L(1\mu s) \approx 2.463V$$

There are a few different ways to crosscheck this value. For starters, we can determine the inductor current using a slight modification of Equation 9.5.4 (the current source value is used in place of E/R as the equation effectively requires the maximum or steady-state current).

$$I_L(t) = I\left(1 - \epsilon^{-\frac{t}{\tau}}\right)$$

$$I_L(1\mu s) = 2mA\left(1 - \epsilon^{-\frac{1\mu s}{0.4\mu s}}\right)$$

$$I_L(1\mu s) = 1.836mA$$

The inductor voltage of 2.463 volts would also have to appear across the parallel 15 kΩ resistor. This produces 2.463 V / 15 kΩ, or 0.164 mA of resistor current. By KCL, the remainder of the 2 mA source current must be flowing down through the inductor. This yields a net inductor current of 2 mA – 0.164 mA, or 1.836 mA, verifying our prior result.

Example 9.5.2 also reinforces the concept of the time constant being inversely proportional to the resistance, rather than directly proportional as in the RC case. In the circuit of Figure 9.5.6 , it should be obvious that the larger the resistance value, the larger the resulting initial-state voltage. From Equation 9.2.9 it can be seen that if the voltage across the inductor is increased, then the initial rate of change of current with respect to time will increase, and that implies a shorter time constant.

For more complex circuits, Thévenin's theorem may be used in order to determine the effective source voltage and charging resistance. As we saw with RC circuits, it's also possible that the discharge resistance may be considerably different from the charging resistance. In such a case, the charge and discharge curves can be highly asymmetric in both time and amplitude. Generally, the larger the discharge resistance is when compared to the charge resistance, the larger in voltage and the shorter in time the discharge spike will be (think in terms of the area under the curve staying constant).

Example 9.5.3

Assume the initial current through the inductor is zero in Figure 9.5.7 . Determine the time constant. Also, determine the inductor voltage and the voltage across the 6 kΩ resistor 200 nanoseconds after the switch is closed.

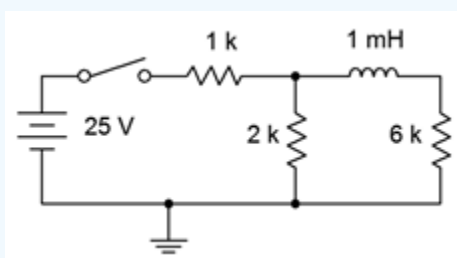

Figure 9.5.7 : Circuit for Example 9.5.3 .

This circuit is based on the circuit presented in Figure 9.3.2 as used in Example 9.3.1. In that analysis it was discovered that the steady-state voltage for the 6 kΩ and 2 kΩ resistors was 15 volts, the pair being in parallel. Further, the initial voltage across the 2 kΩ resistor and the inductor was 16.67 volts and for the 6 kΩ resistor, 0 volts.

For the Thévenin circuit, the open circuit voltage at the inductor would be the potential across the 2 kΩ resistor, which is obtained from a voltage divider between it and the 1 kΩ resistor, or 16.67 volts. The equivalent resistance is obtained by shorting the voltage source which leaves the 1 kΩ and 2 kΩ resistors in parallel, which is then in series with the 6 kΩ resistor, yielding approximately 6.667 kΩ. The equivalent is shown in Figure 9.5.8 .

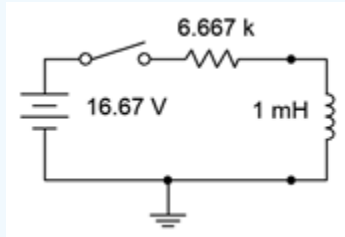

Figure 9.5.8 : Thévenin equivalent of the circuit of Figure 9.5.7 driving the inductor.

Immediately, we can see that the initial-state voltage across the inductor is confirmed in the equivalent circuit. We can now determine the time constant.

$$\tau = \frac{L}{R}$$

$$\tau = \frac{1mH}{6.667k\Omega}$$

$$\tau = 150ns$$

Steady-state will be reached in 750 nanoseconds. To find the inductor voltage we can use Equation 9.5.2.

$$V_L(t) = E\epsilon^{-\frac{t}{\tau}}$$

$$V_L(200ns) = 16.67V\epsilon^{-\frac{200ns}{150ns}}$$

$$V_L(200ns) \approx 4.39V$$

Referring back to the original circuit, in order to determine the voltage across the 6 kΩ resistor we can find the current through it and use Ohm's law. The current would be the same as the inductor's current as the two are in series. Thus, Equation 9.5.4 would do the trick.

$$I_L(t) = \frac{E}{R}\left(1 - \epsilon^{-\frac{t}{\tau}}\right)$$

$$I_L(200ns) = \frac{16.67V}{6.667k\Omega}\left(1 - \epsilon^{-\frac{200ns}{150ns}}\right)$$

$$I_L(200ns) = 2.5mA\left(1 - \epsilon^{-1.333}\right)$$

$$I_L(200ns) \approx 1.841mA$$

And finally,

$$V_{6k}(200ns) = IR$$

$$V_{6k}(200ns) = 1.841mA6k\Omega$$

$$V_{6k}(200ns) \approx 11.05V$$

Further, the voltage across the 2 kΩ resistor must be the sum, or approximately 15.44 volts.

Computer Simulation

The results of Example 9.5.3 are crosschecked in a simulator. Once again the circuit is built using a pulse generator, as shown in Figure 9.5.9 .

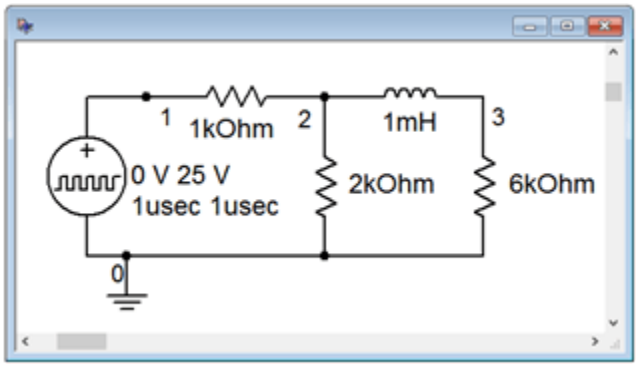

Figure 9.5.9 : Circuit of Figure 9.5.7 in a simulator.

A transient analysis is run out to 1 microsecond which is modestly into steady-state. Node voltages 2 and 3 are plotted, as shown in Figure 9.5.10 . The initial voltage across the 2 kΩ resistor (node 2) is as predicted, approximately 16.7 volts, and falls to 15 volts at steady-state, approximately 750 nanoseconds later. The voltage across the 6 kΩ resistor (node 2) starts at zero volts and also winds up at 15 volts in steadystate, just as predicted. Further, note that the predicted voltages across the 2 kΩ and 6 kΩ resistors at 200 nanoseconds are verified.

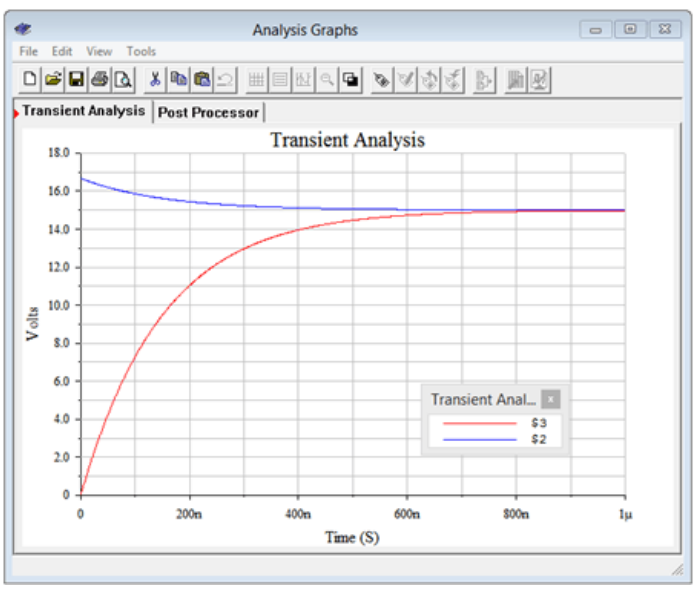

Figure 9.5.10 : Transient analysis simulation of the circuit of Figure 9.5.7 .

The voltage across the inductor is node 2 minus node 3. This differential is plotted separately in Figure 9.5.11 . The expected initial, steady-state and 200 nanosecond voltages are as predicted.

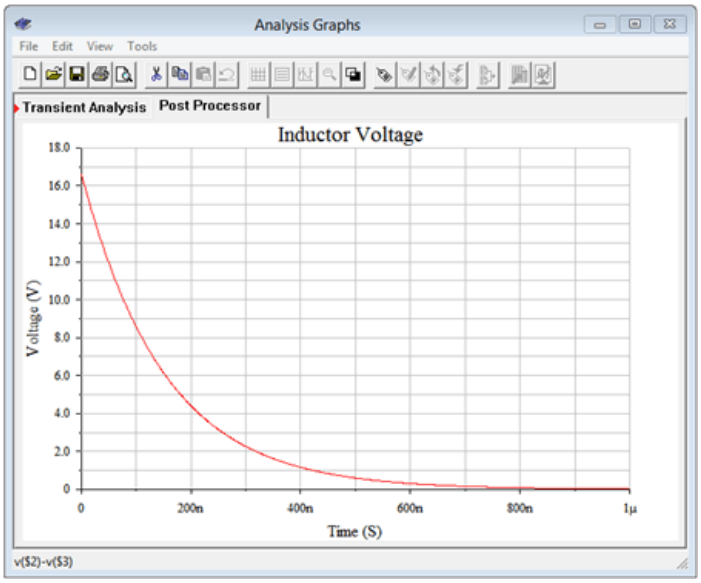

Figure 9.5.11 : Simulation of the inductor voltage versus time for the circuit of Figure 9.5.7 .

One very important observation is that if an RL circuit is abruptly altered or opened, very large voltage spikes may occur. This is due to the fact that inductor current cannot change instantaneously. If the circuit is opened, the open represents a very large resistance. Ohm's law indicates that the inductor current times this very large resistance may produce a very large voltage across the new open. In fact, the potential may be sufficient to cause a spark or arc. Note that because the current cannot change instantaneously (both magnitude and direction), the inductor now behaves as a voltage source of very high magnitude and with reverse polarity. This phenomenon is used to create the ignition spark in internal combustion engines. In short, the ignition coil is charged, creating some current flow. The circuit is then interrupted leaving just the coil in series with the spark plug, the spark plug being little more than a precisely sized gap between two electrodes. This results in a large voltage being developed across the spark plug gap, typically in the neighborhood of 20,000 volts, which is sufficient to create a small arc (i.e., the spark) that then ignites the air-fuel mixture in the piston.

An example of producing a discharge voltage spike that is considerably larger than the source voltage can be illustrated with the circuit of Figure 9.5.12 . We shall assume that the inductor is initially uncharged when power is applied, and that the switch is in position 1. In this case, the circuit consists of just the 12 volt source, the 2.2 kΩ resistor, and the inductor. The circuit reaches steady-state in roughly 227 nanoseconds. At that point the inductor behaves as a short, leaving the full 12 volt source to drop across the 2.2 kΩ resistor. This produces a clockwise current of approximately 5.455 mA.

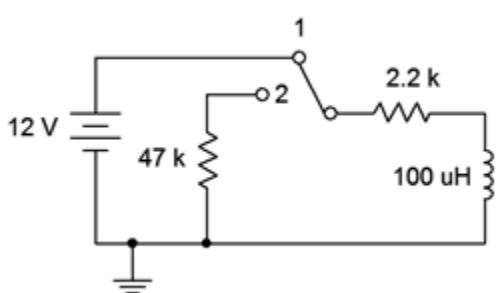

Figure 9.5.12 : Circuit illustrating large discharge voltage spike.

If we now move the switch to position 2, this current must be maintained because the current through the inductor cannot change instantaneously. The new discharge resistance is now the series combination of the two resistors, or 49.2 kΩ. Ohm's law and KVL dictate that the resulting inductor voltage must be 49.2 kΩ times 5.455 mA, or just beyond −268 volts. This potential is negative because the clockwise current is flowing up through the 47 kΩ resistor, producing a drop + to − from ground up. The increased resistance also shortens the time constant and now steady-state will be reached in only 10.1 nanoseconds. Thus, we see a much larger magnitude spike (over twenty times that of the source voltage) with a much shorter time duration (less than one-twentieth

of the charge time).

Depending on the kind of switch that is used, things can be even more extreme than what has been just described. Switches come in two basic varieties: make-beforebreak and break-before-make. The former makes contact with the second position before it breaks contact with the first position, while the latter does the opposite. The behavior just described assumes that a make-before-break switch is being used. In contrast, if a break-before-make switch is used, we'd see a drastically different result.

Let us pick up back at steady-state with 5.455 mA flowing through the inductor. We now throw the switch to position 2. This new switch breaks contact with the wire leading back to voltage source prior to it making contact with the 47 kΩ resistor. For a short instant of time the switch is not making contact with anything and the resulting resistance in the loop is determined by the air gap between the switch contacts. Even if this was a mere 10 MΩ, the resulting potential would be over 50,000 volts. This will almost certainly create a spark and we will have inadvertently recreated the spark plug scenario. Hopefully, there are no combustible gases nearby.

References

[1]Which is to say, E/L amps per second times L/R seconds yields E/R amps.

[2]See also Appendix C.

This page titled 9.5: Transient Response of RL Circuits is shared under a CC BY-NC-SA 4.0 license and was authored, remixed, and/or curated by James M. Fiore via source content that was edited to the style and standards of the LibreTexts platform.

9.6: Summary

The inductor is a device that stores energy in the form of a magnetic field. Inductance, L, is measured in henries, H. The idealized device consists of several loops or coils of wire. These may or may not be wrapped around a magnetic core material. Inductance is directly proportional to the permeability of the core material and the cross sectional area of the loops, and inversely proportional to the length of the coil. It is also proportional to the square of the number of loops. The most important non-ideal parameter is R_{coil}, or equivalent coil resistance. Ideally, this value is zero. Absolute accuracy, temperature stability and similar parameters round out the distinguishing features of one kind of inductor against another. When placed in series, inductors add in the same manner as resistors in series. When placed in parallel, inductors combine like resistors in parallel.

Perhaps the most important operational characteristic regarding inductors is that current through an inductor cannot change instantaneously. It will take some finite amount of time before the magnetic field reacts, leading to a predictable rise in current through it. Because of this, for DC circuits inductors initially behave like opens, but after sufficient time has passed, they behave like shorts. The amount of time required to reach steady-state is five time constants, where one time constant is defined as the inductance divided by the circuit's effective resistance. The current charge curve is of the shape $1-\varepsilon^{-t}$. The inductor's current starts at zero and rises to some maximum value. The corresponding voltage shape is of the form ε^{-t}. Here, the voltage starts at a maximum and eventually approaches zero as time passes.

Review Questions

1. What are the physical characteristics of inductors and how do they affect inductance?

2. Define the voltage-current characteristic for inductors.

3. What is R_{coil}?

4. How do inductors combine when placed in series? How do they combine when placed in parallel?

5. Define the initial and steady-state behavior of inductors.

6. Define time constant for an RL circuit.

7. How do the charge and discharge characteristics of RL circuits compare to those of RC circuits?

This page titled 9.6: Summary is shared under a CC BY-NC-SA 4.0 license and was authored, remixed, and/or curated by James M. Fiore via source content that was edited to the style and standards of the LibreTexts platform.

9.7: Exercises

Analysis

1. For the circuit shown in Figure 9.7.1 , determine the effective inductance.

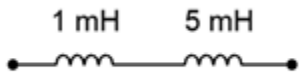

Figure 9.7.1

2. Determine the effective inductance of the network shown in Figure 9.7.2 .

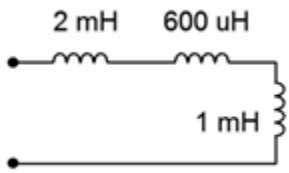

Figure 9.7.2

3. Given the inductor network shown in Figure 9.7.3 , determine the effective value.

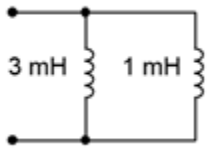

Figure 9.7.3

4. Determine the effective inductance of network shown in Figure 9.7.4 .

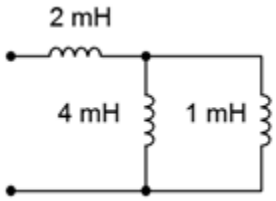

Figure 9.7.4

5. Determine the initial voltage across each component for the circuit shown in Figure 9.7.5 .

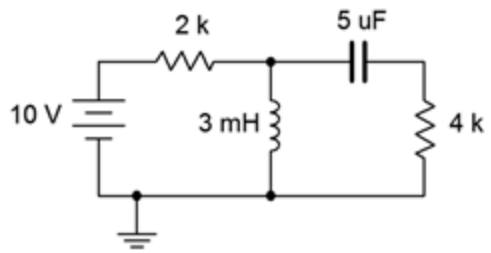

Figure 9.7.5

6. Given the network shown in Figure 9.7.5 , determine the steady-state voltage across each component.

7. Given the network shown in Figure 9.7.6 , determine the steady-state voltage across each component.

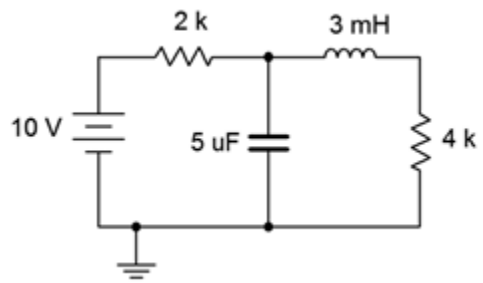

Figure 9.7.6

8. Determine the initial voltage across each component for the circuit shown in Figure 9.7.6 .

9. Given the network shown in Figure 9.7.7 , determine the steady-state voltage across each component.

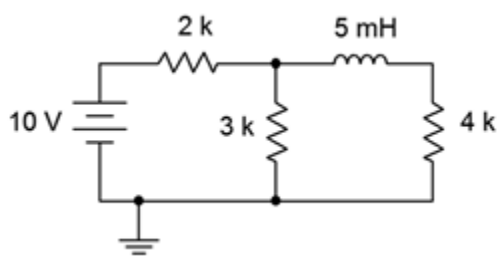

Figure 9.7.7

10. Determine the initial voltage across each component for the circuit shown in Figure 9.7.7 .

11. Determine the initial voltage across each component for the circuit shown in Figure 9.7.8 .

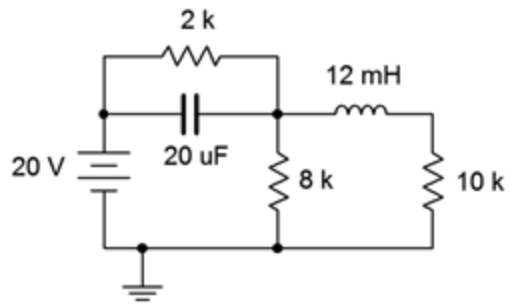

Figure 9.7.8

12. Given the network shown in Figure 9.7.8 , determine the steady-state voltage across each component.

13. Given the network shown in Figure 9.7.9 , determine the steady-state voltage across each component.

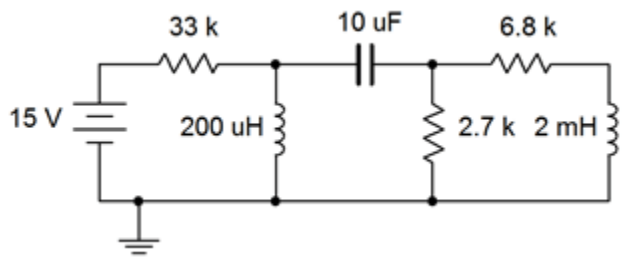

Figure 9.7.9

14. Determine the initial voltage across each component for the circuit shown in Figure 9.7.9 .

15. For the circuit shown in Figure 9.7.10 , determine the inductor current 20 microseconds after the power is switched on. Assume this is an ideal inductor with no internal resistance.

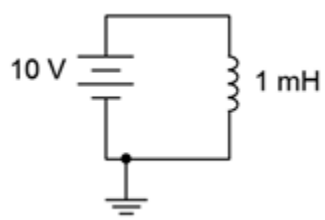

Figure 9.7.10

16. For the circuit shown in Figure 9.7.11 , determine the inductor current 100 milliseconds after the power is switched on. Assume this is an ideal inductor with no internal resistance.

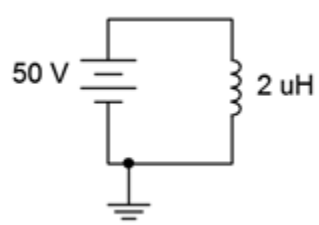

Figure 9.7.11

17. Determine the time constant and the time required to reach steady-state for the circuit shown in Figure 9.7.12 .

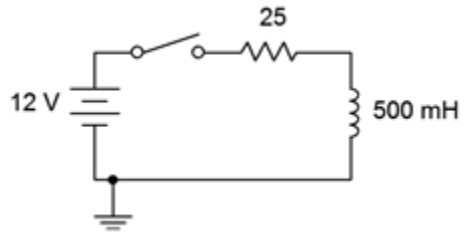

Figure 9.7.12

18. Determine the time constant and the time required to reach steady-state for the circuit shown in Figure 9.7.13 .

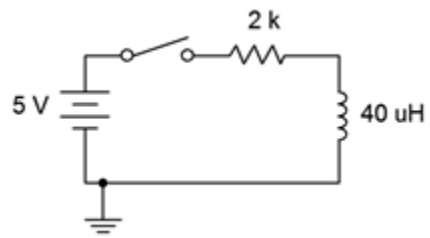

Figure 9.7.13

19. Given the circuit shown in Figure 9.7.2 , determine the inductor voltage and circulating current 200 milliseconds and 2 seconds after the switch is thrown. How does this change if we include 5 Ω of internal resistance to the inductor?

20. For the circuit shown in Figure 9.7.13 , determine the inductor voltage and circulating current 50 nanoseconds and 100 milliseconds after the switch is thrown.

21. Determine the time constant and the time required to reach steady-state for the circuit shown in Figure 9.7.14 , switch position 1.

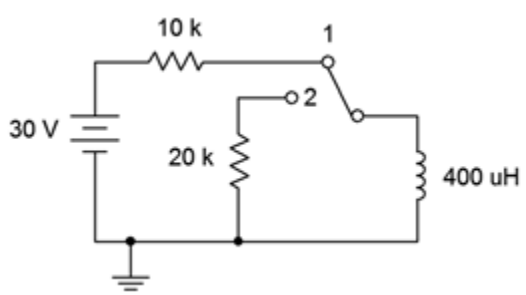

Figure 9.7.14

22. Determine the charge and discharge time constants for the circuit shown in Figure 9.7.15 .

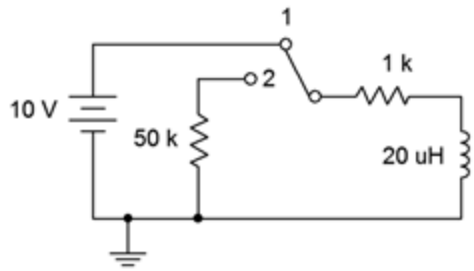

Figure 9.7.15

23. Given the circuit shown in Figure 9.7.14 , determine the inductor current 1 millisecond after the power is turned on. At this point, the switch is thrown to position 2. Determine the inductor voltage the instant of switch contact (assume ideal switch).

24. For the circuit shown in Figure 9.7.15 , determine the inductor current 400 microseconds after the power is turned on. At this point, the switch is thrown to position 2. Determine the inductor voltage the instant of switch contact (assume ideal switch).

25. Determine the time constant and the time required to reach steady-state for the circuit shown in Figure 9.7.16 , switch position 1.

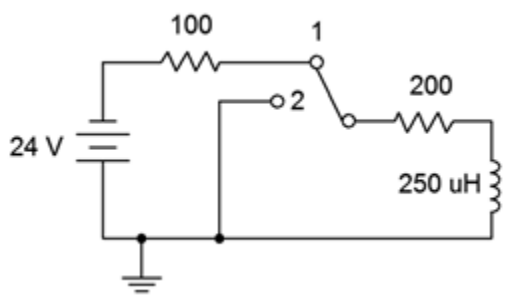

Figure 9.7.16

26. Given the circuit shown in Figure 9.7.16 , determine both the inductor current and voltage 10 milliseconds after the power is turned on. At this point, the switch is thrown to position 2. Determine how long it will take the inductor to discharge to nearly zero amps. Assume ideal switch.

Design

27. For Figure 9.7.12 , determine a new resistor value such that steady-state is reached in 2 milliseconds.

28. For Figure 9.7.13 , determine a new inductor value such that steady-state is reached in 5 microseconds.

Challenge

29. Determine the time constant and the time required to reach steady-state for the circuit shown in Figure 9.7.17 .

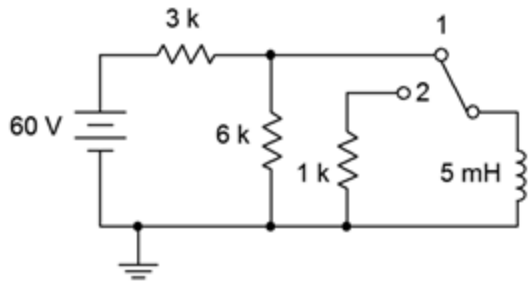

Figure 9.7.17

30. For the circuit shown in Figure 9.7.17 , determine the inductor voltage 400 microseconds after the power is turned on. At this point, the switch is thrown to position 2. Determine how long it will take the inductor to discharge to nearly zero amps. Assume ideal switch.

Simulation

31. Use a transient analysis to verify the time constant and time to steady-state of Figure 9.7.13 (problem 18).

32. Use a transient analysis to verify the inductor voltage waveform of Figure 9.7.12 as specified in problem 19.

This page titled 9.7: Exercises is shared under a CC BY-NC-SA 4.0 license and was authored, remixed, and/or curated by James M. Fiore via source content that was edited to the style and standards of the LibreTexts platform.

10: MAGNETIC CIRCUITS AND TRANSFORMERS

Learning Objectives

After completing this chapter, you should be able to:

- Describe the basic quantities of a magnetic circuit including magnetic flux, flux density and magnetizing force.
- Outline a BH curve and define aspects including hysteresis, coercivity and retentivity.
- Analyze basic magnetic circuits using BH curves.
- Describe the uses and operation of transformers.
- Analyze basic transformer circuits.

10.1: Introduction

10.2: Electromagnetic Induction

10.3: Magnetic Circuits

10.4: Transformers

10.5: Summary

10.6: Exercises

This page titled 10: Magnetic Circuits and Transformers is shared under a CC BY-NC-SA 4.0 license and was authored, remixed, and/or curated by James M. Fiore via source content that was edited to the style and standards of the LibreTexts platform.

10.1: Introduction

This chapter extends the material presented in the chapter on inductors and introduces the concept of magnetic circuits. Basic applications are also illustrated. Here we shall take a closer look at the parameters of magnetic circuits such as permeability and flux density, and introduce new parameters including reluctance and magnetizing force. We shall also examine a key graphic that helps define the magnetic properties of materials, namely the BH curve. In the process we shall define new terms including coercivity and retentivity, and introduce the concept of hysteresis.

As we shall see, there are certain parallels between magnetic circuits and electrical circuits. For example, there is an “Ohm's law for magnetic circuits”, sometimes referred to as Hopkinson's law. There is also a version of Kirchhoff's voltage law dealing with the magnetic equivalents of voltage rises and drops.

Perhaps the two most common applications of magnetic circuits for the new student involve the use of transformers and relays, both of which will be examined in this chapter. Other common applications include dynamic loudspeakers and microphones, magnetic resonance imaging (i.e., medical MRI), pick-up cartridges for vinyl phonographs and the various applications made available by magnetic Hall effect sensors such as advanced anti-lock braking systems, timing control systems for internal combustion engines, and other instances requiring position and motion sensing. These magnetic devices tend to be much more reliable and capable than simple devices such as mechanical switches. This does not mean that magnetic systems are in some way “taking over”, indeed, there are some applications where they have become obsolete. One example is the use of output transformers to couple a home audio power amplifier to a loudspeaker. At one time, these were an integral part of every design, however, today they generally are not used. With this in mind, it is perhaps best to think of magnetic circuits as another item in the engineer's or technician's toolkit to help solve practical problems.

This page titled 10.1: Introduction is shared under a CC BY-NC-SA 4.0 license and was authored, remixed, and/or curated by James M. Fiore via source content that was edited to the style and standards of the LibreTexts platform.

10.2: Electromagnetic Induction

Perhaps the most important observation regarding magnetic systems is Faraday's law of electromagnetic induction. Briefly, it states:

$$\text{If a conductor is cut by changing magnetic lines of force, a voltage will be induced in the conductor.} \tag{10.2.1}$$

More specifically,

$$e = -\frac{d\Phi}{dt} \tag{10.2.2}$$

Where

e is the induced voltage,

$d\Phi/dt$ is the rate of change of magnetic flux with respect to time.

Therefore, the larger the flux and the more quickly it fluctuates, the greater the induced voltage. What is important here is a relative change with respect to the conductor and field. This can be accomplished in two basic ways: by a magnetic field that is itself fluctuating around a fixed conductor, or by a conductor moving through a magnetic field.

The concept of electromagnetic induction is a key element of a variety of transducers. Simply put,

$$\text{A transducer is a device that transforms energy from one type to another.} \tag{10.2.3}$$

Although many people don't think of them as such, electric motors and generators are perfect examples of transducers. An electric motor transforms electrical energy into mechanical energy and a generator does the precise opposite, transforming mechanical energy into electrical energy. More commonly, the word transducer is associated with devices such as loudspeakers and microphones. A loudspeaker transforms its electrical input into an acoustic pressure wave (sound) whereas the microphone performs the complementary function of transforming an acoustic pressure wave into an electrical signal. While there are different ways of constructing these devices, the most common designs are the dynamic loudspeaker and dynamic microphone, both of which rely on the principle of electromagnetic induction. The designs of the two devices are strikingly similar, mostly varying in size and parts optimization. Let's take a closer look at how they operate.

Dynamic Loudspeakers and Microphones

Regardless of their output capabilities and frequency range, all dynamic loudspeakers share a common set of elements. Corresponding elements can be found in dynamic microphones. Indeed, the devices are so similar that in some applications, small loudspeakers might pull double duty and switch over to a microphone mode of operation. A cutaway view of a loudspeaker designed to reproduce low frequencies is shown in Figure 10.2.1 .

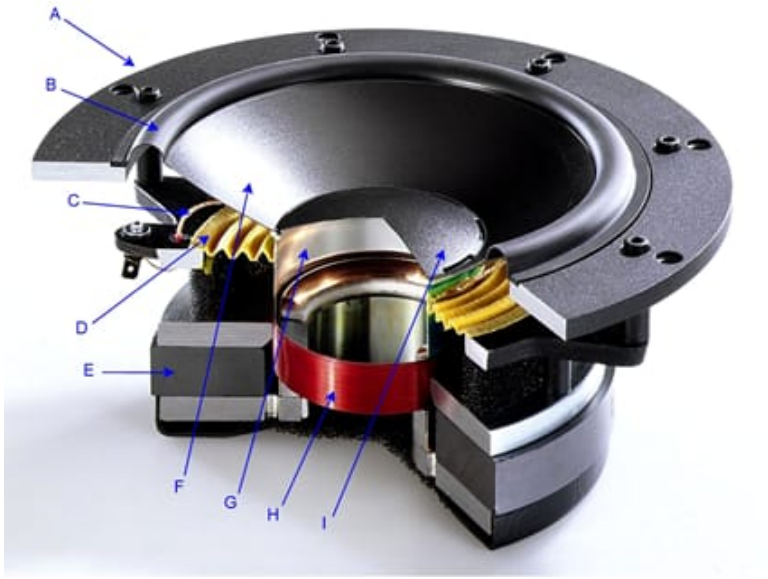

Figure 10.2.1 : Cutaway view of a dynamic loudspeaker. A. Frame B. Suspension C. Lead wire D. Spider E. Magnet F. Diaphragm G. Voice coil former H. Voice coil I. Dust cap Image courtesy of Audio Technology.

The heart of the system is a voice coil (H) which is a coil of tightly wound magnet wire. This sits inside of a magnetic field that is created by a powerful permanent magnet (E). The voice coil is connected to a diaphragm (F) that is is usually made of paper or plastic. This assembly is connected to the frame by the spider (D) at the top of the voice coil, and a suspension at the end of the diaphragm (B). The voice coil and diaphragm can move back and forth relative to the frame, like a piston.

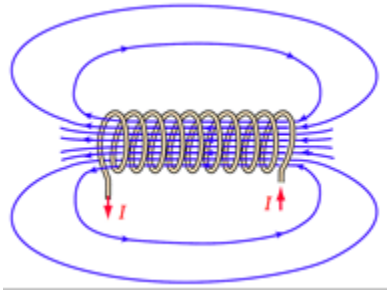

Figure 10.2.2 : Magnetic field around a coil. Image ©, courtesy of HyperPhysics

To understand the operation, recall that passing a current through a coil of wire creates a magnetic field around the coil, as illustrated in Figure 10.2.2 . This magnetic field is the same as is created by a normal magnet. In this case the north pole is on the left side (i.e., lines of force exiting). Consequently, this coil will interact with a permanent magnet just like any other magnet would. In the case of the loudspeaker, the voice coil is fed a current from the amplifier that echoes the music or voice signal. This current creates a magnetic field around the voice coil which interacts with the field of the permanent magnet. As the direction of the current changes, the poles of the voice coil's field reverse. Thus, sometimes the voice coil is pushed outward and sometimes it is pulled inward. Further, the larger the current, the greater the field it creates, and the greater the push or pull.

This results in a back-and-forth motion of the diaphragm that echoes the shape of the waveform being fed from the amplifier. As the diaphragm pushes against the air, it sets up a pressure wave, and we have sound.

A dynamic microphone runs the sequence in reverse. First, the diaphragm will move back and forth in accordance to an applied sound wave. This causes the voice coil to move back and forth within the field of the permanent magnet. We now have a coil of wire being cut by magnetic lines of force, and by Faraday's law of induction, this means that a voltage will be induced in the coil. As long as the diaphragm can respond to the subtle changes in the acoustic pressure wave, then the resulting induced voltage should be of high fidelity. Clearly, to do this with great accuracy, the diaphragm/voice coil/suspension assembly will need to very light and nimble, meaning that the components of the microphone will tend to be much smaller than those of a loudspeaker.

Electric Guitar Pickup

A set of pickups for an electric guitar is shown in Figure 10.2.3 . Although it might be tempting to think that the pickups are just microphones, they are not. If you have any doubt of this statement, just try screaming into a guitar pickup and listen to what comes out[1]. The operation of the guitar pickup does, however, rely on Faraday's law.

Figure 10.2.3 : Pickups on an electric guitar.

As discussed in the prior chapter covering inductance, an electric guitar pickup consists of thousands of turns of very fine wire around a permanent magnet. The pickup is placed immediately below the guitar strings. In this position, the metal guitar strings (generally various combinations of steel, nickel and/or cobalt), are within the field generated by the magnet. When a string is plucked, it vibrates in a complex pattern that depends on the note it is tuned to and the overtones that are present. This pattern distorts the magnetic field because the strings have a much higher permeability than the air around them. We now have a changing magnetic field, in the middle of which is large coil of wire. Faraday's law states that a voltage must be induced in this coil, and that it will follow the motions of the strings. This induced voltage is then fed to an amplifier, hopefully, set to 11.

The astute observer might ask, “Why are there multiple pickups?” Perhaps surprisingly, it is not to get a larger, and thus louder, signal. It has to do with the timbre, or tone quality, of the sound. When a guitar string vibrates, its motion can be thought of as containing the myriad motions of the fundamental pitch and all of the overtones that go with it. Towards the bridge, where the strings are attached, the lowest pitched elements produce little motion, and thus their strength in the overall signal is reduced. The result is that a pickup placed closer to the bridge sounds “thin” or “cutting” while one placed further up sounds “full” or “thick”.

Bicycle Computer

Our third and final illustrative example is that of a bicycle computer. These handy little devices consist of a small sensor system on the front wheel which is connected to a display unit mounted on the handlebars. Typically, these units will display current speed, average speed, elapsed time, distance covered, and other attributes of interest.

Figure 10.2.4 : Bicycle computer sensor and magnet.

The sensing apparatus of a typical bicycle computer is shown in Figure 10.2.4 . This apparatus consists of two parts: a permanent magnet mounted to one of the wheel spokes, and a weatherproof sensing unit mounted to the front fork. The principle of operation is fairly straightforward: each time the while rotates, the magnet attached to the spoke swings by the sensor. The moving magnetic field creates a short-lived voltage spike in the sensor, an example shown in Figure 10.2.5 . The computer records these spikes over time. Knowing the circumference of the wheel, a simple multiplication yields the accumulated distance traversed. Given internal clocking circuitry, the time recorded between the pulses can be turned into a velocity. Given these data, other attributes such as average or maximum speed are easily obtained with further computation.

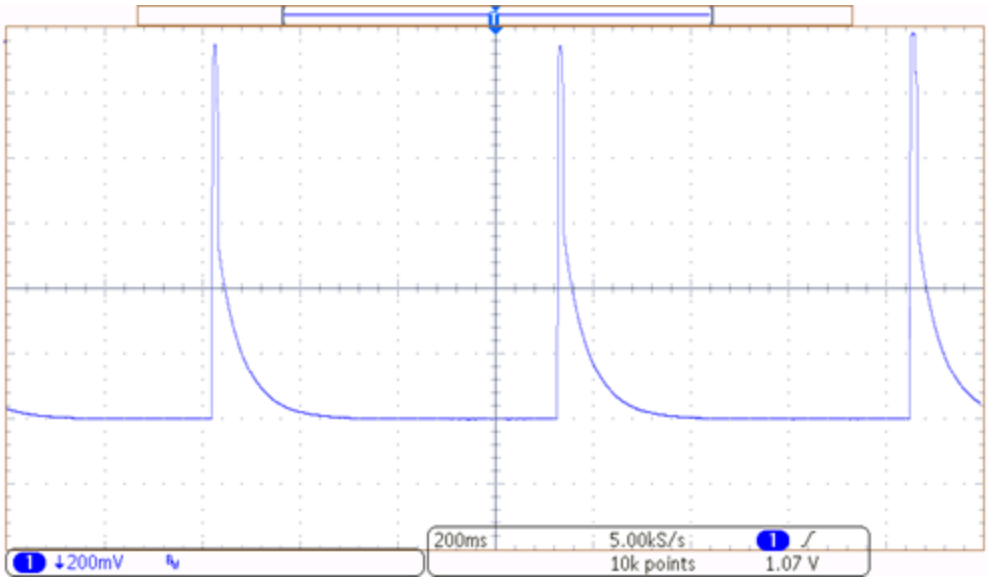

Figure 10.2.5 : Sensor signal feeding bicycle computer.

Using the oscilloscope trace shown in Figure 10.2.5 as an example, we can see that the time between the pulses is about 3.5 divisions, with each division being 200 milliseconds in length. This gives one rotation every 0.7 seconds, or roughly 5140 revolutions per hour. The sensor was mounted on a bike with 700 by 25 mm tires which yields a circumference of about 2.1 meters. Thus, the velocity would be 5140 revolutions per hour at 2.1 meters per revolution, or about 10.8 km/h ($\approx$ 6.73 MPH).[2]

References

[1]A little string resonance if you're lucky, and some irritated band-mates if you're not.

[2]In reality, the bike was mounted on a maintenance stand so its velocity was, in fact, zero. Running alongside a bike with an oscilloscope and probes is no easy feat, especially when the scope needs AC power.

This page titled 10.2: Electromagnetic Induction is shared under a CC BY-NC-SA 4.0 license and was authored, remixed, and/or curated by James M. Fiore via source content that was edited to the style and standards of the LibreTexts platform.

10.3: Magnetic Circuits

Magnetic circuits include applications such as transformers and relays. A very simple magnetic circuit is shown in Figure 10.3.1 .

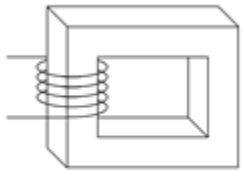

Figure 10.3.1 : Simple magnetic circuit.

First, it consists of a magnetic core. The core may be comprised of a single material such as sheet steel but can also use multiple sections and air gap(s). Around the core is at least one set of turns of wire, i.e., a coil formed around the core. Multiple sets of turns are used for transformers (in the simplest case, one for the primary and another for the secondary). As we have seen already, passing current through the windings generates a magnetic flux, Φ, in the core. As this flux is constrained within the cross sectional area of the core, A, we can derive a flux density, B.

$$B = \frac{\Phi}{A} \tag{10.3.1}$$

Where

B is the magnetic flux density in teslas,

Φ is the magnetic flux in webers,

A is the area in square meters.

Recall from Chapter 9 that one tesla is defined as one weber per square meter. An alternate unit that is sometimes used is gauss (cgs system of units), named after Carl Friedrich Gauss, the German mathematician and scientist.

$$1 \text{ tesla } = 10,000 \text{ gauss} \tag{10.3.2}$$

Example 10.3.1

A magnetic flux of 6E−5 webers exists in a core whose cross section has dimensions of 1 centimeter by 2 centimeters. Determine the flux density in teslas.

First, convert the dimensions to meters to find the area. There are 100 centimeters to the meter.

$$A = width \times height$$

$$A = 0.01m \times 0.02m$$

$$A = 2E - 4m^2$$

$$B = \frac{\Phi}{A}$$

$$B = \frac{6E - 5Wb}{2E - 4m^2}$$

$$B = 0.3T$$

Ohm's Law for Magnetic Circuits (Hopkinson's or Rowland's Law)

There is a common parallel drawn between magnetic circuits and electrical circuits, namely Hopkinson's law (Rowland's law). For electrical circuits, Ohm's law states:

$$V = IR$$

In like manner, for magnetic circuits, we have:

$$\boldsymbol{F} = \Phi \boldsymbol{R} \tag{10.3.3}$$

Where

$\boldsymbol{F}$ is the magnetomotive force (or MMF) in amp-turns,

Φ is the magnetic flux in webers,

$\boldsymbol{R}$ is the reluctance of the material in amp-turns/weber.

The magnetomotive force compares to a source voltage or electromotive force (EMF), the magnetic flux is likened to the flow of current, and the reluctance stands in for resistance (i.e., on the one hand we have a material that resists the flow of current, and on the other, a material in which there is “reluctance” to establish magnetic flux). Further, magnetomotive force is the product of the current flowing through a coil and the number of loops or turns in the coil:

$$\boldsymbol{F} = NI \tag{10.3.4}$$

Where

$\boldsymbol{F}$ is the magneto-motive force in amp-turns,

N is the number of loops or turns in the coil,

I is the current in the coil in amps.

The equation for reluctance has a nice parallel with the equation for resistance (Equation 2.11 from Chapter 2):

$$R = \frac{\phi l}{A}$$

$$\boldsymbol{R} = \frac{l}{\mu A} \tag{10.3.5}$$

Where

$\boldsymbol{R}$ is the reluctance in amp-turns/weber,

l is the length of the material in meters,

A is the cross sectional area of the material in square meters,

μ is the permeability of the material in henries/meter.

Given the characteristics of the coil and the path length of the magnetic circuit, the magnetic flux gives rise to a magnetizing force, H.

$$H = \frac{NI}{l} \tag{10.3.6}$$

Where

H is the magnetizing force in amp-turns/meter,

N is the number of turns or loops in the coil,

I is the coil current in amps,

l is the length of the magnetic path in meters.

Equation 10.3.5 reveals that ferromagnetic materials (i.e., materials that have high permeability, such as steel) produce a low reluctance. The practical problem here is that μ, unlike the resistivity ρ of resistors, is not a constant for these sorts of materials. It can vary considerably, as seen in the general diagram presented in Figure 10.3.2 . As a result, it is impractical to find reluctance in same manner that we find resistance. All is not lost, though.

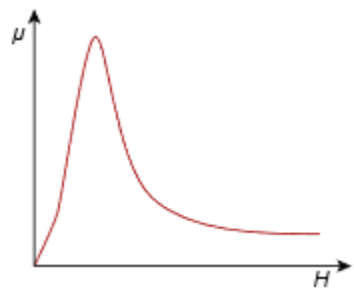

Figure 10.3.2 : Typical permeability curve for a high permeability material.

The flux density and corresponding magnetizing force for any given material are related by the following equation:

$$B = \mu H \tag{10.3.7}$$

Where

B is the flux density in teslas,

μ is the permeability of the material in henries/meter,

H is the magnetizing force in amp-turns/meter.

Once again, the tricky bit here is the permeability of the core material. For air, we can use the permeability of free space, μ_0.

$$\mu_0 = 4\pi \times 10^{-7} H/m \approx 1.257 \times 10^{-6} H/m \tag{10.3.8}$$

For other materials, such as sheet steel or cast steel, we shall take another path; namely an empirically derived curve that plots flux density B against magnetizing force H. Such graphs generically are referred to as "BH curves". An example is shown in Figure 10.3.3 . Clearly, this curve is not a nice straight line, or even an obvious, predictable function. The immediately apparent attributes are the initial steep rise which is followed by a flattening of the curve. This flattening corresponds to saturation of the magnetic material. In contrast, a plot for air would reveal a straight line with a very shallow slope. As we shall see, being able to achieve a high flux density for a given magnetizing force will result in an effective and efficient magnetic circuit. So while air has the positive attribute of not saturating, the resulting flux density is low, usually leading to lower performance.

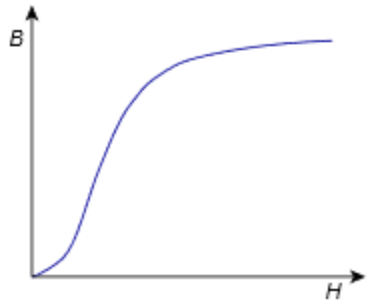

Figure 10.3.3 : Generic BH curve.

The BH Curve

The process of generating a BH curve is as follows. First, we create a core of the material to be investigated. A coil of wire is then wrapped around this core. An example is shown in Figure 10.3.4 . Here we have a basic toroid with a coil of N turns.

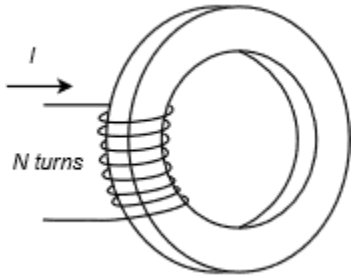

Figure 10.3.4 : Toroidal core with coil.

We begin with the system at rest and not energized. A small current, I, is applied to the coil. This produces a magnetizing force via Equation $10.3.6$. There will be a corresponding flux density, as per Equation $10.3.7$.

The current is then increased. This produces an increase in magnetizing force and a corresponding change in flux density. The current is increased further, until the curve flattens, indicating that saturation has been reached. This trajectory is shown as the dashed line in Figure 10.3.5 , starting at point a with point b indicating saturation. The current is then reduced. This causes a reduction in magnetizing force, but while the flux density decreases, it does not trace back perfectly along the original trajectory. Instead, the curve is displaced above the original.

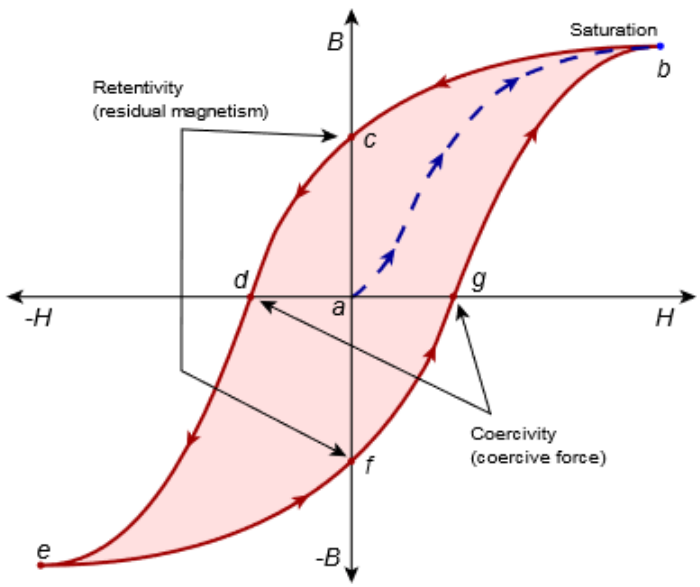

Figure 10.3.5 : Generation of BH curve.

Eventually, the current will be reduced to zero. This corresponds to point c on the graph of Figure 10.3.5 . At this point, even though there is no current in the coil, there is still flux in the core. The resulting flux density is referred to as retentivity and is a measure of residual magnetism. This phenomenon is what makes it possible to magnetize materials.

If we now reverse the direction of the coil current and begin to increase its magnitude, the flux density will continue to drop. At point d, it will have reached zero. As we have effectively coerced the flux back to zero, we call the magnetizing force required to do this the coercivity or coercive force.

As the current magnitude increases, the flux density also increases but with opposite sign. Eventually, saturation is reached again at point e. Once again, if the current's magnitude is decreased, the magnitude of the flux density will also decrease but will not

perfectly trace back along the original trajectory. This time it will follow a lower path. When the current is reduced to zero at point f, a mirror retentivity is evident. Further positive increases in current show a mirror coercivity at point g. Finally, as current is increased to maximum, we again reach saturation at point b.

If the current is cycled in this manner again, the process is repeated, and the outer path indicated by the arrows is taken again. Thus, a specific value of magnetizing force can give rise to different values of flux density: it depends on the recent history of the material. This effect is known as hysteresis and is found in other areas as well.

Effectively, published BH curves follow the middle of the hysteresis loop. An example of BH curves for three different core materials is shown in Figure 10.3.6 [1]. Curve A is for sheet steel (which is common in transformers), curve B is for cast steel, and curve C is for cast iron. We shall make use of these in upcoming examples. Curves for other materials are also available.

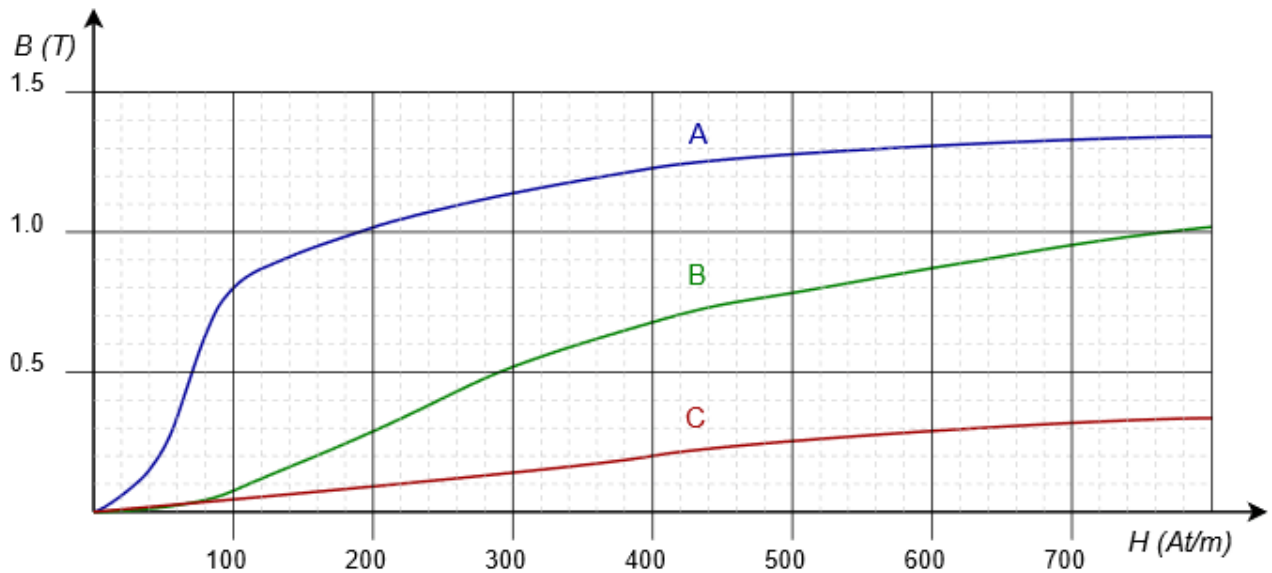

Figure 10.3.6 : BH curves for: A. Sheet steel B. Cast steel C. Cast iron

Example 10.3.2

Assume the toroid of Figure 10.3.4 is made of cast steel, has a 500 turn coil, a cross section of 2 cm by 2 cm, and an average path length of 50 cm. Determine the flux in webers if a current of 0.3 amps feeds the coil.

We shall use Equation 10.3.6 to find the magnetizing force and from the BH curve, find the flux density.

$$H = \frac{NI}{l}$$

$$H = \frac{500 \text{ turns } \times 0.3A}{0.5m}$$

$$H = 300At/m \text{ (amp-turns per meter)}$$

Cast steel corresponds to curve B (green) in Figure 10.3.5 . A decent estimate for the flux density is 0.52 teslas. This is the corresponding flux density. In order to find the flux, we need to find the area of the core.

$$A = width \times height$$

$$A = 0.02m \times 0.02m$$

$$A = 4E - 4m^2$$

$$\Phi = B \times A$$

$$\Phi = 0.52T \times 4E-4m^2$$

$$\Phi = 2.08E-4Wb$$

KVL for Magnetic Circuits

A cursory examination of Equations 10.3.4 and 10.3.6 shows that:

$$\boldsymbol{F} = Hl = NI \tag{10.3.9}$$

Continuing the Ohm's law analogy, the amp-turns product of the coil, NI, is analogous to a voltage rise. Further, the Hl product is analogous to a voltage drop. If we then extend the analogy to include the concept of Kirchhoff's voltage law, it should come as no surprise that the sum of NI “rises” must equal the sum of the Hl “drops”. In the circuit of Figure 10.3.4 , there is a single “rise” and a single “drop”. Thus, the magnetic circuit is analogous to the minimal electric circuit shown in Figure 10.3.7 . $\boldsymbol{F}$ is the magnetomotive force, NI, while $\boldsymbol{R}$ is the reluctance of the toroidal core. This reluctance will experience a “drop” of Hl.

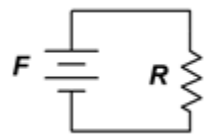

Figure 10.3.7 : Electrical circuit analogy for the magnetic system of Figure 10.3.4 .

The core could consist of two or more different materials, creating the equivalent of a series circuit. In this case, a table such as the one found in Figure 10.3.8 can be used to aid in computation. In this table, each section of the core gets its own row. The table is divided into two sides (note the thick separating line in the center). In general, we will be working through problems where we know the data on the left side and need to find something on the right side, or vice versa. The bridge between the two sides (i.e., traversing the thick line) is a BH curve for the material of that particular section. The exception to this rule is if the section is an air gap. In that case we can use Definition 10.3.8 which shows that for air, $H \approx 7.958E5B$ or alternately, $B \approx 1.257E-6H$.

Figure 10.3.8 : Table format used for magnetic circuit analysis.

Section	Flux	Area	Flux Density	Magnetizing Force	Length	“Drop”
	Φ (Wb)	A (m^2)	B (T)	H (At/m)	l (m)	Hl (At)
1						
2						

Time for a few illustrative examples. We shall consider a simple system like that of Figure 10.3.4 , a two section core, a core with an air gap, and a core with two coils.

Example 10.3.3

Assume the core of Figure 10.3.9 is made of sheet steel, has a 200 turn coil, a cross section of 1 cm by 1 cm, and an average path length of 12 cm. Determine the coil current required to achieve a flux of 1E−4 webers.

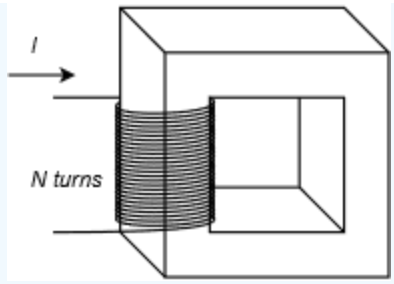

Figure 10.3.9 : Magnetic system for Example 10.3.3 .

The analogous circuit consists of a single source and reluctance, like that of Figure 10.3.7 . Thus,

$$NI = H_{sheet} l_{sheet}$$

We shall begin by filling in the portions of the table that can be addressed directly, such as the path length, area and flux. Don't forget to convert the centimeter values into meters.

Section	Flux Φ (Wb)	Area A (m^2)	Flux Density B (T)	Magnetizing Force H (At/m)	Length l (m)	"Drop" Hl (At)
Sheet Steel	1E−4	1E−4			0.12	

Now we determine the flux density to complete the left side of the table.

$$B = \frac{\Phi}{A}$$

$$B = \frac{1E-4Wb}{1E-4m^2}$$

$$B = 1T$$

Section	Flux Φ (Wb)	Area A (m^2)	Flux Density B (T)	Magnetizing Force H (At/m)	Length l (m)	"Drop" Hl (At)
Sheet Steel	1E−4	1E−4	1		0.12	

We use the BH curve of Figure 10.3.6 to find H from this flux density. From the blue curve (A) the value is about 190 amp-turns per meter.

Section	Flux Φ (Wb)	Area A (m^2)	Flux Density B (T)	Magnetizing Force H (At/m)	Length l (m)	"Drop" Hl (At)
Sheet Steel	1E−4	1E−4	1	190	0.12	

At this point we find the Hl "drop" with a simple multiplication.

Section	Flux Φ (Wb)	Area A (m^2)	Flux Density B (T)	Magnetizing Force H (At/m)	Length l (m)	"Drop" Hl (At)
Sheet Steel	1E−4	1E−4	1	190	0.12	22.8

This "drop" is 22.8 amp-turns and the coil has 200 turns. Therefore the required current is:

$$I = \frac{Hl}{N}$$

$$I = \frac{22.8At}{200t}$$

$$I = 114mA$$

Next, let's consider a core with two sections.

Example 10.3.4

Given the magnetic system shown in Figure 10.3.10 , assume section A is made of sheet steel and section B is made of cast steel. Each part has a cross section of 2 cm by 2 cm. The path length of A is 12 cm and the path length of B is 4 cm. If the coil has 50 turns, determine the coil current required to achieve a flux of 2E−4 webers.

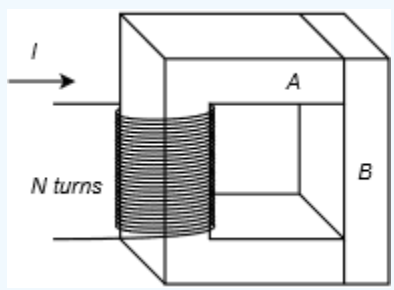

Figure 10.3.10 : Magnetic system for Example 10.3.4 .

The analogous circuit consists of a single source and two reluctances. This is shown in Figure 10.3.11 .

Therefore:

$$NI = H_{sheet}l_{sheet} + H_{cast}l_{cast}$$

For our table there will be two rows, one for sheet steel and the second for cast steel. The first row will require using curve A (sheet steel) from Figure 10.3.6 while the second row will require using curve B (cast steel).

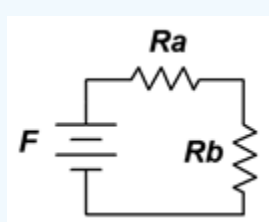

Figure 10.3.11 : Analogous electrical circuit for the system of Figure 10.3.10 .

The flux, like the current in a series loop, will be the same in both sections. From here we can fill out a series of other values in the table to arrive at:

Section	Flux Φ (Wb)	Area A (m^2)	Flux Density B (T)	Magnetizing Force H (At/m)	Length l (m)	"Drop" Hl (At)
Sheet Steel	2E−4	4E−4	0.5		0.12	
Cast Steel	2E−4	4E−4	0.5		0.04	

The BH curves are used to transition to the right side, and we arrive at:

Section	Flux Φ (Wb)	Area A (m^2)	Flux Density B (T)	Magnetizing Force H (At/m)	Length l (m)	"Drop" Hl (At)
Sheet Steel	2E−4	4E−4	0.5	70	0.12	
Cast Steel	2E−4	4E−4	0.5	290	0.04	

And now we fill in the Hl "drops":

Section	Flux Φ (Wb)	Area A (m^2)	Flux Density B (T)	Magnetizing Force H (At/m)	Length l (m)	"Drop" Hl (At)
Sheet Steel	2E−4	4E−4	0.5	70	0.12	8.4
Cast Steel	2E−4	4E−4	0.5	290	0.04	11.6

Using our KVL analogy, the total "drop" is 8.4 At + 11.6 At, or 20 ampturns. The coil was specified as having 50 turns. Therefore:

$$I = \frac{Hl}{N}$$

$$I = \frac{20At}{50t}$$

$$I = 400mA$$

Notice that even though the cast steel section is shorter than the sheet steel section, it produces a larger "drop"; just like a larger resistor in an electrical circuit. This requires a larger current in the coil than if the entire core had been made of sheet steel.

Finally, it should be apparent that the current demand can be reduced if the coil has more turns. There is a practical limit here because all of the turns have to fit within the opening of the core. Once that space is full, the only way to increase the number of turns is to use finer gauge wire but doing so increases wire resistance and power loss, and also lowers maximum current capacity.

Dealing With Air Gaps

Some systems include an air gap in the core. If there is only a single material for the remainder, this will create a system like that

depicted in Figure 10.3.12 . The main observation here is that the permeability of air is far below that of ferromagnetic materials and thus the gap will exhibit a relatively large reluctance compared to its path length. The obvious question then is, why would we use a gap? One possibility is an electro-magnetic relay, the internals of which are illustrated in Figure 10.3.13 .

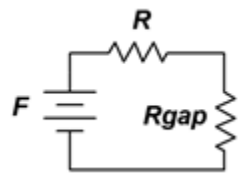

Figure 10.3.12 : Analogous electrical circuit for a system with an air gap.

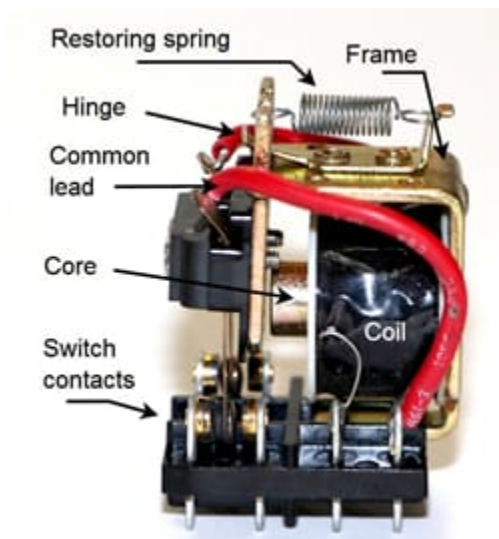

Figure 10.3.13 : Internals of an electrical relay.

To create a relay, we place one portion of the core on a hinge which can be held open with a small spring. This creates the air gap (to the immediate left of the core in the Figure). If we apply a sufficiently large current, the resulting magnetic flux will be enough to overcome the spring tension and close the second piece onto the first (i.e., magnetic attraction). Once this happens, the gap disappears, reducing the reluctance around the loop. The system will stay closed until the coil current is turned off and the restoring spring pulls apart the two sections again. We add insulated metal contacts to the moving section and what we end up with is a heavy duty switch that is “thrown” by a controlling current rather than a mechanical lever moved by a human.

It is worth repeating that for air gaps, instead of a BH curve we can use Definition 10.3.8 which shows that for air, $H \approx 7.958E5B$ or alternately, $B \approx 1.257E-6H$.

Example 10.3.5

Given the magnetic system shown in Figure 10.3.14 , assume the core is made of sheet steel. The cross section throughout is 3E−4 m^2. The path length of the main core is 8 cm and the path length of the gap is 1 mm. How many turns will the coil need in order for a coil current of 400 mA to achieve a flux of 1.2E−4 webers?

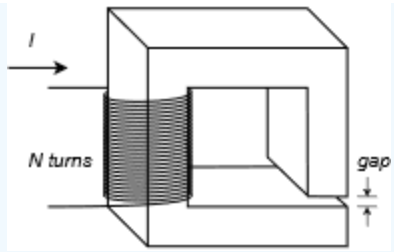

Figure 10.3.14 : Magnetic system for Example 10.3.5 .

The analogous circuit consists of a single source and two reluctances, one for the sheet steel core and a second for the air gap. This is shown in Figure 10.3.12 . Further, the analogous KVL relation is:

$$NI = H_{sheet} l_{sheet} + H_{gap} l_{gap}$$

For this table there will be two rows, one for the sheet steel core and one for the air gap. As we have seen, the flux will be the same in both sections. From there we can fill out some of the other values in the table resulting in:

Section	Flux Φ (Wb)	Area A (m^2)	Flux Density B (T)	Magnetizing Force H (At/m)	Length l (m)	"Drop" Hl (At)
Sheet Steel	1.2E−4	3E−4	0.4	63	8E−2	
Gap	1.2E−4	3E−4	0.4	3.183E5	1E−3	

The BH curve for sheet steel and Definition 10.3.8 for the air gap are used to transition to the right side, yielding:

Section	Flux Φ (Wb)	Area A (m^2)	Flux Density B (T)	Magnetizing Force H (At/m)	Length l (m)	"Drop" Hl (At)
Sheet Steel	1.2E−4	3E−4	0.4	62	8E−2	5.0
Gap	1.2E−4	3E−4	0.4	3.183E5	1E−3	318.3

The Hl "drops" are filled in:

Section	Flux Φ (Wb)	Area A (m^2)	Flux Density B (T)	Magnetizing Force H (At/m)	Length l (m)	"Drop" Hl (At)
Sheet Steel	1.2E−4	3E−4	0.4		8E−2	
Gap	1.2E−4	3E−4	0.4		1E−3	

Using our KVL analogy, the total "drop" is 5.0 At + 318.3 At, or 523.3 ampturns. The coil current was specified as being 400 mA. Therefore:

$$N = \frac{Hl}{I}$$

$$N = \frac{523.3At}{400mA}$$

$$N \approx 1308 \text{ turns}$$

And finally, an example using two coils.

Example 10.3.6

Given the magnetic system shown in Figure 10.3.15 , assume the core is made of sheet steel. The cross section throughout is 3E−4 m^2 and the length of the core is 20 cm. Coil one consists of 2000 turns and coil two consists of 500 turns. If a current of 120 mA into coil one achieves a flux of 2.4E−4 webers, determine the current of coil 2.

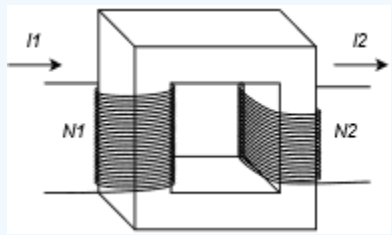

Figure 10.3.15 : Magnetic system for Example 10.3.6 .

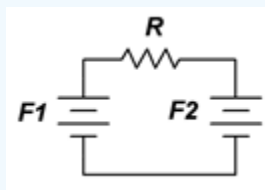

Figure 10.3.16 : Analogous electrical circuit for the system of Figure 10.3.15 .

The analogous circuit consists of two voltage sources and a single reluctance for the sheet steel core. This is illustrated in Figure 10.3.16 .

The analogous KVL relation is:

$$N_1 I_1 - N_2 I_2 = H_{sheet} l_{sheet}$$

As we are seeking I_2, we can rearrange this equation into a more useful form:

$$N_2 I_2 = N_1 I_1 - H_{sheet} l_{sheet}$$

Only one row will be required for this table. We fill out the obvious values in the table resulting in:

Section	Flux Φ (Wb)	Area A (m^2)	Flux Density B (T)	Magnetizing Force H (At/m)	Length l (m)	"Drop" Hl (At)
Sheet Steel	2.4E−4	3E−4	0.8		0.2	

The BH curve for sheet steel is used to transition to the right side:

Section	Flux Φ (Wb)	Area A (m^2)	Flux Density B (T)	Magnetizing Force H (At/m)	Length l (m)	"Drop" Hl (At)
Sheet Steel	2.4E−4	3E−4	0.8	100	0.2	

The Hl "drop" is computed:

Section	Flux Φ (Wb)	Area A (m^2)	Flux Density B (T)	Magnetizing Force H (At/m)	Length l (m)	"Drop" Hl (At)
Sheet Steel	2.4E−4	3E−4	0.8	100	0.2	20

Using our KVL analogy, we find:

$$N_2 I_2 = N_1 I_1 - H_{sheet} l_{sheet}$$

$$N_2 I_2 = 2000 \text{ turns } \times 120mA - 20At$$

$$N_2 I_2 = 240At - 20At$$

$$N_2 I_2 = 220At$$

Coil two was specified as having having 500 turns, therefore its current is:

$$I_2 = \frac{220At}{500turns}$$

$$I_2 = 440mA$$

An item of key importance is that the preceding example must make use of an AC current in order to function as described. A DC current will not produce the predicted results. The reason for this goes back to Definition 10.2.1 and Equation 10.2.2: Unless the flux is changing relative to the conducting coil, no voltage will be induced in a coil. So, while a DC input current will create a flux in the core, that flux will be static and unchanging. Consequently, the second coil will not produce an output. In contrast, an AC current smoothly varies in amplitude and polarity. This creates a smoothly varying magnetic flux which in turn allows a voltage to be induced in the second coil.

Assuming for a moment that an AC current was used in the preceding example, notice that the current is nearly four times higher in coil two than in coil one. If we had been able to reduce the core "drop" to zero, perhaps by reducing the core's reluctance to a negligible value, then the current would have been increased precisely by a factor four (to 480 mA versus 440 mA). This is the same as the ratio of the number of turns of coil one to the number of turns of coil two, and is known as the turns ratio. It is a key parameter describing transformers, which just happens to be the subject of the next section.

References

[1]Curves based on https://en.Wikipedia.org/wiki/Saturation_(magnetic); Steinmetz (1917), Theory and Calculation of Electric Circuits; and Boylestad (2010), Introductory Circuit Analysis.

This page titled 10.3: Magnetic Circuits is shared under a CC BY-NC-SA 4.0 license and was authored, remixed, and/or curated by James M. Fiore via source content that was edited to the style and standards of the LibreTexts platform.

10.4: Transformers

Transformers have been in wide use in the electrical industry for over a century. Beginning with Michael Faraday and working through a sequence of scientists and inventors, the fundamentals of modern transformer design had been established by the late 1800s.

Transformer have three basic uses:

- Voltage scaling.
- Isolation.
- Impedance matching.

Transformers range from very small units used in communications systems up to large power distribution units many times the size of an adult human. A couple of transformers typical of the type used in consumer electronics devices is shown in Figure 10.4.1 . These devices are designed to handle standard residential AC input voltages (120 volts in North America, 220 to 240 volts in much of the remainder of the planet) and feeding circuits that demand perhaps 10 to 30 watts of power. The unit on the left is designed to be mounted directly onto a printed circuit board while the unit on the right is designed for chassis mount.

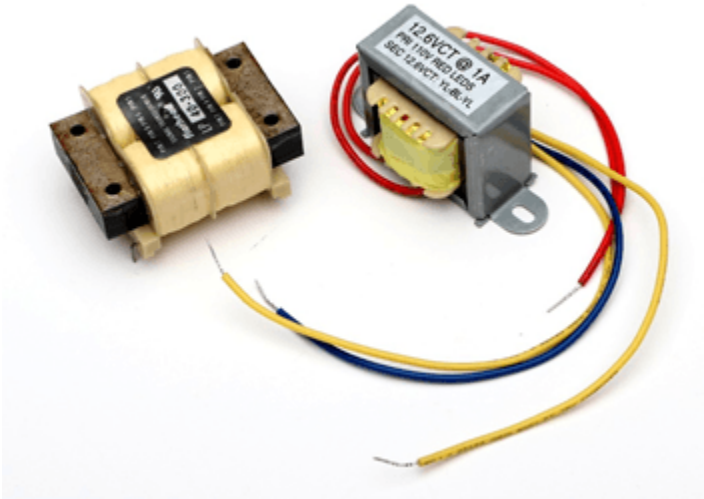

Figure 10.4.1 : Transformers suitable for consumer electronics devices. The unit on the left features four separate coils for enhanced flexibility.

In contrast, Figure 10.4.2 shows pole mounted transformers used to reduce typical North American residential distribution lines (in the vicinity of 15 kV) down to home voltage (120 volts). These transformers are capable of delivering 1000 or more times as much power as the transformers of Figure 10.4.1 . The transformers in these figures by no means present the extremes. Transformers are available that are considerably smaller or larger than the ones pictured here.

Transformers exploit magnetic circuit theory for their operation, as illustrated previously in Example 10.3.6. In its most basic form, the device has two coils or windings; one for the input side (called the primary winding) and one for the output side (the secondary winding). It is possible to have multiple input and/or output windings. Such is the case for the transformer on the left side of Figure 10.4.1 ; it has two input primary coils and two secondary coils. This allows for a variety of interconnection options, as we shall see. A typical schematic symbol is shown in Figure 10.4.3 . This symbol is appropriate for the magnetic system of Figure 10.3.15 which featured two coils. The vertical lines in the symbol represent the magnetic core.

Figure 10.4.2 : A cluster of three residential power transformers.

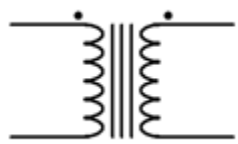

Figure 10.4.3 : Schematic symbol for a simple transformer.

Voltage Scaling and Isolation

A particularly important transformer parameter is the ratio of the number of turns on the primary coil (N_P) to the number of turns on the secondary coil (N_S). This is denoted N, and referred to as the turns ratio.

$$N = \frac{N_P}{N_S} \tag{10.4.1}$$

As the two windings are on the same core and ideally see the same flux, the voltage ratio of the primary to secondary will be equal to N for an ideal lossless transformer. Thus, if $N = 10$ and the primary voltage (V_P) is 60 volts, the secondary voltage (V_S) will be 6 volts. Thus:

$$V_S = \frac{V_P}{N} \tag{10.4.2}$$

The primary and secondary appear as "NI" potentials in the magnetic circuit, therefore, the current will change inversely with N. For example, if $N = 10$ and the primary current is 1 amp, the secondary current will be 10 amps. Thus:

$$I_S = NI_P \tag{10.4.3}$$

It is important to note that the product of primary current and voltage must equal the product of secondary current and voltage for an ideal transformer. Such a device does not dissipate power but rather transforms it (hence the name).

$$V_S I_S = V_P I_P \tag{10.4.4}$$

Real world devices will exhibit some loss due to finite winding wire resistance, nonideal behavior of the magnetic circuit and the like. Instead of a power dissipation rating, power transformers are given a VA (volt-amps) rating, typically thought of as secondary voltage times maximum secondary current. Transformers like the ones pictured in Figure 10.4.1 have ratings in the range of 10 to 30 VA. Generally, the higher the VA rating, the larger and heavier the transformer. On the other hand, applications using signal transformers in communications systems tend to focus on the turns ratio and not on the VA rating as the associated voltages and currents tend to be small. Their goal generally is to increase the amplitude of a signal voltage.

Also, because there is no direct electrical connection between the primary and secondary, the transformer may be used solely for

isolation. This is a safety feature. If $N = 1$, then there is no change in the voltage being presented to the device, ideally.

Example 10.4.1

A microphone feeds a small transformer which is used as the first stage of a preamplifier. The transformer has a primary winding of 50 turns and a secondary winding of 250 turns. Assuming an ideal transformer, determine the output voltage of the transformer if the signal from the microphone is 35 microvolts.

As this is an ideal transformer, the turns ratio indicates how much the input voltage is scaled. First we use Equation 10.4.1 to determine the turns ratio.

$$N = \frac{N_P}{N_S}$$

$$N = \frac{50}{250}$$

$$N = 0.2$$

Now we use Equation 10.4.2 to determine the secondary voltage.

$$V_S = \frac{V_P}{N}$$

$$V_S = \frac{35\mu V}{0.2}$$

$$V_S = 175\mu V$$

Power applications will make use of N to scale the voltage in order to create a more appropriate or efficient level. If the voltage is brought down $(N > 1)$, it is referred to as a step-down transformer. If $N < 1$, it is referred to as a step-up transformer. For example, a consumer electronics product may require a modest DC voltage for its operation, say 15 or 20 volts. To achieve this, the standard North American residential "wall" voltage of 120 volts may be reduced using a step-down transformer with $N = 5$. This would result in a secondary voltage of 24 volts that could then be rectified, filtered, and regulated to the desired DC level. Conversely, a step-up transformer could be used to create a much higher secondary potential (for example, in long distance power transmission to reduce I^2R losses). For some applications, split secondaries or multiple secondaries may be used. A center tap is relatively common and is used to divide the secondary into two equal voltage sections (e.g., a 24 volt center-tapped secondary would behave as two 12 volt secondaries in series). The schematic symbol for a transformer with a centertapped secondary is shown in Figure 10.4.4 .

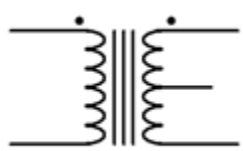

Figure 10.4.4 : Schematic symbol for a transformer with a centertapped secondary.

Multiple secondaries are also common and are more flexible than a center-tapped secondary. Multiple secondaries can be combined in series to increase the secondary voltage or combined in parallel to increase secondary current capacity (i.e, load current).

Example 10.4.2

The power transformer shown in Figure 10.4.5 has turns ratio of 10. If the primary is connected to a 120 volt source and the secondary is connected in series with a 32 Ω load resistor, determine the current through the load resistor. Assume this is an ideal transformer.

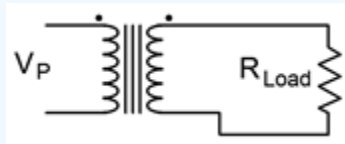

Figure 10.4.5 : Circuit for Example 10.4.2 .

The turns ratio indicates secondary voltage via Equation ???.

$$V_S = \frac{V_P}{N}$$

$$V_S = \frac{120V}{10}$$

$$V_S = 12V$$

Ohm's law can be used to find the secondary current.

$$I_S = \frac{V_S}{R_L}$$

$$I_S = \frac{12V}{32\Omega}$$

$$I_S = 375mA$$

As mentioned earlier, transformers work with AC voltages and currents. Unlike the consistent polarity of DC sources, AC (literally, Alternating Current) flips back and forth in voltage polarity and current direction. In order to determine the phase relationship between the primary and secondary, transformers use “dot notation”. The dot indicates the positive polarity of voltage. This is illustrated in the circuit of Figure 10.4.6 .

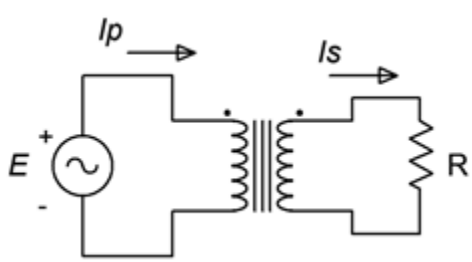

Figure 10.4.6 : Transformer dot convention.

On the primary side, the current flows into the dot and establishes the positive reference. In this case, the primary is seen as the load for the source, E. On the secondary side, current flows out of the dot and also notates the positive reference because the secondary is seen as the source for the load, R.

Impedance Matching

The third use of the transformer is impedance matching. Impedance is an AC phenomenon that consists of both resistance

and reactance (an ohmic value associated with capacitors and inductors). The symbol for impedance is Z. Although impedance is measured in ohms, it differs from ordinary resistance in that it is a vector quantity and has a phase angle. For our present purposes, we can ignore this distinction.[1]

Because both the voltage and current are being scaled, the source's “view” of the load changes. The impedance seen by the source can be defined via Ohm's law as the voltage it produces divided by its output current.

$$Z_P = \frac{V_P}{I_P} \tag{10.4.5}$$

From Equation 10.4.2, we know that $V_P = V_S \cdot N$. Substituting this into Equation 10.4.5 yields:

$$Z_P = \frac{V_S N}{I_P} \tag{10.4.6}$$

From Equation 10.4.3, we know that $I_P = I_S/N$. Substituting this into Equation 10.4.6 yields:

$$Z_P = \frac{V_S N^2}{I_S} \tag{10.4.7}$$

By definition,

$$Z_S = \frac{V_S}{I_S} \tag{10.4.8}$$

Combining Equations 10.4.7 and 10.4.8 leaves us with:

$$Z_P = N^2 Z_S \tag{10.4.9}$$

Thus, the impedance seen by the source is the secondary impedance times the square of the turns ratio. This is called the reflected impedance.

Example 10.4.3

Assume that the transformer shown in Figure 10.4.6 has turns ratio of 5. If the primary is connected to an 20 volt source and the secondary is connected to an 8 Ω load resistor, determine the primary current and the reflected impedance. Assume this is an ideal transformer.

First we'll use Equation 10.4.9 to find the reflected impedance seen in the primary.

$$Z_P = N^2 Z_S$$

$$Z_P = 5^2 \times 8\Omega$$

$$Z_P = 200\Omega$$

Ohm's law can be used to find the primary current.

$$I_P = \frac{V_P}{R_P}$$

$$I_P = \frac{20V}{200\Omega}$$

$$I_P = 100mA$$

Here is where impedance matching comes in. In the preceding example, if the source, E, had a large internal resistance compared to the load resistance, R, and there was no transformer, there would be considerable loss in the system. For example, if the source impedance was 10 Ω and it was directly connected to the 8 Ω load without the transformer, the resulting voltage divider would cause a great deal of internal power dissipation in the source leading to inefficiency. On the other hand, in the given

circuit with transformer, the source sees a reflected impedance of 200 Ω. The resulting voltage divider between 200 Ω and the 10 Ω internal resistance of the source will cause very little loss, yielding a much more efficient transfer.

References

[1]The concept of impedance is covered in great detail in the companion text, AC Electrical Circuit Analysis, another free OER title.

This page titled 10.4: Transformers is shared under a CC BY-NC-SA 4.0 license and was authored, remixed, and/or curated by James M. Fiore via source content that was edited to the style and standards of the LibreTexts platform.

10.5: Summary

This chapter has extended the material presented in Chapter 9 on inductance into the realm of magnetic circuits. We began with the concept of electromagnetic induction, which in simple terms states that if a conductor experiences changing magnetic lines of force, then a voltage will be induced in that conductor. This concept is exploited by an array of different devices including electric motors, generators, relays, loudspeakers, microphones, and other transducers and sensors. For example, dynamic loudspeakers and microphones both make use of a coil of wire suspended in a fixed magnetic field. In the case of the loudspeaker, the signal fed into the coil creates a changing magnetic field that interacts with the permanent magnet's field and causes an attached diaphragm to vibrate against the air, which in turn creates sound. A dynamic microphone works in an opposite manner. Sound waves cause a diaphragm to vibrate back and forth. This diaphragm is attached to a coil, and the motion of the coil within the permanent magnet's field causes a voltage to be induced in the coil. This voltage can then be amplified by electronic circuitry.

Magnetic circuits are constructed by creating one or more coils of wire wrapped around a core that is made of a ferromagnetic material such as steel. A key part of analyzing magnetic circuits is Hopkinson's law (also called Rowland's law), which is the magnetic circuit version of Ohm's law. In this analogy, magnetic flux is likened to current flow, magnetic reluctance stands in for resistance, and magnetomotive force is analogous to electromotive force (i.e., voltage). Further, the magnetomotive force is the product of the number of turns in a coil and the current through said coil, or NI. When current is passed through the coil, a magnetizing force, H, and an associated magnetic flux are created. Given this, the core material will have a corresponding flux density, B. The linkage between B and H is found through a BH curve for that particular material. BH curves are non-linear for ferromagnetic materials. They also exhibit hysteresis, meaning that the recent operational history of the material plays a role in its current state. Every element of the core has a certain reluctance and thus exhibits an analogous “voltage drop”. These “drops” must add up to the NI “rises” of the coil(s), in a KVL analogy.

Transformers use one or more primary coils to transform an input voltage into one more output voltages appearing on secondary coils. The ratio between the number of turns of the primary coil to the number of turns of the secondary coil is called the turns ratio, N. The secondary voltage is equal to the primary voltage divided by N while the secondary current is equal to the primary current times N. If N is greater than one, we have a step-down transformer (reducing the voltage), and if N is less than one, we have a step-up transformer (increasing the voltage). Ideally, transformers do not dissipate power. Thus, they do not have a power rating, but instead have a VA (volt-amps) rating to indicate their capacity. Transformers can also be used for impedance matching to increase the efficiency of a system. The impedance seen by the source on the primary is equal to the secondary impedance times the square of the turns ratio. This is called the reflected impedance.

Review Questions

1. Describe the concept of electromagnetic induction.

2. Describe Ohm's law for magnetic circuits (Hopkinson's or Rowland's law).

3. Describe hysteresis.

4. Define residual magnetism and coercivity.

5. Outline the operation of a relay.

6. What are some of the uses of transformers?

7. What is turns ratio? How does it affect voltage and current in the primary and secondary?

8. What is the difference between a step-up and a step-down transformer?

9. What is reflected impedance?

This page titled 10.5: Summary is shared under a CC BY-NC-SA 4.0 license and was authored, remixed, and/or curated by James M. Fiore via source content that was edited to the style and standards of the LibreTexts platform.

10.6: Exercises

Analysis

1. In the magnetic circuit shown in Figure 10.6.1 , assume the cross section is 1 cm by 1 cm with a path length of 8 cm. The entire core is made of sheet steel and there are 100 turns on the winding. Determine the current to establish a flux of 8E−5 webers.

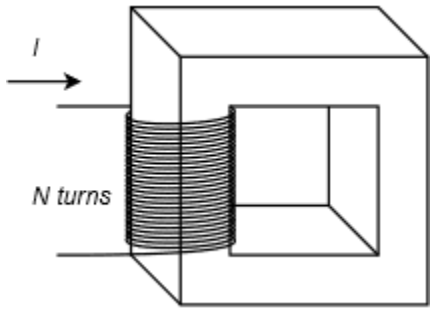

Figure 10.6.1

2. Repeat problem 1 using cast steel for the core.

3. Given the core shown in Figure 10.6.1 , assume the cross section is 2 cm by 2 cm with a path length of 10 cm. The entire core is made of cast steel and there are 200 turns on the winding. Determine the current to establish a flux of 4E−4 webers.

4. Repeat problem 3 using sheet steel for the core.

5. In the magnetic circuit shown in Figure 10.6.1 , assume the cross section is 1 cm by 1 cm with a path length of 8 cm. The entire core is made of sheet steel. Determine the number of turns required to establish a flux of 8E−5 webers given a current of 50 mA.

6. Given the core shown in Figure 10.6.1 , assume the cross section is 2 cm by 2 cm with a path length of 10 cm. The entire core is made of sheet steel Determine the number of turns required to establish a flux of 4E−4 webers given a current of 200 mA.

7. In the magnetic circuit shown in Figure 10.6.2 , assume the cross section is 1 cm by 1 cm. Section A is sheet steel with a path length of 6 cm. Section B is cast steel with a length of 2 cm. There are 500 turns on the winding. Determine the current to establish a flux of 5E−5 webers.

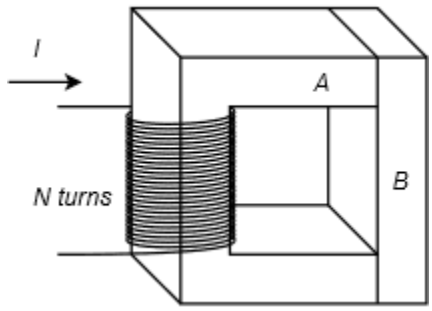

Figure 10.6.2

8. In the magnetic circuit shown in Figure 10.6.2 , assume the cross section is 1 cm by 1 cm. Section A is sheet steel with a path length of 6 cm. Section B is cast steel with a length of 2 cm. Determine the number of turns on the coil to establish a flux of 6E−5 webers with a current of 50 mA.

9. A transformer is shown in Figure 10.6.3 , assume the cross section is 5 cm by 5 cm. The core is sheet steel with a path length of

20 cm. $N1$ is 500 turns and $N2$ is 200 turns. Determine the secondary current $(I2)$ if a primary current $(I1)$ of 1 amp establishes a flux of 1.5E−3 webers.

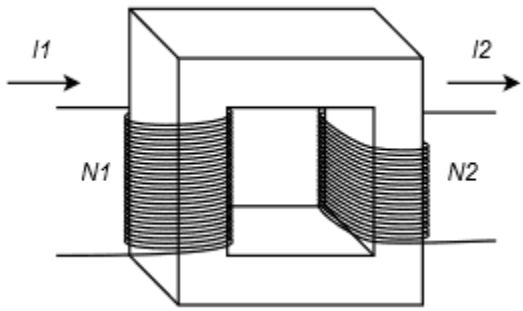

Figure 10.6.3

10. Given the same conditions of problem 9, alter the secondary turns $(N2)$ so that the secondary current $(I2)$ is 3 amps given the original primary current of 1 amp.

11. In general, how would the performance noted in problem 9 change if cast steel was substituted for sheet steel?

12. Given the results of problems 9 through 11, what does the ratio of $N1$ to $N2$ represent in terms of idealized performance, and what steps should be taken to make the transformer operate as close to ideal as possible?

13. Given the magnetic circuit shown in Figure 10.6.4 , assume the cross section is 1 cm by 2 cm with a path length of 6 cm. The entire core is made of sheet steel with the exception of a 1 mm air gap. Determine the current required to establish a flux of 4E−4 webers if $N = 1000$ turns.

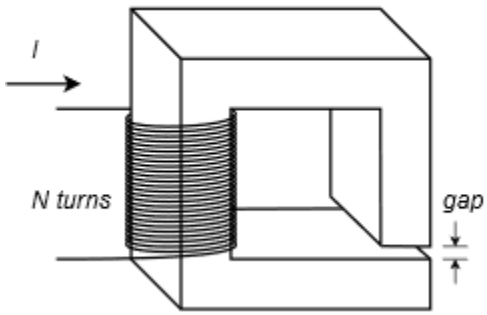

Figure 10.6.4

14. Using the data given in problem 13, determine the number of turns required to establish the same flux when the input current is 200 mA.

15. An ideal transformer has a 6:1 voltage step-down ratio. If the primary is driven by 24 VAC and the load is 100 Ω, determine the load voltage and current, and the primary side current.

16. A 120 VAC transformer is specified as having a 36 volt center-tapped secondary. If each side of the secondary is connected to its own 50 Ω load, determine the load currents and the primary side current.

17. An ideal transformer has a 12:1 voltage step-down ratio. If the secondary is connected to a 10 Ω load, what impedance is seen from the primary side?

18. An ideal transformer has a 1:5 voltage step-up ratio. If the secondary is connected to a 2 Ω load, what impedance is seen from the primary side?

Design

19. A step-down transformer with $N = 8$ has a 15 volt RMS secondary which is connected to a load with an effective value of 5 Ω. Determine the minimum acceptable VA rating of the transformer.

20. A step-up transformer with $N = .5$ is driven from a 120 VAC source. The secondary is connected to a load with an effective value of 150 Ω. Determine the minimum acceptable VA rating of the transformer.

Challenge

21. A transformer specified as having a 120 VAC primary with an 18 volt secondary is accidentally connected backwards, with its secondary connected to the source and its primary connected to a 16 Ω load. Determine the load current in both the normal and reversed connections. Also determine the required transformer VA rating for both connections.

22. Consider the distributed public address system for an airport as shown in Figure 10.6.5 . It consists of an audio power amplifier with a nominal 70 volt RMS output that is connected to four remote loudspeakers, each separate from the others and some 150 meters away from the amplifier. Each loudspeaker assembly includes a 10:1 voltage step-down transformer that feeds the loudspeaker impedance of 8 Ω (resistive) off its secondary. These four lines are fed in parallel by the amplifier. Determine the power delivered to each loudspeaker and the total current delivered by the power amplifier. Assume the transformers are ideal and ignore any cable resistance.

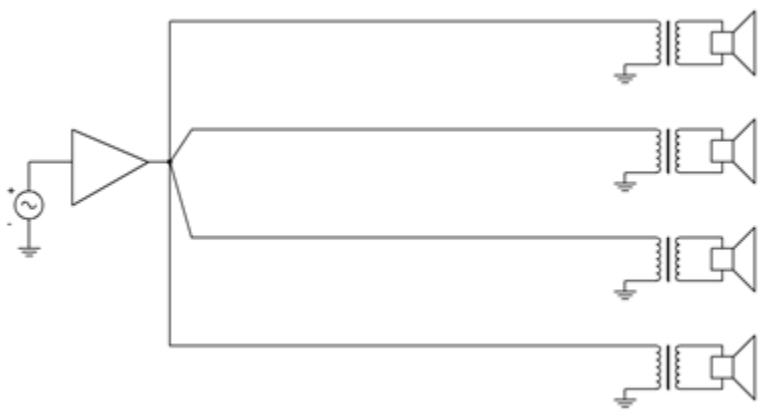

Figure 10.6.5

23. Continuing with the preceding problem, assume that the wiring connecting each transformer back to the amplifier is AWG 22. Determine the power lost in each of the 150 meter long sections of dual cable. Further, suppose the system is reconfigured without the transformers and the output of the amplifier is lowered to 7 volts RMS to compensate. Determine the power lost in each of the cable feeds under the new configuration.

Simulation

24. Use a transient analysis to verify the results of problem 15.

25. Use a transient analysis to verify the results of problem 16.

This page titled 10.6: Exercises is shared under a CC BY-NC-SA 4.0 license and was authored, remixed, and/or curated by James M. Fiore via source content that was edited to the style and standards of the LibreTexts platform.

INDEX

C

cognitive bias
1.6: Critical Thinking

K

Kirchhoff's Current Law
4.4: Kirchhoff's Current Law

M

metric system
1.4: The Metric System

R

RoHS directive
1.7: RoHS

This page titled Index is shared under a CC BY-NC-SA 4.0 license and was authored, remixed, and/or curated by James M. Fiore via source content that was edited to the style and standards of the LibreTexts platform.

GLOSSARY

S

Sample Word 1 | Sample Definition 1

This page titled Glossary is shared under a license and was authored, remixed, and/or curated by LibreTexts.

DETAILED LICENSING

Overview

Title: DC Electrical Circuit Analysis - A Practical Approach (Fiore)

Webpages: 97

Applicable Restrictions: Noncommercial

All licenses found:

- CC BY-NC-SA 4.0: 95.9% (93 pages)
- Undeclared: 4.1% (4 pages)

By Page

- DC Electrical Circuit Analysis - A Practical Approach (Fiore) - *CC BY-NC-SA 4.0*
  - Front Matter - *CC BY-NC-SA 4.0*
    - TitlePage - *CC BY-NC-SA 4.0*
    - InfoPage - *CC BY-NC-SA 4.0*
    - Table of Contents - *Undeclared*
    - Licensing - *Undeclared*
  - 1: Fundamentals - *CC BY-NC-SA 4.0*
    - 1.1: Introduction - *CC BY-NC-SA 4.0*
    - 1.2: Significant Digits and Resolution - *CC BY-NC-SA 4.0*
    - 1.3: Scientific and Engineering Notation - *CC BY-NC-SA 4.0*
    - 1.4: The Metric System - *CC BY-NC-SA 4.0*
    - 1.5: The Scientific Method - *CC BY-NC-SA 4.0*
    - 1.6: Critical Thinking - *CC BY-NC-SA 4.0*
    - 1.7: RoHS - *CC BY-NC-SA 4.0*
    - 1.8: Summary - *CC BY-NC-SA 4.0*
    - 1.9: Exercises - *CC BY-NC-SA 4.0*
  - 2: Basic Quantities - *CC BY-NC-SA 4.0*
    - 2.1: Introduction - *CC BY-NC-SA 4.0*
    - 2.2: An Atomic Model - *CC BY-NC-SA 4.0*
    - 2.3: Charge and Current - *CC BY-NC-SA 4.0*
    - 2.4: Energy and Voltage - *CC BY-NC-SA 4.0*
    - 2.5: Power and Efficiency - *CC BY-NC-SA 4.0*
    - 2.6: Energy Cost and Battery Life - *CC BY-NC-SA 4.0*
    - 2.7: Resistance and Conductance - *CC BY-NC-SA 4.0*
    - 2.8: Instrumentation and Laboratory - *CC BY-NC-SA 4.0*
    - 2.9: Summary - *CC BY-NC-SA 4.0*
    - 2.10: Exercises - *CC BY-NC-SA 4.0*
  - 3: Series Resistive Circuits - *CC BY-NC-SA 4.0*
    - 3.1: Introduction - *CC BY-NC-SA 4.0*
    - 3.2: Conventional Current Flow and Electron Flow - *CC BY-NC-SA 4.0*
    - 3.3: The Series Connection - *CC BY-NC-SA 4.0*
    - 3.4: Combining Series Components - *CC BY-NC-SA 4.0*
    - 3.5: Ohm's Law - *CC BY-NC-SA 4.0*
    - 3.6: Kirchhoff's Voltage Law - *CC BY-NC-SA 4.0*
    - 3.7: Series Analysis - *CC BY-NC-SA 4.0*
    - 3.8: Potentiometers and Rheostats - *CC BY-NC-SA 4.0*
    - 3.9: Summary - *CC BY-NC-SA 4.0*
    - 3.10: Exercises - *CC BY-NC-SA 4.0*
  - 4: Parallel Resistive Circuits - *CC BY-NC-SA 4.0*
    - 4.1: Introduction - *CC BY-NC-SA 4.0*
    - 4.2: The Parallel Connection - *CC BY-NC-SA 4.0*
    - 4.3: Combining Parallel Components - *CC BY-NC-SA 4.0*
    - 4.4: Kirchhoff's Current Law - *CC BY-NC-SA 4.0*
    - 4.5: Parallel Analysis - *CC BY-NC-SA 4.0*
    - 4.6: Current Limiting - Fuses and Circuit Breakers - *CC BY-NC-SA 4.0*
    - 4.7: Summary - *CC BY-NC-SA 4.0*
    - 4.8: Exercises - *CC BY-NC-SA 4.0*
  - 5: Series-Parallel Resistive Circuits - *CC BY-NC-SA 4.0*
    - 5.1: Introduction - *CC BY-NC-SA 4.0*
    - 5.2: Series-Parallel Connections - *CC BY-NC-SA 4.0*
    - 5.3: Simplifying Series-Parallel Components - *CC BY-NC-SA 4.0*
    - 5.4: Series-Parallel Analysis - *CC BY-NC-SA 4.0*
    - 5.5: Summary - *CC BY-NC-SA 4.0*
    - 5.6: Exercises - *CC BY-NC-SA 4.0*
  - 6: Analysis Theorems and Techniques - *CC BY-NC-SA 4.0*
    - 6.1: Introduction - *CC BY-NC-SA 4.0*
    - 6.2: Source Conversions - *CC BY-NC-SA 4.0*
    - 6.3: Superposition Theorem - *CC BY-NC-SA 4.0*
    - 6.4: Thévenin's Theorem - *CC BY-NC-SA 4.0*
    - 6.5: Norton's Theorem - *CC BY-NC-SA 4.0*
    - 6.6: Maximum Power Transfer Theorem - *CC*

BY-NC-SA 4.0
- 6.7: Delta-Y Conversions - *CC BY-NC-SA 4.0*
- 6.8: Summary - *CC BY-NC-SA 4.0*
- 6.9: Exercises - *CC BY-NC-SA 4.0*

- 7: Nodal and Mesh Analysis, Dependent Sources - *CC BY-NC-SA 4.0*
  - 7.1: Introduction - *CC BY-NC-SA 4.0*
  - 7.2: Nodal Analysis - *CC BY-NC-SA 4.0*
  - 7.3: Mesh Analysis - *CC BY-NC-SA 4.0*
  - 7.4: Dependent Sources - *CC BY-NC-SA 4.0*
  - 7.5: Summary - *CC BY-NC-SA 4.0*
  - 7.6: Exercises - *CC BY-NC-SA 4.0*
- 8: Capacitors - *CC BY-NC-SA 4.0*
  - 8.1: Introduction - *CC BY-NC-SA 4.0*
  - 8.2: Capacitance and Capacitors - *CC BY-NC-SA 4.0*
  - 8.3: Initial and Steady-State Analysis of RC Circuits - *CC BY-NC-SA 4.0*
  - 8.4: Transient Response of RC Circuits - *CC BY-NC-SA 4.0*
  - 8.5: Summary - *CC BY-NC-SA 4.0*
  - 8.6: Exercises - *CC BY-NC-SA 4.0*
- 9: Inductors - *CC BY-NC-SA 4.0*
  - 9.1: Introduction - *CC BY-NC-SA 4.0*
  - 9.2: Inductance and Inductors - *CC BY-NC-SA 4.0*
  - 9.3: Initial and Steady-State Analysis of RL Circuits - *CC BY-NC-SA 4.0*
  - 9.4: Initial and Steady-State Analysis of RLC Circuits - *CC BY-NC-SA 4.0*
  - 9.5: Transient Response of RL Circuits - *CC BY-NC-SA 4.0*
  - 9.6: Summary - *CC BY-NC-SA 4.0*
  - 9.7: Exercises - *CC BY-NC-SA 4.0*
- 10: Magnetic Circuits and Transformers - *CC BY-NC-SA 4.0*
  - 10.1: Introduction - *CC BY-NC-SA 4.0*
  - 10.2: Electromagnetic Induction - *CC BY-NC-SA 4.0*
  - 10.3: Magnetic Circuits - *CC BY-NC-SA 4.0*
  - 10.4: Transformers - *CC BY-NC-SA 4.0*
  - 10.5: Summary - *CC BY-NC-SA 4.0*
  - 10.6: Exercises - *CC BY-NC-SA 4.0*
- Back Matter - *CC BY-NC-SA 4.0*
  - Index - *CC BY-NC-SA 4.0*
  - Glossary - *Undeclared*
  - Detailed Licensing - *Undeclared*

This page titled DC Electrical Circuit Analysis - A Practical Approach (Fiore) is shared under a CC BY-NC-SA 4.0 license and was authored, remixed, and/or curated by James M. Fiore via source content that was edited to the style and standards of the LibreTexts platform.